United States
Environmental Protection
Agency

Office of Research
and Development
(8603)

EPA/600/R-93/187
December 1993

Wildlife Exposure Factors Handbook

Volume I of II

ADMIN RECORD

SW-A-005679

EPA/600/R-93/187
December 1993

WILDLIFE EXPOSURE FACTORS HANDBOOK

Volume I of II

Office of Health and Environmental Assessment
Office of Research and Development
U.S. Environmental Protection Agency
Washington, DC 20460

Additional major funding for this Handbook was provided by the
Office of Emergency and Remedial Response,
Office of Solid Waste and Emergency Response
and by the
Office of Science and Technology, Office of Water
U.S. Environmental Protection Agency
Washington, DC 20460

DISCLAIMER

This document has been reviewed in accordance with U.S. Environmental Protection Agency policy and approved for publication. Mention of trade names or commercial products does not constitute endorsement or recommendation for use.

CONTENTS

Foreword xi

Preface xii

Authors, Managers, Contributors, and Reviewers xiii

1. INTRODUCTION 1-1

1.1. PURPOSE AND SCOPE 1-1
1.2. ORGANIZATION OF THE HANDBOOK 1-5
1.3. LIST OF SELECTED SPECIES 1-6
1.4. LIST OF EXPOSURE FACTORS 1-11

1.4.1. Normalizing Factors 1-11

1.4.1.1. Body Weight 1-13
1.4.1.2. Growth Rate 1-13
1.4.1.3. Metabolic Rate 1-14

1.4.2. Contact Rate Factors 1-14

1.4.2.1. Oral Route 1-14
1.4.2.2. Inhalation Route 1-16
1.4.2.3. Dermal Route 1-16

1.4.3. Population Dynamics 1-17

1.4.3.1. Social Organization 1-17
1.4.3.2. Home Range/Territory Size/Foraging Radius 1-17
1.4.3.3. Population Density 1-19
1.4.3.4. Annual Fecundity 1-19
1.4.3.5. Annual Mortality and Longevity 1-19

1.4.4. Seasonal Activities 1-20

1.5. DATA PRESENTATION FORMAT 1-20

1.5.1. Normalizing and Contact Rate Factors 1-21

1.5.1.1. All Animals 1-21
1.5.1.2. Birds 1-22
1.5.1.3. Mammals 1-23
1.5.1.4. Reptiles and Amphibians 1-23

CONTENTS (continued)

1.5.2. Dietary Composition 1-24

1.5.2.1. All Animals 1-24

1.5.3. Population Dynamics 1-25

1.5.3.1. All Animals 1-25
1.5.3.2. Birds 1-26
1.5.3.3. Mammals 1-27
1.5.3.4. Reptiles and Amphibians 1-27

1.5.4. Seasonal Activities 1-28

1.5.4.1. Birds 1-29
1.5.4.2. Mammals 1-29
1.5.4.3. Reptiles and Amphibians 1-29

1.5.5. Abbreviations Used in Tables 1-29

1.6. LITERATURE SEARCH STRATEGY 1-30
1.7. REFERENCES 1-32

2. EXPOSURE FACTORS AND DESCRIPTIONS OF SELECTED SPECIES 2-1

2.1. BIRDS 2-1

2.1.1. Great Blue Heron 2-3
2.1.2. Canada Goose 2-19
2.1.3. Mallard 2-39
2.1.4. Lesser Scaup 2-53
2.1.5. Osprey 2-65
2.1.6. Red-Tailed Hawk 2-79
2.1.7. Bald Eagle 2-91
2.1.8. American Kestrel 2-109
2.1.9. Northern Bobwhite 2-121
2.1.10. American Woodcock 2-137
2.1.11. Spotted Sandpiper 2-149
2.1.12. Herring Gull 2-157
2.1.13. Belted Kingfisher 2-173
2.1.14. Marsh Wren 2-183
2.1.15. American Robin 2-193

CONTENTS (continued)

2.2. MAMMALS 2-207

2.2.1. Short-Tailed Shrew 2-209
2.2.2. Red Fox 2-221
2.2.3. Raccoon 2-233
2.2.4. Mink 2-247
2.2.5. River Otter 2-261
2.2.6. Harbor Seal 2-275
2.2.7. Deer Mouse 2-291
2.2.8. Prairie Vole 2-311
2.2.9. Meadow Vole 2-323
2.2.10. Muskrat 2-337
2.2.11. Eastern Cottontail 2-351

2.3. REPTILES AND AMPHIBIANS 2-365

2.3.1. Snapping Turtle 2-367
2.3.2. Painted Turtle 2-381
2.3.3. Eastern Box Turtle 2-397
2.3.4. Racer 2-407
2.3.5. Northern Water Snake 2-419
2.3.6. Eastern Newt 2-429
2.3.7. Green Frog 2-443
2.3.8. Bullfrog 2-453

3. ALLOMETRIC EQUATIONS 3-1

3.1. FOOD INGESTION RATES 3-3

3.1.1. Birds 3-4
3.1.2. Mammals 3-5
3.1.3. Reptiles and Amphibians 3-6

3.2. WATER INTAKE RATES 3-7

3.2.1. Birds 3-8
3.2.2. Mammals 3-10
3.2.3. Reptiles and Amphibians 3-10

3.3. INHALATION RATES 3-11

3.3.1. Birds 3-11
3.3.2. Mammals 3-12
3.3.3. Reptiles and Amphibians 3-12

CONTENTS (continued)

3.4. SURFACE AREAS 3-13

3.4.1. Birds 3-13
3.4.2. Mammals 3-14
3.4.3. Reptiles and Amphibians 3-14

3.5. ALLOMETRIC EQUATIONS FOR METABOLIC RATE 3-15

3.5.1. Birds 3-18

3.5.1.1 Basal Metabolic Rate 3-19
3.5.1.2. Existence Metabolic Rates 3-20
3.5.1.3. Free-Living Metabolic Rate 3-22
3.5.1.4. Temperature and Metabolic Rate 3-24

3.5.2. Mammals 3-26

3.5.2.1. Basal Metablic Rate 3-26
3.5.2.2. Resting Metabolism 3-27
3.5.2.3. Field Metabolic Rate 3-27
3.5.2.4. Temperature and Metabolic Rate 3-28

3.5.3. Reptiles and Amphibians 3-29

3.5.3.1. Basal and Resting Metabolic Rates 3-29
3.5.3.2. Free-Living Metabolic Rates 3-30

3.6. MATH PRIMER AND UNIT CONVERSIONS 3-32

3.6.1. Summary of Operations Involving Logarithms 3-32
3.6.2. Summary of Operations Involving Powers 3-32
3.6.3. Unit Conversions 3-33

3.6.3.1. Approximate Factors for Metabolic Equations 3-33
3.6.3.2. Exact Conversions 3-33

3.7. ESTIMATING CONFIDENCE INTERVALS 3-34

3.8. REFERENCES 3-38

4. EXPOSURE ESTIMATES 4-1

4.1. GENERAL DOSE EQUATIONS 4-1

4.1.1. Drinking Water 4-3

CONTENTS (continued)

4.1.2. Diet 4-6

4.1.2.1. Dose Equations 4-6
4.1.2.2. Energy Content and Assimilation Efficiencies 4-10

4.1.3. Soil and Sediment Ingestion 4-16

4.1.3.1. Background 4-18
4.1.3.2. Methods 4-18
4.1.3.3. Results 4-19
4.1.3.4. Dose Equations 4-21

4.1.4. Air 4-21
4.1.5. Dermal Exposure 4-23

4.2. ANALYSIS OF UNCERTAINTY 4-23

4.2.1. Natural Variation 4-24
4.2.2. Sampling Uncertainty 4-25
4.2.3. Model Uncertainty 4-26

2 4.3. REFERENCES 4-26

APPENDIX: LITERATURE REVIEW DATABASE ..... See Volume II

LIST OF TABLES

Table 1-1. Characteristics of Selected Birds 1-8

Table 1-2. Characteristics of Selected Mammals 1-9

Table 1-3. Characteristics of Selected Reptiles and Amphibians 1-10

Table 1-4. Wildlife Exposure Factors Included in the Handbook 1-12

Table 1-5. Wildlife Contact Rate Exposure Factors 1-15

Table 1-6. Column Headers for Tables of Normalizing and Contact Rate Factors 1-21

Table 1-7. Column Headers for Tables on Dietary Composition 1-24

Table 1-8. Column Headers for Tables of Factors for Population Dynamics 1-26

Table 1-9. Column Headers for Tables on Seasonal Activities 1-28

Table 2-1. Birds Included in the Handbook 2-2

Tables for 2.1.1. Great Blue Heron 2-8
2.1.2. Canada Goose 2-23
2.1.3. Mallard 2-43
2.1.4. Lesser Scaup 2-56
2.1.5. Osprey 2-68
2.1.6. Red-Tailed Hawk 2-82
2.1.7. Bald Eagle 2-95
2.1.8. American Kestrel 2-112
2.1.9. Northern Bobwhite 2-126
2.1.10. American Woodcock 2-140
2.1.11. Spotted Sandpiper 2-152
2.1.12. Herring Gull 2-162
2.1.13. Belted Kingfisher 2-176
2.1.14. Marsh Wren 2-186
2.1.15. American Robin 2-197

Table 2-2. Mammals Included in the Handbook 2-208

Tables for 2.2.1. Short-Tailed Shrew 2-213
2.2.2. Red Fox 2-224
2.2.3. Raccoon 2-236
2.2.4. Mink 2-251
2.2.5. River Otter 2-264

LIST OF TABLES (continued)

2.2.6. Harbor Seal 2-280
2.2.7. Deer Mouse 2-295
2.2.8. Prairie Vole 2-314
2.2.9. Meadow Vole 2-327
2.2.10. Muskrat 2-340
2.2.11. Eastern Cottontail 2-355

Table 2-3. Reptiles and Amphibians Included in the Handbook 2-366

Tables for 2.3.1. Snapping Turtle 2-370
2.3.2. Painted Turtle 2-386
2.3.3. Eastern Box Turtle 2-400
2.3.4. Racer 2-411
2.3.5. Northern Water Snake 2-423
2.3.6. Eastern Newt 2-433
2.3.7. Green Frog 2-446
2.3.8. Bullfrog 2-456

Table 3-1. Metabolizable Energy (ME) of Various Diets for Birds and Mammals 3-5

Table 3-2. Allometric Equations for Basal Metabolic Rate (BMR) in Birds 3-21

Table 3-3. Regression Statistics for Nagy's (1987) Allometric Equations for Food Ingestion Rates for Free-Living Animals 3-36

Table 3-4. Regression Statistics for Nagy's (1987) Allometric Equations for Free-Living (Field) Metabolic Rates 3-37

Table 4-1. Gross Energy and Water Composition of Wildlife Foods: Animal Prey 4-13

Table 4-2. Energy and Water Composition of Wildlife Foods: Plants 4-14

Table 4-3. General Assimilation Efficiency (AE) Values 4-15

Table 4-4. Percent Soil or Sediment in Diet Estimated From Acid-Insoluble Ash of Scat 4-20

Table 4-5. Other Estimates of Percentage of Soil or Sediment in Diet 4-21

LIST OF FIGURES

Figure 3-1. Monthly Variation in Energy Budget Estimated for a House Sparrow 3-25

Figure 4-1. Wildlife Dose Equations for Drinking Water Exposures 4-4

Figure 4-2. Wildlife Dose Equations for Dietary Exposures 4-6

Figure 4-3. Estimating NIR_k When Dietary Composition Is Known on a Wet-Weight Basis 4-8

Figure 4-4. Estimating NIR_k Based on Different ME Values When Dietary Composition Is Expressed as Percentage of Total Prey Captured 4-9

Figure 4-5. Utilization of Food Energy by Animals 4-11

Figure 4-6. Metabolizable Energy (ME) Equation 4-12

Figure 4-7. Example of Estimating Food Ingestion Rates for Wildlife Species From Free-Living Metabolic Rate and Dietary Composition: Male Mink 4-17

Figure 4-8. Wildlife Oral Dose Equation for Soil or Sediment Ingestion Exposures 4-22

FOREWORD

The Exposure Assessment Group (EAG) of EPA's Office of Research and Development has three main functions: (1) to conduct human health and ecological exposure and risk assessments, (2) to review exposure and risk assessments and related documents, and (3) to develop guidelines and handbooks for use in these assessments. The activities under each of these functions are supported by and respond to the needs of the various program offices, regional offices, and the technical community.

The Wildlife Exposure Factors Handbook was produced in response to the increased interest in assessing risks to ecological systems. Its purpose is to improve exposure assessments for wildlife and support the quantification of risk estimates. It is a companion document to the Exposure Factors Handbook, which contains information useful for quantifying exposure to humans. Because information and methods for estimating exposure are continually improving, we will revise these handbooks as necessary in the future.

Michael A. Callahan
Director
Exposure Assessment Group

PREFACE

The Exposure Assessment Group of the Office of Health and Environmental Assessment (OHEA) has prepared the Wildlife Exposure Handbook in support of the Office of Solid Waste and Emergency Response and the Office of Water. The Handbook provides information on various factors used to assess exposure to wildlife. The goals of the project are (1) to promote the application of risk assessment methods to wildlife species, (2) to foster a consistent approach to wildlife exposure and risk assessments, and (3) to increase the accessibility of the literature applicable to these assessments.

The bulk of the document summarizes literature values for exposure factors for 34 species of birds, mammals, amphibians, and reptiles. In addition, we include a chapter on allometric equations that can be used to estimate some of the exposure factors when data are lacking. Finally, we describe some common equations used to estimate exposure. The basic literature search was completed in May 1990 and was supplemented by targeted searches conducted in 1992.

We anticipate updating this Handbook and would appreciate any assistance in identifying additional sources of information that fill data gaps or otherwise improve the Handbook. Comments can be sent to:

Exposure Assessment Group
Wildlife Exposure Factors Handbook Project
USEPA (8603)
401 M Street, SW
Washington, DC 20460

AUTHORS, MANAGERS, CONTRIBUTORS, AND REVIEWERS

The Exposure Assessment Group (EAG) within EPA's Office of Health and Environmental Assessment (OHEA) was responsible for preparing this document. Additional major contract funding was provided by the Office of Emergency and Remedial Response within the Office of Solid Waste and Emergency Response (OSWER) and by the Office of Science and Technology within the Office of Water. The document was prepared by ICF, Incorporated under contracts 68-C8-0003, 68-W8-0098, 68-DO-0101, and 68-C2-0107. Susan Braen Norton served as the EAG project manager and provided overall direction and coordination of the project. Thanks to Doug Norton for the cover illustration.

AUTHORS

Dr. Margaret McVey
Kimberly Hall, Peter Trenham, Alexander Soast, Leslie Frymier, and Ansara Hirst
ICF, Incorporated

PROJECT MANAGER

Susan Braen Norton
Exposure Assessment Group, Office of Health and Environmental Assessment
Office of Research and Development
U.S. Environmental Protection Agency

TASK MANAGERS

Cynthia Nolt
Office of Science and Technology
Office of Water
U.S. Environmental Protection Agency

Ron Preston
Office of Emergency and Remedial Response
Office of Solid Waste and Emergency Response
U.S. Environmental Protection Agency

CONTRIBUTORS

Dr. Sarah Gerould
Office of Water Quality
U.S. Geological Survey

Dr. Ronald Kirby
Office of Information Transfer
U.S. Fish and Wildlife Service (USFWS)
Department of the Interior

REVIEWERS

Dr. Cynthia Annett, USFWS, Arkansas Cooperative Fish and Wildlife Research Unit, AR
Dr. Richard J. Aulerich, Michigan State University, MI
Dr. Richard Bennett, USEPA, Environmental Research Laboratory (ERL), Corvallis, OR
Dr. Christine A. Bishop, Canadian Wildlife Service, Ontario, Canada
Dr. Brad Bortner, USFWS, Office of Migratory Bird Management, MD
Dr. Steven Bradbury, USEPA, ERL-Duluth, MN
Dr. Robert Burr, USFWS, VA
Ms. Janet Burris, ABB Environmental Services, Washington, DC
Dr. Joseph Chapman, Utah State University, UT
Dr. Lewis Cowardin, USFWS, Northern Prairie Wildlife Research Center, ND
Ms. Deanna Dawson, USFWS, Patuxent Wildlife Research Center, MD
Dr. Donald L. DeAngelis, Oak Ridge National Laboratory, TN
Dr. Bruce Duncan, USEPA, Region 10, Seattle, WA
Dr. Robert Foley, USFWS, Annapolis Field Office, MD
Dr. Glen Fox, Canadian Wildlife Service, Ontario, Canada
Dr. J.H.B. Garner, USEPA, OHEA, Environmental Criteria and Assessment Office (ECAO), Research Triangle Park, NC
Dr. J. Whitfield Gibbons, University of Georgia, Savannah River Ecology Laboratory, GA
Mr. Keith A. Grasman, Virginia Polytechnic Institute and State University, VA
Dr. Fred Guthery, Caesar Kleberg Wildlife Research Institute, Texas A&I University, TX
Dr. Richard S. Halbrook, Oak Ridge National Laboratory, TN
Dr. Michael J. Hamas, Central Michigan University, MI
Dr. Charles J. Henny, USFWS, Pacific Northwest Research Station, OR
Dr. Paula F. P. Henry, USFWS, Patuxent Wildlife Research Center, MD
Dr. Gary Heinz, USFWS, Patuxent Wildlife Research Center, MD
Dr. Doug James, University of Arkansas, AR
Mr. K. Bruce Jones, USEPA, Environmental Monitoring Systems Laboratory, EMAP Terrestrial Ecosystems, CA
Dr. Dennis G. Jorde, USFWS, Patuxent Wildlife Research Center, MD
Dr. Norm Kowal, USEPA, OHEA, ECAO, Cincinnati, OH
Dr. Gary L. Krapu, USFWS, Northern Prairie Wildlife Research Center, ND
Dr. David Krementz, USFWS, Patuxent Wildlife Research Center, MD
Dr. James Kushlan, University of Mississippi, MS
Dr. John T. Lokemoen, USFWS, Northern Prairie Wildlife Research Center, ND
Dr. Dave Ludwig, EA Engineering, Inc., MD
Dr. Drew Major, USFWS, Concord, NH
Dr. Karen McBee, Oklahoma State University, OK

REVIEWERS (continued)

Dr. Linda Meyers-Schöne, International Technology Corp., NM
Mr. Jerry Moore, USEPA, OHEA, Washington, DC
Dr. Lewis Oring, University of Nevada at Reno, NV
Dr. Raymond Pierotti, University of Arkansas, AR
Dr. Richard M. Poché, Genesis Laboratories, WI
Dr. Douglas Reagan, Woodward-Clyde Consultants, CO
Dr. Lorenz Rhomberg, USEPA, OHEA, Human Health Assessment Group, Washington, DC
Dr. Robert Ringer, Mount Dora, FL
Dr. John L. Roseberry, Southern Illinois University at Carbondale, IL
Dr. Alan Sargeant, USFWS, Northern Prairie Wildlife Research Center, ND
Dr. Edward Schafer, USDA, Denver Wildlife Research Center, CO
Dr. Laird Schutt, Canadian Wildlife Service, Quebec, Canada
Ms. Anne Sergeant, USEPA, OHEA, EAG, Washington, DC
Dr. Kim Smith, University of Arkansas, AR
Dr. Mark Sprenger, USEPA, OSWER, Environmental Response Team, Edison, NJ
Dr. George A. Swanson, USFWS, Northern Prairie Wildlife Research Center, ND
Dr. Sylvia Talmage, Oak Ridge National Laboratory, TN
Dr. Bob Trost, USFWS, Office of Migratory Bird Management, MD
Dr. D.V. (Chip) Weseloh, Canadian Wildlife Service, Ontario, Canada
Dr. Nathaniel Wheelwright, Bowdoin College, ME
Dr. Donald H. White, USFWS, Southeast Research Station, GA
Dr. Stanley N. Wiemeyer, USFWS, Patuxent Wildlife Research Center, MD
Dr. Bill Williams, Environmental Planning and Toxicology, Corvallis, OR
Dr. Dean M. Wilkinson, U.S. Department of Commerce, National Oceanic and Atmospheric Administration, National Marine Fisheries Service
Dr. Jerry O. Wolff, USEPA, ERL, Corvallis, OR
Dr. John P. Wolfin, USFWS, Annapolis Field Station, MD

1. INTRODUCTION

The Wildlife Exposure Factors Handbook (hereafter referred to as the Handbook) provides data, references, and guidance for conducting exposure assessments for wildlife species exposed to toxic chemicals in their environment. It is the product of a joint effort by EPA's Office of Research and Development (ORD), Office of Solid Waste and Emergency Response (OSWER), and Office of Water (OW). The goals of this Handbook are (1) to promote the application of risk assessment methods to wildlife species, (2) to foster a consistent approach to wildlife exposure and risk assessments, and (3) to increase the accessibility of the literature applicable to these assessments.

1.1. PURPOSE AND SCOPE

The purpose of the Handbook is to provide a convenient source of information and an analytic framework for screening-level risk assessments for common wildlife species. These screening-level risk assessments may be used for several purposes, including: to assess potential effects of environmental contamination on wildlife species and to support site-specific decisions (e.g., for hazardous waste sites); to support the development of water-quality or other media-specific criteria for limiting environmental levels of toxic substances to protect wildlife species; or to focus research and monitoring efforts. The Handbook provides data (analogous to EPA's *Exposure Factors Handbook* for humans, USEPA, 1989c) and methods for estimating wildlife intakes or doses of environmental contaminants. Although the data presented in the Handbook can be used for screening analyses, we recommend that anyone establishing a cleanup goal or criterion on the basis of values contained herein *obtain the original literature on which the values are based to confirm that the study quality is sufficient to support the criterion.* This Handbook does not include data or extrapolation methods required to assess the toxicity of substances to wildlife species, nor does it include any chemical-specific data (e.g., bioavailability factors).

For the Office of Water, data gathered for the Handbook were used to identify wildlife species that are likely to be at greater risk from bioaccumulative pollutants in surface waters and to estimate likely exposures for these species. Data on diets and on

food and water ingestion rates can be used with chemical-specific information, such as bioaccumulation potential and wildlife toxicity, to calculate site- or region-specific concentrations of a chemical in water (or soil or sediment) that are unlikely to cause adverse effects.

For the Superfund program, this Handbook supplements the existing environmental evaluation guidance. EPA's *Risk Assessment Guidance for Superfund: Volume II--Environmental Evaluation Manual* (U.S. EPA, 1989a) provides an overview of ecological assessment in the Superfund process. It includes a description of the statutory and regulatory bases for ecological assessments in Superfund and fundamental concepts for understanding ecological effects of environmental contaminants. The *Environmental Evaluation Manual* also reviews elements of planning an ecological assessment and how to organize and present the results of the assessment. EPA's *Ecological Assessment of Hazardous Waste Sites: A Field and Laboratory Reference* (U.S. EPA, 1989b) and *Evaluation of Terrestrial Indicators for Use in Ecological Assessments at Hazardous Waste Sites* (U.S. EPA, 1992) are companion documents that describe biological assessment strategies, field sampling designs, toxicity tests, biomarkers, biological field assessments, and data interpretation. The *ECO Update* intermittent bulletin series (published by EPA's Office of Solid Waste and Emergency Response, publication no. 9345.0-05I, available from the National Technical Information Service, Springfield, Virginia) provides supplemental guidance for Superfund on selected issues. Although these documents have identified decreases in wildlife populations as potential endpoints for ecological assessments, they do not provide guidance on how to conduct a wildlife exposure assessment that is comparable to the guidance provided by the Superfund program for human health exposure assessments. This Handbook provides both guidance and data to facilitate estimating wildlife exposure to contaminants in the environment.

Exposure assessments for wildlife and humans differ in several important ways. One key distinction is that many different wildlife species may be exposed, as compared with a single species of concern for a human health assessment. Exposure varies between different species and even between different populations of the same species; behavioral attributes and diet and habitat preferences influence this variation. Second, whereas it is

seldom possible to confirm estimated levels of human exposure without invasive sampling of human tissues, confirmatory sampling for many chemicals can be done in wildlife species (protected species excepted). However, the tissue sampling required to quantify actual exposure levels can be costly, and interpretation of tissue concentrations can be complex.

For both human health and wildlife exposure assessments, the most cost-effective approach is often to first screen for potentially significant exposures using measures (or estimates) of environmental contamination (e.g., in soils, water, prey species) to estimate contaminant intakes or doses by significant routes of exposure. If estimated doses fall far below the toxicity values associated with adverse effects, especially from chronic exposures, further assessment may be unnecessary. If estimated doses far exceed reference toxicity values, it may be possible to determine appropriate actions on the basis of these estimates alone. When a screening-level exposure assessment indicates that adverse effects are likely, additional confirmatory data may be needed in the decision-making process. For humans, it is usually not practicable to obtain additional types of data (e.g., tissue concentrations, biomarkers), and human exposure estimates are often refined by using more site-specific data for exposure parameters. For wildlife, confirmatory data may be obtained from chemical analyses of tissue samples from potentially exposed wildlife or their prey and from observed incidence of disease, reproductive failure, or death in exposed wildlife. These are reviewed in EPA's field and laboratory reference and terrestrial indicators documents described above (EPA, 1989b, 1992). If this more direct approach is not possible, the exposure analysis can be refined on the basis of more site-specific data for the species of concern.

Wildlife can be exposed to environmental contaminants through inhalation, dermal contact with contaminated water or soil, or ingestion of contaminated food, water, or soil. Exposure assessment seeks to answer several questions, including:

- What organisms are actually or potentially exposed to contaminants?

- Which organisms or life stages might be most vulnerable to environmental contaminants (e.g., ingest the largest quantities of contaminated media relative to body size)?
- What are the significant routes of exposure?
- To what amounts of each contaminant are organisms actually or potentially exposed?
- How long is each exposure?
- How often does or will exposure to the environmental contaminants take place?
- What seasonal and climatic variations in conditions are likely to affect exposure?
- What are the site-specific geophysical, physical, and chemical conditions affecting exposure?

The parameters for which data are presented in the Handbook are intended to help a risk assessor answer these questions. The population parameter data (e.g., birth and death rates) may be useful for placing estimates of risks to wildlife populations in a broader ecological context and for planning monitoring activities.

This Handbook focuses on selected groups of mammals, birds, amphibians, and reptiles. Fish and aquatic or terrestrial invertebrates were not included in this effort. The profiles on amphibians and reptiles are, in general, less developed than those for birds and mammals. We emphasized birds and mammals because methods for assessing their exposure are more common and well developed. As more assessments are done for amphibians and reptiles, we anticipate that additional methods and supporting factors will be necessary. Until then, we hope the information presented here will encourage assessors to begin considering and quantifying their exposure.

For all exposure parameters and species in the Handbook, we try to present data indicative of the range of values that different populations of a species may assume across North America. For site-specific ecological risk assessments, it is important to note that the values for exposure factors presented in this Handbook may not accurately represent

specific local populations. The species included in the Handbook have broad geographic ranges, and they may exhibit different values for many of the exposure factors in different portions of their range. Some species exhibit geographic variation in body size, survival, and reproduction. Breeding and migration also influence exposure. Site-specific values for these parameters can be determined more accurately using published studies of local populations and assistance from the U.S. Fish and Wildlife Service, state departments of fish and game, and organizations such as local Audubon Society chapters. In addition, The Nature Conservancy develops and maintains wildlife databases (including endangered species) in cooperation with all 50 states. Local information increases the certainty of a risk assessment. Thus, for site-specific assessments, we strongly recommend contacting local wildlife experts to determine the presence and characteristics of species of concern.

Finally, we do not intend to imply that risk assessments for wildlife should be restricted to the species described in this Handbook, or should always be conducted for these species. We emphasize that locally important or rare species not included in this Handbook may still be very important for site-specific risk assessments. To assist users who wish to evaluate other species, we list general references for birds, mammals, reptiles, and amphibians in North America. The Handbook also provides allometric equations to assist in extrapolating exposure factors (e.g., water ingestion rate, surface area) to closely related species on the basis of body size.

1.2. ORGANIZATION OF THE HANDBOOK

The Handbook is organized into four chapters. The remainder of this chapter provides an overview of the species and exposure factors included in the Handbook and discusses the literature search strategy used to identify factors. Chapter 2 presents exposure profiles for the selected species (described in greater detail below). Chapter 3 provides allometric models that may be used to estimate food and water ingestion rates, inhalation rates, surface areas, and metabolic rates for wildlife species on the basis of body size. Chapter 4 describes common equations used to estimate wildlife exposure to environmental contaminants. Included are methods for estimating diet-specific food

ingestion rates on the basis of metabolic rate and for estimating exposure to chemicals in soil and sediment.

Chapter 2 is the core of the Handbook; it presents exposure profiles for selected birds (Section 2.1), mammals (Section 2.2), and reptiles and amphibians (Section 2.3), along with brief descriptions of their natural history. Each species profile includes an introduction to the species' general taxonomic group, qualitative description of the species, list of similar species, table of exposure factors, and reference list (which also covers that species' section in Volume II, the Appendix). The values included in the exposure factors tables are a subset of those we found in the literature and also include values that we estimated using the allometric equations presented in Chapter 3. We selected values for the tables in Chapter 2 based on a variety of factors including sample size, quantification of variability (e.g., standard deviations, standard errors, ranges), relevance of the measurement technique for exposure assessment, and coverage of habitats, subspecies, and the variability seen in the literature. A complete listing of the parameter values identified in our literature survey is provided in the Appendix. The Appendix also includes more details concerning sample size, methods, and qualifying information than the species profiles. Users are encouraged to consult the Appendix to select the most appropriate values for their particular assessment.

The remainder of this introductory chapter describes the species and exposure factors covered in the Handbook in greater detail. The literature search strategy is discussed in Section 1.6.

1.3. LIST OF SELECTED SPECIES

Wildlife species were selected for the Handbook to provide several types of coverage:

- Major taxonomic groups (major vertebrate groups, orders, and families);
- A range of diets (e.g., piscivore, probing insectivore) likely to result in contact with contaminated environmental media;

- A variety of habitat types (e.g., fields, marshes, woodlands, coastal areas); and
- Small to large body sizes.

Other attributes also were considered when selecting species for the Handbook, including:

- Species with wide geographic distribution within the United States (or replaced regionally by similar species);
- Species of concern to EPA or other regulatory agencies (managed by state or Federal agencies); and
- Species of societal significance (familiar or of concern to most people).

Tables 1-1, 1-2, and 1-3 list the birds, mammals, and reptiles and amphibians, respectively, included in the Handbook. The species are listed according to diet, general foraging habitat, and relative body size.

The species included in this Handbook were necessarily limited; *however, we do not recommend limiting wildlife exposure assessments to the species or similar species identified in the Handbook.* Instead, the Handbook should be used as a framework to guide development of exposure factors and assessments for species of concern in a risk assessment. Species selection criteria for site-specific risk assessments might include the following considerations:

- Species that play important roles in community structure or function (e.g., top predators or major herbivores);
- Diet, habitat preferences, and behaviors that make the species likely to contact the stressor;
- Species from different taxa that might exhibit different toxic effects from contaminants;
- Local species that are of concern to Federal and state regulatory agencies (e.g., endangered and threatened species);

Table 1-1. Characteristics of Selected Birds

Diet	General Foraging Habitat	Body Size	Selected Bird Species
Insectivore[a]			
probing/soil-dwelling invertebrates	woodlands, marshes	medium	American woodcock
gleaning/insects	marshes	small	marsh wren
Herbivore			
gleaning/seeds	woodlands, fields and brush	medium	northern bobwhite
grazing/shoots	open fields	large	Canada goose
Omnivore	open woodland, suburbs	small	American robin
Carnivore[b]	open fields, forest edge	medium	American kestrel
	most open areas	medium	red-tailed hawk
Carnivore/Piscivore/Scavenger			
small birds & mammals/fish/dead fish	open water bodies	large	bald eagle
fish/invertebrates/small birds/garbage	Great Lakes and coastal	medium	herring gull
Piscivore[c]	most streams, rivers, small lakes	medium	belted kingfisher
	most freshwater and saltwater bodies	large	great blue heron
	large water bodies	large	osprey
Aquatic Insectivore[d]			
probing/soil-dwelling invertebrates	most rivers and streams	small	spotted sandpiper
diving/aquatic invertebrates	oceans and coastal areas	medium	lesser scaup
Aquatic Herbivore/Insectivore	most wetlands, ponds	medium	mallard

[a]Includes consumption of insects, other arthropods, worms, and other terrestrial invertebrates.
[b]Includes consumption of terrestrial vertebrates and large invertebrates.
[c]Includes consumption of fish, amphibians, crustaceans, and other larger aquatic animals.
[d]Includes consumption of aquatic invertebrates and amphibian larvae by gleaning or probing.

Table 1-2. Characteristics of Selected Mammals

Diet	General Foraging Habitat	Body Size	Selected Mammal Species
Insectivore[a] gleaning/surface-dwelling invertebrates	most habitat types	small	short-tailed shrew
Herbivore gleaning/seeds grazing or browsing/shoots, roots, or leaves	most dry-land habitats grassy fields, marshes, bogs prairie grass communities most habitat types	small small small medium	deer mouse meadow vole prairie vole eastern cottontail
Omnivore	woodlands, suburbs mixed woodlands and open areas	medium medium	raccoon red fox
Carnivore[b]	most areas near water	medium	mink
Piscivore[c]	rivers coastal, estuaries, lakes	medium medium	river otter harbor seal
Aquatic Herbivore	most aquatic habitats	medium	muskrat

[a]Includes consumption of insects, other arthropods, worms, and other terrestrial invertebrates.
[b]Includes consumption of aquatic and terrestrial vertebrates and large invertebrates.
[c]Includes consumption of fish, amphibians, crustaceans, molluscs, and other large aquatic animals.

Table 1-3. Characteristics of Selected Reptiles and Amphibians

Adult Diet	General Foraging Habitat for Adults	Body Size	Selected Reptile or Amphibian Species
REPTILES			
Terrestrial Carnivore[a]	open woods, fields and brush	medium	racer
Aquatic Piscivore[b]	most types of water bodies	medium	northern water snake
Omnivore	open fields, forest edge, marshes most freshwater bodies	medium large	eastern box turtle snapping turtle
Aquatic Herbivore	most wetlands, ponds	medium	painted turtle
AMPHIBIANS			
Insectivore[c]	shallow freshwater bodies	small	green frog
Aquatic Piscivore/Insectivore[d]	lakes, ponds, bogs, streams small lakes, ponds, streams	medium small	bullfrog eastern newt

[a]Includes consumption of terrestrial vertebrates and invertebrates, insects, other arthropods, worms, and other terrestrial invertebrates.
[b]Includes consumption of fish, amphibians, and crustaceans.
[c]Includes consumption of insects, other arthropods, worms, and other terrestrial invertebrates.
[d]Includes consumption of fish, amphibians, crustaceans, molluscs, other aquatic animals, and terrestrial insects and other invertebrates.

- Species of societal significance or concern (e.g., game species, familiar species); and
- Species that have been shown to be particularly sensitive to the stressor being addressed.

When species of concern for a risk assessment include species for which data are presented in this Handbook, it can serve as a readily available source of data for screening-level exposure analyses.

1.4. LIST OF EXPOSURE FACTORS

Three routes of exposure may be of concern for wildlife in the vicinity of contaminated surface waters and terrestrial habitats: oral, inhalation, and dermal. Oral exposures might occur via ingestion of contaminated food (e.g., aquatic prey) or water or incidental ingestion of contaminated media (e.g., soils, sediments) during foraging or other activities. Inhalation of gases or particulates might be a significant route of exposure for some animals. Dermal exposures are likely to be most significant for burrowing mammals (i.e., via contact with contaminated soils) and animals that spend considerable amounts of time submerged in surface waters. This Handbook tabulates selected data for all three routes of exposure (Table 1-4), emphasizing oral exposures. It also provides quantitative information on population parameters and qualitative information related to seasonal activities, geographic ranges, habitats, and other life-history characteristics.

The exposure factors presented in the Handbook are conceptually separated into four types: normalizing factors (Section 1.4.1), contact rates (Section 1.4.2), population dynamics (Section 1.4.3), and seasonal activities (Section 1.4.4). Section 1.5 describes the format in which values for these exposure factors are presented in Chapter 2.

1.4.1. Normalizing Factors

Normalizing factors include body weight, growth rate, and metabolic rate, which are discussed in turn below.

Table 1-4. Wildlife Exposure Factors Included in the Handbook

Parameter Type	Exposure Route/ Factor Category	Factor
NORMALIZING FACTORS	Body Weight	body weight
		growth rate
	Metabolic Rate	metabolic rate
CONTACT RATES	Oral	food ingestion rate
		dietary composition
		water ingestion rate
		soil/sediment intake rate
	Inhalation	inhalation rate
	Dermal	surface area
POPULATION DYNAMICS	Distribution (by life stage and season)	social organization
		home range size
		population density
	Birth, Maturation, and Death Rates	annual fecundity
		age at sexual maturity
		annual mortality rates
		average longevity
SEASONAL ACTIVITIES	Timing of Activities (those that can modify habitat preferences and exposure)	mating season
		parturition/hatching
		molt/metamorphosis
		dispersal/migration/ hibernation

1.4.1.1. Body Weight

Body weights (in units of mass) are reported as fresh weight as might be obtained by weighing a live animal in the field. Several of the contact rate parameters are normalized to body weight. For example, both food and water ingestion rates are reported on a per body weight basis (e.g., gram of fresh food or water per gram of fresh body weight per day). Using empirical models, body weight data also were used to estimate contact rate parameters for which we could not find measured values.

Adult body weights are listed for all species. For birds, we also provide egg weight, weight at hatching, nestling or chick weights, and weight at fledging, when available, to assist risk assessors concerned with estimating exposures of embryos and young birds. For mammals, we also provide gestating female weight, birth weight, pup weights at various ages, weight at weaning, and weight at sexual maturity, when available, for a similar purpose. Finally, for reptiles and amphibians, we also provide egg weight, larval or juvenile weights with age, and weight at metamorphosis, if available and applicable. Body size for reptiles and amphibians is often reported as body length instead of body weight, so we also provide data on body length and the relationship between body length and body weight, when available.

1.4.1.2. Growth Rate

Young animals generally consume more food (per unit body weight) than adults because they grow and develop rapidly. Growth rates change as animals mature, whether expressed as absolute (g/day) or relative (percent body weight) terms. Weight gain is rapid after birth, but slows over time. Different types of animals exhibit different patterns of growth over time. Plots of body weight versus age for some animal groups are sigmoidal whereas others may approximate logistic functions or other shapes. As a result, investigators often report growth rates as various constants associated with particular mathematical models (e.g., Gompertz equation, von Bertalanffy equation; see Peters, 1983) that fit the growth pattern for a given species. Instead of presenting a variety of growth constants and models, however, we report growth rates for young animals, when available,

in grams per day for specific age groups. Growth rates also can be inferred from a series of juvenile body weights with age. These measures are included under body weight (see Section 1.4.1.1).

1.4.1.3. Metabolic Rate

Metabolic rate is reported on the basis of kilocalories per day normalized to body weight (e.g., kcal/kg-day). If metabolic rate was measured and reported on the basis of oxygen consumption only, we provide those values as liters O_2/kg-day. Normalized metabolic rates based on kilocalories can be used to estimate normalized food ingestion rates (see Section 4.1.2). Metabolic rates based on oxygen consumption can be used to estimate metabolic rates based on kilocalories for subsequent use in estimating food ingestion rates (see Section 3.6.3.1).

1.4.2. Contact Rate Factors

Table 1-5 summarizes the six contact rate factors included for the oral, inhalation, and dermal routes of exposure.

1.4.2.1. Oral Route

Three environmental media are the primary contributors to wildlife exposure by the oral route: food, water, and soils and sediments. Four contact rate exposure parameters related to these three exposure media are discussed below.

1.4.2.1.1. Food ingestion rates. Food ingestion rates are expressed in this Handbook as grams of food (wet weight) per gram of body weight (wet weight) per day (g/g-day). Food ingestion rates can vary by age, size, and sex and by seasonal changes in ambient temperature, activity levels, reproductive activities, and the type of diet consumed. Food ingestion rates have not been measured for many wildlife species. Methods for estimating food ingestion rates on the basis of free-living (or field) metabolic rate, energy content of the diet, and assimilation efficiency are discussed in Section 4.1.2.

Table 1-5. Wildlife Contact Rate Exposure Factors

Exposure Route	Medium	Factor	Expression	Units
ORAL	Food	ingestion rate	fraction body weight	6 g/g-day
		dietary composition	fraction of total intake represented by each food type	
	Water	ingestion rate	fraction body weight	g/g-day
	Soil/Sediment	intake rate	fraction of total food intake	g/g-day
INHALATION	Vapor or Particulates	inhalation rate	daily volume	m^3/day
DERMAL	Water or Soil/Sediment	surface area	total area potentially exposed[a]	cm^2

[a]Total unprotected or permeable surface area that might be exposed under some circumstances (e.g., dust bathing), even though it would not be exposed under other conditions (e.g., swimming with a trapped air layer between the feathers or fur and skin).

1.4.2.1.2. Dietary composition. Dietary composition varies seasonally and by age, size, reproductive status, and habitat. Dietary composition (e.g., proportion of diet consisting of various plant or animal materials), often measured by stomach-content analyses, is expressed whenever possible as percentage of total intake on a wet-weight basis. This convention facilitates comparison with contaminant concentrations in dietary items reported on a wet-weight basis. Methods for converting other measures of dietary composition (e.g., percentage of total prey items captured, proportion of intake on a dry-weight basis) to estimates of dietary intake on a wet-weight basis are provided in Section 4.1.2.

1.4.2.1.3. Water ingestion rates. For drinking-water exposures, ingestion rates are expressed in this Handbook as grams of water per gram of wet body weight per day (g/g-day). Water consumption rates depend on body weight, physiological adaptations,

diet, temperature, and activity levels. It is important to remember that, under some conditions, some species can meet their water requirements with only the water contained in the diet and metabolic water production (see Section 3.2).

1.4.2.1.4. Incidental soil and sediment intakes. Wildlife can incidentally ingest soils or sediments while foraging or during other activities such as dust bathing and preening or grooming. Data quantifying soil and sediment ingestion are limited; we present available values for selected species in Section 4.1.3.

1.4.2.2. Inhalation Route

Average daily inhalation rates are reported in the Handbook in units of m^3/day. Inhalation rates vary with size, seasonal activity levels, ambient temperature, and daily activities. EPA's current approach to calculating inhalation exposures requires additional information on species' respiratory physiology to fully estimate inhalation exposures (see Section 4.1.4).

1.4.2.3. Dermal Route

Dermal contact with contaminated soil, sediment, or water is likely to be an exposure pathway for some wildlife species. An animal's surface area could be used to estimate the potential for uptake of contaminants through its skin. For some exposures (e.g., dust bathing), the entire surface area of the animal might be important. For other types (e.g., swimming), only the uninsulated portions (e.g., no fur or feathers that create a trapped air layer) of the animal might contact the contaminated medium. In the Handbook, we provide measures or estimates of the entire potentially exposed surface area of an animal, when possible. We have not attempted to determine what portions would be exposed and protected for swimming animals.

1.4.3. Population Dynamics

Several parameters can be used to describe the spatial distribution and abundance of a population of animals in relation to the spatial extent of contamination. Three parameters related to spatial distribution are social organization, home-range size, and population density. These are important for estimating the number of individuals or proportion of a population that might be exposed to a contaminated area. Parameters related to population size and persistence include age at sexual maturity and maturation, mortality, and annual fecundity rates. These parameters may be useful to assessors planning or evaluating field studies or monitoring programs.

1.4.3.1. Social Organization

The Handbook includes a qualitative description of each species' social organization, which influences how animals of various ages and sizes are distributed in space. In some species, individual home ranges do not overlap. In others, all individuals use the same home range. In between these extremes, home ranges can be shared with mates, offspring, or extended family groups.

Social organization can vary substantially among species that appear otherwise similar; therefore, it is not possible to extrapolate the social organization of similar species from the selected species in this Handbook. Consult the general bibliographies for information sources to determine the social organization of species not covered in the Handbook.

1.4.3.2. Home Range/Territory Size/Foraging Radius

Home range size can be used to determine the proportion of time that an individual animal is expected to contact contaminated environmental media. Home range is defined as the geographic area encompassed by an animal's activities (except migration) over a specified time. While home range values often are expressed in units of area, for species dependent on riparian or coastal habitats, a more meaningful measure can be foraging

radius, or the distances the animals are willing to travel to potential food sources. Although home ranges may be roughly circular in homogeneous habitats, it is important to remember that depending on habitat needs and conditions, home ranges may be irregular in shape. The size and spatial attributes of a home range often are defined by foraging activities, but also might depend on the location of specific resources such as dens or nest sites in other areas. An animal might not visit all areas of its home range every day or even every week, but over longer time periods, it can be expected to visit most of the areas within the home range that contain needed resources such as forage, prey, or protected resting areas.

Home range size for individuals within a population can vary with season, latitude, or altitude as a consequence of changes in the distribution and abundance of food or other resources. It generally varies with animal body size and age because of differences in the distribution of preferred forage or prey. It can also depend on habitat quality, increasing as habitat quality decreases to a condition beyond which the habitat does not sustain even sparse populations. Finally, home ranges can vary by sex and season. For example, if a female is responsible for most or all of the feeding of young, her foraging range might be restricted to an area close to her nest or den when she has dependent young, whereas the foraging range of males would not be so restricted.

Nonterritorial species may allow significant overlap of activity areas among neighboring individuals or groups. For example, several individuals or mated pairs may share the same area, although signalling behaviors may ensure temporal segregation. For these species, we report a home range size or foraging radius. Other species are strongly territorial and defend mutually exclusive areas: individuals, breeding pairs, or family units actively advertise identifiable boundaries and exclude neighboring individuals or groups. Foraging activities are usually restricted to the defended territories. For these species, we report the size of the defended territory and note whether foraging occurs outside of the territory.

1.4.3.3. Population Density

Population density (the number of animals per unit area) influences how many individuals (or what proportion of a local population) might be exposed within a contaminated area. For strongly territorial species, population density can be inferred from territory size in many cases. For species with overlapping home ranges, particularly colonially breeding animals (e.g., most seabirds), population density cannot be inferred from home range size.

1.4.3.4. Annual Fecundity

Attributes related to the number of offspring produced each year that reach sexual maturity (annual fecundity) are measured in different ways depending on the life history of the species. For birds, data are generally available for clutch size, number of clutches per year, nest success (generally reflecting predation pressure), number of young fledged per successful nest (generally reflecting food availability), and number of young fledged per active nest (reflecting all causes of mortality). For mammals, litter size in wild populations often is determined by placental scars or embryo counts, and the number of young surviving to weaning is seldom known. For reptiles that lay eggs, clutch size and percent hatching can be measured in the field. For viviparous reptiles, we report the number born in a litter. For amphibians, egg masses may include thousands of eggs, but these are seldom counted.

1.4.3.5. Annual Mortality and Longevity

Longevity can influence the potential for cumulative deleterious effects and the appropriate averaging times for chronic exposures. For birds, annual adult mortality tends to be constant. For large mammalian species, however, annual adult mortality tends to be constant for several years, and then increases rapidly with age. For reptiles and amphibians, annual adult mortality can decrease with age for some time as the animals continue to grow larger and become less susceptible to predation. In the Handbook, we

report annual mortality rates by age category and typical or mean and maximum longevities, when possible.

1.4.4. Seasonal Activities

Many life-cycle attributes affect an animal's activity and foraging patterns in time and space. For example, many species of birds are present in the northern hemisphere only during the warmer months or move seasonally between the northern and southern parts of North America. Some species of mammals, reptiles, and amphibians hibernate or spend a dormant period in a burrow or den during the winter months. The species profiles describe these and other seasonal activity patterns that can influence exposure frequency and duration.

For each species, we summarize information on the seasonal occurrence of several activities including breeding, molting, migration, dispersal, and occurrence of dormancy/denning (if applicable). Deposition and utilization of fat reserves are discussed where information is available. Trends in these factors with latitude are identified.

1.5. DATA PRESENTATION FORMAT

Species-specific values for the exposure factors are presented in Chapter 2. Quantitative data for each species are presented in tables arranged in four main sections:

- Normalizing and Contact Rate Factors;
- Dietary Composition;
- Population Dynamics; and
- Seasonal Activities.

The parameter values and units used for each exposure factor are described in the remainder of this section. In the species profiles and in the Appendix, all values are identified as measured or estimated, and references are provided.

1.5.1. Normalizing and Contact Rate Factors

Normalizing and contact rate factors are presented under the heading "Factors" in Chapter 2. Several of them apply to all animals included in the Handbook, whereas some apply only to specific groups, as described in Sections 1.5.1.1 through 1.5.1.4. The column headers for these factors are explained in Table 1-6.

Table 1-6. Column Headers for Tables of Normalizing and Contact Rate Factors

Age/Sex/ Cond./Seas.	Age (e.g., A for adult, J for juvenile) Sex (e.g., M for male, F for female) Condition (e.g., I for incubating, NB for nonbreeding) Season (e.g., SP for spring, SU for summer). [Note: Only information needed to correctly interpret the value is included.]
Mean	Mean value for population sampled ± standard deviation (SD), if reported. If SD is not reported, mean value for population sampled ± standard error (SE) of the mean, if reported. For some studies, a range of typical values may be presented instead of a mean value (check the notes).
Range or (95% CI of Mean)	Range of values reported for the population sampled, or (95th percent confidence interval of the mean value).
Location (subspecies)	State(s) or province(s) in which the study was conducted (subspecies studied, if reported).
Reference	Reference for study.
Note No.	Footnote number.

1.5.1.1. All Animals

Body weight (grams or kilograms)	Measured values only. Although we use the term weight, all data are presented in units of mass. The age and sex of the animal are specified as appropriate, and

	weights may include age-weight series for young animals.
Metabolic rate (liters O_2/kg-day)	Included only if measured values were available. These data can be used to estimate metabolic rate on a kcal basis.
Metabolic rate (kcal/kg-day)	Measured or estimated basal and free-living (or field) metabolic rates. Most of the free-living values were estimated from body weight using an appropriate allometric equation.
Food ingestion rate (g/g-day)	Measured on a wet-weight basis. For birds and mammals, values measured in captivity are generally lower than for free-ranging animals. For reptiles and amphibians, food ingestion rates can be higher in captivity than in the field. Food ingestion rates can also be different in captivity than in the wild if the diet differs substantially from that consumed in the wild (e.g., dry laboratory chow has a substantially lower water content than most natural diets).
Water ingestion rate (g/g-day)	Most of these values were estimated from body weight using an allometric equation.
Sediment/soil ingestion rate	These values are not presented in the individual species profiles in Chapter 2; instead, the limited data available for soil/sediment ingestion rates (as percent soil or sediment in diet on a dry weight basis) for selected species are presented in Section 4.1.3.
Inhalation rate (m^3/day)	Note that this value is not normalized to body weight, but is the total volume inhaled each day. Most values were estimated from body weight using an appropriate allometric equation.
Surface area (cm^2)	Most values were estimated from body weight using an appropriate allometric equation.

1.5.1.2. Birds

Egg weight (grams)	Included only if measured values were available.
Weight at hatching (grams)	Included only if measured values were available.

Chick or nestling growth rate (g/day)	Included only if measured values were available. The ages to which the growth rate applies are indicated.
Weight at fledging (grams)	Included only if measured values were available.

1.5.1.3. Mammals

Neonate weight (grams)	Included only if measured values were available.
Pup growth rate (g/day)	Included only if measured values were available. The ages to which the growth rate applies are indicated.
Weight at weaning (grams)	Included only if measured values were available.

1.5.1.4. Reptiles and Amphibians

Body length (mm)	Length is the most common measure of size and growth rate reported for reptiles and amphibians. Body length-weight relationships are reported whenever possible. Data for snakes include snout-to-vent lengths (SVL) and total lengths; for frogs, SVLs only; and for turtles, carapace (dorsal shell) and plastron (ventral shell) lengths.
Egg weight (grams)	Included only if measured values were available.
Weight at hatching (grams)	Included only if measured values were available.
Juvenile growth rate (g/day)	Included only if measured values were available. The ages to which the growth rate applies are indicated.
Tadpole weight (grams)	For frogs only; included only if measured values were available.
Larval or eft weight (grams)	For newts only; included only if measured values were available.

1.5.2. Dietary Composition

1.5.2.1. All Animals

The diet of all animals is separated by season whenever possible. Up to three months of data were combined for each of the four seasons, provided the animals were in the same location and habitat during the 3-month period (Table 1-7). The diet components are listed in the first column shaded in grey. The measure of dietary composition is enclosed in parentheses under the "Location (subspecies)/Habitat (measure)" column header.

Table 1-7. Column Headers for Tables on Dietary Composition

Dietary Composition	List of food types.
Spring	Dietary composition during spring (March, April, May).
Summer	Dietary composition during summer (June, July, August).
Fall	Dietary composition during fall (September, October, November).
Winter	Dietary composition during winter (December, January, February).
Location (subspecies)/	State(s) or Canadian province(s) in which study was conducted (subspecies studied, if reported).
Habitat (measure)	Type of habitat associated with the reported values (measure used to quantify dietary composition).
Reference	Reference for study.
Note No.	Footnote number.

Dietary composition can be expressed in many ways. In the Appendix, we have presented all measures of dietary composition encountered in the literature review. In the species profiles in Chapter 2, we have emphasized dietary composition measured as the percentage of the total food intake of each food type on a wet-weight basis. These data

are usually determined by analysis of stomach or other digestive tract contents. For entries based on these measures, the total of the values listed under each seasonal column should approximate 100 percent. As Chapter 4 indicates, it is relatively simple to estimate contaminant intakes when dietary composition is measured on a wet-weight basis. Dietary composition may also be measured on a dry-weight basis; information on the relative water content of the different dietary items provided in Chapter 4 can be used to convert dry-weight composition to wet-weight composition if needed. Dietary composition is often reported as frequency of occurrence in digestive tract contents, scats, or regurgitated pellets. For these measures, the total of the values in the seasonal columns can exceed 100 (e.g., fish occurred in 90 percent of scats, amphibia in 75 percent of scats, and molluscs in 15 percent of scats). We do not provide guidance on how to estimate contaminant intakes based on these measures; however, studies using these measures can indicate seasonal and geographic differences in diet.

1.5.3. Population Dynamics

Distribution and mortality parameters can be defined similarly for birds, mammals, reptiles, and amphibians (Section 1.5.3.1). Reproductive parameters, however, differ among these groups (Sections 1.5.3.2 through 1.5.3.5). The column headers for population dynamics are described in Table 1-8.

1.5.3.1. All Animals

Home range size (ha)/ Territory size (ha)/ Foraging radius (m)	Area usually listed in hectares, radius in kilometers. The home range for species such as mink or kingfishers, which spend most of their time along shoreline areas, is sometimes described as kilometers of shoreline. For some species with extremely small breeding territories, we used m^2 instead of hectares. For colonially nesting birds, foraging radii are listed in kilometers. For frogs, we found information only on male breeding territory size, which does not include the foraging range of either sex.
Population density (N/ha)	Usually listed as number (N) of individuals per hectare, although numbers of breeding pairs or nests per hectare are used for some species.

Table 1-8. Column Headers for Tables of Factors for Population Dynamics

Age/Sex/ Cond./Seas.	Age (e.g., A for adult, J for juvenile) Sex (e.g., M for male, F for female) Condition (e.g., I for incubating, NB for nonbreeding) Season (e.g., SP for spring, SU for summer). [Note: Only information needed to correctly interpret the value is included.]
Mean	Mean value for population sampled ± standard deviation (SD), if reported. If SD is not reported, mean value for population sampled ± standard error (SE) of the mean, if reported. For some studies, a range of typical values may be presented instead of a mean.
Range	Range of values reported for the population sampled.
Location (subspecies)/ Habitat	State(s) or province(s) in which the study was conducted (subspecies studied, if reported). Type of habitat associated with the reported values.
Reference	Reference for study.
Note No.	Footnote number.

Age at sexual maturity	Age at which first successful reproduction occurs. In many long-lived species, only a portion of the population breeds at this age.
Annual mortality rates	Usually listed as percent per year. Can vary with age and sex of the animal.
Longevity	Mean longevity of adult members of the population (does not include juvenile mortality). When available, an estimate of maximum longevity is also provided (usually from studies of captive individuals).

1.5.3.2. Birds

Clutch size	Number of eggs laid per active nest (usually the number laid per female, but in some species, more than one female may lay in a single nest).

Clutches per year	Number of successful clutches laid per year. Additional clutches may be laid if a clutch is lost early in incubation.
Days incubation	Measured from day incubation starts (often after laying of last egg) to hatching.
Age at fledging	Age at which young can maintain sustained flight. Parents usually continue to feed or to accompany young for some time after fledging.
Number fledged per active nest	Number fledged for each nest for which incubation was initiated.
Percent nests successful	Percent of active nests hatching eggs.
Number fledged per successful nest	Number fledged for each nest for which at least one young hatched.

1.5.3.3. Mammals

Litter size	Based on embryo counts whenever possible. Use of placental scars can result in overestimation of litter size and counts of live pups in dens can result in underestimation of litter size.
Litters per year	Number of litters born each year.
Days gestation	Days of active gestation. For species with delayed implantation, this period can be substantially shorter than the period from mating to birth.
Pup growth rate	Usually reported as grams per day during a specified age interval. May be reported instead as a series of weights for pups of specified ages.
Age at weaning	Age when the pups begin to leave the nest or den to actively feed for most of their food.

1.5.3.4. Reptiles and Amphibians

Clutch or litter size	Number of eggs laid per female for egg-laying species; number of live offspring born for species bearing live young (e.g., water snake). Reported by age and size of the female when appropriate.

Clutches or litters per year	Number of clutches or litters produced each year. Not limited to successful clutches because there is no parental care in most temperate species.
Days incubation	Measured from laying of last egg to hatching. The duration of incubation depends on the temperature of the substrate into which eggs are laid.
Juvenile growth rate	Usually reported as grams per day during a specified age (or size) interval. May be reported instead as a series of weights for juveniles of specified sizes if those are the only data available.
Length at sexual maturity	Length at which the first successful reproduction usually occurs (see above). More commonly reported than weight or age at sexual maturity.

1.5.4. Seasonal Activities

The meaning of most of the factors included under seasonal activities are self-evident. Those requiring additional explanation are described in Sections 1.5.4.1 through 1.5.4.3. The column headers for this section of the table are shown in Table 1-9.

Table 1-9. Column Headers for Tables on Seasonal Activities

Begin	Month that the activity usually begins.
Peak	Month(s) that the activity peaks (most of the population is involved).
End	Month that the activity usually ends.
Location (subspecies)	State(s) or province(s) in which the study was conducted (subspecies studied, if reported).
Reference	Reference for study.
Note No.	Footnote number.

1.5.4.1. Birds

Mating/laying	These two factors are combined because birds lay eggs within a day or two of mating (they begin mating a day or two prior to laying the first egg).

1.5.4.2. Mammals

Mating	Although for most mammals the mating season corresponds to conception and is followed immediately by gestation, some species exhibit delayed implantation.
Parturition	Birth of the pups (also known as whelping for canids).

1.5.4.3. Reptiles and Amphibians

Mating	Because fertilization is external for many amphibians (i.e., most toads and frogs and some salamanders), mating occurs at the same time as egg-laying for these species. For reptiles, fertilization is internal, and for some species, sperm may be stored for months or years following mating.
Nesting	Because many female reptiles can store sperm, nesting (i.e., egg-laying) often occurs weeks or months after mating.

1.5.5. Abbreviations Used in Tables

Age (life stage)

A	adult (for all groups)
B	both adults and juveniles/yearlings (for all groups)
C	chick (for birds)
E	eft (for newts)
F	fledgling (for birds)
H	hatchling (for birds, reptiles, and amphibians)
J	juvenile (for all groups)
N	nestling (for birds) or neonate (for mammals, water snakes)
P	pup (for mammals)
T	tadpole (for frogs)
Y	yearling (for all groups)

Sex

B	both sexes
F	female
M	male

Units

time:

d	day
wk	week
yr	year

mass:

g	gram
kg	kilogram

length:

mm	millimeter
cm	centimeter
m	meter
km	kilometer

temperature:

°C	degrees Centigrade

energy:

cal	calorie
kcal	kilocalorie

area:

ha	hectare
m^2	square meter

volume:

ml	milliliter
l	liter

Other

NS	not stated

1.6. LITERATURE SEARCH STRATEGY

The profiles in this Handbook are intended to provide a readily available compendium of representative data for each selected species to assist in conducting screening-level exposure assessments. They are not intended to provide complete reviews of all available published and unpublished information or indepth biological summaries. Moreover, the Handbook is not intended to replace field guides or natural history or animal physiology texts. We have attempted to balance generalities, accuracy, and coverage of each species relative to the available literature to meet our stated purposes. We describe the process by which we identified literature for the Handbook below.

The U.S. Fish and Wildlife Service (USFWS) Office of Information Transfer conducted the primary literature search for species-specific information using their Wildlife Review/Fisheries Review database. The database is compiled by USFWS personnel from a review of over 1,130 publication sources (largely journals, but also USFWS publications) from the United States and other countries, most dating back to 1971. The search was conducted in May 1990 using common and scientific species names, but no further restrictions on search terms were applied. All titles identified for each species were reviewed to determine potential utility for the Handbook, and promising references were reviewed in full. Recent review articles, handbooks, and natural history texts were used to identify other relevant literature and literature from before 1971. Commercial databases were not searched initially. Following peer review of the Handbook in 1991 and 1992, all references submitted or identified by peer reviewers were evaluated, and additional relevant citations were obtained for review. Limited (1970 forward) literature searches for some species were conducted using commercial databases in 1992.

For information concerning physiology, allometric equations, energetics, and other general topics, literature was identified on the basis of recent review articles or books in the field suggested by experts in the field and by peer reviewers.

Because of resource limitations, we have included some values from secondary citations. In these cases, our intent was to carefully record the original source and to clearly indicate from which secondary source it was obtained. Users are encouraged to obtain the primary sources to verify these values.

We used certain field guides consistently throughout each taxonomic category to provide greater comparability of general species characteristics. The use of a specific field guide does not constitute endorsement.

Because our literature search strategy may not have included all journals of interest and did not consistently cover other sources of information (e.g., books, theses, dissertations, state wildlife reports, conference proceedings), we would appreciate any assistance that users might provide in identifying additional sources of information that

would help to fill data gaps or to improve the information in the Handbook. In particular, Ph.D. dissertations and master's theses often contain relevant but unpublished information.

1.7. REFERENCES

Peters, R.H. (1983) The ecological implications of body size. Cambridge, England: Cambridge University Press.

U.S. Environmental Protection Agency. (1989a) Risk assessment guidance for Superfund: volume II--environmental evaluation manual, interim final. Washington, DC: Office of Solid Waste, Office of Emergency and Remedial Response; EPA report no. EPA/540/1-89/001A.

U.S. Environmental Protection Agency. (1989b) Ecological assessment of hazardous waste sites: a field and laboratory reference. Corvallis, OR: Environmental Research Laboratory; EPA report no. EPA/600/3-89/013.

U.S. Environmental Protection Agency. (1989c) Exposure factors handbook. Washington, DC: Office of Health and Environmental Assessment; EPA report no. EPA/600/8-89/043.

U.S. Environmental Protection Agency. (1992) Evaluation of terrestrial indicators for use in ecological assessments at hazardous waste sites. Washington, DC: Office of Research and Development; EPA report no. EPA/600/R-92/183.

2. EXPOSURE FACTORS AND DESCRIPTIONS OF SELECTED SPECIES

Chapter 2 includes exposure profiles for the selected species in three subsections: birds (Section 2.1), mammals (Section 2.2), and reptiles and amphibians (Section 2.3). Each species profile follows the same format, beginning with an introduction to the taxonomic group to which the species belongs and a qualitative description of relevant aspects of the species' natural history. Next, a list of similar species is provided to help identify species that might share certain exposure characteristics, although they may have different geographic ranges, diets, and habitat preferences. Each species profile then presents a series of tables presenting values for normalizing and contact rate factors, dietary composition, population dynamics, and seasonal activity patterns that represent the range of values that we identified in our literature review. Table format is described in Section 1.5. Data on soil and sediment ingestion are limited; we present these data in a separate section (4.1.3) for easy comparison among species. Finally, each profile includes the references cited in the species profile and in the corresponding Appendix tables.

2.1. BIRDS

Table 2-1 lists the bird species described in this section. For range maps, refer to the general references identified in individual species profiles. The remainder of this section is organized by species in the order presented in Table 2-1. The availability of published information varies substantially among species, as is reflected in the profiles. Some species include two or more subspecies; these are indicated in the profiles when reported by the investigators. For many studies, the subspecies, although not identified, can be inferred from the study location and geographic range of the subspecies. Average lengths of birds are reported from museum study skins measured from bill tip to tail tip. Body weight is reported as fresh wet weight with plumage, unless otherwise noted.

Table 2-1. Birds Included in the Handbook

Order Family	Common name	Scientific name	Section
Ciconiformes			
Ardeidae	great blue heron	*Ardea herodias*	2.1.1
Anseriformes			
Anatidae	Canada goose	*Branta canadensis*	2.1.2
	mallard	*Anas platyrhynchos*	2.1.3
	lesser scaup	*Aythya affinis*	2.1.4
Falconiformes			
Accipitridae	osprey	*Pandion haliaetus*	2.1.5
	red-tailed hawk	*Buteo jamaicensis*	2.1.6
	bald eagle	*Haliaeetus leucocephalus*	2.1.7
Falconidae	American kestrel	*Falco sparverius*	2.1.8
Galliformes			
Phasianidae	northern bobwhite	*Colinus virginianus*	2.1.9
Charadriiformes			
Scolopacidae	American woodcock	*Scolopax minor*	2.1.10
	spotted sandpiper	*Actitis macularia*	2.1.11
Laridae	herring gull	*Larus argentatus*	2.1.12
Coraciiformes			
Alcedinidae	belted kingfisher	*Ceryle alcyon*	2.1.13
Passeriformes			
Troglodytidae	marsh wren	*Cistothorus palustris*	2.1.14
Muscicapidae	American robin	*Turdus migratorius*	2.1.15

2.1.1. Great Blue Heron (herons)

Order *Ciconiiformes*, Family *Ardeidae*. Herons, egrets, and bitterns are medium to large wading birds with long necks and spear-like bills. Nearly all species feed primarily on aquatic animal life (e.g., fish, frogs, crayfish, insects) and are common along the margins of most freshwater and saltwater bodies and wetlands (Kushlan, 1978). Their long legs, necks, and bills are adapted for wading in shallow water and stabbing prey. Most species build their nests in trees near their foraging habitat, and many nest colonially. Members of this group range in size from the least bittern (28 to 36 cm bill tip to tail tip) to the great blue heron (106 to 132 cm tall). The sexes are similar in size and appearance.

Selected species

The great blue heron (*Ardea herodias*) is the largest member of the group in North America and feeds primarily on aquatic animals. It is widely distributed in both saltwater and freshwater environments. There are four subspecies in the United States and Canada: *A. h. wardi* (Kansas and Oklahoma across the Mississippi River to Florida), *A. h. herodias* (remainder of the North and Central American range), *A. h. fannini* (Pacific coast of North America from Alaska to Washington), and *A. h. occidentalis* (extreme south of Florida) (Bancroft, 1969, cited in Hancock and Kushlan, 1984). *A. h. occidentalis* (the great white heron) is an all white color morph that was formerly considered a separate species (National Geographic Society, 1987).

Body size. Males average slightly heavier in weight than females (Hartman, 1961; Palmer, 1962). Northern continental herons are somewhat smaller than those found in the south (Palmer, 1962). Quinney (1982) determined a relationship between age and body weight for nestling great blue herons ($r = 0.996$, $N = 16$ nestlings, and 274 measurements):

$$BW = 55.6 \times A - 47.4$$

where BW equals body weight in grams and A equals age in days.

Habitat. Great blue herons inhabit a variety of freshwater and marine areas, including freshwater lakes and rivers, brackish marshes, lagoons, mangroves, and coastal wetlands, particularly where small fish are plentiful in shallow areas (Spendelow and Patton, 1988; Short and Cooper, 1985). They are often seen on tidal flats and sandbars and occasionally forage in wet meadows, pastures, and other terrestrial habitats (Palmer, 1962). Great blue herons tend to nest in dense colonies, or heronries. The location of the heronry is generally close to foraging grounds, and tall trees are preferred over shorter trees or bushes for nest sites (Bent, 1926; Palmer, 1962; Gibbs et al., 1987). They also may nest on the ground, on rock ledges, or on sea cliffs (Palmer, 1962).

Food habits. Fish are the preferred prey, but great blues also eat amphibians, reptiles, crustaceans, insects, birds, and mammals (Alexander, 1977; Bent, 1926; Hoffman, 1978; Kirkpatrick, 1940; Peifer, 1979). When fishing, they mainly use two foraging techniques: standing still and waiting for fish to swim within striking distance or

slow wading to catch more sedentary prey (such as flounder and sculpin) (Bent, 1926; Willard, 1977). To fish, they require shallow waters (up to 0.5 m) with a firm substrate (Short and Cooper, 1985). Fish up to about 20 cm in length were dominant in the diet of herons foraging in southwestern Lake Erie (Hoffman, 1978), and 95 percent of fish consumed by great blues in a Wisconsin population were less than 25 cm in length (Kirkpatrick, 1940). Great blues sometimes forage in wet meadows and pastures in pursuit of lizards, small mammals, and large insects (Palmer, 1962; Peifer, 1979). In northern areas, small mammals such as meadow voles may be an important part of the diet early in the breeding season, possibly because some aquatic foraging areas may still be partially frozen when the herons arrive (Collazo, 1985). Consumption of larger prey (fish, frogs, rodents) is often followed by drinks of water (Hedeen, 1967); terrestrial prey such as voles are usually dunked in water before they are swallowed (Peifer, 1979). Adult herons tend to deliver the same type and size of food to their nestlings that they consume themselves, but they deliver it well digested for young nestlings and less well digested as the nestlings grow (Kushlan, 1978). Adults tend to feed solitarily, although they may feed in single or mixed species flocks where there are large concentrations of prey (Bayer, 1978; Krebs, 1974; Kushlan, 1978; Willard, 1977); fledglings are frequently seen foraging together (Dowd and Flake, 1985). Kushlan (1978) developed a regression equation relating the amount of food ingested per day to body weight for wading birds (N = seven species):

$$\log(FI) = 0.966 \log(BW) - 0.640$$

where FI equals food ingestion in grams per day and BW equals body weight in grams.

Molt. Adults undergo a complete molt in the late summer and fall and a partial molt of the contour feathers in the late winter and early spring (Bent, 1926). Young herons attain full adult plumage in the summer/fall molt at the end of their second year (Bent, 1926).

Migration. In the northern part of its range, most great blues are migratory, some moving to the southern Atlantic and Gulf States to overwinter with the resident populations of herons (Bent, 1926; Palmer, 1962), others continuing on to Cuba and Central and South America (Hancock and Kushlan, 1984). Most migrating herons leave their breeding grounds by October or November and return between February and April (Bent, 1926).

Breeding activities and social organization. The male great blue heron selects the site for the breeding territory, and nests generally consist of a stick platform over 1 m in diameter (Palmer, 1962). Great blues often use a nest for more than 1 year, expanding it with each use (Palmer, 1962). Mean clutch sizes range from three to five (see table); in general, clutch size tends to increase with latitude (Pratt, 1972). Only one brood is raised per year; however, if a clutch is destroyed, great blues may lay a replacement clutch, usually with fewer eggs than the initial clutch (Palmer, 1962; Pratt and Winkler, 1985). Both parents incubate and feed the young (Palmer, 1962; Hancock and Kushlan, 1984). During the breeding season, great blues are monogamous and colonial, with from a few to hundreds of pairs nesting in the same area or heronry (Gibbs et al., 1987). Colonies may

include other species, such as great egrets or double-crested cormorants (Pratt and Winkler, 1985; Mock et al., 1987).

Home range and resources. Breeding colonies are generally close to foraging grounds (Bent, 1926; Palmer, 1962; Gibbs et al., 1987). Mathisen and Richards (1978) found the distance between heronries and possible feeding areas in Minnesota lakes to range from 0 to 4.2 km, averaging 1.8 km. Another study found that most heronries along the North Carolina coast were located near inlets with large concentrations of fish, an average of 7 to 8 km away (Parnell and Soots, 1978, cited in Short and Cooper, 1985). Fifteen to 20 km is the farthest great blue herons regularly travel between foraging areas and colonies (Gibbs et al., 1987; Gibbs, 1991; Peifer, 1979). In the northern portion of their range, great blue herons often build nests in tall trees over dry land, whereas in the southern part of their range, they usually nest in swamp trees, including mangroves (Palmer, 1962). Each breeding pair defends a small territory around the nest, the size of which depends on local habitat and the birds' stage of reproduction (Hancock and Kushlan, 1984). Herons in some areas also defend feeding territories (Peifer, 1979). In other areas, great blues appear to be opportunistic foragers, lacking strict fidelity to particular feeding sites (Dowd and Flake, 1985). A study in North Dakota found that herons often returned to the same general areas, but different individuals often used the same areas at different times (Dowd and Flake, 1985).

Population density. Because great blues nest colonially, local population density (i.e., colony density, colony size, and number of colonies) varies with the availability of suitable nesting habitat as well as foraging habitat. On islands in coastal Maine, Gibbs and others (1987) found a significant correlation between colony size and the area of tidal and intertidal wetlands within 20 km of the colonies, which was the longest distance herons in the study colonies traveled on foraging trips. In western Oregon, the size of heronries was found to range from 32 to 161 active nests; the area enclosed by peripheral nest trees within the colonies ranged from 0.08 to 1.21 ha (Werschkul et al., 1977).

Population dynamics. Most nestling loss is a result of starvation, although some losses to predation do occur (Collazo, 1981; Hancock and Kushlan, 1984). In a study of 243 nests in a coastal California colony, 65 percent of the chicks fledged, 20 percent starved, 7 percent were taken by predators, and 7 percent were lost to other causes (Pratt and Winkler, 1985). Estimates of the number of young fledged each year by breeding pairs range from 0.85 to 3.1 (Pratt, 1970; Pratt, 1972; McAloney, 1973; Pratt and Winkler, 1985; Quinney, 1982). Based on banding studies, about two-thirds of the fledglings do not survive more than 1 year, although they may survive better in protected wildlife refuges (Bayer, 1981a). Values for later years indicate that about one-third to one-fifth of the 2-year-old and older birds are lost each year (Bayer, 1981a; Henny, 1972; Owen, 1959).

Similar species (from general references)

- The great egret (*Casmerodius albus*) is almost the same size (96 cm length) as the great blue heron and is found over a limited range in the breeding season, including areas in the central and eastern United States and the east and west coasts. It winters in coastal areas of the United States and in

Mexico and farther south. The great egret's habitat preferences are similar to those of the great blue heron.

- The snowy egret (*Egretta thula*), one of the medium-sized herons (51 to 69 cm), shuffles its feet to stir up benthic aquatic prey. It is found mostly in freshwater and saltwater marshes but also sometimes follows cattle and other livestock as does the cattle egret. It breeds in parts of the western, southeastern, and east coasts of the United States and winters along both coasts of the southern United States and farther south.

- The cattle egret (*Bubulcus ibis*) is seen in agricultural pastures and fields, where it follows livestock to pick up insects disturbed by grazing. An Old World species, it was introduced into South America and reached Florida in the 1950's. It reached California by the 1960's and has been continuing to expand its range.

- The green-backed heron (*Butorides striatus*), one of the smaller herons (41 to 56 cm), breeds over most of the United States except for the northwest and southern midwest. It has a winter range similar to that of the snowy egret and seems to prefer water bodies with woodland cover.

- The tricolored heron (*Egretta tricolor*) (formerly known as the Louisiana heron) is common in salt marshes and mangrove swamps of the east and gulf coasts, but it is rare inland.

- The little blue heron (*Egretta caerulea*) is common in freshwater ponds, lakes, and marshes and coastal saltwater wetlands of the Gulf Coast States. Juveniles are easily confused with juvenile snowy egrets. This species hunts by walking slowly in shallow waters, and its diet typically includes fish, amphibians, crayfish, and insects.

- The black-crowned night heron (*Nycticorax nycticorax*), characterized by a heavy body, short thick neck, and short legs (64 cm), is a common heron of freshwater swamps and tidal marshes, roosting by day in trees. It typically feeds by night, predominantly on aquatic species, fish, amphibians, and insects. This heron is extremely widespread, occurring in North and South America, Eurasia, and Africa. It breeds over much of the United States and parts of central Canada and winters along both coasts of the United States and farther south.

- The yellow-crowned night heron (*Nyctanassa violacea*) (61 cm) is similar to the black-crowned but is more restricted in its range to the southeastern United States. It roosts in trees in wet woods, swamps, and low coastal shrubs.

- The American bittern (*Botaurus lentiginosus*), another of the medium-sized herons (58 to 70 cm), is a relatively common but elusive inhabitant of freshwater and brackish marshes and reedy lakes. It is a solitary feeder,

consuming fish, crayfish, reptiles, amphibians, insects, and even small mammals. Its breeding range includes most of Canada and the United States, although much of the southern United States is inhabited only during the winter.

- The least bittern (*Ixobrychus exilis*), the smallest of the North American herons (33 cm), also is an elusive inhabitant of reedy areas. Its breeding range is restricted largely to the eastern half of the United States.

General references

Hancock and Kushlan (1984); Robbins et al. (1983); National Geographic Society (1987); Palmer (1962); Short and Cooper (1985).

Great Blue Heron *(Ardea herodias)*

Factors	Age/Sex/ Cond./Seas.	Mean	Range or (95% CI of mean)	Location	Reference	Note No.
Body Weight (g)	A B	2,229 ± 762 SD		eastern North America	Quinney, 1982	
	A F	2,204 ± 337 SD		NS	Hartman, 1961	1
	A M	2,576 ± 299 SD				
	yearlings	2,340 ± 490 SD	1,940 - 2,970	central Oregon	Bayer, 1981b	
	juveniles	1,990 ± 550 SD	1,370 - 2,750			
	nestlings:			Nova Scotia, Canada	McAloney, 1973	
	day 1	86				
	day 5	170				
	day 10	567				
	day 15	983				
	day 20	1,115				
	day 25	1,441				
	day 30	1,593				
	day 35	1,786				
	day 40	2,055				
Metabolic Rate (kcal/kg-day)	A B basal	62			estimated	2
	A B free-living	165	(78 - 353)		estimated	3
Food Ingestion Rate (g/g-day)	A B	0.18		NS	Kushlan, 1978	4
Water Ingestion Rate (g/g-day)	A B	0.045			estimated	5
Inhalation Rate (m^3/day)	A B	0.76			estimated	6
Surface Area (cm^2)	A B	1,711			estimated	7

Great Blue Heron *(Ardea herodias)*

Dietary Composition	Spring	Summer	Fall	Winter	Location/Habitat (measure)	Reference	Note No.
trout non-trout fish crustaceans/amphibians		59 39 2			lower Michigan/lake (% wet weight; stomach contents)	Alexander, 1977	
trout non-trout fish crustaceans amphibians birds and mammals		89 5 1 4 1			lower Michigan/river (% wet weight; stomach contents)	Alexander, 1977	
Atlantic silverside mummichog American eel *Gaspereaux* pollack yellow perch		3.6 2.4 52.6 29.9 8.9 2.6			Nova Scotia/Boot Island (% wet weight; items regurgitated by nestlings)	Quinney, 1982	
staghorn sculpin small medium large starry flounder small medium large other small medium		 27.8 7.6 2.2 15.0 8.1 5.2 30.6 3.5			Vancouver, BC/coastal island (% of fish observed caught; small = less than 1/3 beak length; medium = about 1/2 beak length; large = longer than beak; other includes shiner sea perch and penpoint gunnels)	Krebs, 1974	

Great Blue Heron *(Ardea herodias)*

Population Dynamics	Age/Sex Cond./Seas.	Mean	Range	Location/Habitat	Reference	Note No.
Size Feeding Territory	A B fall A B winter	0.6 ± 0.1 SD ha 8.4 ± 5.4 SD ha		Oregon/freshwater marsh Oregon/estuary	Bayer, 1978	
Foraging Distance from Colony	A B summer A B summer	3.1 km 7 to 8 km	up to 24.4 km	South Dakota/river & streams North Carolina/coastal	Dowd & Flake, 1985 Parnell & Soots, 1978	 8
Population Density	summer along stream along river summer summer	 2.3 birds/km 3.6 birds/km 149 ± 53 SD nests/ha 461 nests/ha	 447 - 475	North Dakota/rivers & streams Maine/coastal islands Oregon/coastal island	Dowd & Flake, 1985 Gibbs et al., 1987 Werschkul et al., 1977	
Clutch Size		3.16 ± 0.04 SE 4.17 ± 0.85 SD 4.37	1 - 5 3 - 6 3 - 6	California/coastal canyon Nova Scotia/island Pennsylvania/NS	Pratt & Winkler, 1985 McAloney, 1973 Miller, 1943	 9
Clutches/Year		1		Pennsylvania; Oregon/NS	Miller, 1943; English, 1978	10
Days Incubation		27.1 28	25 - 30	Nova Scotia/island United States/NS	McAloney, 1973 Bent, 1926	
Age at Fledging (days)		45 60 49 to 56		Nova Scotia/island NS/NS Nova Scotia/island	McAloney, 1973 Hancock & Kushlan, 1984 Quinney, 1982	11
Number Fledge per Pair		1.7 1.96 2.8		central California/coastal northwest Oregon/river Nova Scotia/island	Pratt, 1972 English, 1978 Quinney, 1982	

Population Dynamics	Age/Sex Cond./Seas.	Mean	Range	Location/Habitat	Reference	Note No.
Number Fledge per Successful Nest		2.19 ± 0.25 SD 2.43 3.09	2 - 3	central California/coastal northwest Oregon/river Nova Scotia/island	Pratt & Winkler, 1985 English, 1978 McAloney, 1973	
Age at Sexual Maturity	B	2 years		NS	Bent, 1926	
Annual Mortality Rates (percent)	during 1st yr during 2nd yr during 3rd yr	64 36 22		United States and Canada/NS	Henny, 1972	

Seasonal Activity	Begin	Peak	End	Location	Reference	Note No.
Mating/Laying	Nov. to Dec. mid-February mid-March late March mid-April	 mid-March early May	April June early April late May	Florida central California northwest Oregon Pennsylvania Nova Scotia	Howell, 1932 Pratt & Winkler, 1985 English, 1978 Miller, 1943 McAloney, 1973	9 9
	 mid-April mid-May	early May	 mid-July	northwest Oregon Idaho Ohio	English, 1978 Collazo, 1981 Hoffman & Curnow, 1979	
	mid-Sept. mid-February mid-March late March		late October mid-March	northern US western Oregon Wisconsin; Minnesota Nova Scotia	Palmer, 1962 Werschkul et al., 1977 Bent, 1926 Bent, 1926	

1 As cited in Dunning, 1984.
2 Estimated using equation 3-28 (Lasiewski and Dawson, 1967) and body weights from Quinney (1982).
3 Estimated using equation 3-37 (Nagy, 1987) and body weights from Quinney (1982).
4 Estimated from Kushlan's (1978) allometric equation for wading birds, assuming a body weight of 2,230 g.
5 Estimated using equation 3-15 (Calder and Braun, 1983) and body weights from Quinney (1982).
6 Estimated using equation 3-19 (Lasiewski and Calder, 1971) and body weights from Quinney (1982).

Great Blue Heron *(Ardea herodias)*

7 Estimated using equation 3-21 (Meeh, 1879 and Rubner, 1883, as cited in Walsberg and King, 1978) and body weights from Quinney (1982).
8 Cited in Short and Cooper (1985).
9 Cited in Palmer (1962).
10 May replace clutch if eggs are lost, but only rear one brood (Henny, 1972).
11 Young fed around colony for 10 days after leaving nest at 45 days of age.

Great Blue Heron *(Ardea herodias)*

References (including Appendix)

Alexander, G. (1977) Food of vertebrate predators on trout waters in north central lower Michigan. Michigan Academician 10: 181-195.

Altman, P. L.; Dittmer, D. S., eds. (1968) Biology data book. 2nd ed., 3v. Bethesda, MD: Federation of American Societies for Experimental Biology.

Baird, S. F.; Brewer, T. M.; Ridgeway, R. (1884) Water birds of North America. Boston, MA: Little, Brown & Co.

Bancroft, G. (1969) (as cited in Hancock and Kushlan, 1984). Auk 86: 141-142.

Bayer, R. D. (1978) Aspects of an Oregon estuarine great blue heron population. In: Sprunt, A.; Ogden, J.; Winckler, S., eds. Wading birds. Natl. Audubon Soc. Res. Rep. 7; pp. 213-217.

Bayer, R. D. (1981a) Regional variation of great blue heron *Ardea herodias* longevity. J. Field Ornithol. 52: 210-213.

Bayer, R. D. (1981b) Weights of great blue herons (*Ardea herodias*) at the Yaquina Estuary, Oregon. Murrelet 62: 18-19.

Benedict, F. G.; Fox, E. L. (1927) (cited in Altman and Dittmer, 1968). Proc. Am. Phil. Soc. 66: 411.

Bent, A. C. (1926) Life histories of North American marsh birds. Washington, DC: U.S. Government Printing Office; Smithsonian Inst. U.S. Nat. Mus., Bull. 135.

Calder, W. A.; Braun, E. J. (1983) Scaling of osmotic regulation in mammals and birds. Am. J. Physiol. 244: R601-R606.

Collazo, J. A. (1981) Some aspects of the breeding ecology of the great blue heron at Heyburn State Park. Northwest Sci. 55: 293-297.

Collazo, J. A. (1985) Food habits of nestling great blue herons (*Ardea herodias*) at Heyburn State Park, Idaho. Northwest Sci. 59: 144-146.

Cottam, C. A.; Uhler, F. M. (1945) Birds in relation to fishes. U.S. Fish Wildl. Serv. Leaflet 272.

Cottam, C. A.; Williams, J. (1939) (as cited in Palmer, 1962). Wilson Bull. 51: 150-155.

Dowd, E.; Flake, L. D. (1985) Foraging habitats and movements of nesting great blue herons in a prairie river ecosystem, South Dakota. J. Field Ornithol. 56: 379-387.

Dunning, J. B., Jr. (1984) Body weights of 686 species of North American birds. Western Bird Banding Association, Monograph No. 1. Cave Creek, AZ: Eldon Publishing.

English, S. M. (1978) Distribution and ecology of great blue heron colonies on the Willamette River, Oregon. In: Sprunt, A.; Ogden, J.; Winckler, S., eds. Wading birds. Natl. Audubon Soc. Res. Rep. 7; pp. 235-244.

Forbes, L. S.; Simpson, K.; Kelsall, J. P., et al. (1985) Reproductive success of great blue herons in British Columbia. Can. J. Zool. 63: 1110-1113.

Gibbs, J. P. (1991) Spatial relationships between nesting colonies and foraging areas of great blue herons. Auk 108: 764-770.

Gibbs, J. P.; Woodward, S.; Hunter, M. L., et al. (1987) Determinants of great blue heron colony distribution in coastal Maine. Auk 104: 38-47.

Hancock, J.; Kushlan, J. (1984) The herons handbook. New York, NY: Harper & Row.

Hartman, F. A. (1961) Locomotor mechanisms in birds. Washington, DC: Smithsonian Misc. Coll. 143.

Hedeen, S. (1967) Feeding behavior of the great blue heron in Itasca State Park, Minnesota. Loon 39: 116-120.

Henny, C. J. (1972) An analysis of the population dynamics of selected avian species with special reference to changes during the modern pesticide era. Washington, DC: Bur. Sport. Fish. Wildl.; Wildl. Res. Rep. 1.

Henny, C. J.; Bethers, M. R. (1971) Ecology of the great blue heron with special reference to western Oregon. Can. Field-Nat. 85: 205-209.

Hoffman, R. D. (1978) The diets of herons and egrets in southwestern Lake Erie. In: Sprunt, A.; Ogden, J.; Winckler, S., eds. Wading birds. Natl. Audubon Soc. Res. Rep. 7: 365-369.

Hoffman, R. D.; Curnow, R. D. (1979) Mercury in herons, egrets, and their foods. J. Wildl. Manage 43: 85-93.

Howell, A. H. (1932) Florida bird life. Florida Dept. Game and Freshwater Fish and Bur. Biol. Survey, USDA.

Kelsall, J. P.; Simpson, K. (1979) A three year study of the great blue heron in southwestern British Columbia. Proc. Col. Waterbird Group 3: 69-74.

Kirkpatrick, C. M. (1940) Some foods of young great blue herons. Am. Midl. Nat. 24: 594-601.

Krebs, J. R. (1974) Colonial nesting and social feeding as strategies for exploiting food resources in the great blue heron (*Ardea herodias*). Behaviour 51: 93-134.

Kushlan, J. A. (1978) Feeding ecology of wading birds. In: Sprunt, A.; Ogden, J.; Winckler, S., eds. Wading birds. Natl. Audubon Soc. Res. Rep. 7; pp. 249-296.

Lasiewski, R. C.; Calder, W. A. (1971) A preliminary allometric analysis of respiratory variables in resting birds. Resp. Phys. 11: 152-166.

Lasiewski, R. C.; Dawson, W. R. (1967). A reexamination of the relation between standard metabolic rate and body weight in birds. Condor 69: 12-23.

Mathisen, J.; Richards, A. (1978) Status of great blue herons on the Chippewa National Forest. Loon 50: 104-106.

McAloney, K. (1973) The breeding biology of the great blue heron on Tobacco Island, Nova Scotia. Can. Field-Nat. 87: 137-140.

Meeh, K. (1879) Oberflachenmessungen des mensclichen Korpers. Z. Biol. 15: 426-458.

Miller, R. F. (1943) The great blue herons: the breeding birds of the Philadelphia region (Part II). Cassinia 33: 1-23.

Mitchell, C. A. (1981) Reproductive success of great blue herons at Nueces Bay, Corpus Christi, Texas. Bull. Texas Ornithol. Soc. 14: 18-21.

Mock, D. W.; Lamey, T. C.; Williams, C. F.; et al. (1987) Flexibility in the development of heron sibling aggression: an interspecific test of the prey-size hypothesis. Anim. Behav. 35: 1386-1393.

Nagy, K. A. (1987) Field metabolic rate and food requirement scaling in mammals and birds. Ecol. Monogr. 57: 111-128.

National Geographic Society. (1987) Field guide to the birds of North America. Washington, DC: National Geographic Society.

Owen, D. F. (1959) Mortality of the great blue heron as shown by banding recoveries. Auk 76: 464-470.

Page, P. J. (1970) Appendix. San Joaquin River rookery study 1970. Sacramento, CA: Calif. Dept. Fish and Game; statewide heron rookery survey progress report.

Palmer, R. S. (1949) Marine birds. Bull. Mus. Comp. Zool. Harvard 102.

Palmer, R. S. (1962) Handbook of North American birds: v. 1. New Haven, CT: Yale University Press.

Parnell, J. F.; Soots, R. F. (1978) The use of dredge islands by wading birds. Wading birds. Nat. Audubon Soc. Res. Rep. 7: 105-111.

Peifer, R. W. (1979) Great blue herons foraging for small mammals. Wilson Bull. 91: 630-631.

Poole, E. L. (1938) Weights and wing areas in North American birds. Auk 55: 511-517.

Powell, G. V.; Powell, A. H. (1986) Reproduction by great white herons *Ardea herodias* in Florida Bay as an indicator of habitat quality. Biol. Conserv. 36: 101-113.

Pratt, H. M. (1970) Breeding biology of great blue herons and common egrets in central California. Condor 72: 407-416.

Pratt, H. M. (1972) Nesting success of common egrets and great blue herons in the San Francisco Bay region. Condor 74: 447-453.

Pratt, H. M.; Winkler, D. W. (1985) Clutch size timing of laying and reproductive success in a colony of great blue herons (*Ardea herodias*) and great egrets (*Casmerodius albus*). Auk 102: 49-63.

Quinney, T. E. (1982) Growth, diet, and mortality of nestling great blue herons. Wilson Bull. 94: 571-577.

Robbins, C. S.; Bruun, B.; Zim, H. S. (1983) A guide to field identification: birds of North America. New York, NY: Golden Press.

Rubner, M. (1883) Uber den Einfluss der Korpergrosse auf Stoff- und Kraftweschsel. Z. Biol. 19: 535-562.

Short, H. L.; Cooper, R. J. (1985) Habitat suitability index models: great blue heron. U.S. Fish Wildl. Serv. Biol. Rep. No. 82(10.99); 23 pp.

Spendelow, J. A.; Patton, S. R. (1988) National atlas of coastal waterbird colonies: 1976-1982. U.S. Fish Wildl. Serv. Biol. Rep. No. 88(5).

Thompson, D. H. (1978) Feeding areas of great blue herons and great egrets nesting within the floodplain of the upper Mississippi River. Colonial Waterbirds 2: 202-213.

Vermeer, K. (1969) Great blue heron colonies in Alberta. Can. Field-Nat. 83: 237-242.

Walsberg, G. E.; King, J. R. (1978) The relationship of the external surface area of birds to skin surface area and body mass. J. Exp. Biol. 76: 185-189.

Werschkul, D. F.; McMahon, E.; Leitschuh, M.; et al. (1977) Observations on the reproductive ecology of the great blue heron (*Ardea herodias*) in western Oregon. Murrelet 58: 7-12.

Willard, D. E. (1977) The feeding ecology and behavior of five species of herons in southeastern New Jersey. Condor 79: 462-470.

Wood (1951) (cited in Palmer, 1962). Univ. Mich. Mus. Misc. Publ. No. 75.

2.1.2. Canada Goose (geese)

Order *Anseriformes*, Family *Anatidae*. Geese are large herbivorous waterfowl that feed on grains, grass sprouts, and some aquatic vegetation. Although adapted for life on the water, they forage primarily in open fields. They breed in open forested areas near lake shores and coastal marshes from the arctic tundra through temperate climates. These birds migrate in noisy flocks in the familiar V-formation, stopping in cultivated fields, wetlands, and grasslands to feed. Geese show a wide variation in size even within a species; the sexes look alike.

Selected species

The Canada goose (*Branta canadensis*) is the most widespread and abundant goose in North America. It is a popular game species and is commonly encountered on cultivated fields, golf courses, other parklands, and wetland refuge areas. Depending on subspecies, these geese can range in size from 64 to 114 cm (bill tip to tail tip), the larger geese breeding in more southerly locations than the smaller subspecies. The reverse is true in winter, with the larger subspecies wintering in the more northerly parts of the range (Palmer, 1962). The number of existing recognized subspecies varies, but most ornithologists agree that there are 11: *canadensis* (Atlantic Canada goose), *fulva* (Vancouver Canada goose), *hutchinsii* (Richardson's Canada goose), *interior* (interior Canada goose), *leucopareia* (Aleutian Canada goose), *maxima* (giant Canada goose), *minima* (cackling Canada goose), *moffitti* (Great Basin or western Canada goose), *occidentalis* (dusky Canada goose), *parvipes* (lesser Canada goose), and *taverneri* (Taverner's Canada goose) (Bellrose, 1976; Johnson et al., 1979; Palmer, 1962). Several subspecies usually mingle during migration and in wintering areas, but they breed in geographically distinct ranges. Six of the subspecies breed in Alaska (*fulva, leucopareia, minima, occidentalis, parvipes*, and *taverni*) (Johnson et al., 1979). The *leucopareia* subspecies, found in Oregon, Washington, California, and Alaska, currently is a United States federally designated threatened species (50 CFR 17.11, 1992). It is only known to breed on one of the western Aleutian islands off Alaska (Byrd and Woolington, 1983). See Bellrose (1976) for ranges, migration corridors, and wintering areas of specific subspecies and populations.

Body size. Canada geese subspecies vary greatly in size, but males are on average larger than females (see table). Body weight reaches its maximum just prior to or during the spring migration and then declines during egg-laying and incubation, sometimes by as much as 20 percent (Mainguy and Thomas, 1985; McLandress and Raveling, 1981). Most of the weight lost during incubation reflects loss of fat, which can provide over 80 percent of the energy requirements for the incubating females (Mainguy and Thomas, 1985; Murphy and Boag, 1989). Young are similar to parents in size by 2 months of age (Palmer, 1962).

Habitat. Breeding habitat includes tundra, forest muskeg in the far north, tall- and shortgrass prairie, marshes, ponds, and lakes. Most nesting sites are close to open water with high visibility in all directions (Palmer, 1962; Steel et al., 1957). In many areas, Canada geese nest predominantly on islands in ponds or lakes (Geis, 1956). Former

muskrat houses often serve as nest sites in marshes (Steel et al., 1957). Brood-rearing habitats, on the other hand, require adequate cover, and riparian areas are used more frequently than open water (Eberhardt et al., 1989a). During the fall and winter in Maryland, Harvey et al. (1988) found Canada geese to spend 57 percent of their time in farmlands (mostly corn, soybeans, and winter wheat fields) and 24 percent in forested areas.

Food habits. Canada geese are almost exclusively vegetarian, and feeding activity is concentrated in areas where food is plentiful (e.g., standing crops, scattered whole grain) (Palmer, 1962). They are primarily grazers, but must consume grit at some point to assure proper digestion (Palmer, 1962). They prefer certain foods, but will change their diet depending on the availability of a food type (Coleman and Boag, 1987). For example, when water levels are low in the south Yukon (Canada) river delta, Canada geese forage on rhizomes of *Potamogeton richardsonii* even though other forage is available; at higher water levels when the *Potamogeton* is unreachable, the geese will feed on other plants (Coleman and Boag, 1987). During fall, geese often consume green crops (e.g., winter wheat). During winter, however, they consume more energy-rich foods such as corn (Harvey et al., 1988; McLandress and Raveling, 1981). In late winter and early spring, green crops that are high in nitrogen and other important nutrients again constitute an important part of the diet (McLandress and Raveling, 1981). Canada geese often feed preferentially on the blade tips of many plants, which are higher in nitrogen than other parts of the plant (Buchsbaum et al., 1981). In Minnesota, Canada geese begin consuming green grasses as soon as they are exposed by the melting snow (McLandress and Raveling, 1981). In Maryland, on the other hand, Harvey et al. (1988) found that Canada geese did not begin consuming green crops before migration to the breeding grounds, indicating that this population may rely on green forage available at staging areas to obtain the protein and lipids required for reproduction. In the spring in Falmouth Harbor, Massachusetts, Canada geese initially consume predominantly the marsh grasses *Spartina spp.* and rushes *Juncus gerardi*, which are high in protein (Buchsbaum and Valiela, 1987). As the summer progresses, however, they feed increasingly on submerged eelgrass, *Zostera marina*, which provides more carbohydrates (Buchsbaum and Valiela, 1987).

Molt. Nonbreeders and yearlings migrate to a separate molting ground soon after arrival at the breeding grounds, while breeding birds molt on the brood-rearing grounds (Bellrose, 1976). Molting occurs earlier in nonbreeders, at least a month earlier in the larger subspecies (Palmer, 1962). Molting parents do not regain flight feathers until just prior to the time when their young first attain flight (Palmer, 1962). The flightless period of *B. c. interior* is estimated to be 32 days. For *B. c. maxima* and *B. c. moffitti*, the flightless period lasts from 39 to 40 days (Balham, 1954; Hanson, 1965, as cited in Palmer, 1962).

Migration. Migratory Canada geese leave their breeding grounds during late summer and early autumn; they return in the spring around the time the first water is opening (i.e., ice melting) but well before snow cover has disappeared (Bellrose, 1976). Spring migration begins later for northerly populations, with geese that winter in mild climates departing as early as mid-January, while those wintering in the coldest areas do not move northward until the beginning of March (Bellrose, 1976). The bulk of the migrants typically arrive on the summer breeding grounds 3 weeks after the first birds

(Bellrose, 1976). Some populations have become resident year-round, for example, *B. c. maxima* in Missouri (Brakhage, 1965) and in southeast Georgia and southwest Alabama (Combs et al., 1984). During both the spring and fall migrations, geese tend to gather in large flocks and feed for several weeks in "staging" areas along major waterfowl flyways (Bellrose, 1976).

Breeding activities and social organization. Canada geese arrive on the breeding grounds in flocks, and soon after, the male becomes territorial and aggressive toward other birds (Palmer, 1962). Lifelong monogamy following their first breeding is the general rule with these geese (Palmer, 1962). Nests are built on the ground in a position with good visibility (Palmer, 1962). During incubation the male stands guard, while the female incubates the eggs, which she normally leaves two or three times daily to feed, bath, drink, and preen (Murphy and Boag, 1989). Both parents accompany the young through the brood period (Bellrose, 1976; Brakhage, 1965). Canada geese return to the breeding grounds as family units, but the yearlings leave their parents soon after arrival (Bellrose, 1976).

Home range and resources. The foraging home range of Canada geese varies with season, latitude, and breeding condition. Soon after hatching, goose families move away from the nesting sites to other areas with adequate cover and forage to rear their broods (Byrd and Woolington, 1983). Newly hatched families may have to travel 10 to 20 km from the nest site to reach areas with adequate aquatic vegetation or pasture grasses (Geis, 1956). Although the families stay predominantly on land, often in riparian areas, they usually are close to water. Eberhardt et al. (1989a) found goslings within 5 m of water most of the time; only 7 percent of sightings were farther than 50 m away. During the spring and fall migrations and in winter, Canada geese can be found on open water or refuges near grain fields or coastal estuaries (Leopold et al., 1981).

Population density. Breeding population densities of Canada geese vary widely. Low nesting densities (i.e., less than 0.005 per hectare) are common in the Northwest Territories of Canada (Smith and Sutton, 1953, 1954) and intermediate densities (i.e., 0.02 to 0.7 per hectare) have been reported for Alaska (Cornley et al., 1985). In some more southerly locations (e.g., California), colonial nesting situations have been reported, with as many as 32 nests located on half an acre (Naylor, 1953, as cited in Palmer, 1962).

Population dynamics. The earliest Canada geese begin breeding is around 2 to 3 years of age (MacInnes and Dunn, 1988; Brakhage, 1965). In the larger subspecies, only a small proportion of the birds under 4 years may attempt to breed. For example, in Manitoba, Moser and Rusch (1989) found that only 7 percent of 2-year-old and 15 percent of 3-year-old *B. c. interior* laid eggs. Canada geese only attempt to rear one brood per year. In the more southerly latitudes, Canada geese will renest if a clutch is lost prior to incubation (Brakhage, 1965; Geis, 1956). In general, both clutch size and success at rearing goslings increase with the age of the breeder (Brakhage, 1965). Raveling (1981) found that older *B. c. maxima* (4 plus years) raised more than twice as many goslings to fledging as did younger (2 to 3 years) birds. Population age structure and annual mortality vary with hunting pressure as well as natural factors.

Similar species (from general references)

- The Brant goose (*Branta bernicla*) is approximately the size of the smaller Canada geese subspecies (length 25 cm). It is primarily a sea goose and is rare inland. It winters along both the east and west coasts of the United States, where it feeds on aquatic plants in shallow bays and estuaries. It breeds in the high arctic.

- The greater white-fronted goose (*Anser albifrons*) is limited to certain areas west of the Mississippi River and averages 71 cm in length. Its habits are similar to those of other geese.

- The snow goose (*Chen caerulescens*) breeds in the Arctic and winters in selected coastal areas across the United States. However, this average-sized goose (71 cm) is a migratory visitor to much of the central United States.

- The Ross' goose (*Chen rosii*) breeds in the high arctic tundra and winters in some areas of the southwest United States. This relatively small (58 cm) goose is a rare visitor to the mid-Atlantic States and is always seen with snow geese.

General references

Bellrose (1976); Kortright (1955); National Geographic Society (1987); Palmer (1962).

Canada Goose (*Branta canadensis*)

Factors	Age/Sex/ Cond./Seas.	Mean	Range or (95% CI of mean)	Location (subspecies)	Reference	Note No.
Body Weight (g)	A M late sum.	1,443 ± 32 SE	1,260 - 1,605	Alaska (*minima*)	Raveling, 1979	
	A F late sum.	1,362 ± 54 SE	1,195 - 1,590			
	A M winter	2,769 ± 30 SE		Colorado (*parvipes*)	Grieb, 1970	
	A F winter	2,472 ± 23 SE				
	A M not spec.	3,992		NS (*canadensis*)	Webster (unpublished) in Bellrose, 1976	
	A F not spec.	3,447				
	A M fall	4,212 ± 35 SE	3,799 - 4,727	Illinois (*interior*)	Raveling, 1968	
	A F fall	3,550 ± 31 SE	3,147 - 3,856			
	A M late sum.	4,960		Missouri (*maxima*)	Brakhage, 1965	
	A F late sum.	4,160				
	M at hatching	108.7		Alberta (*moffitti*)	LeBlanc, 1987b	
	F at hatching	109.5				
	B day 10	150		Alaska (*minima*)	Sedinger, 1986	1
	B day 20	450				
	B day 30	755				
	B day 40	950				
	B day 47	1,050				
	B day 0	110		NS (*moffitti*)	Williams (unpublished) in Palmer, 1976	
	B day 9	240				
	B day 16	440				
	B day 30	1,400				
	B day 44	2,400				
	B day 51	2,600				
	M at fledging	87% adult wt		Alaska (*minima*)	Sedinger, 1986	
	F at fledging	89% adult wt				

Canada Goose (*Branta canadensis*)

Factors	Age/Sex/ Cond./Seas.	Mean	Range or (95% CI of mean)	Location (subspecies)	Reference	Note No.
Body Fat (g lipid)	F fall migr.	182 ± 24 SE	117 - 264	Alaska in winter (*minima*)	Raveling, 1979	
	F winter	57 ± 6 SE	34 - 71	California in summer		
	F spring migr.	172 ± 25 SE	68 - 362			
	F prelaying	171 (no SE; N=2)	136 - 205			
	F end incub.	33 ± 5 SE	14 - 51			
	F early molt	108 ± 13 SE	62 - 179			
	F prelaying	751 ± 45 SE		Ontario, Canada (*maxima*)	Thomas et al., 1983	
	F incubating	611 ± 40 SE				
	F late incub.	166 ± 18 SE				
	F molting	485 ± 37 SE				
Egg Weight (g)		96		NS (*minima*)	Owen, 1980	2
		127		NS (*leucopa*)	Owen, 1980	2
		163		Alberta, Canada (*moffitti*)	LeBlanc, 1987a	
Metabolic Rate (kcal/kg-day)	free-living:					
	A M winter		105 - 209	Illinois in winter (*interior*)	Williams & Kendeigh, 1982	3
	A M spring		105 - 203	Ontario, Canada in summer		
	A M summer		115 - 253			
	A M fall		100 - 209			
	A F spring		130 - 220		Williams & Kendeigh, 1982	3
	A F summer		143 - 274	(*interior*)		
	free-living:					
	A M	185	(87 - 391)		estimated	4a
	A F	187	(88 - 397)	(*minima*)		
	A M	141	(65 - 304)		estimated	4b
	A F	147	(69 - 316)	(*interior*)		
	A M	135	(63 - 292)		estimated	4c
	A F	142	(66 - 305)	(*maxima*)		

Canada Goose (*Branta canadensis*)

Factors	Age/Sex/ Cond./Seas.	Mean	Range or (95% CI of mean)	Location (subspecies)	Reference	Note No.
Food Ingestion Rate (g/g-day)	A M winter A F winter	0.030 0.033		(*interior*) captive	Joyner et al., 1984	5
	A M spring A F spring	0.030 0.031		(*interior*) captive	Joyner et al., 1984	5
Water Ingestion Rate (g/g-day)	A M A F	0.052 0.053		(*minima*)	estimated	6a
	A M A F	0.035 0.037		(*maxima*)	estimated	6b
Inhalation Rate (m^3/day)	A M A F	0.54 0.52		(*minima*)	estimated	7a
	A M A F	1.40 1.22		(*maxima*)	estimated	7b
Surface Area (cm^2)	A M A F	1,280 1,230		(*minima*)	estimated	8a
	A M A F	2,920 2,590		(*maxima*)	estimated	8b

Dietary Composition				Winter		Reference	Note No.
sedges native grasses corn kernels animal other				63 11 22 0.01 4	North Carolina/lake (% volume; crop and gizzard contents)	Yelverton & Quay, 1959	

Canada Goose (*Branta canadensis*)

Dietary Composition	Spring	Summer	Fall	Winter	Location/Habitat (measure)	Reference	Note No.
Equisetum sp. (shoot)	9.2				Ontario, Canada/bay	Prevett et al., 1985	
Triglochin palustris (root)	3.4				(% dry weight; esophagus and proventriculus contents)		
grasses (root)	23.4						
(shoot)	2.1						
sedges (shoot)	25.3						
(root)	5.3						
(reed)	17.9						
Plantago maritima (root)	6.5						
unidentified plants	6.1						
invertebrates	0.7						
corn			23		Wisconsin/marsh	Craven & Hunt, 1984	
unidentified plants			8.6				
alfalfa			10.4		(% dry volume; gizzard and proventriculus contents)		
Gramineae			12.6				
oats			25.1				
Setaria lutescens			8.4				
Trifolium repens			10.9				

Population Dynamics			Range	Location (subspecies)/ habitat[a]	Reference	Note No.
Home Range Size	A F & brood	983 ± 822 SD ha	290 - 2,830	Washington (*moffitti*)/river	Eberhardt et al., 1989a	
	A F & brood	8.8 ± 4.4 SD km	2.8 - 18.1	Washington (*moffitti*)/river	Eberhardt et al., 1989a	

Canada Goose (*Branta canadensis*)

Population Dynamics	Age/Sex/ Cond./Seas.	Mean	Range	Location (subspecies)/ habitat[a]	Reference	Note No.
Population Density	summer		0.02-12.4 nests/ha	various locations	Cooper, 1978	9
		16.6 nests/ha		Montana (*moffitti*)/ on 0.2-0.8 ha island	Geis, 1956	
		1.3 nests/ha		Montana (*moffitti*)/ on 8-121 ha island		
		0.35 nests/ha		Alaska (*leucopus*)/ island preferred habitat	Byrd & Woolington, 1983	
	fall	22 birds/ha		Missouri/wildlife refuge	Humburg et al., 1985	
	winter	4 birds/ha		Missouri/wildlife refuge	Humburg et al., 1985	
Clutch Size		4.7		Alaska (*minima*)	Spencer et al., 1951	10
		5.6 ± 0.1 SE	2 - 8	Alaska (*leucopa*)	Byrd & Woolington, 1983	
		4.6		Ontario, Canada (*interior*)	Raveling & Lumsden, 1977	2
		5.6		Alabama, Georgia (*maxima*)	Combs et al., 1984	
Clutches/Year		1		Missouri	Brakhage, 1985	
Days Incubation		25		NS (*minima*)	Laidley, 1939	10
		28		Missouri (*maxima*)	Brakhage, 1965	
Age at Fledging (days)		40-46		Alaska (*minima*)	Mickelson, 1973	11
		55		NS (*leucopa*)	Lee (pers. comm.) in Byrd & Woolington, 1983	
		63		Ontario, Canada (*interior*)	Hanson, 1965	11
		71-73		Michigan (*maxima*)	Sherwood, 1965	11
Percent Nests Successful		91	89 - 93	Alaska/island (*leucopa*)	Byrd & Woolington, 1983	
		44	27 - 64	Alabama, Georgia (*maxima*)	Combs et al., 1984	
Number Fledge per Active Nest		2.19 ± 2.42 SD	0 - 7	Washington (*moffitti*)	Eberhardt et al., 1989b	

Canada Goose (*Branta canadensis*)

Population Dynamics	Age/Sex/ Cond./Seas.	Mean	Range	Location (subspecies)/ habitat[a]	Reference	Note No.
Number Fledge per Successful Nest		4.0 ± 0.008 SE	1 - 7	Alaska (*leucopa*)	Byrd & Woolington, 1983	
		2.2		IL, WI (*interior*)	Hardy & Tacha, 1989	12
		3.9 ± 1.9 SD	1 - 7	Washington (*moffitti*)	Eberhardt et al., 1989b	
Age at Sexual Maturity	B	2 - 3		Northwest Territories (smaller subspecies)	MacInnes & Dunn, 1988	
	F	4 - 5	> 2	Manitoba, Canada (*interior*)	Moser & Rusch, 1989	
	M	2 - 3	> 1	Missouri (*maxima*)	Brakhage, 1965	
	F	2 - 3	> 2			
Annual Mortality Rates (percent)	A B	35.9		Alaska (*minima*)	Nelson & Hansen, 1959	11
	J B	46.0				
	A B	28 ± 0.8 SD		California, Nevada (*moffitti*)	Rienecker, 1987	
	J B	49 ± 3.7 SD				
	A B	22.9		Ohio (*maxima*)	Cummings, 1973	11
	J B	37.0				

Seasonal Activity			End	Location (subspecies)	Reference	Note No.
Mating/Laying	late February	March - April	mid-May	Georgia, Alabama (*maxima*)	Combs et al., 1984	
	early March	late March		OR, WA, CA (*moffitti*)	McCabe, 1979; Bellrose, 1976	
	mid-March	late March - April	May	Montana (*moffitti*)	Geis, 1956	
	early April	mid-April	early May	Idaho (*moffitti*)	Steel et al., 1957	
	early April		mid-April	Ontario, Canada (*maxima*)	Mainguy & Thomas, 1985	
	late May	late May	early June	Alaska (*leucopa*)	Byrd & Woolington, 1983	
Hatching	March	April - May	early June	Georgia, Alabama (*maxima*)	Combs et al., 1984	
	mid-April	late April - May	late May	Montana (*moffitti*)	Geis, 1956	
	early May	mid-May	late June	Idaho (*moffitti*)	Steel et al., 1957	
		early July		Alaska (*leucopa*)	Byrd & Woolington, 1983	

Canada Goose (*Branta canadensis*)

Seasonal Activity	Begin	Peak	End	Location (subspecies)	Reference	Note No.
Molt (fall)	mid-June mid-July late June	mid-August	late August late October	Idaho (*moffitti*) Alaska (*leucopa*) Illinois (*interior*)	Steel et al., 1957 Byrd & Woolington, 1983 Williams & Kendeigh, 1982	
	mid-Sept. October February late March	November early November early March early April	mid-December	arrive south Illinois (*interior*) arrive CO, TX (*parvipes*) leave Illinois (*interior*) leave Minnesota (*maxima*)	Bell & Klimstra, 1970 Grieb, 1970 Bell & Klimstra, 1970 Raveling, 1978b	

1 Weights estimated from graph.
2 Cited in Dunn and MacInnes (1987).
3 Estimated range of existence to maximum free-living metabolism at typical breeding ground (Ontario, Canada in spring and summer) and at typical wintering ground (south Illinois in fall and winter). Estimated using regression equations developed by the authors, measures of metabolic rates at temperatures from -40 to 41 °C, and temperatures typical for the season and location.
4 Estimated using equation 3-37 (Nagy, 1987) and body weights from (a) Raveling (1979); (b) Raveling (1968); and (c) Brakhage (1965).
5 Reported as grams dry weight of feed; corrected to grams wet weight of feed using the measured moisture content of 11 percent (on average) of the feed items (i.e., corn, sunflower seeds, wheat, and milo).
6 Estimated using equation 3-15 (Calder and Braun, 1983) and body weights from (a) Raveling (1979) and (b) Brakhage (1965).
7 Estimated using equation 3-19 (Lasiewski and Calder, 1971) and body weights from (a) Raveling (1979) and (b) Brakhage (1965).
8 Estimated using equation 3-21 (Meeh, 1879 and Rubner, 1883, as cited in Walsberg and King, 1978) and body weights from (a) Raveling (1979) and (b) Brakhage (1965).
9 Summarizing several studies, cited in Byrd & Woolington (1983).
10 Cited in Palmer (1976).
11 Cited in Bellrose (1976).
12 For parents older than 5 years of age.

References (including Appendix)

Akesson, T. R.; Raveling, D. G. (1981) Endocrine and body weight changes of nesting and non-nesting Canada geese. Biol. Reprod. 25: 792-804.

Balham, R. W. (1954) The behavior of the Canada goose (*Branta canadensis*) in Manitoba [Ph.D. dissertation]. Columbia, MO: University of Missouri.

Bell, R. Q.; Klimstra, W. D. (1970) Feeding activities of Canada geese (*Branta canadensis interior*) in southern Illinois. Trans. Ill. State. Acad. Sci. 63: 295-304.

Bellrose, F. C. (1976) Ducks, geese, and swans of North America. Harrisburg, PA: The Stackpole Co.

Best, R. G.; Fowler, R.; Hause, D., et al. (1982) Aerial thermal infrared census of Canada geese in South Dakota. Photogr. Eng. Remote Sens. 48: 1869-1877.

Brakhage, D. H. (1985) A second brood by Canada geese. Wilson Bull. 97: 387-388.

Brakhage, D. H.; Baskett, T. S.; Graber, D. A., et al. (1987) Impacts of a new reservoir on resident Canada geese. Wildl. Soc. Bull. 15: 192-196.

Brakhage, G. K. (1965) Biology and behavior of tub-nesting Canada geese. J. Wildl. Manage. 29: 751-771.

Buchsbaum, R.; Valiela, I. (1987) Variability in the chemistry of estuarine plants and its effects on feeding by Canada geese. Oecologia (Berlin) 73: 146-153.

Buchsbaum, R.; Valiela, I.; Teal, J. M. (1981) Grazing by Canada geese and related aspects of the chemistry of salt marsh grasses. Colonial Waterbirds 4: 126-131.

Buchsbaum, R.; Valiela, I.; Swain, T. (1984) The role of phenolic compounds and other plant constituents in feeding by Canada geese in a coastal marsh. Oecologia (Berlin) 63: 343-349.

Bultsma, P. M.; Linder, R. L.; Kuck, T. L. (1979) Reproductive success of giant Canada geese in western South Dakota. Proc. SD Acad. Sci. 58: 35-38.

Byrd, G. V.; Woolington, D. W. (1983) Ecology of Aleutian Canada geese at Buldir Island, Alaska. U.S. Fish Wildl. Serv. Spec. Sci. Rep. No. 253.

Calder, W. A.; Braun, E. J. (1983) Scaling of osmotic regulation in mammals and birds. Am. J. Physiol. 244: R601-R606.

Chapman, J. A. (1970) Weights and measurements of dusky Canada geese wintering in Oregon. Murrelet 51: 34-37.

Chapman, J. A.; Henny, C. J.; Wight, H. M. (1969) The status, population dynamics, and harvest of the dusky Canada goose. Wildl. Monogr. 18.

Coleman, T. S.; Boag, D. A. (1987) Foraging characteristics of Canada geese on the Nisutlin River delta, Yukon. Can. J. Zool. 65: 2358-2361.

Collias, N. E.; Jahn, L. R. (1959) Social behavior and breeding success in Canada geese (*Branta canadensis*) confined under semi-natural conditions. Auk 76: 478-509.

Combs, D. L.; Ortego, B.; Kennamer, J. E. (1984) Nesting biology of a resident flock of Canada geese. Proc. Annu. Conf. Southeast. Assoc. Fish Wildl. Agencies 38: 228-238.

Cooper, J. A. (1978) Canada geese at Marshy Point, Manitoba. Wildl. Monogr. 51: 1-87.

Cornley, J. E.; Campbell, B. H.; Jarvis, R. L. (1985) Productivity, mortality and population status of dusky Canada geese. Trans. North Am. Wildl. Nat. Resour. Conf. 50: 540-548.

Craven, S. R. (1981) The Canada goose (*Branta canadensis*)--an annotated bibliography. U.S. Fish Wildl. Serv. Spec. Sci. Rep. No. 231.

Craven, S. R.; Hunt, R. A. (1984) Fall food habits of Canada geese in Wisconsin. J. Wildl. Manage. 48: 169-173.

Cummings, G. E. (1973) The Tennessee Valley population of Canada geese. U.S. Fish Wildl. Serv. Unpublished Report.

Dey, N. H. (1966) Canada goose production and population stability, Ogden Bay waterfowl management area, Utah. Utah State Dept. Fish and Game Publ. 66-7.

Dow, J. S. (1943) A study of nesting Canada geese in Honey Lake Valley, California. Calif. Fish and Game 29: 3-18.

Dunn, E. H.; MacInnes, C. D. (1987) Geographic variation in clutch size and body size of Canada geese. J. Field Ornithol. 58: 355-371.

Eberhardt, L. E.; Anthony, R. G.; Rickard, W. H. (1989a) Movement and habitat use by Great Basin Canada goose broods. J. Wildl. Manage. 53: 740-748.

Eberhardt, L. E.; Anthony, R. G.; Rickard, W. H. (1989b) Survival of juvenile Canada geese during the rearing period. J. Wildl. Manage. 53: 372-377.

Eberhardt, L. E.; Books, G. G.; Anthony, R. G.; et al. (1989c) Activity budgets of Canada geese during brood rearing. Auk 106: 218-224.

Estel, B. L. (1983) Winter weights of Canada geese in southern Illinois during 1982-83. Ill. Dep. Conserv. Per. Rep. No. 38.

Fitzner, R. E.; Rickard, W. H. (1983) Canada goose nesting performance along the Hanford Reach of the Columbia River, 1971-1981. Northwest Sci. 57: 267-272.

Geis, M. B. (1956) Productivity of Canada geese in the Flathead Valley, Montana. J. Wildl. Manage. 20: 409-419.

Geis, A. D.; Taber, R. D. (1963) Measuring hunting and other mortality. In: Mosby, H. S., ed. Wildlife investigational techniques. Washington, DC: The Wildlife Society; pp. 284-298.

Grieb, J. R. (1970) The shortgrass prairie Canada goose populations. Wildl. Monogr. 22: 4-49.

Gulden, N. A.; Johnson, L. L. (1968) History, behavior and management of a flock of giant Canada geese in southeastern Minnesota. In: Hine, R. L.; Schoenfeld, C., eds. Canada goose management. 1st ed. Madison, WI: Dembar Educ. Res. Serv.; pp. 58-71.

Hanson, H. C. (1965) The giant Canada goose. Carbondale, IL: Southern Illinois University Press.

Hanson, H. C.; Smith, R. H. (1950) Canada geese of the Mississippi flyway with special reference to an Illinois flock. Ill. Nat. Hist. Surv. Bull. 25: 67-210.

Hanson, W. C.; Eberhardt, L. L. (1971) A Columbia River Canada goose population, 1950-1970. Wildl. Monogr. 28.

Hardy, J. D.; Tacha, T. C. (1989) Age-related recruitment of Canada geese from the Mississippi Valley population. J. Wildl. Manage. 53: 97-98.

Harvey, W. F., IV; Maleki, R. A.; Soutiere, E. C. (1988) Habitat use by foraging Canada geese in Kent County, Maryland. Trans Northeast Sect. Wildl. Soc. 45: 1-7.

Hilley, J. D. (1976) Productivity of a resident giant Canada goose flock in northwestern South Dakota [master's thesis]. Brookings, SD: South Dakota State University.

Humburg, D. D.; Graber, D. A.; Babcock, K. M. (1985) Factors affecting autumn and winter distribution of Canada geese. Trans. North Am. Wildl. Nat. Resour. Conf. 50: 525-539.

Jensen, G. H.; Nelson, A. L. (1948) (cited in Palmer, 1962) U.S. Fish Wildl. Serv., Spec. Sci. Rept.-Wildlife no. 60.

Johnson, D. H.; Timm, D. E.; Springer, P. F. (1979) Morphological characteristics of Canada geese in the Pacific flyway. In: Jarvis, R. L.; Bartonek, J. C., eds. Management and biology of flyway geese: a symposium; February 16, 1979; Portland, OR. Corvallis, OR: OSU Book Stores; pp. 56-68.

Joyner, D. E.; Arthur, R. D.; Jacobson, B. N. (1984) Winter weight dynamics, grain consumption and reproductive potential in Canada geese. Condor 86: 275-280.

Korschgen, L. J. (1955) Fall foods of waterfowl in Missouri. Missouri Dept. Conserv. P-R Ser. 14.

Kortright, F. H. (1942) The ducks, geese, and swans of North America. Harrisburg, PA: The Stackpole Co.

Kortright, F. H. (1955) The ducks, geese, and swans of North America. Harrisburg, PA: The Stackpole Co. and Washington, DC: Wildlife Management Institute.

Laidley (1939) (cited in Palmer, 1962). Avicultural Mag. 5th Ser.: 102-103.

Lasiewski, R. C.; Calder, W. A. (1971) A preliminary allometric analysis of respiratory variables in resting birds. Resp. Phys. 11: 152-166.

Lebeda, C. S.; Ratti, J. T. (1983) Reproductive biology of Vancouver Canada geese on Admiralty Island, Alaska. J. Wildl. Manage 47: 297-306.

LeBlanc, Y. (1987a) Intraclutch variation in egg size of Canada geese. Can. J. Zool. 65: 3044-3047.

LeBlanc, Y. (1987b) Relationships between sex of gosling and position in the laying sequence, egg mass, hatchling size, and fledgling size. Auk 104: 73-76.

LeBlanc, Y. (1987c) Egg mass, position in the laying sequence, and brood size in relation to Canada goose reproductive success. Wilson Bull. 99: 663-672.

Leopold, A. S.; et al. (1981) North American game birds and mammals. New York, NY: Charles Scribner & Sons.

MacInnes, C. D. (1962) Nesting of small Canada geese near Eskimo Point, Northwest Territories. J. Wildl. Manage. 26: 247-256.

MacInnes, C. D.; Davis, R. A.; Jones, R. N., et al. (1974) Reproductive efficiency of McConnell River small Canada geese. J. Wildl. Manage. 38: 686-707.

MacInnes, C. D.; Dunn, E. H. (1988) Estimating proportion of an age class nesting in Canada geese. J. Wildl. Manage. 52: 421-423.

Mainguy, S. K.; Thomas, V. G. (1985) Comparisons of body reserve buildup and use in several groups of Canada geese. Can. J. Zool. 63: 1765-1772.

Manning, T. H. (1978) Measurements and weights of eggs of the Canada goose, (*Branta canadensis*), analyzed and compared with those of other species. Can. J. Zool. 56: 676-687.

Martin, F. W. (1964) Behavior and survival of Canada geese in Utah. Utah State Dep. Fish and Game Inform. Bull. 64-7.

Martin, A. C.; Zim, H. S.; Nelson, A. L. (1951) American wildlife and plants. New York, NY: McGraw-Hill Book Company, Inc.

McCabe, T. R. (1979) Productivity and nesting habitat of great basin Canada geese, Umatilla, Oregon. In: Jarvis, R. L.; Bartonek, J. C., eds. Management and biology of flyway geese: a symposium; February 16, 1979; Portland, OR. Corvallis, OR: OSU Book Stores; pp. 117-129.

McLandress, M. R.; Raveling, D. G. (1981) Changes in diet and body composition of Canada geese before spring migration. Auk 98: 65-79.

Meeh, K. (1879) Oberflachenmessungen des mensclichen Korpers. Z. Biol. 15: 426-458.

Mickelson, P. G. (1973) Breeding biology of cackling geese (*Branta canadensis minima* Ridgeway) and associated species on the Yukon-Kuskokwim Delta, Alaska [Ph.D. dissertation]. Ann Arbor, MI: University of Michigan.

Miller, A. W.; Collins, B. D. (1953) A nesting study of Canada geese on Tule Lake and Lower Klamath National Wildlife Refuges, Siskiyou County, California. Calif. Fish and Game 39: 385-396.

Moffitt, J. (1931) The status of the Canada goose in California. Calif. Fish and Game 17: 20-26.

Moser, T. J.; Rusch, D. H. (1989) Age-specific breeding rates of female *interior* Canada geese. J. Wildl. Manage. 53: 734-740.

Murphy, A. J.; Boag, D. A. (1989) Body reserve and food use by incubating Canada geese. Auk 106: 439-446.

Nagy, K. A. (1987) Field metabolic rate and food requirement scaling in mammals and birds. Ecol. Monogr. 57: 111-128.

National Geographic Society. (1987) Field guide to the birds of North America. Washington, DC: National Geographic Society.

Naylor, A. E. (1953) Production of the Canada goose on Honey Lake Refuge, Lassen County, California. Calif. Fish and Game 39: 83-94.

Nelson, A. L.; Martin, A. C. (1953) Gamebird weights. J. Wildl. Manage. 17: 36-42.

Nelson, U. C.; Hansen, H. A. (1959) The cackling goose--its migration and management. Trans. North Am. Wildl. Nat. Resour. Conf. 24: 174-187.

Owen, M. (1980) Wild geese of the world. Their life history and ecology. London, UK: B. T. Batsford Ltd.

Palmer, R. S. (1962) Handbook of North American birds: v. 1. New Haven, CT: Yale University Press.

Palmer, R. S. (1976) Handbook of North American birds: v. 2. New Haven, CT: Yale University Press.

Peach, H. C.; Thomas, V. G. (1986) Nutrient composition of yolk in relation to early growth of Canada geese. Physiol. Zool. 59: 344-356.

Prevett, J. P.; Marshall, I. F.; Thomas, V. G. (1985) Spring foods of snow and Canada geese at James Bay. J. Wildl. Manage. 49: 558-563.

Ratti, J. T.; Timm, D. E.; Robards, F. L. (1977) Weights and measurements of Vancouver Canada geese. Bird Banding 48: 354-357.

Raveling, D. G. (1968) Weights of *Branta canadensis interior* during winter. J. Wildl. Manage. 32: 412-414.

Raveling, D. G. (1978a) Morphology of the cackling Canada goose. J. Wildl. Manage. 42: 897-900.

Raveling, D. G. (1978b) Dynamics of distribution of Canada geese in winter. Trans. North Am. Wildl. Nat. Resour. Conf. 43: 206-225.

Raveling, D. G. (1979) The annual cycle of body composition of Canada geese with special reference to control of reproduction. Auk 96: 234-252.

Raveling, D. G. (1981) Survival, experience, and age in relation to breeding success of Canada geese. J. Wildl. Manage. 45: 817-829.

Raveling, D. G.; Lumsden, H. G. (1977) Nesting ecology of Canada geese in the Hudson Bay lowlands of Ontario: evolution and population regulation. U.S. Fish Wildl. Res. Rep. 98; pp. 1-77.

Rienecker, W. C. (1987) Population trends, distribution, and survival of Canada geese in California and western Nevada. Calif. Fish and Game 73: 21-36.

Rienecker, W. C.; Anderson, W. (1960) A waterfowl nesting study on Tule Lake and Lower Klamath National Wildlife Refuges, 1957. Calif. Fish and Game 46: 481-506.

Rubner, M. (1883) Uber den Einfluss der Korpergrosse auf Stoff- und Kraftweschsel. Z. Biol. 19: 535-562.

Samuel, M. D.; Rusch, D. H.; Craven, S. (1990) Influence of neck bands on recovery and survival rates of Canada geese. J. Wildl. Manage. 54: 45-54.

Sedinger, J. S. (1986) Growth and development of Canada goose goslings. Condor 88: 169-180.

Sedinger, J. S.; Raveling, D. G. (1984) Dietary selectivity in relation to availability and quality of food for goslings of cackling geese. Auk 101: 295-306.

Sedinger, J. S.; Raveling, D. G. (1986) Timing of nesting by Canada geese in relation to the phenology and availability of their food plants. J. Anim. Ecol. 55: 1083-1102.

Sherwood, G. A. (1965) Canada geese of the Seney National Wildlife Refuge. Minneapolis, MN: U.S. Fish Wildl. Serv. Compl. Rep., Wildl. Manage. Stud. 1, 2.

Sherwood, G. A. (1966) Flexible plastic collars compared to nasal discs for marking geese. J. Wildl. Manage. 30: 853-855.

Smith, R. H.; Sutton, E. L. (1953) Waterfowl breeding ground survey in northern Alberta, the Northwest Territories, and the Yukon. In: Waterfowl population and breeding conditions. U.S. Fish Wildl. Serv. and Canadian Wildl. Serv.; Spec. Sci. Rep., Wildl. 25; pp. 7-15.

Smith, R. H.; Sutton, E. L. (1954) Waterfowl breeding ground survey in northern Alberta, the Northwest Territories, and the Yukon. In: Waterfowl population and breeding conditions. U.S. Fish Wildl. Serv. and Canadian Wildl. Serv.; Spec. Sci. Rep., Wildl. 27; pp. 11-20.

Spencer, D. L., et al. (1951) America's greatest Brant goose nesting area. Trans. North Am. Wildl. Nat. Resour. Conf. 16: 290-295.

Steel, P. E., et al. (1957) Canada goose production at Gray's Lake, Idaho, 1949-1951. J. Wildl. Manage. 21: 38-41.

Szymczak, M. R. (1975) Canada goose restoration along the foothills of Colorado. Colo. Dept. Nat. Resources Wildl. Div. Tech. Publ. 31.

Thomas, V. G.; Peach Brown, H. C. (1988) Relationships among egg size, energy reserves, growth rate, and fasting resistance of Canada goose goslings from southern Ontario. Can. J. Zool. 66: 957-964.

Thomas, V. G.; Mainguy, S. K.; Prevett, J. P. (1983) Predicting fat content of geese from abdominal fat weight. J. Wildl. Manage. 47: 1115-1119.

Thornburg, D. D.; Tacha, T. C.; Estel, B. L., et al. (1988) Spatial and temporal variation in winter weights of Mississippi Valley Canada geese. In: Weller, M. W., ed. Waterfowl in winter. Minneapolis, MN: University of Minnesota Press; pp. 271-275.

Timm, D. (1974) Status of lesser Canada geese in Alaska. Juneau, AK: Alaska Dep. Fish and Game; Pacific Flyway Tech. Com. Rep. 38-50.

Trainer, C. E. (1959) The 1959 western Canada goose (*Branta canadensis occidentalis*) study of the Copper River Delta, Alaska. U.S. Bur. Sport Fish. Wildl. Annu. Waterfowl Rep., Alaska (mimeo).

Vaught, R. W.; Kirsch, L. M. (1966) Canada geese of the eastern prairie population, with special reference to the Swan Lake flock. Missouri Dept. Conserv. Tech. Bull. 3.

Walsberg, G. E.; King, J. R. (1978) The relationship of the external surface area of birds to skin surface area and body mass. J. Exp. Biol. 76: 185-189.

West, W. L. (1982) Annual cycle of the giant Canada goose flock at the Trimble Wildlife Area [master's thesis]. Columbia, MO: University of Missouri.

Will, G. C. (1969) Productivity of Canada geese in Larimer County, Colorado, 1967-1968. [master's thesis]. Fort Collins, CO: Colorado State University.

Williams, J. E.; Kendeigh, S. C. (1982) Energetics of the Canada goose. J. Wildl. Manage. 46: 588-600.

Yelverton, C. S.; Quay, T. L. (1959) Food habits of the Canada goose at Lake Mattamuskeet, North Carolina. North Carolina Wildlife Resources Commission.

Yocom, C. F. (1972) Weights and measurements of Taverner's and Great Basin Canada geese. Murrelet 53: 33-34.

2.1.3. Mallard (surface-feeding ducks)

Order *Anseriformes*, Family *Anatidae*. Surface-feeding ducks are the most familiar ducks of freshwater and saltwater wetlands. They feed by dabbling and tipping up in shallow water, often filtering through soft mud for food. They feed primarily on seeds of aquatic plants and cultivated grains, although they also consume aquatic invertebrates, particularly during the breeding season (Jorde et al., 1983; Swanson et al., 1985). All species have a bright colored patch of feathers on the trailing edge of each wing, and the overall plumage of the males is more colorful than that of the females. Dabbling ducks range in size from the green-winged teal (average 37 cm bill tip to tail tip) to the northern pintail (average 66 cm).

Selected species

The mallard (*Anas platyrhynchos*) feeds mostly on aquatic plants, seeds, and aquatic invertebrates, depending on the season, and forages in ponds and wetlands by dabbling and filtering through sediments. It is widespread throughout most of the United States and is the most abundant of the United States ducks (USFWS, 1991). In the past decade, however, its numbers have declined markedly across its principal range in the mid-continental region because of habitat degradation and drought (USFWS, 1991). Mallards interbreed with domestic ducks and black ducks (*Anas rubripes*).

Body size. Mallards average 58 cm from bill tip to tail tip. Male mallards are generally heavier than females (Delnicki and Reinecke, 1986; Whyte and Bolen, 1984; see table). Female mallards lose weight during the laying and incubation periods; males lose weight from their spring arrival through the peak of the breeding season and then gain weight while the females are incubating (Lokemoen et al., 1990a).

Habitat. Wintering mallards prefer natural bottomland wetlands and rivers to reservoirs and farm ponds (Heitmeyer and Vohs, 1984); water depths of 20 to 40 cm are optimum for foraging (Heitmeyer, 1985, cited in Allen, 1987). The primary habitat requirement for nesting appears to be dense grassy vegetation at least a half meter high (Bellrose, 1976). Mallards prefer areas that provide concealment from predators such as seeded cover (fields established on former croplands) (Klett et al., 1988; Lokemoen et al., 1990b), cool-season introduced legumes and grasses (Duebbert and Lokemoen, 1976), and idle grassland with tall, dense, rank cover in the area (Duebbert and Kantrud, 1974). Nests usually are located within a few kilometers of water, but if choice nesting habitat is not available nearby, females may nest further away (Bellrose, 1976; Duebbert and Lokemoen, 1976).

Food habits. In winter, mallards feed primarily on seeds but also on invertebrates associated with leaf litter and wetlands, mast, agricultural grains, and to a limited extent, leaves, buds, stems, rootlets, and tubers (Goodman and Fisher, 1962; Heitmeyer, 1985, cited in Allen, 1987). In spring, females shift from a largely herbivorous diet to a diet of mainly invertebrates to obtain protein for their prebasic molt and then for egg production (Swanson and Meyer, 1973; Swanson et al., 1979; Swanson et al., 1985; Heitmeyer, 1988b). Laying females consume a higher proportion of animal foods on the breeding

grounds than do males or nonlaying females (Swanson et al., 1985). The animal diet continues throughout the summer, as many females lay clutches to replace destroyed nests (Swanson et al., 1979; Swanson et al., 1985). Ducklings also consume aquatic invertebrates almost exclusively, particularly during the period of rapid growth (Chura, 1961). Mallards concentrate in wetlands at night, apparently feeding on emerging insects (Swanson and Meyer, 1973). Flocks may feed in unharvested grain fields and stubble fields during fall and winter (Dillon, 1959). During periods of food shortage, fat reserves are used as an energy source. During breeding, females continue to feed but also use fat to meet the demands of egg production; females may lose 25 percent of their body mass (in fat) during laying and early incubation (Krapu, 1981).

Molt. Female mallards molt into basic plumage in late winter or early spring, except for the wing molt, which is delayed until about the time broods are fledged. In males, head-body-tail molt commences in early summer and overlaps or is followed by the wing molt. Mallards generally are flightless for about 25 days during the wing molt (Palmer, 1976).

Migration. Although the mallard winters in all four waterfowl flyways of North America (i.e., Pacific, Central, Mississippi, and Atlantic), the Mississippi flyway (alluvial valley from Missouri to the Gulf of Mexico) contains the highest numbers (Bellrose, 1976). Human creation and alteration of water bodies and plant communities have changed the migration and wintering patterns of mallards; in North America the ducks winter farther north than in the past (Jorde et al., 1983). Mallards tend to arrive at their wintering grounds in the Mississippi Valley in mid-September through early November and depart for their northerly breeding grounds again in March (Fredrickson and Heitmeyer, 1988). Adult females that reproduce successfully are likely to return to the same nesting ground the following year (Lokemoen et al., 1990a, 1990b).

Breeding activities and social organization. Older females arrive at breeding grounds earlier than yearling birds, which probably increases their chances of reproductive success because they can select the best nest sites (Lokemoen et al., 1990b). First clutches are generally finished by mid-April in the southern part of the breeding range and late April to May in the northern United States (Palmer, 1976). High rates of nest failure require females to renest persistently to reproduce successfully (Swanson et al., 1985). Average clutch size decreases as the season progresses because the clutch size of renesting females is smaller than initial clutches (Eldridge and Krapu, 1988; Lokemoen et al., 1990b). Older females produce larger clutches than do yearlings (Lokemoen et al., 1990a). Mallards mate for one breeding season, and males typically leave the females at the onset of incubation (Palmer, 1976). Females remain with the brood until fledging. Mallards are serially monogamous and thus remate annually (Palmer, 1976).

Home range and resources. Each pair of mallards uses a home range, and the drake commonly establishes a territory that he defends against other mallards (Bellrose, 1976). Home-range size depends on habitat, in particular the type and distribution of water habitats (e.g., prairie potholes, rivers), and population density (Bellrose, 1976; Dwyer et al., 1979; Kirby et al., 1985).

Population density. Mallard densities during the breeding season are positively correlated with availability of terrestrial cover for nesting and with availability of wetlands and ponds that provide the aquatic diet of mallards (Pospahala et al., 1974). Availability of suitable wetland habitat for breeding and wintering depends on environmental conditions (e.g., rainfall) (Heitmeyer and Vohs, 1984; Lokemoen et al., 1990a). Average densities of breeding mallards in the prairie pothole region range from 0.006 to 0.67 pairs per hectare (Duebbert and Kantrud, 1974; Duebbert and Lokemoen, 1976; Kantrud and Stewart, 1977; Lokemoen et al., 1990b). Mallards attain their highest densities in prairie and parkland of the southern prairie provinces and in the Cooper River and Athabasca River deltas of Canada (Johnson and Grier, 1988).

Population dynamics. Nest success or failure is an important factor affecting mallard populations. Mammalian predation is the main cause of nest failure, followed by human disturbance (e.g., farming operations) and adverse weather conditions (Klett et al., 1988; Lokemoen et al., 1988). Mammalian predators include fox, badger, and skunk; crows also prey on mallard nests (Johnson et al., 1988). Mallards usually renest if the first nest fails (Palmer, 1976). Juvenile survival depends on food and preferred habitat availability, factors that in turn are affected by environmental conditions. For example, high rainfall is related to increased wetland area, which is positively correlated with duckling growth (Lokemoen et al., 1990a). Annual adult mortality rates vary with year, location, hunting pressure, age, and sex. Females suffer greater natural mortality rates (e.g., typical values of 40 to 50 percent) than do males (e.g., typical values of 30 to 40 percent) (Chu and Hestbeck, 1989). By fall, there is a higher proportion of males than females in most populations (Bellrose, 1976). Immature mortality rates of 70 percent have been recorded in many areas, although lower immature mortality rates are more common (Bellrose, 1976; Chu and Hestbeck, 1989). Annual mortality rates also are greater in areas with higher hunting pressure (Bellrose, 1976).

Similar species (from general references)

- The American black duck (*Anas rubripes*) is only present in the wooded parts of northeastern and north central United States. It nests near woodland lakes and streams or in freshwater and tidal marshes. It is similar in size (58 cm) to mallards using the same habitats.

- The northern pintail (*Anas acuta*) is widespread, occurring in most parts of North America and breeding throughout Canada and the north central United States. Although formerly farily abundant, North American pintail populations have declined dramatically during the past decade (USFWS, 1991). It prefers marshes and open areas with ponds and lakes. Pintails average slightly longer (66 cm) than mallards.

- The gadwall (*Anas strepera*) (51 cm) occurs throughout most of the United States. In Canada, its breeding range is limited to the south central potholes region. It is more common in the west than in the east.

- The American wigeon (*Anas americana*) (48 cm) breeds throughout most of Canada and in the prairie pothole regions of the United States. It winters

along both the east and west coasts of the United States as well as farther south into Mexico.

- Northern shovelers (*Anas clypeata*) (48 cm), inhabitants of marshes, ponds, and bays, breed throughout mid to western Canada and the prairie pothole regions of the United States. They winter along the gulf coast, southern Atlantic coast, in Texas, and a few other southwestern states as well as throughout Mexico.

- Blue-winged teal (*Anas discors*) (39 cm) are fairly common in open country in marshes and on ponds and lakes. Breeding populations occur throughout the central United States and Canada, but wintering populations are restricted to Atlantic and Pacific coastal areas.

- The green-winged teal (*Anas crecca*) (37 cm) is the smallest of the dabbling ducks. *A. c. carolinensis* is the most common subspecies in the United States. It breeds throughout most of Canada and the prairie pothole region of the United States. It overwinters in the southern half of the United States and in Mexico.

- Cinnamon teal (*Anas cyanoptera*) (41 cm) breeding populations are restricted to the western United States and Mexico, with few reaching southern Canada. Some populations in California and Mexico are year-round residents.

General references

Allen (1987); National Geographic Society (1987); Pospahala et al. (1974); Palmer (1976); Bellrose (1976).

Mallard Duck (*Anas platyrhynchos*)

Factors	Age/Sex/ Cond./Seas.	Mean	Range or (95% CI of mean)	Location	Reference	Note No.
Body Weight (g)	A M	1,225	up to 1,814	throughout North America	Nelson & Martin, 1953	
	A F	1,043	up to 1,633			
	A M winter	1,246 ± 108 SD		western Mississippi (alluvial valley)	Delnicki & Reinecke, 1986	
	A F winter	1,095 ± 106 SD				
	A M winter	1,237 ± 118 SD		Texas	Whyte & Bolen, 1984	
	A F winter	1,088 ± 105 SD				
	A F spring	1,197 ± 105 SD		North Dakota	Krapu & Doty, 1979	
	egg	52.2	32.2 - 66.7	North Dakota	Eldridge & Krapu, 1988	
	at hatching	32.4 ± 2.4 SD		central North Dakota	Lokemoen et al., 1990a	
	B at 3.5 days	32.4 ± 2.4 SD		central North Dakota	Lokemoen et al., 1990b	
	F at 9.5 days	115 ± 37 SD		central North Dakota	Lokemoen et al., 1990b	
	F at 15.5 days	265 ± 92 SD				
	F at 30.5 days	401 ± 92 SD				
	F fledging at 56.0 days	740 ± 115 SD				
	M at 9.5 days	92 ± 12 SD		central North Dakota	Lokemoen et al., 1990b	
	M at 15.5 days	215 ± 5 SD				
	M at 30.5 days	460 ± 93 SD				
	M fledging at 56.0 days	817 ± 91 SD				
Body Fat (g lipid)	A M winter	174 ± 66 SD		Texas	Whyte & Bolen, 1984	
	A F winter	171 ± 56 SD				
	A F April	106 ± 34 SD		North Dakota	Krapu & Doty, 1979	
	Y F April	82 ± 37 SD				
	A F June	22 ± 22 SD				
	Y F June	9.6 ± 8.3 SD				

Mallard Duck (*Anas platyrhynchos*)

Factors	Age/Sex/ Cond./Seas.	Mean	Range or (95% CI of mean)	Location	Reference	Note No.
Metabolic Rate (kcal/kg-day)	A F basal A M basal	77 73			estimated	1
	A F winter A M winter	280 220		Texas	Whyte & Bolen, 1984	2
	A F free-living A M free-living	200 192	(94 - 424) (91 - 408)		estimated	3
Food Ingestion Rate (g/g-day)						4
Water Ingestion Rate (g/g-day)	A F A M	0.058 0.055			estimated	5
Inhalation Rate (m^3/day)	A F A M	0.42 0.48			estimated	6
Surface Area (cm^2)	A F A M	1,030 1,148			estimated	7

Dietary Composition					Location/Habitat (measure)	Reference	Note No.
adults:				Winter	Louisiana/coastal marsh and prairie	Dillon, 1959	
rice				24			
jungle rice				21			
brownseed paspalum				19	(% volume; gullet contents)		
barnyard grass				8.0			
red rice				8.0			
knot grass				6.5			
signal grass				2.5			
coast cockspur				1.9			
Mamaica sawgrass				1.3			
snails				1.0			
other				6.8			

Mallard Duck (*Anas platyrhynchos*)

Dietary Composition					Location/Habitat (measure)	Reference	Note No.
breeding female:	April	May	June		south central North Dakota/prairie potholes	Swanson et al., 1985	
(total animal)	(67.8)	(66.8)	(89.4)				
gastropods	trace	24.9	16.5				
insects	13.1	25.6	48.1		(% wet volume; esophagus contents)		
crustacea	7.9	15.1	13.9				
annelids	38.3	0.2	10.9				
misc. animal	8.5	1.0	-				
(total plant)	(32.2)	(33.2)	(10.6)				
seeds	28.7	28.7	10.6				
tubers	2.4	4.3	-				
stems	1.1	0.2	-				

Population Dynamics		Mean	Range	Location/Habitat		Note No.
Home Range Size (ha)	spring:					
	A F total	468 ± 159 SD	307 - 719	North Dakota/prairie potholes	Dwyer et al., 1979	
	A F laying	111 ± 76 SD	38 - 240			
	spring:					
	A F	540	40 - 1,440	Minnesota/wetlands, river	Kirby et al., 1985	
	A M	620	70 - 1,140			
Population Density (pairs/ha)	A B spring (area 1)	0.036	0.006 - 0.076	central North Dakota/range of 6 years of data from two different pothole areas	Lokemoen et al., 1990a	
	A B spring (area 2)	0.047	0.031 - 0.087			
Clutch Size	yearling	9.3 ± 1.7 SE		North Dakota/prairie potholes	Krapu & Doty, 1979	
	A	10.3 ± 1.1 SE				
		9	1 - 18	NS/NS	Bellrose, 1976	
Clutches /Year	if lost		up to 4.5	North Dakota/experimental ponds (nests purposely destroyed)	Swanson, unpublished in Swanson et al., 1985	
	if successful	1		North America/NS	Bellrose, 1976	
Days Incubation		26	23 - 29	NS/NS	Bent, 1923	8
		25		North Dakota/wetlands	Klett & Johnson, 1982	

Mallard Duck (*Anas platyrhynchos*)

Population Dynamics	Age/Sex Cond./Seas.	Mean	Range	Location/Habitat	Reference	Note No.
Age at Fledging (days)		52 - 60		NS/NS	Bellrose, 1976	
		56		central North Dakota/ potholes	Lokemoen et al., 1990a	
Percent Nests Successful		51 - 61		South Dakota/prairie potholes and fields	Duebbert & Lokemoen, 1976	
		9 - 10		eastern South Dakota/ potholes	Klett et al., 1988	
Number Fledge per Successful Nest		4.9		NS/NS	Cowardin & Johnson, 1979	9
		8.4		United States/NS	Bellrose, 1976	
Age at Sexual Maturity		1 yr		United States/NS	Krapu & Doty, 1979	
Annual Mortality Rates (percent)	A M	27.2		eastern-central flyway/NS	Bellrose, 1976	
	A F	38.2				
	A M fall	40.1 ± 3.1 SE	22 - 51	western mid-Atlantic/NS 1971 to 1985	Chu & Hestbeck, 1989	
	J M fall	41.1 ± 7.2 SE	31 - 59			
	A F fall	49.9 ± 3.3 SE	20 - 72			
	J F fall	48.8 ± 6.0 SE	15 - 68			
	A M fall	39.0 ± 2.3 SE	9 - 60	northeastern United States/NS 1971 to 1985	Chu & Hestbeck, 1989	
	J M fall	48.1 ± 5.3 SE	7 - 69			
	A F fall	51.5 ± 1.9 SE	33 - 64			
	J F fall	56.8 ± 3.2 SE	38 - 68			
Seasonal Activity			End			Note No.
Mating		May		CA, UT, MT, SD, NY, VT	Bellrose, 1976	
	early April	early May	mid-July	south central N Dakota	Krapu & Doty, 1979	
Hatching		June		NW Territory, Canada	Toft et al., 1984	

Mallard Duck (*Anas platyrhynchos*)

Seasonal Activity	Begin	Peak	End	Location	Reference	Note No.
Molt spring fall	December mid-Sept.		March November	Mississippi Valley	Fredrickson & Heitmeyer, 1988	
	mid-March mid-October	November	mid-May	arrive north central US leave northern US	Johnson et al., 1987 Palmer, 1976	

1 Estimated using equation 3-28 (Lasiewski and Dawson, 1967) and body weights from Nelson and Martin (1953).
2 Estimated daily existence energy at 0°C.
3 Estimated using equation 3-37 (Nagy, 1987) and body weights from Nelson and Martin (1953).
4 See Chapters 3 and 4 for methods of estimating food ingestion rates from free-living metabolic rate and dietary composition.
5 Estimated using equation 3-15 (Calder and Braun, 1983) and body weights from Nelson and Martin (1953).
6 Estimated using equation 3-19 (Lasiewski and Calder, 1971) and body weights from Nelson and Martin (1953).
7 Estimated using equation 3-21 (Meeh, 1879 and Rubner, 1883, as cited in Walsberg and King, 1978) and body weights from Nelson and Martin (1953).
8 Cited in Palmer (1976).
9 Cited in Johnson et al. (1987).

References (including Appendix)

Allen, A. W. (1987) Habitat suitability index models: mallard (winter habitat, lower Mississippi Valley). U.S. Fish Wildl. Serv. Biol. Rep. No. 82(10.132).

Bellrose, F. C. (1976) Ducks, geese, and swans of North America. Harrisburg, PA: The Stackpole Co.; pp. 229-243.

Bellrose, F. C.; Hawkins, A. S. (1947) (cited in Palmer, 1976). Auk 64: 422-430.

Bent, A. C. (1923) Life histories of North American wild fowl. Washington, DC: U.S. Government Printing Office; Smithsonian Inst. U.S. Nat. Mus., Bull. 126.

Brownie, C.; Anderson, D. R.; Burnham, K. P.; et al. (1978) Statistical inference from band recovery data--a handbook. U.S. Fish Wildl. Serv. Resour. Publ. 131.

Brownie, C.; Anderson, D. R.; Burnham, K. P.; et al. (1985) Statistical inference from band recovery data--a handbook. U.S. Fish Wildl. Serv. Resour. Publ. 156.

Calder, W. A.; Braun, E. J. (1983) Scaling of osmotic regulation in mammals and birds. Am. J. Physiol. 244: R601-R606.

Chu, D. S.; Hestbeck, J. B. (1989) Temporal and geographic estimates of survival and recovery rates for the mallard, 1950 through 1985. Washington, DC: U.S. Fish Wildl. Serv. Tech. Rep. No. 20.

Chura, N. J. (1961) Food availability and preference of juvenile mallards. Trans. N. Am. Wildl. Nat. Resour. Conf. 26: 121-134.

Coulter, M. W.; Miller, W. R. (1968) Nesting biology of black ducks and mallards in northern New England. Vermont Fish and Game Dept. Bull. 68-2.

Cowardin, L. M.; Johnson, D. H. (1979) Mathematics and mallard management. J. Wildl. Manage. 43: 18-35.

Delnicki, D.; Reinecke, K. J. (1986) Mid-winter food use and body weights of mallards and wood ducks in Mississippi. J. Wildl. Manage. 50: 43-51.

Dillon, O. W. (1959) Food habits of wild mallard ducks in three Louisiana parishes. Trans. North Am. Wildl. Nat. Resour. Conf. 24: 374-382.

Doty, H. A. (1975) Renesting and second broods of wild mallards. Wilson Bull. 87: 115.

Duebbert, H. F.; Kantrud, H. A. (1974) Upland duck nesting related to land use and predator reduction. J. Wildl. Manage. 38: 257-265.

Duebbert, H. F.; Lokemoen, J. T. (1976) Duck nesting in fields of undisturbed grass-legume cover. J. Wildl. Manage. 40: 39-49.

Dwyer, T. J.; Krapu, G. L.; Janke, D. M. (1979) Use of prairie pothole habitat by breeding mallards. J. Wildl. Manage. 43: 526-531.

Dzubin, A. (1955) Some evidences of home range in waterfowl. Trans. North Am. Wildl. Nat. Resour. Conf. 20: 278-298.

Eldridge, J. L.; Krapu, G. L. (1988) The influence of diet quality on clutch size and laying pattern in mallards. Auk 105: 102-110.

Fredrickson, L. H.; Heitmeyer, M. E. (1988) Waterfowl use of forested wetlands of the southern United States: an overview. In: Weller, M. W., ed. Waterfowl in winter. Minneapolis, MN: University of Minnesota Press; pp. 307-323.

Fuller, R. W. (1953) Studies in the life history and ecology of the American pintail, *Anas acuta tzitzihoa* (Vieillot), in Utah [master's thesis]. Logan, UT: Utah State Agricultural College.

Gilmer, D. S.; Ball, I. J.; Cowardin, L. M.; et al. (1975) Habitat use and home range of mallards breeding in Minnesota. J. Wildl. Manage. 39: 781-789.

Girard, G. L. (1941) The mallard: its management in western Montana. J. Wildl. Manage. 5: 233-259.

Gollop, J. B.; Marshall, W. H. (1954) A guide to aging duck broods in the field (mimeo). MS: Mississippi Flyway Council Tech. Sect.

Goodman, D. C.; Fisher, H. I. (1962) Functional anatomy of the feeding apparatus in waterfowl *Aves: Anatidae.* Carbondale, IL: Southern Illinois University Press.

Heitmeyer, M. E. (1985) Wintering strategies of female mallards related to dynamics of lowland hardwood wetlands in the upper Mississippi Delta [Ph.D. dissertation]. Columbia, MO: University of Missouri.

Heitmeyer, M. E. (1988a) Body composition of female mallards in winter in relation to annual cycle events. Condor 90: 669-680.

Heitmeyer, M. E. (1988b) Protein costs of the prebasic molt of female mallards. Condor 90: 263-266.

Heitmeyer, M. E.; Vohs, P. A. (1984) Distribution and habitat use of waterfowl wintering in Oklahoma. J. Wildl. Manage. 48: 51-62.

Johnson, D. H.; Grier, J. W. (1988) Determinants of breeding distributions of ducks. Wildl. Monogr. 100: 1-37.

Johnson, D. H.; Sparling, D. W.; Cowardin, L. M. (1987) A model of the productivity of the mallard duck. Ecol. Model. 38: 257-275.

Johnson, M. A.; Hinz, T. C.; Kuck, T. L. (1988) Duck nest success and predators in North Dakota, South Dakota, and Montana: The Central Flyway Study. In: Uresk, D. W.; Schenbeck, G. L.; Cefkin, R., tech. coords. Eighth Great Plains wildlife damage control workshop proceedings; April 28-30, 1987; Rapid City, South Dakota. Fort Collins, CO: U.S. Department of Agriculture, Forest Service, Rocky Mountain Forest and Range Experiment Station; pp. 125-133.

Jorde, D. G.; Krapu, G. L.; Crawford, R. D. (1983) Feeding ecology of mallards wintering in Nebraska. J. Wildl. Manage. 47: 1044-1053.

Kantrud, H. A.; Stewart, R. E. (1977) Use of natural basin wetlands by breeding waterfowl in North Dakota. J. Wildl. Manage. 41: 243-253.

Kirby, R. E.; Cowardin, L. M. (1986) Spring and summer survival of female mallards from northcentral Minnesota. J. Wildl. Manage. 50: 38-43.

Kirby, R. E.; Riechmann, J. H.; Cowardin, L. M. (1985) Home range and habitat use of forest-dwelling mallards in Minnesota. Wilson Bull. 97: 215-219.

Klett, A. T.; Johnson, D. H. (1982) Variability in nest survival rates and implications to nesting studies. Auk 99: 77-81.

Klett, A. T.; Shaffer, T. L.; Johnson, D. H. (1988) Duck nest success in the prairie pothole region. J. Wildl. Manage. 52: 431-440.

Krapu, G. L. (1981) The role of nutrient reserves in mallard reproduction. Auk 98: 29-38.

Krapu, G. L.; Doty, H. A. (1979) Age-related aspects of mallard reproduction. Wildfowl 30: 35-39.

Lasiewski, R. C.; Calder, W. A. (1971) A preliminary allometric analysis of respiratory variables in resting birds. Resp. Phys. 11: 152-166.

Lasiewski, R. C.; Dawson, W. R. (1967). A reexamination of the relation between standard metabolic rate and body weight in birds. Condor 69: 12-23.

Lee, F. B.; Jessen, R. L.; Ordal, N. J.; et al. (1964) In: Moyle, J. B., ed. Ducks and land use in Minnesota. Minn. Dept. Conserv. Tech. Bull. 8.

Lokemoen, J. T.; Schnaderbeck, R. W.; Woodward, R. O. (1988) Increasing waterfowl production on points and islands by reducing mammalian predation. In: Uresk, D. W.; Schenbeck, G. L.; Cefkin, R., tech. coord. Eighth Great Plains wildlife damage control workshop proceedings; April 28-30, 1987; Rapid City, South Dakota. Fort Collins, CO: U.S. Department of Agriculture, Forest Service, Rocky Mountain Forest and Range Experiment Station; pp. 146-148.

Lokemoen, J. T.; Duebbert, H. F.; Sharp, D. E. (1990a) Homing and reproductive habits of mallards, gadwalls, and blue-winged teal. Wildl. Monogr. 106: 1-28.

Lokemoen, J. T.; Johnson, D. H.; Sharp, D. E. (1990b) Weights of wild mallard *Anas platyrhynchos*, gadwall *A. strepera*, and blue-winged teal *A. discors* during the breeding season. Wildfowl 41: 122-130.

Martin, A. C.; Zim, H. S.; Nelson, A. L. (1951) American wildlife and plants. New York, NY: McGraw-Hill Book Company, Inc.

McAtee, W. L. (1918) Food habits of the mallard ducks of the United States. U.S. Dept. Agric. Bull. 720.

McEwan, E. H.; Koelink, A. F. (1973) The heat production of oiled mallards and scaup. Can. J. Zool. 51: 27-31.

Meeh, K. (1879) Oberflachenmessungen des mensclichen Korpers. Z. Biol. 15: 426-458.

Nagy, K. A. (1987) Field metabolic rate and food requirement scaling in mammals and birds. Ecol. Monogr. 57: 111-128.

National Geographic Society. (1987) Field guide to the birds of North America. Washington, DC: National Geographic Society.

Nelson, A. L.; Martin, A. C. (1953) Gamebird weights. J. Wildl. Manage. 17: 36-42.

Palmer, R. S. (1976) Handbook of North American birds: v. 1. New Haven, CT: Yale University Press.

Perret, N. G. (1962) The spring and summer foods of the common mallard (*Anas platyrhynchos platyrhynchos* L.) in south central Manitoba [master's thesis]. Vancouver, BC: University of British Columbia.

Poole, E. L. (1938) Weights and wing areas in North American birds. Auk 55: 511-517.

Pospahala, R. S.; Anderson, D. R.; Henny, C. J. (1974) Breeding habitat conditions, size of the breeding populations, and production indices in population ecology of the mallard. Bureau of Sport Fish. and Wildl., Res. Publ. 115, U.S. GPO Stock No. 2410-00387.

Ringelman, J. K.; Eddleman, W. R.; Miller, H. W. (1989) High plains reservoirs and sloughs. In: Smith, L. M.; Pederson, R. L.; Kaminski, R. M., eds. Habitat management for wintering waterfowl in North America. Lubbock, TX: Texas Tech University Press; pp. 311-340.

Rubner, M. (1883) Uber den Einfluss der Korpergrosse auf Stoff- und Kraftweschsel. Z. Biol. 19: 535-562.

Rutherford, W. H. (1966) Chronology of waterfowl migration in Colorado. Colo. Div. Wildl.; Game Inf. Leafl. No. 42.

Simpson, S. G. (1988) Duck nest success on South Dakota game production areas. In: Uresk, D. W.; Schenbeck, G. L.; Cefkin, R., tech. coords. Eighth Great Plains wildlife damage control workshop proceedings; April 28-30, 1987; Rapid City, South Dakota. Fort Collins, CO: U.S. Department of Agriculture, Forest Service, Rocky Mountain Forest and Range Experiment Station; pp. 140-145.

Stoudt, J. H. (1944) Food preferences of mallards on the Chippewa National Forest, Minnesota. J. Wildl. Manage 8: 100-112.

Swanson, G. A.; Meyer, M. I. (1973) The role of invertebrates in the feeding ecology of Anatinae during the breeding season. In: The Waterfowl Habitat Management Symposium at Moncton, New Brunswick, Canada; July 30 - August 1, 1973; The Atlantic Waterfowl Council; pp. 143-180.

Swanson, G. A.; Krapu, G. L.; Serie, J. R. (1979) Foods of laying female dabbling ducks on the breeding grounds. In: Bookhout, T. A., ed. Waterfowl and wetlands--an integrated review: proceedings of 1977 symposium. Madison, WI: The Wildlife Society, NC Sect.; pp. 47-57.

Swanson, G. A.; Meyer, M. I.; Adomaitis, V.A. (1985) Foods consumed by breeding mallards on wetlands of south-central North Dakota. J. Wildl. Manage. 49: 197-203.

Toft, C. A.; Trauger, D. L.; Murdy, H. W. (1984) Seasonal decline in brood sizes of sympatric waterfowl (*Anas* and *Athya*, Anatidae) and a proposed evolutionary explanation. J. Anim. Ecol. 53: 75-92.

USFWS. (1991) 1991 Status of waterfowl & fall flight forecast. Laurel, MD: U.S. Fish Wildl. Serv., Office of Migratory Bird Management.

Walsberg, G. E.; King, J. R. (1978) The relationship of the external surface area of birds to skin surface area and body mass. J. Exp. Biol. 76: 185-189.

Whyte, R. J.; Bolen, E. G. (1984) Impact of winter stress on mallard body composition. Condor 86: 477-482.

2.1.4. Lesser Scaup (bay ducks)

Order *Anseriformes*, Family *Anatidae*. Bay ducks are adapted for diving and characteristically need a running start to become airborne because their legs are located further back on their body than on other ducks. They breed at mid to high latitudes and winter in flocks on large water bodies and in protected coastal bays and river mouths. Bay ducks dive for their food, and their diet is omnivorous (i.e., both plant and animal matter) and depends on the seasonal and regional abundance of food resources. Because of their food habits, bay ducks prefer deeper, more permanent ponds than dabbling ducks (Bellrose, 1976). The sexes vary in coloration, and different bay duck species range in length from 42 to 53 cm (bill tip to tail tip).

Selected species

The lesser scaup (*Aythya affinis*) is one of the most abundant North American ducks (Allen, 1986). They breed principally throughout western Canada and Alaska, although their breeding range extends into the western United States as far south as Colorado and Ohio. Lesser scaup winter in the United States in the Mississippi flyway and the Atlantic flyway (Bellrose, 1976). They also winter along all coastal areas in the southern states and into Mexico (National Geographic Society, 1987).

Body size. The lesser scaup averages 42 cm from bill tip to tail tip. Males are larger and more colorful than the brown females (Bellrose, 1976; see table). Following their postbreeding molt, scaups increase their fat reserves in preparation for migration (Austin and Fredrickson, 1987; see table).

Habitat. Lesser scaup are found on large lakes and bays during the fall and winter and are common on smaller bodies of water (e.g., ponds) during the spring. They breed in the prairie potholes region, most often on permanent or semipermanent wetlands of 0.85 to 2.0 ha with trees and shrubs bordering at least half of the shorelines (Bellrose, 1976; Smith, 1971, cited in Allen, 1986). Primary brood habitat is characterized by permanent wetlands dominated by emergent vegetation (Smith, 1971, cited in Allen, 1986). In a study of ducks wintering in South Carolina, Bergan and Smith (1989) found lesser scaup would forage primarily in areas with submergent vegetation but also in areas of emergent vegetation, shallow open water, and floating-leaved vegetation. They found some differences in foraging habitat use by season and between males and females. In particular, females tended to use more shallow habitats than males, and males preferred open water in late fall (Bergan and Smith, 1989).

Food habits. Most populations of lesser scaup consume primarily aquatic invertebrates, both from the water column and from the surfaces of aquatic vegetation and other substrates (Tome and Wrubleski, 1988; Bartonek and Hickey, 1969). Common prey include snails, clams, scuds (amphipods), midges, chironomids, and leeches (see table). Scaup are omnivorous, however, and the percentage of plant materials (almost exclusively seeds) in the diet varies seasonally as the availability of different foods changes (Afton et al., 1991; Dirschl, 1969; Rogers and Korschgen, 1966). When seeds are locally abundant, they may be consumed in large quantities (Dirschl, 1969). Breeding females and ducklings

eat mostly aquatic invertebrates (Sugden, 1973). Young ducklings feed primarily on water-column invertebrates (e.g., phantom midges, clam shrimps, water mites), whereas older ducklings forage mainly on bottom-dwelling invertebrates (e.g., scuds or amphipods, dragonflies, caddisflies) (Bartonek and Murdy, 1970). During the winter, there are no significant differences in diet between juveniles and adults or between males and females (Afton et al., 1991).

Molt. Nonbreeding and postbreeding males and nonbreeding females generally leave the breeding grounds in June to molt on lakes. However, some males complete their molt on the breeding grounds (Trauger, 1971, cited in Bellrose, 1976). Large flocks of molting birds become flightless during the wing molt phase, which begins in July and is usually complete by late August (McKnight and Buss, 1962).

Migration. The axis of the main migration corridor extends from the breeding grounds on the Yukon Flats, Alaska, to wintering areas in Florida (Bellrose, 1976). Most scaup winter in the United States, with the greatest numbers in the Mississippi flyway and the Atlantic flyway. They start to arrive at their wintering areas in mid-October (Bellrose, 1976). The timing of northward migration in the spring varies from February to May (Bellrose, 1976). Before migration, scaup gain weight by increasing their body fat content (Austin and Fredrickson, 1987).

Breeding activities and social organization. Scaup build nests on the ground among tall grasses, shrubs, or forbs where plant heights range from 20 to 60 cm (Hines, 1977). Nests can be located along the edge of shorelines to upland areas (Bellrose, 1976). Courtship and pair bonds start to form on the wintering grounds, and pairs typically remain together for only one season. Males do not remain long after incubation commences (Trauger, 1971, cited in Bellrose, 1976). The female and her brood leave the vicinity of the nest shortly after the ducklings have hatched. Most broods are on their own by 4 to 5 weeks of age (Gehrman, 1951, cited in Bellrose, 1976) and fledge between 7 and 9 weeks of age (Bellrose, 1976; Lightbody and Ankney, 1984). Females of this species often lay eggs in other lesser scaup nests (nest parasitism), which can result in large compound clutches of lesser scaup eggs in a single nest (Hines, 1977). Hines (1977) also found that mixing of broods was common in Saskatchewan; by August, groups of 15 to 40 ducklings led by two to three hens would be common. Female lesser scaup also occasionally lay eggs in the nests of other ducks (e.g., gadwall; Hines, 1977).

Home range and resources. Relatively small nesting territories and large highly overlapping foraging ranges are characteristic of lesser scaup (Hammel, 1973, cited in Allen, 1986). Several pairs can nest in close proximity without aggression, each defending only a small area immediately surrounding the nest (Bellrose, 1976; Vermeer, 1970). In Manitoba, Hammel (1973) estimated the mean minimum foraging home range to be 89 ± 6.5 ha. Initial areas occupied by pairs usually contain stumps, logs, boulders, or beaches as loafing sites, but later lesser scaup rely solely on open water (Gehrman, 1951, cited in Bellrose, 1976).

Population density. In winter, local densities of scaup can be very high, as large flocks float on favored feeding areas (Bellrose, 1976). In summer, the density of breeding

pairs increases with the permanence and size of the ponds (Kantrud and Stewart, 1977; see table).

Population dynamics. In some populations, many yearling and some 2-year-olds do not breed; the proportion breeding tends to increase with improving water and habitat conditions (Afton, 1984; McKnight and Buss, 1962). In a 4-year study in Manitoba, Afton (1984) found that, on average, 30 percent of 1-year-olds and 10 percent of 2-year-olds, did not breed. Clutch size and reproductive performance of adult females generally increase with age (Afton, 1984). Most nest failures are due to predation (e.g., by mink, raccoons, red fox), and scaup often attempt to renest if the initial nest fails (Afton, 1984; Bellrose, 1976). Annual mortality for juveniles is higher than that for adults, and adult female mortality exceeds adult male mortality (Smith, 1963; see table).

Similar species (from general references)

- The redhead (*Aythya americana*), a larger bay duck (48 cm), breeds on lakes and ponds in the northwestern United States and in midwestern Canada. They winter in coastal areas and the southern United States and Mexico. In summer, adult female and juvenile redheads consume predominantly animal matter (e.g., caddis flies, midges, water fleas, snails), while males include more plant materials in their diet.

- The canvasback (*Aythya valisineria*) is the largest bay duck (53 cm). They are common on lakes and ponds in the northern United States and southern Canada during the breeding season and along coastal areas of the United States during winter. Studies during the winter in North and South Carolina have found varying diets for canvasbacks, consuming mostly animal matter (e.g., clams); others eat only vegetation. In summer, adult female and juvenile canvasbacks eat predominantly animal material (e.g., caddis flies, snails, mayflies, midges), whereas adult males may eat predominantly vegetable material, particularly tubers of *Potamogeton*.

- The ring-necked duck (*Aythya collaris*) is similar in size (43 cm) to the lesser scaup and prefers freshwater wetlands. They are commonly seen on woodland lakes and ponds, but in winter also use southern coastal marshes. During the winter, ring-necked ducks eat mostly plant materials (81 percent) and a variety of animal matter (19 percent).

- The greater scaup (*Aythya marila*) (46 cm) is common in coastal areas and the Great Lakes during winter. They are omnivorous, eating 50 to 99 percent animal matter and the remainder plant foods during the winter.

General references

Allen (1986); Bartonek and Hickey (1969); Bellrose (1976); National Geographic Society (1987); Perry and Uhler (1982).

Lesser Scaup (*Aythya affinis*)

Factors	Age/Sex/ Cond./Seas.	Mean	Range or (95% CI of mean)	Location or subspecies	Reference	Note No.
Body Weight (g)	F preflightless	688		Manitoba, Canada	Austin & Fredrickson, 1987	1
	F flightless	647				
	F postflightless	693				
	F migratory	842				
	F	770	up to 950	United States	Nelson & Martin, 1953	
	M	860	up to 1,100			
Adult Body Fat (grams lipid: % of total body weight)	F preflightless	50.7 (7.4%)		Manitoba, Canada	Austin & Fredrickson, 1987	1
	F flightless	37.2 (5.7%)				
	F postflightless	46.5 (6.7%)				
	F migratory	188.1 (22.3%)				
Duckling Growth Rate	age in weeks	growth in g/day	(final body weight)	Utah or Canada	Sugden & Harris, 1972	2
	0-3	6.9	(190 g)			
	3-6	14	(485 g)			
	6-9	1.5	(516 g)			
	9-12	1.2	(542 g)			
Metabolic Rate (kcal/kg-day)	A F basal	83			estimated	3
	A M basal	81				
		90				
	A B resting 20 to 30°C			Canada	McEwan & Koelink, 1973	
		216				
	A F free-living	211	(102 - 457)		estimated	4
	A M free-living		(99 - 445)			
Food Ingestion Rate (g/g-day)	juveniles, both sexes:	dry matter intake/ wet body weight		Saskatchewan/captive: reared in large brooder and in outdoor pens	Sugden & Harris, 1972	5
	1 - 5 weeks	0.162				
	6 - 12 weeks	0.077				
Water Ingestion Rate (g/g-day)	A F	0.064			estimated	6
	A M	0.062				
Inhalation Rate (m^3/day)	A F	0.34			estimated	7
	A M	0.36				

Lesser Scaup (*Aythya affinis*)

Factors	Age/Sex/ Cond./Seas.	Mean	Range or (95% CI of mean)	Location or subspecies	Reference	Note No.
Surface Area (cm^2)	A F A M	842 906			estimated	8

Dietary Composition				Winter	Location/Habitat (measure)		Note No.
(animal) midges snails grass shrimp (plant - seeds) bulrush (plant - vegetative) green algae				(60.9) 45.9 7.7 7.3 (36.1) 36.0 (3.0) 2.3	Louisiana/lakes, marshes (% dry weight; esophageal & proventricular contents)	Afton et al., 1991	
juveniles only: (animal) scuds phantom midges clam shrimps dragon/damselflies water bugs water mites caddis flies water beetles mayflies (plants)		(100) 1 ± 1 54 ± 8 30 ± 8 - 4 ± 3 8 ± 3 - 1 ± 1 2 ± 1 (trace)	(100) 57 ± 9 1 ± 1 2 ± 2 17 ± 8 11 ± 7 - 6 ± 5 4 ± 3 - (trace)		Northwest Territories/lake (% wet volume ± SE; esophageal contents)	Bartonek & Murdy, 1970	

Lesser Scaup (*Aythya affinis*)

Dietary Composition	Spring	Summer	Fall	Winter	Location/Habitat (measure)	Reference	Note No.
adults only:					nw Minnesota: spring and fall migrations/lakes, marshes, pools	Afton et al., 1991	
(animal)	(91.8)		(90.5)				
scuds (amphipods)	33.2		54.9				
dragonflies	-		2.4				
caddis flies	8.8		7.6		(% dry weight; esophageal & proventricular contents)		
midges	2.3		-				
other insects	4.9		-				
snails	31.9		10.2				
fingernail clams	6.0		5.1				
brook stickleback	-		4.1				
fathead minnow	-		5.0				
other fish	3.5						
(plants - seeds)	(6.0)		(9.4)				
(plants - vegetative)	(2.2)		(0.1)				
(animal)	(90.9)	(75.1)	(49.6)		Saskatchewan, Canada/shallow lakes	Dirschl, 1969	
scuds	66.0	9.8	42.5				
diptera	-	1.3	0.1				
leeches	12.0	23.7	1.6		(% dry weight; esophagus and proventriculus contents)		
fingernail clams	12.7	25.7	-				
cyprinid fish	-	2.9	-				
caddis flies	0.2	1.6	1.9				
clam shrimps	-	3.1	0.5				
(plant - seeds)	(9.1)	(24.9)	(50.4)				
Nuphar variegatum	-	13.2	42.8				
other seeds	9.1	11.7	7.6				

Population Dynamics	Age/Sex Cond./Seas.	Mean	Range	Location/Habitat		Note No.
Home Range Size (ha)	breeding	89 ± 6.5 SE		Manitoba, Canada	Hammel, 1973	9

Lesser Scaup (*Aythya affinis*)

Population Dynamics	Age/Sex Cond./Seas.	Mean	Range	Location/Habitat	Reference	Note No.
Population Density (pairs/ha)	A B seasonal wetland	0.029		North Dakota/ prairie potholes	Kantrud & Stewart, 1977	
	A B permanent wetland	0.061				
	A B island in lake	28.9	13.1 - 58.5	Alberta, Canada/islands in lakes of parklands and boreal forest	Vermeer, 1970	10
Clutch Size		9.47 ± 0.18 SE	7 - 12	Saskatchewan/marsh island	Hines, 1977	
	2nd yr female	10.0 ± 0.2 SE	8 - 12	Manitoba/lake	Afton, 1984	
	4th yr female	12.1 ± 0.2 SE	11 - 14			
Clutches /Year		1, but often renest if lost		NS/NS	Afton, 1984	
Days Incubation		24.8	21 - 27	NS/NS	Vermeer, 1968	10
Age at Fledging (days)	B	65 ± 0.91 SE		Manitoba/captive	Lightbody & Ankney, 1984	
Percent Nests Hatching	1st yr female	26.3		Manitoba/lake	Afton, 1984	
	2nd yr female	22.2				
	3rd yr female	45.5				
		76		Saskatchewan/marsh islands	Hines, 1977	
Percent Broods Surviving	up to 20 days of age	67.5 ± 4.9 SE		Manitoba/lake	Afton, 1984	
Age at First Breeding	M	most in 2nd yr		NS/NS	Palmer, 1976	
	F	1 - 2 years		Manitoba/lake	Palmer, 1976; Afton, 1984	
Annual Mortality Rates (percent)	juveniles	68 - 71		NS/NS	Smith, 1963	
	A males	38 - 52				
	A females	49 - 60				

Lesser Scaup (*Aythya affinis*)

Seasonal Activity	Begin	Peak	End	Location	Reference	Note No.
Mating/Laying	early June early May	 early June	 early July	Manitoba, Canada Montana	Afton, 1984 Ellig, 1955	 10
	early July	mid-July	early August	NW Territory and Saskatchewan, Canada	Toft et al., 1984; Hines, 1977	
	July		September	Manitoba, Canada	Austin & Fredrickson, 1987	
	early February mid-April September mid-October	March - April mid-November	May mid-November December	departing United States arriving Manitoba, Canada Pacific flyway (s OR, n CA) arriving United States	Bellrose, 1976 Afton, 1984 Gammonley & Heitmeyer, 1990 Bellrose, 1976	

1 Four stages of feather molt evaluated.
2 Ducklings stopped growing at rate typical of wild birds around 6 weeks of age. By 12 weeks, they weighed approximately 200 g less than typical of wild scaup.
3 Estimated using equation 3-28 (Lasiewski and Dawson, 1967) and body weights from Nelson and Martin (1953).
4 Estimated using equation 3-37 (Nagy, 1987) and body weights from Nelson and Martin (1953).
5 Young ducklings maintained in 18 to 27°C brooder, then in outdoor pens with same temperature range. Metabolizable energy of amphipods (estimated to be 3.11 kcal/g dry wt), a typical scaup food, is similar to the commercial diet used in the experiment (3.09 kcal/g dry wt). Ducklings stopped growing as rapidly as would wild ducklings at about 6 weeks of age. For methods of estimating food ingestion rates for adult scaup, see Chapters 3 and 4.
6 Estimated using equation 3-15 (Calder and Braun, 1983) and body weights from Nelson and Martin (1953).
7 Estimated using equation 3-19 (Lasiewski and Calder, 1971) and body weights from Nelson and Martin (1953).
8 Estimated using equation 3-21 (Meeh, 1879 and Rubner, 1883, cited in Walsberg and King, 1978) and body weights from Nelson and Martin (1953).
9 Relatively small, highly overlapping, home ranges. Cited in Allen (1986).
10 Cited in Bellrose (1976).

References (including Appendix)

Afton, A. D. (1984) Influence of age and time on reproductive performance of female lesser scaup. Auk 101: 255-265.

Afton, A. D.; Hier, R. H.; Paulus, S. L. (1991) Lesser scaup diets during migration and winter in the Mississippi flyway. Can. J. Zool. 69: 328-333.

Allen, A. W. (1986) Habitat suitability index models: lesser scaup. U.S. Fish Wildl. Serv. Biol. Rep. 82(10.117).

Austin, J. E.; Fredrickson, L. H. (1987) Body and organ mass and body composition of postbreeding female lesser scaup. Auk 104: 694-699.

Bartonek, J. C.; Hickey, J. J. (1969) Food habits of canvasbacks, redheads, and lesser scaup in Manitoba. Condor 71: 280-290.

Bartonek, J. C.; Murdy, H. W. (1970) Summer foods of lesser scaup in subarctic taiga. Arctic 23: 35-44.

Bellrose, F. C. (1976) Ducks, geese, and swans of North America. Harrisburg, PA: The Stackpole Co.

Bergan, J. F.; Smith, L. M. (1989) Differential habitat use by diving ducks wintering in South Carolina. J. Wildl. Manage. 53: 1117-1126.

Calder, W. A.; Braun, E. J. (1983) Scaling of osmotic regulation in mammals and birds. Am. J. Physiol. 244: R601-R606.

Chabreck, R. H.; Takagi, T. (1985) Foods of lesser scaup in crayfish impoundments in Louisiana. Proc. Annu. Conf. Southeast. Assoc. Fish Wildl. Agencies 39: 465-470.

Chappel, W. A.; Titman, R. D. (1983) Estimating reserve lipids in greater scaup (*Aythya marila*) and lesser scaup (*A. affinis*). Can. J. Zool. 61: 35-38.

Dirschl, H. J. (1969) Foods of lesser scaup and blue-winged teal in the Saskatchewan River Delta. J. Wildl. Manage. 33: 77-87.

Dunning, J. B., Jr. (1984) Body weights of 686 species of North American birds. Western Bird Banding Association, Monograph No. 1. Cave Creek, AZ: Eldon Publishing.

Ellig, L. J. (1955) Waterfowl relationships to Greenfields Lake, Teton County, Montana. Mont. Fish. and Game Comm. Tech. Bull. 1.

Gammonley, J. H.; Heitmeyer, M. E. (1990) Behavior, body condition, and foods of buffleheads and lesser scaups during spring migration through the Klamath Basin, California. Wilson Bull. 102: 672-683.

Gehrman, K. H. (1951) An ecological study of the lesser scaup duck (*Athaya affinis Eyton*) at West Medical Lake, Spokane County, Washington [master's thesis]. Pullman, WA: Washington State College.

Gollop, J. B.; Marshall, W. H. (1954) A guide for aging duck broods in the field (mimeo). MS: Mississippi Flyway Council Tech. Sect.

Hammel, G. S. (1973) The ecology of the lesser scaup (*Athaya affinis* Eyton) in southwestern Manitoba [master's thesis]. Guelph, Ontario: University of Guelph.

Hines, J. E. (1977) Nesting and brood ecology of lesser scaup at Waterhen Marsh, Saskatchewan. Can. Field-Nat. 91: 248-255.

Hoppe, R. T.; Smith, L. M.; Wester, D. B. (1986) Foods of wintering diving ducks in South Carolina. J. Field Ornithol. 57: 126-134.

Hunt, E. G.; Anderson, W. (1966) Renesting of ducks at Mountain Meadows, Lassen County, California. Calif. Fish and Game 52: 17-27.

Kantrud, H. A.; Stewart, R. E. (1977) Use of natural basin wetlands by breeding waterfowl in North Dakota. J. Wildl. Manage. 41: 243-253.

Lasiewski, R. C.; Calder, W. A. (1971) A preliminary allometric analysis of respiratory variables in resting birds. Resp. Phys. 11: 152-166.

Lasiewski, R. C.; Dawson, W. R. (1967). A reexamination of the relation between standard metabolic rate and body weight in birds. Condor 69: 12-23.

Lightbody, J. P.; Ankney, C. D. (1984) Seasonal influence on the strategies of growth and development of canvasback and lesser scaup ducklings. Auk 101: 121-133.

McEwan, E. H.; Koelink, A. F. (1973) The heat production of oiled mallards and scaup. Can. J. Zool. 51: 27-31.

McKnight, D. E.; Buss, I. O. (1962) Evidence of breeding in yearling female lesser scaup. J. Wildl. Manage. 26: 328-329.

Meeh, K. (1879) Oberflachenmessungen des mensclichen Korpers. Z. Biol. 15: 426-458.

Nagy, K. A. (1987) Field metabolic rate and food requirement scaling in mammals and birds. Ecol. Monogr. 57: 111-128.

Nasser, J. R. (1982) Management of impoundments for crayfish and waterfowl [master's thesis]. Baton Rouge, LA: Louisiana State University.

National Geographic Society. (1987) Field guide to the birds of North America. Washington, DC: National Geographic Society.

Nelson, A. L.; Martin, A. C. (1953) Gamebird weights. J. Wildl. Manage. 17: 36-42.

Palmer, R. S. (1976) Handbook of North American birds: v. 2, 3. New Haven, CT: Yale University Press.

Perry, M. C.; Uhler, F. M. (1982) Food habits of diving ducks in the Carolinas. Proc. Annu. Conf. Southeast. Assoc. Fish Wildl. Agencies 36: 492-504.

Poole, E. L. (1938) Weights and wing areas in North American birds. Auk 55: 511-517.

Rienecker, W. C.; Anderson, W. (1960) A waterfowl nesting study on Tule Lake and Lower Klamath National Wildlife Refuges, 1957. Calif. Fish and Game 46: 481-506.

Ringelman, J. K.; Eddleman, W. R.; Miller, H. W. (1989) High plains reservoirs and sloughs. In: Smith, L. M.; Pederson, R. L.; Kaminski, R. M., eds. Habitat management for wintering waterfowl in North America. Lubbock, TX: Texas Tech University Press; pp. 311-340.

Rogers, J. P. (1962) The ecological effects of drought on reproduction of the lesser scaup, *Aythya affinis* (Eyton) [Ph.D. dissertation]. Columbia, MO: University of Missouri.

Rogers, J. P.; Korschgen, L. J. (1966) Foods of lesser scaups on breeding, migration, and wintering areas. J. Wildl. Manage. 30: 258-264.

Rowinski, L. J. (1958) A review of waterfowl investigations and a comparison of aerial and ground censusing of waterfowl at Minto Flats, Alaska. Mimeogr. Rep.

Rubner, M. (1883) Uber den Einfluss der Korpergrosse auf Stoff- und Kraftweschsel. Z. Biol. 19: 535-562.

Rutherford, W. H. (1966) Chronology of waterfowl migration in Colorado. Colo. Div. Wildl.; Game Inf. Leafl. No. 42.

Siegfried, W. R. (1974) Time budget of behavior among lesser scaups on Delta Marsh. J. Wildl. Manage. 38: 708-713.

Smith, A. G. (1971) Ecological factors affecting waterfowl production in Alberta parklands. U.S. Fish Wildl. Serv. Resour. Publ. 92.

Smith, R. I. (1963) Lesser scaup and ring-necked duck shooting pressure and mortality rates. Bur. Sport Fish & Wildl. Adm. Rep. 20.

Sugden, L. G. (1973) Feeding ecology of pintail, gadwall, American widgeon and lesser scaup ducklings in Southern Alberta. Can. Wildl. Serv. Rep. Ser. No. 24.

Sugden, L. G.; Harris, L. E. (1972) Energy requirements and growth of captive lesser scaup. Poultry Sci. 51: 625-633.

Swanson, G. A.; Krapu, G. L.; Bartonek, J. C.; et al. (1974) Advantages in mathematically weighting waterfowl food habits data. J. Wildl. Manage. 38: 302-307.

Toft, C. A.; Trauger, D. L.; Murdy, H. W. (1984) Seasonal decline in brood sizes of sympatric waterfowl (*Anas* and *Athya*, Anatidae) and a proposed evolutionary explanation. J. Anim. Ecol. 53: 75-92.

Tome, M. W.; Wrubleski, D. A. (1988) Underwater foraging behavior of canvasbacks, lesser scaups, and ruddy ducks. Condor 90: 168-172.

Townsend, G. H. (1966) A study of waterfowl nesting on the Saskatchewan River delta. Can. Field. Nat. 80: 74-88.

Trauger, D. L. (1971) Population ecology of lesser scaup (*Athaya affinis*) in subarctic taiga [Ph.D. dissertation]. Ames, IA: Iowa State University.

Vermeer, K. (1968) Ecological aspects of ducks nesting in high densities among larids. Wilson Bull. 80: 78-83.

Vermeer, K. (1970) Some aspects of the nesting of ducks on islands in Lake Newell, Alberta. J. Wildl. Manage. 34: 126-129.

Walsberg, G. E.; King, J. R. (1978) The relationship of the external surface area of birds to skin surface area and body mass. J. Exp. Biol. 76: 185-189.

2.1.5. Osprey (*Pandion haliaetus*)

Order *Falconiformes*, Family *Accipitridae*. The only North American member of the subfamily Pandioninae, these large birds of prey have long narrow wings, a sharp hooked bill, and powerful talons. Osprey are found near freshwater or saltwater, and their diet is almost completely restricted to fish. They are adapted for hovering over the water and dive feet-first, seizing fish with their talons (Robbins et al., 1983). Once very rare owing to DDT accumulation in their food (1950's to early 1970's), osprey now are increasing in numbers. In the United States, there are five regional populations of osprey (in order of abundance): Atlantic coast, Florida and gulf coast, Pacific Northwest, western interior, and Great Lakes (Henny, 1983). In North America, osprey breed primarily in a wide band from coast to coast across Canada and the southern half of Alaska, where they are not restricted to coastal and Great Lake areas as they are in the United States. However, osprey are reported from all States during the fall and spring migrations (Henny, 1986).

Body size. The various subspecies of osprey around the world differ in size, and in general females are heavier than males (Poole, 1989a; see table). Osprey found in the United States are considered to be of the subspecies *carolinenesis* and average 56 cm from bill tip to tail tip (Robbins et al., 1983) and weigh between 1.2 and 1.9 kg (see table).

Habitat. In the United States, the majority of osprey populations are associated with marine environments, but large inland rivers, lakes, and reservoirs also may support osprey (Henny, 1986, 1988b). Good nesting sites in proximity to open, shallow water and a plentiful supply of fish are the primary resources required for osprey success (Poole, 1989a). The tops of isolated and often dead trees and man-made structures are preferred nesting sites. Osprey often nest in colonies (Poole, 1989a).

Food habits. Osprey are almost completely piscivorous, although they have been observed on occasion taking other prey including birds, frogs, and crustaceans (Brown and Amadon, 1968). Their prey preferences change seasonally with the abundance of the local fish (Edwards, 1988; Greene et al., 1983). Osprey occasionally will pick up dead fish but only if fresh (Bent, 1937). Osprey are most successful catching species of slow-moving fish that eat benthic organisms in shallow waters and fish that remain near the water's surface (Poole, 1989a). Osprey consume all parts of a fish except the larger bones; later, bones and other undigestible parts are ejected in fecal pellets (Bent, 1937).

Molt. Juvenile plumage is fully developed by fledging at about 60 days of age (Henny, 1988b). Juveniles undergo a gradual molt to adult plumage at approximately 18 months of age (Brown and Amadon, 1968). For adults, the basic molt takes place in two phases; the first phase occurs primarily on the wintering grounds prior to spring migration. Completion of the molt occurs in the summer range prior to fall migration (Henny, 1988b).

Migration. Osprey are year-round residents in the most southern parts of their range (e.g., south Florida, Mexico) but are migratory over the rest of their range in the United States and Canada (Poole, 1989a). Studies of banded osprey have shown that the fall migration begins in late August in the north temperate zone, with adults and juveniles

from the eastern and central United States comprising a broad front flying south and then directly across open ocean to their wintering grounds in Central and South America (Poole, 1989a). Spring migration appears to follow the same routes with birds reaching, for example, the Chesapeake Bay area in mid-March (Reese, 1977) and Minnesota by the first half of April (Dunstan, 1973; Henny and Van Velzen, 1972). The majority of migrating osprey appear to follow the coastline, perhaps because they come from coastal colonies or because the coast offers abundant food (Poole, 1989a). After their first migration south, juveniles remain in their wintering grounds for about a year and a half, returning north to the breeding grounds as 2-year-olds (Henny and Van Velzen, 1972).

Breeding activities and social organization. Nonmigratory (i.e., year-round resident) populations breed during the winter; whereas migratory populations breed during the summer (Poole, 1989a). Monogamy is the general rule for osprey; breeding pairs remain together and return to the same nest site year after year (Fernandez and Fernandez, 1977; Henny, 1988b). Colonies of osprey occur in areas such as islands, reservoirs, or lakes that offer secure nesting sites and abundant food (Henny, 1986), but most osprey are solitary nesters, often separated from other nests by tens to hundreds of kilometers (Poole, 1989a). The female performs most of the incubation and relies completely on the male for food from just after mating until the young have fledged (Poole, 1989a). Van Daele and Van Daele (1982) found that ospreys at successful nests incubated 99.5 to 100 percent of the daylight hours; disturbance of the nest during this time can kill the eggs if the adults are kept from returning to the nest for some time. After hatching, the female is in constant attendance at the nest for the first 35 days but may perch nearby at intervals after that (Henny, 1988b). The female distributes the food delivered by the male by biting off pieces to feed to the young (Poole, 1989a). By 30 days, the nestlings have reached 70 to 80 percent of their adult weight and begin to be active in the nest (Poole, 1989a). The young fledge by age 60 to 65 days in nonmigratory populations and by about 50 to 55 days in migratory populations (Henny et al., 1991). After fledging, the young remain dependent on both parents for food usually for an additional 2 to 3 weeks (Poole, 1989a), but dependency can continue up to 6 weeks in the more southern populations (Henny, 1986).

Home range and resources. Osprey build large stick nests in the tops of tall trees or artificial structures such as buoys and radio towers (Poole, 1989a). In the Chesapeake Bay area, less than one third of the 1,450 breeding pairs built their nests in trees, while over half nested on channel markers and duck blinds, and the remainder on miscellaneous man-made structures (Henny et al., 1974). Osprey build their nest at the top of the chosen site, which can make it vulnerable to destruction from high winds (Henny, 1986). If not lost, the same nest often is used year after year, and it can become quite large (e.g., over 2 m tall and 1.5 m across) (Dunstan, 1973; Henny, 1988a). On islands where no predators are present, osprey will nest on the ground (Poole, 1989b). The distance osprey travel from their nests to forage (i.e., foraging radius) depends on the availability of appropriate nest sites near areas with sufficient fish; osprey will travel up to 10 to 15 km to obtain food (Van Daele and Van Daele, 1982).

Population density. Population density depends on the availability and distribution of resources and can be highly variable. Henny (1988a) reported as many as 1.9 nests per hectare in one of the largest osprey colonies in the western United States in 1899, with an

estimated 1.0 to 1.2 nests per hectare occupied that year. Lower densities on the order of 0.005 to 0.1 nests per hectare are more common (see table).

Population dynamics. Breeding data from many locations in the United States and Canada during the years 1950 to 1976 show low productivity (fewer than one chick fledged per active nest on average). Evidence indicates the cause to be egg-shell thinning that resulted from the ospreys' exposure to DDT that had bioaccumulated in fish (Henny and Anthony, 1989; Henny et al., 1977; Poole, 1989a). Thus, data from reproductive studies conducted during this time can only be used with this in mind (Spitzer et al., 1978).[a] Because of their terminal position in the aquatic food chain, osprey can be a sensitive indicator of toxic contaminants that bioaccumulate (Henny et al., 1978; Henny, 1988b).

Osprey are only known to start a second clutch if the first one is destroyed (Poole, 1989a). Juveniles do not return to their place of birth until 2 years of age, and they do not breed until their third season (Henny and Van Velzen, 1972). Often, breeding is delayed until 4 to 7 years of age in areas such as the Chesapeake Bay, where good nesting sites are scarce (Poole, 1989b).

General references

Poole (1989a); Brown and Amadon (1968); Henny (1986); Henny (1988b).

---

[a]In the table beginning on the next page, data on the number fledged per active nest and the number fledged per successful nest are provided only for studies of populations that appeared to be unaffected by DDT.

Osprey (*Pandion haliaetus*)

Factors	Age/Sex/ Cond./Seas.	Mean	Range or (95% CI of mean)	Location (subspecies)	Reference	Note No.
Body Weight (g)	A F	1,568	1,250 - 1,900	NS	Brown & Amadon, 1968	
	A M	1,403	1,220 - 1,600			
	A F courtship	1,880 ± 20 SE		se Massachusetts	Poole, 1984	1
	A F incubation	1,925 ± 25 SE				
	A F late nestl.	1,725 ± 25 SE				
	A M courtship	1,480 ± 15 SE				
	A M late nestl.	1,420 ± 15 SE				
	F at fledging	1,510		Maryland, Virginia	McLean, 1986	
	M at fledging	1,210				
Egg Weight (g)		72.2 ± 5.35 SD	66.0 - 81.3	North Carolina *(carolinensis)*	Whittemore, 1984	
Metabolic Rate (kcal/kg-day)	A F basal	69			estimated	2
	A M basal	71				
	A F free-living	181	(85 - 384)		estimated	3
	A M free-living	186	(87 - 395)			
Food Ingestion Rate (g/g-day)	A F courtship period	0.21		se Massachusetts	Poole, 1983	
Water Ingest. Rate (g/g-day)	A F	0.051			estimated	4
	A M	0.053				
Inhalation Rate (m^3/day)	A F	0.578			estimated	5
	A M	0.531				
Surface Area (cm^2)	A F	1,353			estimated	6

Osprey (*Pandion haliaetus*)

Dietary Composition	Spring	Summer	Fall	Winter	Location/Habitat (measure)	Reference	Note No.
alewife smelt pollock winter flounder		32 5 53 10			Nova Scotia, Canada/ harbor, bay (% wet weight; observed captures)	Greene et al., 1983	7
starry flounder cutthroat trout		95 5			se Alaska/NS (% wet weight; observed captures, noting fish length)	Hughes, 1983	7
carp crappie		67 33			w Oregon/NS (% wet weight; observed captures, noting fish length)	Hughes, 1983	7
gizzard shad sunfish largemouth bass golden shiner	63 29 5 3				Florida/lake (% of prey caught; identified at nests)	Collopy, 1984	
brown bullhead salmonids northern squawfish yellow perch largescale sucker	37.7 20.8 19.3 11.6 10.6				Idaho/reservoir (% of fish caught; observed captures)	Van Daele & Van Daele, 1982	
Size of fish caught: < 10 cm 11 - 20 cm 21 - 30 cm 31 - 40 cm 41 + cm		 3.3 42.1 46.7 6.6 1.3			Idaho/reservoir (% of fish in each size class; determined from remains at nest)	Van Daele & Van Daele, 1982	

Osprey (*Pandion haliaetus*)

Population Dynamics	Age/Sex Cond/Seas	Mean	Range	Location/Habitat	Reference	Note No.
Foraging Radius (km)	A M	1.7	0.7 - 2.7	Minnesota/lakes	Dunstan, 1973	
	A B spring	10		Nova Scotia/coastal	Greene et al., 1983	
	A B	3 to 8	> 1	nw California/coastal, bay	Koplin, 1981	
Population Density (nests/ha)	A B summer	1.9		Oregon/lake in 1899 only	Henny, 1988a	
	A B spring	0.028		Florida/wetland	Eichholz, 1980	
	A B spring	0.10		North Carolina/reservoir	Henny & Noltemeier, 1975	
	A B spring	0.005		North Carolina/lake	Henny & Noltemeier, 1975	
Clutch Size		3.23 ± 0.03 SE		Atlantic Seaboard/NS	Judge, 1983	
		2.84 ± 0.07 SE		Georgia, Florida/NS	Judge, 1983	
		2.67 ± 0.07 SE		s California, n Mexico/NS	Judge, 1983	
		3.23 ± 0.09 SE		ne United States/NS	Spitzer, 1980	
		2.82	1 - 4	Idaho/river, lakes	Henny et al., 1991	
Clutches/Year		1		NS/NS	Poole, 1989a	8
Days Incubation		38.1 ± 3.2 SD	32 - 42	Baja California, Mexico/coastal islands	Judge, 1983	
			35 - 43	Massachusetts/NS	Poole, 1989a	
Age at Fledging (days)	non-migr. pop.	62.5 ± 4.9 SD	52 - 76	Baja California, Mexico/coastal islands	Judge, 1983	9
	migratory pop.	54 ± 3.0 SD	48 - 59	Maryland/Cheasapeake Bay	Stotts & Henny, 1975	9
Number Fledge per Active Nest		1.16	0.79 - 1.47 (10 yrs)	N. Carolina/lake	Whittemore, 1984	
		1.34		S. Carolina/lake	Henny & Noltemeier, 1975	
		1.58	1.17 - 1.89 (3 yrs)	Idaho/reservoir	Van Daele & Van Daele, 1982	
		1.92		e United States/coastal	Poole, 1984	

Osprey (*Pandion haliaetus*)

Population Dynamics	Age/Sex Cond/Seas	Mean	Range	Location/Habitat	Reference	Note No.
Number Fledge per Successful Nest		1.7		Baja California, Mexico/coastal islands	Judge, 1983	
		2.14		Idaho/river	Henny et al., 1991	
		1.83		Florida/lake	Collopy, 1984	
		1.79		Delaware/coastal bay	Henny et al., 1977	
		2.05		Montana/lake	Henny et al., 1991	
Age at Sexual Maturity	B		3 - 5 yrs	New York,	Spitzer, 1980	10
	B	3 yrs		Massachusetts/NS	Henny & Wight, 1969	
				North America/NS		
Annual Mortality Rates (percent)	1st year	57.3		New York, New Jersey/NS	Henny & Wight, 1969	
	years 2 - 18	18.5 ± 1.8				
	J B	41		NS/NS	Spitzer, 1980	
	A B	15				
Average Longevity	if reach sex. maturity	4.8		NS/NS	Brown & Amadon, 1968	
Seasonal Activity		**Peak**	**End**		**Reference**	**Note No.**
Mating	late April	May	mid-June	Delaware, New Jersey	Bent, 1937	
		May		Minnesota	Dunstan, 1973	
	early Dec.		late February	Florida (nonmigratory)	Poole, 1989a	
	early January		early March	Baja California, Mexico (nonmigratory)	Judge, 1983	
Hatching	mid-March	early May	late May	Maryland, Virginia	Bent, 1937	
	late April	mid-May	mid-June	New York/New England	Bent, 1937	
	February		late April	Baja California, Mexico (nonmigratory)	Judge, 1983	
Migration fall	late August	September	November	most of United States	Henny, 1986	11
spring	early April			Minnesota	Dunstan, 1973	
	early March			North Carolina	Parnell & Walton, 1977	

Osprey (*Pandion haliaetus*)

1 Late nestl. indicates late nestling stage of the breeding season. Cited in Poole (1989a).
2 Estimated using equation 3-28 (Lasiewski and Dawson, 1967) and body weights from Brown and Amadon (1968).
3 Estimated using equation 3-37 (Nagy, 1987) and body weights from Brown and Amadon (1968).
4 Estimated using equation 3-15 (Calder and Braun, 1983) and body weights from Brown and Amadon (1968).
5 Estimated using equation 3-19 (Lasiewski and Calder, 1971) and body weights from Brown and Amadon (1968).
6 Estimated using equation 3-21 (Meeh, 1879 and Rubner, 1883, cited in Walsberg and King, 1978) and body weights from Brown and Amadon (1968).
7 Percent wet weight of food ingested by free-flying osprey estimated by identifying species of fish captured (using binoculars), estimating the length of each fish captured by comparison with osprey, and using laboratory measures of weights and lengths of samples of these fish species.
8 Second clutch produced only if first is lost.
9 Nestlings in migratory populations fledge at an earlier age than nestlings in nonmigratory populations, such as those in Mexico and south Florida.
10 Cited in Henny (1988b).
11 Cited in Henny (1986).

References (including Appendix)

Bent, A. C. (1937) Life histories of North American birds of prey. Part 1: Order Falconiformes. Washington, DC: U.S. Government Printing Office; Smithsonian Inst. U.S. Nat. Mus., Bull. 167.

Brown, L.; Amadon, D. (1968) Eagles, hawks, and falcons of the world, v. 1. New York, NY: McGraw-Hill.

Calder, W. A.; Braun, E. J. (1983) Scaling of osmotic regulation in mammals and birds. Am. J. Physiol. 244: R601-R606.

Collopy, M. W. (1984) Parental care, productivity, and predator-prey relationships of ospreys in three North Florida Lakes: preliminary report. In: Westall, M. A., ed. Proc. southeastern U.S. and Caribbean osprey symposium; pp. 85-98.

Cramp, S., chief ed. (1980) Handbook of the birds of Europe, the Middle East and North Africa: v. 2. Oxford, UK: Oxford University Press.

Dunstan, T. C. (1968) Breeding success of osprey in Minnesota from 1963-1968. Loon 40: 109-112.

Dunstan, T. C. (1973) The biology of ospreys in Minnesota. Loon 45: 108-113.

Edwards, T. C., Jr. (1988) Temporal variation in prey preference patterns of adult ospreys. Auk 105: 244-251.

Eichholz, N. F. (1980) Osprey nest concentrations in northwest Florida. Fla. Field Nat. 8: 18-19.

Fernandez, G.; Fernandez, J. (1977) Some instant benefits and long range hopes of color banding ospreys. Transactions of the North American osprey research conference. U.S. Natl. Park Serv. Trans. Proc. Ser. 2.

French, J. M. (1972) Distribution, abundance, and breeding status of ospreys in northwestern California [master's thesis]. Arcata, CA: Humboldt State University.

French, J. M.; Koplin, J. R. (1977) Distribution, abundance, and breeding status of ospreys in northwestern California. Transactions of the North American osprey research conference. U.S. Natl. Park Serv. Trans. Proc. Ser. 2: 223-240.

Garber, D. P. (1972) Osprey nesting ecology in Lassen and Plumas Counties, California [master's thesis]. Arcata, CA: Humboldt State University.

Greene, E. P.; Greene, A. E.; Freedman, B. (1983) Foraging behavior and prey selection by ospreys in coastal habitats in Nova Scotia, Canada. In: Bird, D. M.; Seymour, N. R.; Gerrard, J. M., eds. Biology and management of bald eagles and ospreys. St. Anne de Bellvue, Quebec: Harpell Press; pp. 257-267.

Grubb, T. C., Jr. (1977) Weather dependent foraging in ospreys. Auk 94: 146-149.

Hagan, J. M. (1984) North Carolina osprey population: social group or breeding aggregation? In: Westall, M. A., ed. Proc. southeastern U.S. and Caribbean osprey symposium.

Henny, C. J. (1977) Research, management and status of the osprey in North America. In: Chancellor, R. D., ed. Proc. world birds of prey conf. Internat. Council Bird Preserv.; Vienna, Austria; pp. 199-222.

Henny, C. J. (1983) Distribution and abundance of nesting ospreys in the United States. In: Bird, D. M.; Seymour, N. R.; Gerrard, J. M., eds. Biology and management of bald eagles and ospreys. St. Anne de Bellvue, Quebec: Harpell Press; pp. 175-186.

Henny, C. J. (1986) Osprey (*Pandion haliaetus*), Section 4.3.1, US Army Corps of Engineers Wildlife Resources Management Manual. Prepared by U.S. Fish Wildl. Serv., Patuxent Wildl. Res. Center, Corvallis, OR for US Army Engineer Waterways Experiment Station, Vicksburg, MS: Technical Report EL-86-5.

Henny, C. J. (1988a) Large osprey colony discovered in Oregon. Murrelet 69: 33-36.

Henny, C. J. (1988b) Osprey [sections]. In: Palmer, R. S., ed. Handbook of North American birds: v. 4. New Haven, CT: Yale University Press.

Henny, C. J.; Anthony, R. G. (1989) Bald eagle and osprey. Natl. Wildl. Fed. Sci. Tech. Ser. No. 12: 66-82.

Henny, C. J.; Noltemeier, A. P. (1975) Osprey nesting populations in the coastal Carolinas. Amer. Birds 29: 1073-1079.

Henny, C. J.; Van Velzen, W. T. (1972) Migration patterns and wintering localities of American ospreys. J. Wildl. Manage. 36: 1133-1141.

Henny, C. J.; Wight, H. M. (1969) An endangered osprey population: estimates of mortality and production. Auk 86: 288-198.

Henny, C. J.; Smith, M. M.; Stotts, V. D. (1974) The 1973 distribution and abundance of breeding ospreys in the Chesapeake Bay. Chesapeake Sci. 15: 125-133.

Henny, C. J.; Byrd, M. A.; Jacobs, J. A.; et al. (1977) Mid-Atlantic coast osprey population: present numbers, productivity, pollutant contamination, and status. J. Wildl. Manage. 41: 254-265.

Henny, C. J.; Collins, J. A.; Deibert, W. J. (1978) Osprey distribution, abundance, and status in western North America. Murrlet 59: 14-25.

Henny, C. J.; Blus, L. J.; Hoffman, D. J.; et al. (1991) Lead accumulation and osprey production near a mining site on the Coeur d'Alene River, Idaho. Arch. Environ. Contam. Toxicol. 21: 415-424.

Hughes, J. (1983) On osprey habitat and productivity: a tale of two habitats. In: Bird, D. M.; Seymour, N. R.; Gerrard, J. M., eds. Biology and management of bald eagles and ospreys. St. Anne de Bellvue, Quebec: Harpell Press; pp. 269-273.

Judge, D. S. (1983) Productivity of ospreys in the gulf of California. Wilson Bull. 95: 243-255.

Kennedy, R. S. (1973) Notes on the migration of juvenile ospreys from Maryland and Virginia. Bird-Banding 44: 180-186.

Koplin, J. R. (1981) Reproductive performance of ospreys (*Pandion haliaetus*) in northwestern California. Natl. Geogr. Soc. Res. Rep. 13: 337-344.

Lasiewski, R. C.; Calder, W. A. (1971) A preliminary allometric analysis of respiratory variables in resting birds. Resp. Phys. 11: 152-166.

Lasiewski, R. C.; Dawson, W. R. (1967) A re-examination of the relation between standard metabolic rate and body weight in birds. Condor 69: 12-23.

Lind, G. S. (1976) Production, nest site selection, and food habits of ospreys in Deschutes National Forest, Oregon [master's thesis]. Corvallis, OR: Oregon State University.

MacCarter, D. S. (1972) Food habits of osprey at Flathead Lake, Montana [master's thesis]. Arcata, CA: Humboldt State University.

MacNamara, M. (1977) Sexing the American osprey using secondary sexual characteristics. Transactions of the North American osprey research conference. U.S. Natl. Park Serv. Trans. Proc. Ser. 2: 43-45.

McLean, P. K. (1986) The feeding ecology of Chesapeake Bay ospreys and the growth and behavior of their young [master's thesis]. Williamsburg, VA: College of William and Mary.

Meeh, K. (1879) Oberflachenmessungen des mensclichen Korpers. Z. Biol. 15: 426-458.

Melquist, W. E.; Johnson, D. R.; Carrier, W. D. (1978) Migration patterns of northern Idaho and eastern Washington ospreys. Bird-Banding 49: 234-236.

Nagy, K. A. (1987) Field metabolic rate and food requirement scaling in mammals and birds. Ecol. Monogr. 57: 111-128.

Nesbitt, S. (1974) Foods of the osprey at Newnans Lake. Fla. Field Nat. 2: 45.

Ogden, J. C. (1977) Preliminary report on a study of Florida ospreys. In: Ogden, J. C., ed. Transactions of the North American osprey research conference; pp. 143-151.

Parnell, J. F.; Walton, R. (1977) Osprey reproductive success in southeastern North Carolina. Transactions North American osprey research conference. U.S. Natl. Park Serv. Trans. Proc. Ser. 2: 139-142.

Peakall, D. B. (1988) Known effects of pollutants on fish-eating birds in the Great Lakes of North America. In: Toxic contamination in large lakes; v. 1; pp. 39-54.

Poole, A. F. (1982) Brood reduction in temperate and subtropical ospreys. Oecologia (Berl.) 53: 111-119.

Poole, A. F. (1984) Reproductive limitation in coastal ospreys: an ecological and evolutionary perspective [Ph.D. dissertation]. Boston, MA: Boston University.

Poole, A. F. (1983) Courtship feeding, clutch size, and egg size in ospreys: a preliminary report. In: Bird, D. M.; Seymour, N. R.; Gerrard, J. M., eds. Biology and management of bald eagles and ospreys. St. Anne de Bellvue, Quebec: Harpell Press; pp. 243-256.

Poole, A. F. (1989a) Ospreys: a natural and unnatural history. Cambridge, MA: Cambridge University Press.

Poole, A. F. (1989b) Regulation of osprey *Pandion haliaetus* populations: the role of nest side availability. In: Meyburg, B.-U.; Chancellor, R. D., eds. Raptors in the modern world: proceedings of the 3rd world conference on birds of prey and owls; 22-27 March 1987; Eilat, Israel. Berlin, London, Paris: World Working Group on Birds of Prey and Owls; pp. 227-234.

Prevost, Y. A. (1977) Feeding ecology of ospreys in Antigonish County, Nova Scotia [master's thesis]. Montreal, Quebec: MacDonald College of McGill University.

Prevost, Y. A. (1982) The wintering ecology of ospreys in Senegambia [Ph.D. dissertation]. Edinburgh, Scotland: University of Edinburgh.

Prevost, Y. A.; Bancroft, R. P.; Seymour, N. R. (1978) Status of the osprey in Antigonish County, Nova Scotia. Can. Field-Nat. 92: 294-297.

Reese, J. G. (1977) Reproductive success of ospreys in central Chesapeake Bay. Auk 94: 202-221.

Robbins, C. S.; Bruun, B.; Zim, H. S. (1983) A guide to field identification: birds of North America. New York, NY: Golden Press.

Rubner, M. (1883) Uber den Einfluss der Korpergrosse auf Stoff- und Kraftweschsel. Z. Biol. 19: 535-562.

Spitzer, P. (1980) Dynamics of a discrete coastal breeding population of ospreys in the northeastern U.S. during a period of decline and recovery, 1969-1979 [Ph.D. dissertation]. Ithaca, NY: Cornell University.

Spitzer, P. R.; Risebrough, R. W.; Walker, W. I.; et al. (1978) Productivity of ospreys in Connecticut - Long Island increases as DDE residues decline. Science 202: 333-335.

Stinson, C. H. (1977) Familial longevity in ospreys. Bird-Banding 48: 72-73.

Stocek, R. F.; Pearce, P. A. (1983) Distribution and reproductive success of ospreys in New Brunswick, 1974-1980. In: Bird, D. M.; Seymour, N. R.; Gerrard, J. M., eds. Biology and management of bald eagles and ospreys. St. Anne de Bellvue, Quebec: Harpell Press; pp. 215-221.

Stotts, V. D.; Henny, C. J. (1975) The age at first flight for young American ospreys. Wilson Bull. 87: 277-278.

Swenson, J. E. (1978) Prey and foraging behavior of ospreys on Yellowstone Lake, Wyoming. J. Wildl. Manage. 42: 87-90.

Swenson, J. E. (1979) Factors affecting status and reproduction of ospreys in Yellowstone National Park. J. Wildl. Manage. 43: 595-601.

Szaro, R. C. (1978) Reproductive success and foraging behavior of the osprey at Seahorse Key, Florida. Wilson Bull. 90: 112-118.

Ueoka, M. L. (1974) Feeding behavior of ospreys at Humboldt Bay, California [master's thesis]. Arcata, CA: Humboldt State University.

Van Daele, L. J.; Van Daele, H. A. (1982) Factors affecting the productivity of ospreys nesting in west-central Idaho. Condor 84: 292-299.

Walsberg, G. E.; King, J. R. (1978) The relationship of the external surface area of birds to skin surface area and body mass. J. Exp. Biol. 76: 185-189.

Whittemore, R. E. (1984) Historical overview of osprey at the Mattamuskeet National Wildlife Refuge: results from ten years of nest and productivity surveys. In: Westall, M. A., ed. Proceedings of the Southeastern U.S. and Caribbean Osprey Symposium; pp. 17-41.

Wilcox (1944) (cited in Henny, 1988b) Univ. of State of N.Y. Bull. to the Schools 30:262-264.

2.1.6. Red-Tailed Hawk (buteo hawks)

Order *Falconiformes*, Family *Accipitridae*. The family Accipitridae includes most birds of prey except falcons, owls, and American vultures. Buteo hawks are covered in this section.[b] Buteo hawks are moderately large soaring hawks that inhabit open or semi-open areas. They are the most common daytime avian predators on ground-dwelling vertebrates, particularly rodents and other small mammals. They range in size from the broad winged hawk (41 cm bill tip to tail tip) to the ferruginous hawk (58 cm). Hawks egest pellets that contain undigestible parts of their prey, such as hair and feathers, that can be useful in identifying the types of prey eaten (bones usually are digested completely; Duke et al., 1987).

Selected species

The red-tailed hawk (*Buteo jamaicensis)* is the most common *Buteo* species in the United States (National Geographic Society, 1987). Breeding populations are distributed throughout most wooded and semiwooded regions of the United States and Canada south of the tundra (Adamcik et al., 1979), although some populations are found in deserts and prairie habitats. Six subspecies are recognized (Brown and Amadon, 1968). Nesting primarily in woodlands, red-tails feed in open country on a wide variety of small- to medium-sized prey.

Body size. Males of this medium-sized buteo (46 cm) weigh about 1 kg, and females are approximately 20 percent heavier than the males (see table). Otherwise, the sexes look alike (Brown and Amadon, 1968).

Habitat. Red-tails are found in habitats ranging from woodlands, wetlands, pastures, and prairies to deserts (Bohm 1978b; Gates, 1972; MacLaren et al., 1988; Mader, 1978). They appear to prefer a mixed landscape containing old fields, wetlands, and pastures for foraging interspersed with groves of woodlands and bluffs and streamside trees for perching and nesting (Brown and Amadon, 1968; Preston, 1990). Red-tails build their nests close to the tops of trees in low-density forests and often in trees that are on a slope (Bednarz and Dinsmore, 1982). In areas where trees are scarce, nests are built on other structures, occasionally in cactus (Mader, 1978), on rock pinnacles or ledges, or man-made structures (Brown and Amadon, 1968; MacLaren et al., 1988). In winter, night roosts usually are in thick conifers if available and in other types of trees otherwise (Brown and Amadon, 1968).

Food habits. Red-tails hunt primarily from an elevated perch, often near woodland edges (Bohm, 1978a; Janes, 1984; Preston, 1990). Small mammals, including mice, shrews, voles, rabbits, and squirrels, are important prey, particularly during winter. Red-tails also eat a wide variety of foods depending on availability, including birds, lizards, snakes, and large insects (Bent, 1937; Craighead and Craighead, 1956; Fitch et al., 1946). In general, red-tails are opportunistic and will feed on whatever species are most abundant

---

[b]Other members of the family Accipitridae, eagles and the osprey, are covered in Sections 2.1.7 and 2.1.5, respectively.

(Brown and Amadon, 1968). Winter food choices vary with snow cover; when small mammals such as voles become unavailable (under the snow), red-tails may concentrate on larger prey, such as pheasants (Gates, 1972).

Molt. Juveniles molt into adult plumage in a gradual process from the spring (age about 14 months) to summer or early fall (Bent, 1937).

Migration. The more northerly red-tailed hawk populations are migratory while the more southerly are year-round residents (Bent, 1937).

Breeding activities and social organization. Red-tails lay one clutch per year consisting of one to three eggs, although a replacement clutch is possible if the initial clutch is lost early in the breeding season (Bent, 1937). Their nests are large and built of twigs (Bohm, 1978b). Both sexes incubate, but the male provides food for the female during incubation and the entire family following hatching (Brown and Amadon, 1968). The parents continue to feed their young after fledging while they are learning to hunt (Brown and Amadon, 1968).

Home range and resources. Red-tailed hawks are territorial throughout the year, including winter (Brown and Amadon, 1968). Trees or other sites for nesting and perching are important requirements for breeding territories and can determine which habitats are used in a particular area (Preston, 1990; Rothfels and Lein, 1983). Home range size can vary from a few hundred hectares to over 1,500 hectares, depending on the habitat (Andersen and Rongstad, 1989; Petersen, 1979). In a 10-year study in Oregon, Janes (1984) found that the size of red-tail territories and the location of boundaries between territories varied little from year to year, even though individual birds or pairs died and were replaced.

Population density. Population densities generally do not exceed 0.03 pairs per hectare, and usually are lower than 0.005 pairs per hectare (see Appendix). Populations in southern areas such as Florida can increase substantially in the winter with the influx of migrants from the more northerly populations (Bohall and Collopy, 1984).

Population dynamics. Beginning at 2 years of age, most red-tailed hawks attempt to breed, although the proportion breeding can vary by population and environmental conditions (Henny and Wight, 1970, 1972). Average clutch size varies regionally, tending to increase from east to west and from south to north (Henny and Wight, 1970, 1972). In a 10-year study of red-tails in Alberta, Canada, Adamcik et al. (1979) found that the breeding population of adults remained stable despite strong cyclical fluctuations in the density of their main prey, the snowshoe hare, over the years. The mean clutch size for the red-tail population, however, appeared to vary with prey density, from 1.7 to 2.6 eggs/nest (Adamcik et al., 1979). Over the course of the study, about 50 percent of observed nestling losses occurred within 3 to 4 weeks after hatching due to starvation. Most of the variance in yearly mortality of nestlings could be attributed to the amount of food supplied and the frequency of rain. Large raptors such as horned owls also can be important sources of mortality for red-tail nestlings in some areas (Adamcik et al., 1979).

Similar species (from general references)

- The ferruginous hawk (*Buteo regalis*), one of the larger buteos (58 cm), inhabits the dry open country of the western United States.

- The red-shouldered hawk (*Buteo lineatus*) is slightly smaller (53 cm) and feeds on snakes, frogs, crayfish, mice, and some small birds. Its range is east of the Rocky Mountains and in California, with moist mixed woodlands preferred.

- Swainson's hawk (*Buteo swainsoni*) is restricted to the open plains of the western United States. Although it is as large (53 cm) as the red-tail, it preys mostly on insects.

- The broad-winged hawk (*Buteo platypterus*) is one of the smaller buteos (41 cm) and preys on mice, frogs, snakes, and insects. It prefers woodlands and is found almost exclusively east of the Mississippi River.

- Harris' hawk (*Parabuteo unicinctus*) is similar in size (53 cm) to the red-tailed hawk but is restricted to the semiarid wood and brushlands of the southwest. This bird nests in saguaro, mesquite, and yucca and preys on rodents, lizards, and small birds.

- The rough-legged hawk (*Buteo lagopus*) is one of the larger buteos (56 cm). It winters throughout most of the United States in open country but breeds only in the high arctic of North America.

- The zone-tailed hawk (*Buteo albonotatus*) is slightly smaller (51 cm) than most buteos and feeds on rodents, lizards, fish, frogs, and small birds. It can be found in mesa and mountain country within its limited range between the southwest United States and Mexico.

- The short-tailed hawk (*Buteo brachyurus*) is the smallest buteo (39 cm) and can only be found in the southern tip of Florida in mixed woodland and grassland habitats.

General references

Brown and Amadon (1968); Craighead and Craighead (1956); Fitch et al. (1946); National Geographic Society (1987).

Red-Tailed Hawk (*Buteo jamaicensis*)

Factors	Age/Sex/ Cond./Seas.	Mean	Range or (95% CI of mean)	Location	Reference	Note No.
Body Weight (g)	A F	1,224		Michigan, Pennsylvania	Craighead & Craighead, 1956	
	A M	1,028				
	A F	1,154		sw Idaho	Steenhof, 1983	
	A M	957				
	A F	1,235		Ohio	Springer & Osborne, 1983	1
	A M	1,204				
	hatchling F	58				
	hatchling M	57				
	juvenile F	1,149				
	juvenile M	962				
Metabolic Rate (lO_2/kg-day)	A B standard MR /spring	17.7 ± 5.9 SD		Michigan/metabolism chamber	Pakpahan et al., 1989	
Metabolic Rate (kcal/kg-day)	A F basal	73			estimated	2
	A M basal	77				
	A M breeding	109		California/mountains	Soltz, 1984	3
	A F breeding	102				
	A F free-living	192	(91 - 408)		estimated	4
	A M free-living	201	(95 - 426)			
Food Ingestion Rate (g/g-day)	A F winter	0.11		Michigan/captive outdoors	Craighead & Craighead, 1956	5
	A M winter	0.10				
	A M summer	0.086				
Water Ingestion Rate (g/g-day)	A F	0.055			estimated	6
	A M	0.059				
Inhalation Rate (m^3/day)	A F	0.48			estimated	7
	A M	0.42				
Surface Area (cm^2)	A F	1,147			estimated	8
	A M	1,021				

Red-Tailed Hawk (*Buteo jamaicensis*)

Dietary Composition	Spring	Summer	Fall	Winter	Location/Habitat (measure)	Reference	Note No.
summary of 10 years:		mean ± SD			Alberta, Canada/ farm & woodlands	Adamcik et al., 1979	9
snowshoe hare		25.6 ± 19					
Richard's ground squirrel		30.4 ± 10			(% wet weight of prey brought to chicks)		
Franklin's ground squirrel		5.1 ± 2					
voles & mice		4.8 ± 2					
other mammals		7.8 ± 6					
waterfowl		16.2 ± 10					
ruffed grouse		2.0 ± 2					
sharp-tailed grouse		1.2 ± 1					
other grouse		0.9 ± 1					
other birds		6.3 ± 3					
(mammals)	(78.5)				nc Oregon/ pasture and wheat fields	Janes, 1984	9
Belding's ground squirrel	52.8						
mtn cottontail	13.1				(% wet weight of prey brought to nests; March to June)		
pocket gopher	7.3						
Townsend's ground squirrel	2.9						
(birds)	(8.5)						
Alectoris graeca	3.5						
western meadowlark	1.8						
(snakes)	(13.1)						
gopher snake	6.1						
ground squirrel		60.8			c California/foothills	Fitch et al., 1946	9
rabbit		26.5					
pocket gopher		4.3			(% wet weight of prey brought to nests)		
other mammals		2.6					
gopher snake		3.8					
whiptail lizard		0.3					
birds		1.3					

Red-Tailed Hawk (*Buteo jamaicensis*)

Population Dynamics	Age/Sex Cond./Seas.	Mean	Range	Location/Habitat	Reference	Note No.
Territory Size (ha)	A B spring	60 - 160		c California/foothills	Fitch et al., 1946	
	A B winter	697 ± 316 SD	381 - 989	s Michigan/fields, woodlots	Craighead & Craighead, 1956	
	A B fall	1,770	957 - 2,465	Colorado/upland prairie, pinyon-juniper woodlands	Andersen & Rongstad, 1989	10
Population Density	summer:	pairs/ha:				
	A B	0.0017 - 0.0050		Colorado/open aspen	McGovern & McNurney, 1986	
	A B area a	0.0004	0.0002 - 0.0005	s Michigan/fields, woodlots	Craighead & Craighead, 1956	
	A B area b	0.0012	0.0010 - 0.0013			
	A B	0.0012	0.0010 - 0.0015	Alberta, Canada/farm, woodlands	Adamcik et al., 1979	
	winter:	N/ha:				
	B B	0.014		Toronto, Canada/mixed old fields	Baker & Brooks, 1981	
	B B	0.0015 ± 0.0003 SD	0.0012 - 0.0018	s Michigan/fields, woodlots	Craighead & Craighead, 1956	
Clutch Size		2.0 ± 0.77 SD	1 - 3	c California/foothills	Fitch et al., 1946	
		2.32		Arizona/desert	Mader, 1978	
		2.2	1.9 - 2.6 /10 yrs	Alberta, Canada/farm, woodlands	Adamcik et al., 1979	
		2.11		Florida/NS	Henny & Wight, 1972	
		2.96		Oregon, Washington/NS	Henny & Wight, 1970	
Clutches/Year		1			Bent, 1937	
Days Incubation		32		Alberta, Canada	Adamcik et al., 1979	

Red-Tailed Hawk (*Buteo jamaicensis*)

Population Dynamics	Age/Sex Cond./Seas.	Mean	Range	Location/Habitat	Reference	Note No.
Growth Rate	to 1 week 1 to 2 weeks 2 to 3 weeks 3 to 4 weeks 4 to 5 weeks	20 g/day 34 g/day 39 g/day 26 g/day 10 g/day		Ohio/free-living, habitat NS	Springer and Osborne, 1983	11
Age at Fledging		45 to 46 days		California/foothills	Fitch et al., 1946	
Number Fledge per Active Nest		1.47 ± 0.25 SE 1.15 1.9 1.2	0.28 - 1.90/ 10 yrs	Oregon/pasture Alberta, Canada/farm, woodlands Idaho/canyon, shrub steppe	Janes, 1984 Adamcik et al., 1979 Steenhof & Kochert, 1985	
Number Fledge per Successful Nest		2.12 1.85		north of 42°N latitude/ North America south of 42°N latitude/ North America	Henny & Wight, 1970 Henny & Wight, 1970	12 12
Age at Sexual Maturity	B	2 years		throughout range	Henny & Wight, 1970	
Annual Mortality Rates (percent)	J B 1st year A B J B 1st year A B	62.4 20.6 ± 1.3 SE 66.0 23.9 ± 2.2 SE		north of 42°N latitude/ North America south of 42°N latitude/ North America	Henny & Wight, 1970, 1972 Henny & Wight, 1970, 1972	13 13
Longevity			maximum 18 yrs	North America/NS	Henny & Wight, 1970, 1972	
Seasonal Activity				Location		Note No.
Mating	mid-February mid-April late March	early May	early April mid-May early April	Arizona Alberta Canada south Michigan	Mader, 1978 Luttich et al., 1971 Craighead & Craighead, 1956	

Red-Tailed Hawk (*Buteo jamaicensis*)

Seasonal Activity	Begin	Peak	End	Location	Reference	Note No.
Hatching	late March mid-May late April	early June	early May mid-June early May	Arizona Alberta, Canada south Michigan	Mader, 1978 Luttich et al., 1971 Craighead & Craighead, 1956	
			mid-October late October late November	Montana, Alberta, Canada North Dakota Minnesota	Bent, 1937; Luttich et al., 1971 Bent, 1937 Bent, 1937	14
	late February mid-March early April	early March		south Michigan Maine, Montana Alberta, Canada	Craighead & Craighead, 1956 Bent, 1937 Luttich et al., 1971	15

1 Estimated from data provided by authors.
2 Estimated using equation 3-28 (Lasiewski and Dawson, 1967) and body weights from Craighead and Craighead (1956).
3 Estimated from time and energy budgets for breeding season only.
4 Estimated using equation 3-37 (Nagy, 1987) and body weights from Craighead and Craighead (1956).
5 Hawks maintained outdoors using falconer's techniques; fed lean raw beef supplemented with natural prey. Overall activity levels not described. Winter temperatures averaged 3 to 5°C and summer temperatures averaged 15°C during trials. Females weighed 1,218 g; males in winter weighed 1,147 g; males in summer weighed 855 g.
6 Estimated using equation 3-15 (Calder and Braun, 1983) and body weights from Craighead and Craighead (1956).
7 Estimated using equation 3-19 (Lasiewski and Calder, 1971) and body weights from Craighead and Craighead (1956).
8 Estimated using equation 3-21 (Meeh, 1879 and Rubner, 1883, as cited in Walsberg and King, 1978) and body weights from Craighead and Craighead (1956).
9 Percent biomass (wet weight) estimated from observations of prey brought to the nest (identified to species) and remains of prey found at the nests, using standard wet weights for each species of prey from other studies or measured in the lab.
10 Home range determined by 95 percent ellipse method; radio-tagged hawks, two of each sex.
11 Estimated from figure.
12 Summarizing data from several studies.
13 Summarizing banding recoveries prior to 1951.
14 Late departure dates.
15 Early arrival dates.

References (including Appendix)

Adamcik, R. S.; Tood, A. W.; Keith, L. B. (1979) Demographic and dietary responses of red-tailed hawks during a snowshoe hare fluctuation. Can. Field-Nat. 93: 16-27.

Andersen, D. E.; Rongstad, O. J. (1989) Home-range estimates of red-tailed hawks based on random and systematic relocations. J. Wildl. Manage. 53: 802-807.

Baker, J. A.; Brooks, R. J. (1981) Distribution patterns of raptors in relation to density of meadow voles. Condor 83: 42-47.

Bednarz, J. C.; Dinsmore, J. J. (1982) Nest-sites and habitat of red-shouldered and red-tailed hawks in Iowa. Wilson Bull. 94: 31-45.

Bent, A. C. (1937) Life histories of North American birds of prey. Part 1: Order falconiformes. Washington, DC: U.S. Government Printing Office; Smithsonian Inst. U.S. Nat. Mus., Bull. 167.

Bohall, P. G.; Collopy, M. W. (1984) Seasonal abundance, habitat use, and perch sites of four raptor species in north-central Florida. J. Field Ornithol. 55: 181-189.

Bohm, R. T. (1978a) Observation of nest decoration and food habits of red-tailed hawks. Loon 50: 6-8.

Bohm, R. T. (1978b) A study of nesting red-tailed hawks in central Minnesota. Loon 50: 129-137.

Bosakowski, T.; Smith, D. G. (1992) Comparative diets of sympatric nesting raptors in the eastern deciduous forest biome. Can. J. Zool 70: 984-992.

Brown, L.; Amadon, D. (1968) Eagles, hawks, and falcons of the world: v. 1. New York, NY: McGraw-Hill.

Calder, W. A.; Braun, E. J. (1983) Scaling of osmotic regulation in mammals and birds. Am. J. Physiol. 244: R601-R606.

Craighead, J. J.; Craighead, F. C. (1956) Hawks, owls and wildlife. Harrisburg, PA: The Stackpole Co. and Washington, DC: Wildl. Manage. Inst.

Duke, G. E.; Evanson, O. A.; Jegers, A. A. (1976) Meal to pellet intervals in 14 species of captive raptors. Comp. Biochem. Physiol. 53A: 1-6.

Duke, G. E.; Mauro, L.; Bird, D. M. (1987) Physiology. In: Pendleton, B. A.; Millsap, B. A.; Cline, K. W.; et al., eds. Raptor management techniques manual. Washington, DC: Institute for Wildlife Research, National Wildlife Federation; Sci. Tech. Ser. No. 10; pp. 262-267.

Fitch, H. S.; Swenson, F.; Tillotson, D. F. (1946) Behavior and food habits of the red-tailed hawk. Condor 48: 205-237.

Gates, J. M. (1972) Red-tailed hawk populations and ecology in east-central Wisconsin. Wilson Bull. 84: 421-433.

Gatz, T. A.; Hegdal, P. L. (1987) Local winter movements of four raptor species in central Colorado. West. Birds 17: 107-114.

Hagar, D. C., Jr. (1957) Nesting populations of red-tailed hawks and horned owls in central New York state. Wilson Bull. 69: 263-272.

Hardy, R. (1939) Nesting habits of the western red-tailed hawk. Condor 41: 79-80.

Henny, C. J.; Wight, H. M. (1970) Population ecology and environmental pollution: red-tailed and Cooper's hawks. Symposium: Population ecology of migratory birds; Patuxent Wildlife Research Center; pp. 229-249.

Henny, C. J.; Wight, H. M. (1972) Population ecology and environmental pollution: red-tailed and Cooper's hawks. U.S. Bur. Sport Fish. Wildl., Wildl. Res. Rep. 2: 229-250.

Janes, S. W. (1984) Influences of territory composition and interspecific competition on red-tailed hawk reproductive success. Ecology 65: 862-870.

Johnson, S. J. (1975) Productivity of the red-tailed hawk in southwestern Montana. Auk 92: 732-736.

Lasiewski, R. C.; Calder, W. A. (1971) A preliminary allometric analysis of respiratory variables in resting birds. Resp. Phys. 11: 152-166.

Lasiewski, R. C.; Dawson, W. R. (1967). A reexamination of the relation between standard metabolic rate and body weight in birds. Condor 69: 12-23.

Luttich, S. N.; Keith, L. B.; Stephenson, J. D. (1971) Population dynamics of the red-tailed hawk (*Buteo jamaicensis*) at Rochester, Alberta. Auk 88: 75-87.

MacLaren, P. A.; Anderson, S. H.; Runde, D. E. (1988) Food habits and nest characteristics of breeding raptors in southwestern Wyoming. Great Basin Nat. 48: 548-553.

Mader, W. J. (1978) A comparative nesting study of red-tailed hawks and Harris' hawks in southern Arizona. Auk 95: 327-337.

McGovern, M.; McNurney, J. M. (1986) Densities of red-tailed hawk nests in aspen stands in the Piceance Basin, Colorado. Raptor Res. 20: 43-45.

Meeh, K. (1879) Oberflachenmessungen des mensclichen Korpers. Z. Biol. 15: 426-458.

Nagy, K. A. (1987) Field metabolic rate and food requirement scaling in mammals and birds. Ecol. Monogr. 57: 111-128.

National Geographic Society. (1987) Field guide to the birds of North America. Washington, DC: National Geographic Society.

Nice, M. M. (1954) Problems of incubation periods in North American birds. Condor 56: 173-197.

Orians, G.; Kuhlman, J. (1956) The red-tailed hawk and great horned owl populations in Wisconsin. Condor 58: 371-385.

Pakpahan, A. M.; Haufler, J. B.; Prince, H. H. (1989) Metabolic rates of red-tailed hawks and great horned owls. Condor 91: 1000-1002.

Petersen, L. (1979) Ecology of great horned owls and red-tailed hawks in southeastern Wisconsin. Wisc. Dept. Nat. Resour. Tech. Bull. No. 111.

Poole, E. L. (1938) Weights and wing areas in North American birds. Auk 55: 511-517.

Preston, C. R. (1990) Distribution of raptor foraging in relation to prey biomass and habitat structure. Condor 92: 107-112.

Rothfels, M.; Lein, M. R. (1983) Territoriality in sympatric populations of red-tailed and Swainson's hawks. Can. J. Zool. 61: 60-64.

Rubner, M. (1883) Uber den Einfluss der Korpergrosse auf Stoff- und Kraftweschsel. Z. Biol. 19: 535-562.

Smith, D. G.; Murphy, J. R. (1973) Breeding ecology of raptors in the eastern Great Basin of Utah. Brigham Young Univ. Sci. Bull., Biol. Ser. 18: 1-76.

Soltz, R. L. (1984) Time and energy budgets of the red-tailed hawk (*Buteo jamaicensis*) in southern California. Southwest Nat. 29: 149-156.

Springer, M. A.; Kirkley, J. S. (1978) Inter- and intraspecific interactions between red-tailed hawks and great horned owls in central Ohio. Ohio J. Sci. 78: 323-328.

Springer, M. A.; Osborne, D. R. (1983) Analysis of growth of the red-tailed hawk (*Buteo jamaicensis*). Ohio J. Sci 83: 13-19.

Steenhof, K. (1983) Prey weights for computing percent biomass in raptor diets. Raptor Res. 17: 15-27.

Steenhof, K. (1987) Assessing raptor reproductive success and productivity. In: Giron Pendleton, B. A.; Millsap, B. A.; Cline, K. W., et al., eds. Raptor management techniques manual. Washington, DC: National Wildlife Federation; pp. 157-170.

Steenhof, K.; Kochert, M. N. (1985) Dietary shifts of sympatric buteos during a prey decline. Oecologia 66: 6-16.

U. S. Department of Interior. (1979) Snake River birds of prey special research report. Boise, ID: Bureau of Land Management.

Walsberg, G. E.; King, J. R. (1978) The relationship of the external surface area of birds to skin surface area and body mass. J. Exp. Biol. 76: 185-189.

2.1.7. Bald Eagle (eagles)

Order *Falconiformes*, Family *Accipitridae*. Eagles have long rounded wings, large hooked bills, sharp talons, and are the largest birds of prey in the United States. They swoop down on their prey at high speeds, and their diet varies by species and considerably by habitat. In most species, the male is smaller than the female, but otherwise the sexes are similar in appearance. This family also includes kites and hawks.

Selected species

The bald eagle (*Haliaeetus leucocephalus*), our national symbol, is a federally designated endangered species. Relatively common in Alaska, populations in the lower 48 States have been seriously diminished, although they are recovering in some areas. Bald eagles are most commonly sighted in coastal areas or near rivers or lakes. Bald eagles are primarily carrion feeders.

Body size. Females are significantly larger than males, but otherwise the sexes look alike (Brown and Amadon, 1968). Body size increases with latitude and is the sole basis by which the northern and southern subspecies are divided (Snow, 1973). Length from bill tip to tail tip averages 81 cm in the more northerly populations.

Habitat. Bald eagles generally are restricted to coastal areas, lakes, and rivers (Brown and Amadon, 1968), although some may winter in areas not associated with water (Platt, 1976). Preferred breeding sites include proximity to large bodies of open water and large nest trees with sturdy branches (often conifers) and areas of old-growth timber with an open and discontinuous canopy (Andrew and Mosher, 1982; Anthony et al., 1982; Grubb, 1980; Peterson, 1986). In an analysis of more than 200 nests, Grubb (1980) found 55 percent within 46 m of a shoreline and 92 percent within 183 m of shore. During migration and in winter, conifers often are used for communal roosting both during the day and at night, perhaps to minimize heat loss (Anthony et al., 1982; Stalmaster, 1980). Mature trees with large open crowns and stout, horizontal perching limbs are preferred for roosting in general (Anthony et al., 1982; Chester et al., 1990). Bald eagles reach maximum densities in areas of minimal human activity and are almost never found in areas of heavy human use (Peterson, 1986).

Food habits. Primarily carrion feeders, bald eagles eat dead or dying fish when available but also will catch live fish swimming near the surface or fish in shallow waters (Brown and Amadon, 1968). In general, bald eagles can be described as opportunistic feeders, taking advantage of whatever food source is most plentiful and easy to scavenge or to capture, including birds and mammals (Brown and Amadon, 1968; Green, 1985; Watson et al., 1991). In many areas, especially in winter, waterfowl, killed or injured by hunters, and shore birds are an important food source (Todd et al., 1982). Eagles forage in upland areas in the winter when surface waters are frozen over, consuming carrion including rabbits, squirrels, and dead domestic livestock such as pigs and chickens (Brown and Amadon, 1968; Harper et al., 1988). Bald eagles also have been known to steal food from other members of their own species as well as from hawks, osprey, gulls, and mergansers (Grubb, 1971; Jorde and Lingle, 1988; Sobkowiak and Titman, 1989). This

may occur when there is a shortage of a primary food source, such as fish, and an abundance of other prey such as waterfowl being used by other predatory birds (Jorde and Lingle, 1988). Some prey are important to a few populations; for example, in the Chesapeake Bay region, turtles are consumed during the breeding season (Clark, 1982), and at Amchitka Island in Alaska, sea otter pups are found regularly in bald eagle nests (Sherrod et al., 1975). In the Pacific Northwest during the breeding season, Watson et al. (1991) found that bald eagles hunted live prey 57 percent of the time, scavenged for 24 percent of their prey, and pirated 19 percent (mostly from gulls or other eagles). Because bald eagles scavenge dead or dying prey, they are particularly vulnerable to environmental contaminants and pesticides (e.g., from feeding on birds that died from pesticides, consuming lead shot from waterfowl killed or disabled by hunters) (Henny and Anthony, 1989; Harper et al., 1988; Lingle and Krapu, 1988). Bald eagles also are vulnerable to biomagnification of contaminants in food chains. For example, near Lake Superior (WI), herring gulls, which were consumed by over 20 percent of nesting bald eagle pairs, were found to be a significant source of DDE and PCB intake by the eagles (Kozie and Anderson, 1991). The gulls contained higher contaminant levels than the local fish because of their higher trophic level.

Molt. Adult eagles molt yearly. In northern populations, molting occurs from late spring to early fall; in southern populations, molting may be initiated earlier (McCollough, 1989). It is likely that the molt is not complete, and that some feathers are retained for 2 years. Young bald eagles generally molt into their adult plumage by their fifth year (McCollough, 1989).

Migration. Bald eagles migrate out of areas where lakes are completely frozen over in winter, but will remain as far north as the availability of open water and a reliable food supply allow (Brown and Amadon, 1968). Areas with ice-free waterways, such as the Columbia River estuary in Washington and Oregon, may support both resident and migratory populations in the winter (Watson et al., 1991). The far northern breeding populations migrate south for the winter and often congregate in areas with abundant food, particularly the Mississippi Valley and the northwestern States (Snow, 1973). Some populations of eagles that breed in southern latitudes (e.g., Arizona, Florida) show a reverse migration and migrate north in midsummer (following breeding), returning south in early autumn or winter (Brown and Amadon, 1968; Grubb et al., 1983).

Breeding activities and social organization. Bald eagles have been observed to nest successfully at 4 years of age, but most do not breed until at least their fifth year (Nye, 1983). Breeding pairs remain together as long as both are alive (Brown and Amadon, 1968). Large stick nests (approximately 1.5 m across and 0.6 m deep) are built near water and most often in a large tree, but sometimes on rocky outcrops or even on the ground on some islands (Brown and Amadon, 1968; Grubb, 1980). In the absence of disturbance, the same nest site may be used for many years (Nash et al., 1980). In Florida, eggs are laid in late autumn or winter, while over the rest of the eagle's range, mating and egg laying occur in spring (Brown and Amadon, 1968). Clutch sizes are larger in the north, and both sexes take responsibility for feeding the young (Brown and Amadon, 1968). Young fledge at about 10 to 12 weeks of age; after leaving the nest, they are still dependent on their parents for several weeks and often return to the nest for food (Sprunt et al., 1973). After nesting, large groups will often gather at sites with plentiful food

resources, such as along rivers following a salmon spawn (Fitzner and Hanson, 1979; Keister et al., 1987; McClelland, 1973).

Home range and resources. During the breeding season, eagles require large areas in the vicinity of open water, with an adequate supply of nesting trees (Brown and Amadon, 1968). Distance from human disturbance is an important factor in nest site selection, and nests have been reported to fail as a result of disturbance (Andrew and Mosher, 1982). During incubation and brooding, eagles show territorial defense of an area around the nest site. Following fledging, there is little need for nest defense, and eagles are opportunistic in their search for abundant sources of prey (Mahaffy and Frenzel, 1987). During winter, eagles roost communally in large aggregations and share a foraging home range. For example, Opp (1980) described a population of 150 eagles that fed on meadow voles in a 250-ha flooded field for a 4-week period. This group also established a communal night roost in the vicinity.

Population density. Because population density depends strongly on the configuration of the surface water bodies used for foraging, few investigators have published explicit density estimates on an area basis; most report breeding densities along a shoreline on a linear basis. During the breeding season, 0.03 to 0.4 pairs have been recorded per km shore (see table). Eagles migrating south from their summer territories in Canada have aggregated in communal roosts of up to 400 eagles in a 40-ha area (Crenshaw and McClelland, 1989). In the winter, communal roost sites may also contain large numbers of eagles. Opp (1980) described a group of 150 eagles that roosted and foraged together in the Klamath Basin (OR/CA), and communal night roosts of up to 300 eagles in Oregon in late winter.

Population dynamics. Not all adults in an area are part of the breeding population. Some pairs may establish territories and not breed, while others may not even pair. The percentage of adults breeding and the breeding success of those that do vary with local food abundance, weather, and habitat conditions (Hansen, 1987; Hansen and Hodges, 1985; McAllister et al., 1986). In past years, bioaccumulation of organochlorine pollutants reduced the reproductive success of bald eagles. Now, in many areas, these raptors are reproducing at rates similar to those prior to the widespread use of these pesticides (Green, 1985). Eagles lay one clutch per year, although replacement clutches may be laid upon loss of the initial one (Sherrod et al., 1987). Very little is known about mortality rates of bald eagles; Grier (1980) concluded from population models that adult survival is more important than reproductive rate to the continued success of bald eagle populations. In captivity, bald eagles have lived for up to 50 years (Snow, 1973), and one wild eagle, banded and recaptured in Alaska, was estimated to be almost 22 years old (Cain, 1986). Upon loss of an initial clutch, bald eagles may lay replacement clutches if sufficient time remains (Sherrod et al., 1987).

Similar species (from general references)

- The golden eagle (*Aquila chrysaetos*) is similar in size (81 cm) to the bald eagle, and its range encompasses all but the southeastern United States. Small mammals, snakes, birds, and carrion are primary prey items, and golden eagles prefer mountainous or hilly terrain.

General references

Brown and Amadon (1968); Green (1985); Peterson (1986); Stalmaster and Gessaman (1982, 1984).

Bald Eagle (*Haliaeetus leucocephalus*)

Factors	Age/Sex/ Cond./Seas.	Mean	Range or (95% CI of mean)	Location or subspecies	Reference	Note No.
Body Weight (g)	J F summer	5,089	4,359 - 5,756	Alaska	Imler & Kalmbach, 1955	1
	J M summer	4,014	3,524 - 4,568			
	A F	4,500		Florida	Wiemeyer, 1991 (pers. comm.)	
	A M	3,000				
					Krantz et al., 1970	
	egg	120.6 ± 8.2 SD	108 - 134	Wisconsin	Krantz et al., 1970	
	egg	102.5 ± 17.9 SD	71 - 125	Florida		
					Bortolotti, 1984b	
	at hatching	91.5 ± 5.2 SD		Saskatchewan, Canada		
	nestlings:				Bortolotti, 1984a,b	
	M 10 days	500 (est.)		Saskatchewan, Canada		2
	M 30 days	2,700 (est.)				
	M 50 days	3,600 (est.)				
	M 60 days	4,066 ± 35.1 SE	3,575 - 4,500			
					Bortolotti, 1984a,b	
	F 10 days	500 (est.)		Saskatchewan, Canada		2
	F 30 days	3,000 (est.)				
	F 50 days	4,600 (est.)				
	F 60 days	5,172 ± 46.5 SE	4,800 - 5,600			
Metabolic Rate (kcal/kg-day)	free-living			Connecticut	Craig et al., 1988	3
	A winter	99				
	J winter	111				
	A F free-living	135	(62 - 290)		estimated	4
	A M free-living	143	(66 - 307)			

Bald Eagle (*Haliaeetus leucocephalus*)

Factors	Age/Sex/ Cond./Seas.	Mean	Range or (95% CI of mean)	Location or subspecies	Reference	Note No.
Food Ingestion Rate (g/g-day)	winter:					
	B B salmon	0.092 ± 0.026 SD		Utah (captive)	Stalmaster & Gessaman, 1982	
	B B rabbit	0.075 ± 0.013 SD				
	B B duck	0.065 ± 0.012 SD				
	A B	0.12		Washington (free-flying)	Stalmaster & Gessaman, 1984	5
	subadult B	0.10				
	juvenile B	0.091				
	A B	0.12		Connecticut (free-flying)	Craig et al., 1988	6
	juvenile B	0.14				
Water Ingestion Rate (g/g-day)	A F	0.035			estimated	7
	A M	0.037				
Inhalation Rate (m^3/day)	A F	1.43			estimated	8
	A M	1.19				
Surface Area (cm^2)	A F	2,970			estimated	9
	A M	2,530				

Dietary Composition	Spring	Summer	Fall	Winter	Location/Habitat (measure)		Note No.
mallard				32	Washington/river	Fitzner & Hanson, 1979	
American widgeon				9			
American coot				9	(% biomass; prey remains found below communal roost)		
other birds				3			
Chinook salmon				21			
sucker				4			
European carp				1			
other fish				1			
unaccounted				20			

Bald Eagle (*Haliaeetus leucocephalus*)

Dietary Composition	Spring	Summer	Fall	Winter	Location/Habitat (measure)	Reference	Note No.
brown bullhead		24.8			Maine/inland river	Todd et al., 1982	
white sucker		19.5					
chain pickerel		20.1			(% occurrence in pellets)		
smallmouth bass		3.8					
white perch		3.6			samples from all seasons		
other fish		4.9			except winter		
black duck		3.0					
other birds		13.5					
mammals		6.8					
(fish)		(57.6)			central Arizona/desert	Haywood & Ohmart, 1986	
channel catfish		21.8			scrub, riparian		
Sonora sucker		8.6					
carp		17.3			(% biomass; prey observed		
other fish		8.5			brought to nest or found at		
(birds)		(14.1)			nests)		
American coot		8.1					
great blue heron		4.4					
(mammals)		(28.1)					
desert cottontail		8.1					
jackrabbit		14.9					
rock squirrel		1.1					
(reptiles)		(0.2)					
pink salmon		15.5			Alaska/coastal	Ofelt, 1975	
herring		32.0					
trout		4.5			(% frequency of occurrence;		
other fish		24.0			prey observed brought to		
other animals		24.0			the nest)		

Bald Eagle (*Haliaeetus leucocephalus*)

Population Dynamics	Age/Sex Cond./Seas.	Mean	Range	Location/Habitat	Reference	Note No.
Territory Area (ha)	pair spring	3,494 ± 2,520 SD	1,821 - 6,392	Arizona/desert, riparian river	Haywood & Ohmhart, 1983	
Territory Length (km)	pair pair	3.5 15.8	1.4 - 7.2 11.1 - 26.6	Washington/SJ Islands; Grays Harbor	Grubb, 1980	
Territory Radius (km)	pair incubat. pair brooding	0.56 ± 0.18 SE 0.72 ± 0.21 SE		Minnesota/lake, woods	Mahaffy & Frenzel, 1987	
Winter Home Range (ha)	J B winter A B winter	1,830 ± 1,460 SD 1,880 ± 900 SD		Missouri/lake	Griffin & Baskett, 1985	
Foraging Distance (km)	B B winter	3 to 7		Connecticut/river	Craig et al., 1988	
Population Density (pair/km shore)	summer summer	0.38 0.035 0.026 0.045		se Alaska/riverine WY, ID, MT/: Yellowstone Continental Snake	Hansen, 1987 Swenson et al., 1986	
Clutch Size		2 2.3	1 - 3 1 - 4	NS/NS PA, DE, MD, NJ	Brown & Amadon, 1968 Schmid, 1966-67	
Clutches/Year		1		NS/NS	Sherrod et al., 1987	
Days Incubation		35	34 - 38	Maryland (captive)	Maestrelli & Wiemeyer, 1975	
Age at Fledging (days)	M F	79.9 ± 1.08 SE 83.0 ± 0.94 SE		Saskatchewan/lake	Bortolotti, 1989	
Number Fledge per Active Nest		1.01 1.28 0.90 1.14 1.00 ± 0.06 SE	0.58 - 1.22/10 yr 1.07 - 1.58/9 yr 0.76 - 1.14/7 yr 0 - 3	California/NS Montana/NS Washington/NS Florida/NS Alaska/NS	Henny & Anthony, 1989 Henny & Anthony, 1989 Henny & Anthony, 1989 McEwan & Hirth, 1979 Sprunt et al., 1973	

Bald Eagle (*Haliaeetus leucocephalus*)

Population Dynamics	Age/Sex Cond./Seas.	Mean	Range	Location/Habitat	Reference	Note No.
Number Fledge per Successful Nest		1.65 ± 0.26 SD 1.35 ± 0.11 SD 2.2 1.64	 1.22 - 1.48/6 yr 1 - 3 	Arizona/desert scrub, river Washington/San Juan Island PA, DE, MD, NJ/NS ID, MT, WY/river, lake	Grubb et al., 1983 Grubb et al., 1983 Schmid, 1966-67 Swenson et al., 1986	
Age at Sexual Maturity	B	4	3 - 5	United States/NS	Nye, 1983	
Annual Mortality (percent)	A B fledging to 1 yr	5.4 89.3		Alaska/Amchitka Island	Sherrod et al., 1977	
Longevity	A B		up to 50 yrs	captivity	Snow, 1973	
Seasonal Activity	Begin	Peak	End	Location	Reference	Note No.
Mating/Laying	late September December late October February early March late March	 late December late March	November late January March late April early April	Florida, Texas Arizona se United States MD, VA, DE WY, MT, ID Vancouver BC	Mager, 1977 Grubb et al., 1983 USFWS, 1989 LeFranc & Cline, 1983 Swenson et al., 1986 Brown & Amadon, 1968	10
Fledging	April early July	 late July late August	May mid-August	s Louisiana WY, MT, ID se Alaska	Harris et al., 1987 Swenson et al., 1986 Hansen, 1987	
Fall Migration	 early October late October November	June November December/January December	 mid-December January	Arizona Montana sc Oregon, n California se Alaska	Grubb et al., 1983 Crenshaw & McClelland, 1989 Keister et al., 1987 Hodges et al., 1987	
Spring Migration	 late March early March	December April early April		Arizona sc Oregon, n California WY, MT, ID Illinois	Grubb et al., 1983 Keister et al., 1987 Swenson et al., 1986 Sabine, 1981	

Bald Eagle (*Haliaeetus leucocephalus*)

1 Cited in Maestrelli and Wiemeyer (1975) and Bortolotti (1984a); juveniles up to 3 years of age.
2 Estimated from Figure 4.
3 Daily energy budget for free-living eagles based on time-activity budgets and metabolic models; assuming 4.5 kg eagle.
4 Estimated using equation 3-37 (Nagy, 1987) and body weights from Imler and Kalmbach (1955).
5 Estimated from observed captures of preweighed salmon provided at feeding stations. Eagle body weight assumed to be 4.5 kg. Some feeding may have occurred elsewhere.
6 Estimate of food consumed based on observed feeding behaviors and an eagle body weight of 4.5 kg.
7 Estimated using equation 3-15 (Calder and Braun, 1983) and body weights from Imler and Kalmbach (1955).
8 Estimated using equation 3-19 (Lasiewski and Calder, 1971) and body weights from Imler and Kalmbach (1955).
9 Estimated using equation 3-21 (Meeh, 1879 and Rubner, 1883, as cited in Walsberg and King, 1978) and body weights from Imler and Kalmbach (1955).
10 Cited in Green, 1985.

References (including Appendix)

Andrew, J. M.; Mosher, J. A. (1982) Bald eagle nest site selection and nesting habitat in Maryland. J. Wildl. Manage. 46: 382-390.

Anthony, R. G.; Knight, R. L.; Allen, G. T.; et al. (1982) Habitat use by nesting and roosting bald eagles in the Pacific Northwest. Trans. North Am. Wildl. Nat. Resour. Conf. 47: 332-342.

Bortolotti, G. R. (1984a) Sexual size dimorphism and age-related size variation in bald eagles. J. Wildl. Manage. 48: 72-81.

Bortolotti, G. R. (1984b) Physical development of nestling bald eagles with emphasis on the timing of growth events. Wilson Bull. 96: 524-542.

Bortolotti, G. R. (1989) Factors influencing the growth of bald eagles in north central Saskatchewan. Can. J. Zool. 67: 606-611.

Brown, L.; Amadon, D. (1968) Eagles, hawks, and falcons of the world: v. 1. New York, NY: McGraw-Hill.

Cain, S. L. (1986) A new longevity record for the bald eagle. J. Field Ornithol. 57: 173.

Calder, W. A.; Braun, E. J. (1983) Scaling of osmotic regulation in mammals and birds. Am. J. Physiol. 244: R601-R606.

Chester, D. N.; Stauffer, D. F.; Smith, T. J.; et al. (1990) Habitat use by nonbreeding bald eagles in North Carolina. J. Wildl. Manage. 54: 223-234.

Chura, N. J.; Stewart, P. A. (1967) Care, food consumption, and behavior of bald eagles used in DDT tests. Wilson Bull. 79: 441-458.

Clark, W. S. (1982) Turtles as a food source of nesting bald eagles in the Chesapeake Bay region. J. Field Ornithol. 53: 49-51.

Craig, R. J.; Mitchell, E. S.; Mitchell, J. E. (1988) Time and energy budgets of bald eagles wintering along the Connecticut River. J. Field Ornithol. 59: 22-32.

Crenshaw, J. G.; McClelland, B. R. (1989) Bald eagle use of a communal roost. Wilson Bull. 101: 626-633.

Dugoni, J. A.; Zwank, P. J.; Furman, G. C. (1986) Food of nesting bald eagles in Louisiana. Raptor Res. 20: 124-127.

Duke, G. E.; Evanson, O. A.; Jegers, A. A. (1976) Meal to pellet intervals in 14 species of captive raptors. Comp. Biochem. Physiol. 53A: 1-6.

Duke, G. E.; Mauro, L.; Bird, D. M. (1987) Physiology. In: Pendleton, B. A.; Millsap, B. A.; Cline, K. W.; et al., eds. Raptor management techniques manual. Washington, DC: Institute for Wildlife Research, National Wildlife Federation; Sci. Tech. Ser. No. 10; pp. 262-267.

Dunning, J. B., Jr. (1984) Body weights of 686 species of North American birds. Western Bird Banding Association, Monograph No. 1. Cave Creek, AZ: Eldon Publishing.

Dunstan, T. C.; Harper, J. F. (1975) Food habits of bald eagles in north-central Minnesota. J. Wildl. Manage. 39: 140-143.

Dzus, E. H.; Gerrard, J. M. (1989) Interlake variations of bald eagle, *Haliaeetus leucocephalus*, populations in north-central Saskatchewan. Can. Field-Nat. 103: 29-33.

Fielder, P. C. (1982) Food habits of bald eagles along the mid-Columbia River, Washington. Murrelet 63: 46-50.

Fielder, P. C.; Starkey, R. G. (1980) Wintering bald eagle use along the upper Columbia River, Washington. In: Knight, R. L.; Allen, G. T.; Stalmaster, M. V.; et al., eds. Proceedings of Washington bald eagle symposium, June; Seattle, WA. Seattle, WA: The Nature Conservancy; pp. 177-193.

Fitzner, R. E.; Hanson, W. C. (1979) A congregation of wintering bald eagles. Condor 81: 311-313.

Fitzner, R. E.; Watson, D. G.; Rickard, W. (1980) Bald eagles of the Hanford National Environmental Research Park. In: Knight, R. L.; Allen, G. T.; Stalmaster, M. V.; et al., eds. Proceedings of Washington bald eagle symposium, June; Seattle, WA. Seattle, WA: The Nature Conservancy; pp. 207-218.

Frenzel, R. W.; Anthony, R. G. (1989) Relationship of diets and environmental contaminants in wintering bald eagles. J. Wildl. Manage. 53: 792-802.

Gessaman, J. A.; Fuller, M. R.; Pekins, P. J.; et al. (1991) Resting metabolic rate of golden eagles, bald eagles, and barred owls with a tracking transmitter or an equivalent load. Wilson Bull. 103: 261-265.

Green, N. (1985) The bald eagle. Audubon Wildl. Rep. 508-531.

Grier, J. W. (1977) Quadrant sampling of a nesting population of bald eagles. J. Wildl. Manage. 41: 438-443.

Grier, J. W. (1980) Modeling approaches to bald eagle population dynamics. Wildl. Soc. Bull. 8: 316-322.

Grier, J. W. (1982) Ban of DDT and subsequent recovery of reproduction in bald eagles. Science 218: 1232-1235.

Griffin, C. R.; Baskett, T. S. (1985) Food availability and winter range sizes of immature and adult bald eagles. J. Wildl. Manage. 49: 592-594.

Grubb, T. C. (1971) Bald eagles stealing fish from common mergansers. Auk 88: 928-292.

Grubb, T. G. (1976) A survey and analysis of nesting bald eagles in western Washington [master's thesis]. Seattle, WA: University of Washington.

Grubb, T. G. (1980) An evaluation of bald eagle nesting in western Washington. In: Knight, R. L.; Allen, G. T.; Stalmaster, M. V.; et al., eds. Proceedings of Washington bald eagle symposium, June; Seattle, WA. Seattle, WA: The Nature Conservancy; pp. 87-103.

Grubb, T. G.; Hensel, R. J. (1978) Food habits of nesting bald eagles on Kodiak Island, Alaska. Murrelet 59: 70-72.

Grubb, T. G.; Knight, R. L.; Rubink, D. M.; et al. (1983) A five year comparison of bald eagle productivity in Washington and Arizona. In: Bird, D. M.; Seymour, N. R.; Gerrard, J. M., eds. Biology and management of bald eagles and ospreys. St. Anne de Bellvue, Quebec: Harpell Press; pp. 35-45.

Hansen, A. J. (1987) Regulation of bald eagle reproductive rates in southeast Alaska. Ecology 68: 1387-1392.

Hansen, A. J.; Hodges, J. I. (1985) High rates of non-breeding adult bald eagles in southeastern Alaska. J. Wildl. Manage. 49: 454-458.

Harper; R. G.; Hopkins, D. S.; Dunstan, T. C. (1988) Nonfish prey of wintering bald eagles in Illinois. Wilson Bull. 100: 688-690.

Harris, J. O.; Zwank, P. J.; Dugoni, J. A. (1987) Habitat selection and behavior of nesting bald eagles in Louisiana. J. Raptor Res. 21: 27-31.

Haywood, D. D.; Ohmart, R. D. (1983) Preliminary report on habitat utilization by two pairs of breeding bald eagles in Arizona. In: Bird, D. M.; Seymour, N. R.; Gerrard, J. M., eds. Biology and management of bald eagles and ospreys. St. Anne de Bellvue, Quebec: Harpell Press; pp. 87-94.

Haywood, D. D.; Ohmart, R. D. (1986) Utilization of benthic-feeding fish by inland breeding bald eagles. Condor 88: 35-42.

Henny, C. J.; Anthony, R. G. (1989) Bald eagle and osprey. Natl. Wildl. Fed. Sci. Tech. Ser. No. 12: 66-82.

Hensel, R. J.; Troyer, W. A. (1964) Nesting studies of the bald eagle in Alaska. Condor 66: 282-286.

Herrick, F. H. (1932) Daily life of the American eagle: early phase. Auk 49: 307-323.

Hodges, J. I.; King, J. G. (1979) Resurvey of the bald eagle breeding population in southeast Alaska. J. Wildl. Manage. 43: 219-221.

Hodges, J. I.; Boeker, E. L.; Hansen, A. J. (1987) Movements of radio-tagged bald eagles, *Haliaeetus leucocephalus*, in and from southeastern Alaska. Can. Field-Nat. 101: 136-140.

Howard, R. P.; van Daele, L. J. (1980) An overview of the status of bald eagles in Idaho. In: Knight, R. L.; Allen, G. T.; Stalmaster, M. V.; et al., eds. Proceedings of Washington bald eagle symposium, June; Seattle, WA. Seattle, WA: The Nature Conservancy; pp. 23-34.

Hulce, H. (1886) Eagles breeding in captivity. Forest and Stream 27: 327.

Hulce, H. (1887) Eagles breeding in captivity. Forest and Stream 28: 392.

Imler, R. H.; Kalmbach, E. R. (1955) The bald eagle and its economic status. U.S. Fish Wildl. Ser. Circ. 30.

Jorde, D. G.; Lingle, G. R. (1988) Kleptoparasitism by bald eagles wintering in south-central Nebraska. J. Field Ornithol. 59: 183-188.

Keister, G. P., Jr.; Anthony, R. G.; Holbo, H. R. (1985) A model of energy consumption in bald eagles: an evaluation of night communal roosting. Wilson Bull. 97: 148-160.

Keister, G. P., Jr.; Anthony, R. G.; O'Neill, E. J. (1987) Use of communal roosts and foraging areas by bald eagles wintering in the Klamath Basin. J. Wildl. Manage. 51: 415-420.

Kozie, K. D.; Anderson, R. K. (1991) Productivity, diet, and environmental contaminants in bald eagles nesting near the Wisconsin shoreline of Lake Superior. Arch. Environ. Contam. Toxicol. 20: 41-48.

Krantz, W. C.; Mulhern, B. M.; Bagley, G. E.; et al. (1970) Organochlorine and heavy metal residues in bald eagle eggs. Pestic. Monit. J. 4: 136-40.

Lasiewski, R. C.; Calder, W. A. (1971) A preliminary allometric analysis of respiratory variables in resting birds. Resp. Phys. 11: 152-166.

LeFranc, M. N., Jr.; Cline, K. W. (1983) The occurrence of birds as prey at active bald eagle nests in the Chesapeake Bay region. In: Bird, D. M.; Seymour, N. R.; Gerrard, J. M., eds. Biology and management of bald eagles and ospreys. St. Anne de Bellvue, Quebec: Harpell Press; pp. 79-86.

Lingle, G. R.; Krapu, G. L. (1988) Ingestion of lead shot and aluminum bands by bald eagles during winter in Nebraska. Wilson Bull. 100: 326-327.

Maestrelli, J. R.; Wiemeyer, S. N. (1975) Breeding bald eagles in captivity. Wilson Bull. 87: 45-53.

Mager, D. (1977) The life and the future of the southern bald eagle. In: Proceedings of the bald eagle conference on eagle movements. Apple River, IL: Eagle Valley Environmentalists; pp. 115-117.

Mahaffy, M. S.; Frenzel, L. D. (1987) Territorial responses of northern bald eagles near active nests. J. Wildl. Manage. 51: 551-554.

McAllister, K. R.; Owens, T. E.; Leschner, L.; et al. (1986) Distribution and productivity of nesting bald eagles in Washington, 1981-1985. Murrelet 67: 45-50.

McClelland, B. R. (1973) Autumn concentrations of bald eagles in Glacier National Park. Condor 75: 121-123.

McCollough, M. A. (1989) Molting sequence and aging of bald eagles. Wilson Bull. 101: 1-10.

McEwan, L. C.; Hirth, D. H. (1979) Southern bald eagle productivity and nest site selection. J. Wildl. Manage. 43: 585-594.

McEwan, L. C.; Hirth, D. H. (1980) Food habits of the bald eagle in north-central Florida. Condor 82: 229-231.

Meeh, K. (1879) Oberflachenmessungen des mensclichen Korpers. Z. Biol. 15: 426-458.

Murphy, J. R. (1965) Nest site selection by the bald eagle in Yellowstone National Park. Proc. Utah Acad. Sci. Arts and Letters 12: 261-264.

Nagy, K. A. (1987) Field metabolic rate and food requirement scaling in mammals and birds. Ecol. Monogr. 57: 111-128.

Nash, C.; Pruett-Jones, M.; Allen, T. G. (1980) The San Juan Islands bald eagle nesting survey. In: Knight, R. L.; Allen, G. T.; Stalmaster, M. V.; et al., eds. Proceedings of Washington bald eagle symposium, June; Seattle, WA. Seattle, WA: The Nature Conservancy; pp. 105-176.

Nicholson, D. J. (1952) Little known facts about Florida bald eagles. Florida Nat. 25: 23-26.

Nye, P. E. (1983) A biological and economic review of the hacking process for the restoration of bald eagles. In: Bird, D. M.; Seymour, N. R.; Gerrard, J. M., eds. Biology and management of bald eagles and ospreys. St. Anne de Bellvue, Quebec: Harpell Press; pp. 127-135.

Ofelt, C. H. (1975) Food habits of nesting bald eagles in southeast Alaska. Condor 77: 337-338.

Opp, R. R. (1980) Status of the bald eagle in Oregon - 1980. In: Knight, R. L.; Allen, G. T.; Stalmaster, M. V.; et al., eds. Proceedings of Washington bald eagle symposium, June; Seattle, WA. Seattle, WA: The Nature Conservancy; pp. 35-48.

Peterson, A. (1986) Habitat suitability index models: bald eagle (breeding season). U.S. Fish Wildl. Serv. Biol. Rep. 82(10.126); 25 pp.

Platt, J. B. (1976) Bald eagles wintering in Utah desert. American Birds 30: 783-788.

Ricklefs, R. E. (1973) Fecundity, mortality and avian demography. In: Farner, D. S., ed. Breeding biology of birds. Washington, DC: National Academy of Sciences.

Rubner, M. (1883) Uber den Einfluss der Korpergrosse auf Stoff- und Kraftweschsel. Z. Biol. 19: 535-562.

Sabine, N. (1981) Ecology of bald eagles wintering in southern Illinois [master's thesis] (abstract). Carbondale, IL: Southern Illinois University.

Schmid, F. C. (1966-67) Numbers of eggs and young of bald eagles in four middle Atlantic states. Cassinia 50: 15-17.

Sherrod, S. K.; Estes, J. A.; White, C. M. (1975) Depredation of sea otter pups by bald eagles at Amchitka Island, Alaska. J. Mammal. 56: 701-703.

Sherrod, S. K.; White, C. M.; Williamson, F. S. (1977) Biology of the bald eagle on Amchitka Island, Alaska. Living Bird 15: 143-182.

Sherrod, S. K.; Jenkins, M. A.; McKee, G.; et al. (1987) Using wild eggs for production of bald eagles for reintroduction into the southeastern United States. In: Odom, R. R.; Riddleberger, K. A.; Ozier, J. C., eds. Proceedings of the third southeastern nongame and endangered wildlife symposium; August; Athens, GA. Atlanta, GA: Georgia Dept. of Natural Resources; pp. 14-20.

Snow, C. (1973) Habitat management series for endangered species report number 5: southern bald eagle *Haliaeetus leucocephalus leucocephalus* and northern bald eagle *Haliaeetus leucocephalus alascansus*. Denver, CO: Bureau of Land Management; BLM-YA-PT-81-019-6601.

Snyder, N. F.; Wiley, J. W. (1976) Sexual size dimorphism in hawks and owls of North America. Ornithol. Monogr. 20.

Sobkowiak, S.; Titman, R. D. (1989) Bald eagles killing American coots and stealing coot carcasses from greater black-backed gulls. Wilson Bull. 101: 494-496.

Sprunt, A., VI; Robertson, W. B., Jr.; Postupalsky, S.; et al. (1973) Comparative productivity of six bald eagle populations. Trans. North Am. Wildl. Nat. Resour. Conf. 38: 96-106.

Stalmaster, M. V. (1980) Management strategies for wintering bald eagles in the Pacific Northwest. In: Knight, R. L.; Allen, G. T.; Stalmaster, M. V.; et al., eds. Proceedings of Washington bald eagle symposium, June; Seattle, WA. Seattle, WA: The Nature Conservancy; pp. 49-67.

Stalmaster, M. V.; Gessaman, J. A. (1982) Food consumption and energy requirements of captive bald eagles. J. Wildl. Manage. 46: 646-654.

Stalmaster, M. V.; Gessaman, J. A. (1984) Ecological energetics and foraging behavior of overwintering bald eagles. Ecol. Monogr. 54: 407-428.

Stickel, L. F.; Chura, N. J.; Stewart, P. A.; et al. (1966) Bald eagle pesticide relations. Trans. North Am. Wildl. Natur. Resour. Conf. 21: 190-200.

Swenson, J. E. (1975) Ecology of the bald eagle and osprey in Yellowstone National Park [master's thesis]. Bozeman, MT: Montana State University.

Swenson, J. E.; Alt, K. L.; Eng, R. L. (1986) Ecology of bald eagles in the Greater Yellowstone ecosystem. Wildl. Monogr. 95: 1-46.

Todd, C. S.; Young, L. S.; Owen, R. B., Jr.; et al. (1982) Food habits of bald eagles in Maine. J. Wildl. Manage. 46: 636-645.

United States Fish and Wildlife Service (USFWS). (1989) Recovery plan: southeastern states bald eagle. Atlanta, GA: U.S. Fish and Wildlife Service, Southeast Region.

Vermeer, K.; Morgan, K. H. (1989) Nesting population, nest sites, and prey remains of bald eagles in Barkley Sound, British Columbia. Northwest. Nat. 70: 21-26.

Walsberg, G. E.; King, J. R. (1978) The relationship of the external surface area of birds to skin surface area and body mass. J. Exp. Biol. 76: 185-189.

Watson, J. W.; Garrett, M. G.; Anthony, R. G. (1991) Foraging ecology of bald eagles in the Columbia River estuary. J. Wildl. Manage. 55: 492-499.

Weaver, J. (1980) Habitat management program: threatened and endangered plants and animals. U.S. Forest Serv., Bridger-Teton Nat. Forest, Jackson Hole, WY; 111 pp.

2.1.8. American Kestrel (falcons)

Order *Falconiformes*, Family *Falconidae*. Falcons are the more streamlined of the raptor species, with long pointed wings bent back at the wrists and large tails that taper at the tips. They consume many kinds of animals including insects, reptiles, small mammals, and birds. Falcons are found in a variety of habitats, from cities to the most remote areas. Strong fliers that achieve high speeds, falcons range in size from the American kestrel (27 cm bill tip to tail tip) to the peregrine falcon (41 to 51 cm).

Selected species

The American kestrel (*Falco sparverius*), or sparrow hawk, is the most common falcon in open and semi-open areas throughout North America. There are three recognized subspecies: *F. s. paulus* (year-round resident from South Carolina to Florida and southern Alabama), *F. s. peninsularis* (year-round resident of southern Baja California), and *F. s. sparverius* (widespread and migratory) (Bohall-Wood and Collopy, 1986). Predators of the kestrel include large raptors such as great horned owls, golden eagles, and red-tailed hawks (Meyer and Balgooyen, 1987).

Body size. Weighing slightly over one tenth of a kilogram, the kestrel is the smallest falcon native to the United States (Brown and Amadon, 1968). As for most raptors, females are 10 to 20 percent larger than males (Bloom, 1973; Craighead and Craighead, 1956). Kestrel body weights vary seasonally, with maximum weight (and fat deposits) being achieved in winter and minimum weights in summer (Bloom, 1973; Gessaman and Haggas, 1987).

Habitat. Kestrels inhabit open deserts, semi-open areas, the edges of groves (Brown and Amadon, 1968), and even cities (National Geographic Society, 1987). In several areas, investigators have found that male kestrels tend to use woodland openings and edges, while females tend to utilize more open areas characterized by short or sparse ground vegetation, particularly during the winter (Koplin, 1973, cited in Mills, 1976; Meyer and Balgooyen, 1987; Mills, 1975, 1976; Smallwood, 1987). In other areas, however, investigators have found no such differentiation (Toland, 1987; Sferra, 1984). In Florida, kestrels appear to prefer sandhill communities (particularly pine/oak woodlands); these areas provide high-quality foraging habitat and the majority of available nest sites (Bohall-Wood and Collopy, 1986). Kestrels are more likely to use habitats close to centers of human activities than are most other raptors (Fischer et al., 1984).

Food habits. Kestrels prey on a variety of small animals including invertebrates such as worms, spiders, scorpions, beetles, other large insects, amphibians and reptiles such as frogs, lizards, and snakes, and a wide variety of small- to medium-sized birds and mammals (Brown and Amadon, 1968; Mueller, 1987). Large insects, such as grasshoppers, are the kestrels' primary summer prey, although in their absence kestrels will switch to small mammals (Collopy, 1973) and birds (Brown and Amadon, 1968). In winter, small mammals and birds comprise most of the diet (Collopy and Koplin, 1983; Koplin et al., 1980). Kestrels usually cache their vertebrate prey, often in clumps of grass or in tree limbs and holes, to be retrieved later (Collopy, 1977; Mueller, 1987; Rudolph, 1982; Toland,

1984). Invertebrate prey usually are eaten immediately (Rudolph, 1982). In Florida, where small mammals are scarce and reptiles are abundant, lizards are an important component of the diet (Bohall-Wood and Collopy, 1987). Kestrels forage by three different techniques: using open perches from which to spot and attack ground prey, hovering in the air to spot ground prey, and catching insects on the wing (Rudolph, 1982, 1983).

Molt. Females begin their molt during incubation and complete it by the end of the breeding season. Males, who are responsible for capturing most of the prey for the family, do not begin their molt until near the end of the breeding season (Smallwood, 1988).

Migration. The American kestrel is a year-round resident over most of the United States, but is migratory over the northern-most portions of its range (National Geographic Society, 1987). Because of their late molt, males migrate and arrive at the wintering grounds later than females or immatures (Smallwood, 1988).

Breeding activities and social organization. Adult kestrels are solitary, except during the breeding season, and maintain territories even in winter (Brown and Amadon, 1968). Kestrels typically build their nests in tree cavities, but have used holes in telephone poles, buildings, or stream banks when tree cavities are not available (Brown and Amadon, 1968). Both parents participate in incubation, but the female performs most of the incubation, while the male provides her with food (Brown and Amadon, 1968). Following hatching, the male brings the majority of the prey to the nestlings (Brown and Amadon, 1968). After fledging, young kestrels remain dependent on their parents for food for at least 2 to 4 additional weeks (Lett and Bird, 1987). Fledglings often perch and socialize with their siblings prior to dispersal (Lett and Bird, 1987). In Florida, resident kestrels (*paulus* subspecies) maintain year-round pair bonds and joint territories. The resident pairs have a competitive advantage over winter migrants (*sparverius* subspecies) in their territories (Bohall-Wood and Collopy, 1986).

Home range and resources. Although some investigators have not noted territorial defense (e.g., Craighead and Craighead, 1956), Mills (1975) demonstrated that kestrels defend territories by introducing captured birds into other birds' territories. Winter foraging territories range from a few hectares in productive areas (e.g., in California) (Meyer and Balgooyen, 1987) to hundreds of hectares in less productive areas (e.g., Illinois, Michigan) (Craighead and Craighead, 1956; Mills, 1975). Summer breeding territories probably follow the same pattern (Craighead and Craighead, 1956).

Population density. Although much smaller than red-tailed hawks and bald eagles, reported kestrel breeding population densities can be similarly low (e.g., 0.0003 to 0.004 nests per hectare; see table).

Population dynamics. Kestrels are sexually mature in the first breeding season after their birth (Carpenter et al., 1987). Scarcity of suitable nesting cavities probably limits the size of kestrel populations in parts of the United States (Cade, 1982). Three to four young may fledge per nest per year, but mortality of juveniles in the first year is high (60 to 90 percent) (Craighead and Craighead, 1956; Henny, 1972). Adult mortality can be low (e.g., 12 percent per year) (Craighead and Craighead, 1956).

Similar species (from general references)

- The peregrine falcon (*Falco peregrinus*), a rare resident of woods, mountains, and coasts, preys almost exclusively on birds. Though uncommon, they can be found wintering in most states, but rarely breeding. These large falcons (38 cm) have been reintroduced in some areas in the United States and have nested in urban environments.

- The merlin (*Falco columbarius*), larger (30 cm) than the kestrel, can be found in a variety of habitats but nests in open woods or wooded prairies. Wintering along coasts and near cities of the Great Plains, it primarily eats birds.

- The prairie falcon (*Falco mexicanus*) also is larger (39 to 50 cm) than the kestrel and inhabits dry, open country and prairies. A year-round resident of the western United States, prairie falcons prey chiefly on birds and small mammals.

General references

Cade (1982); Craighead and Craighead (1956); National Geographic Society (1987); Brown and Amadon (1968).

American Kestrel (*Falco sparverius*)

Factors	Age/Sex/ Cond./Seas.	Mean	Range or (95% CI of mean)	Location	Reference	Note No.
Body Weight (g)	F fall	115 ± 8.6 SD		California, Imperial Valley	Bloom, 1973	
	F winter	132 ± 13 SD				
	M fall	103 ± 6.7 SD		California, Imperial Valley	Bloom, 1973	
	M winter	114 ± 7.8 SD				
	F laying/inc.	124		Utah	Gessaman & Haggas, 1987	
	F fall	127				
	F winter	138				
	M incubate	108		Utah	Gessaman & Haggas, 1987	
	M fall	111				
	M winter	119				
Metabolic Rate (kcal/kg-day)	F laying/inc.	414.4 ± 9.84 SE		Utah (free-living)	Gessaman & Haggas, 1987	1
	F fall	368.7 ± 17.0 SE				
	F winter	327.2 ± 5.72 SE				
	M incubate	337.6 ± 16.8 SE		Utah (free-living)	Gessaman & Haggas, 1987	1
	M fall	364.9 ± 26.9 SE				
	M winter	386.4 ± 9.41 SE				
	A F basal	134			estimated	2
	A M basal	140				
	A F free-living	333	(157 - 706)		estimated	3
	A M free-living	345	(162 - 733)			
Food Ingestion Rate (g/g-day)	A B winter	0.29		nw California (free-living)	Koplin et al., 1980	4
	(vert. prey)	(0.18)				
	(invert. prey)	(0.11)				
	A M summer	0.31		Ohio (seminatural enclosure)	Barrett & Mackey, 1975	
Water Ingestion Rate (g/g-day)	A F	0.11			estimated	5
	A M	0.12				

American Kestrel (*Falco sparverius*)

Factors	Age/Sex/ Cond./Seas.	Mean	Range or (95% CI of mean)	Location	Reference	Note No.
Inhalation Rate (m^3/day)	A F A M	0.089 0.079			estimated	6
Surface Area (cm^2)	A F A M	267 242			estimated	7

Dietary Composition	Spring	Summer	Fall	Winter	Location/Habitat (measure)		Note No.
invertebrates mammals birds reptiles other				32.6 31.7 30.3 1.9 3.5	California/open areas, woods (% wet weight of prey observed captured)	Meyer & Balgooyen, 1987	
vertebrates (primarily lizards) invertebrates	49 51				Florida/dry pine-oak woodlands (sandhill) (% wet weight of prey observed captured)	Bohall-Wood & Collopy, 1987	
Coleoptera other invertebrates frogs (*Rana aurora*) other herpetofauna *Microtus californicus* *Sorex vagrans* other mammals				10.8 14.2 8.0 12.2 30.2 9.4 11.5	California/hayfields, pasture (% wet weight of prey observed captured)	Collopy & Koplin, 1983	

American Kestrel (*Falco sparverius*)

Population Dynamics	Age/Sex Cond./Seas.	Mean	Range	Location/Habitat	Reference	Note No.
Territory Size (ha)	A F winter	31.6 ± 10.7 SD	18.7 - 42.0	California/open areas, woods	Meyer & Balgooyen, 1987	
	A M winter	13.1 ± 2.0 SD	9.7 - 14.8			
	A B winter	154	< 452	Illinois/agricultural area	Mills, 1975	
	A B summer	202 ± 131 SD	41 - 500	Wyoming/grasslands, forests	Craighead & Craighead, 1956	
	A B summer	131 ± 100 SD	21 - 215	Michigan/woodlots, fields	Craighead & Craighead, 1956	
Population Density	pairs summer	0.0026 nests/ha	0.0023 - 0.0031	Missouri/urban	Toland & Elder, 1987	
	pairs summer	0.0004 nests/ha	0.0003 - 0.0006	Missouri/rural	Toland & Elder, 1987	
	pairs summer	0.0035 pairs/ha		Wyoming/grasslands, forest	Craighead & Craighead, 1956	
	pairs summer	birds/ha:				
		0.0007 ± 0.00004 SD	0.0005 - 0.0012	s Michigan/fields, woodlots	Craighead & Craighead, 1956	
		0.0005 ± 0.0001 SD	0.0005 - 0.0006			
		0.0010 ± 0.0002 SD	0.0008 - 0.0011			
	B B fall					
	A B winter					
	A B spring					
Clutch Size		4.3		California/juniper, sagebrush	Bloom & Hawks, 1983	
		4 to 5	3 - 7	NS/NS	Brown & Amadon, 1968	
Clutches/Year		1		Quebec, Canada/captive	Carpenter et al., 1987	
Days Incubation		33.7 ± 0.33 SE	33 - 35	Maryland/captive	Porter & Wiemeyer, 1972	
		29 to 30		NS/NS	Brown & Amadon, 1968	
Age at Fledging		27.4 days	26 - 30 days	Maryland/captive	Porter & Wiemeyer, 1972	

American Kestrel (*Falco sparverius*)

Population Dynamics	Age/Sex Cond./Seas.	Mean	Range	Location/Habitat	Reference	Note No.
Number Fledge per Active Nest		3.1 3.8		California/juniper, sagebrush Wyoming/grasslands, forest	Bloom & Hawks, 1983 Craighead & Craighead, 1956	
Number Fledge per Successful Nest		3.7		California/juniper, sagebrush	Bloom & Hawks, 1983	
Age at Sexual Maturity	B	1 yr		Quebec, Canada/captive	Carpenter et al., 1987	
Annual Mortality (percent)	A B J B A B J B	12 88 46.0 ± 4.6 SE 60.7		s Michigan, Wyoming/ open areas, woods North America/NS	Craighead & Craighead, 1956 Henny, 1972	
Longevity			up to 9 yrs	Quebec, Canada/captive	Carpenter et al., 1987	
Seasonal Activity		Peak	End		Reference	Note No.
Mating/ Laying	early May mid-April early April mid-March	late May	late June early June mid-May early June	California central US northern Utah Florida	Bloom & Hawks, 1983 Brown & Amadon, 1968 Gessaman & Haggas, 1987 Brown & Amadon, 1968	
Hatching	early June early May	late June early May	late July mid-June	California northern Utah central Missouri	Bloom & Hawks, 1983 Gessamen & Haggas, 1987 Toland & Elder, 1987	
Molt	mid-May		mid-September	northern Utah	Gessaman & Haggas, 1987	

American Kestrel (*Falco sparverius*)

Seasonal Activity	Begin	Peak	End	Location	Reference	Note No.
	early September		early November	northern Utah	Gessaman & Haggas, 1987	
	early March			south Michigan	Craighead & Craighead, 1956	
	mid-April			Wyoming	Craighead & Craighead, 1956	

1 Investigators estimated values from time-activity budget studies of kestrels in the field and rates of energy expenditure during different activities measured in the laboratory.
2 Estimated using equation 3-28 (Lasiewski and Dawson, 1967) and body weights from winter measurements by Gessaman and Haggas (1987).
3 Estimated using equation 3-37 (Nagy, 1987) and body weights from winter measurements by Gessaman and Haggas (1987).
4 Authors observed prey captured daily, and estimated total wet-weight prey intake using measured or reported weights for identifiable prey and estimated weights for unidentifiable invertebrate prey (also, assumed kestrel weighed 119 g). Also, see Chapters 3 and 4 for methods by estimating food ingestion rates.
5 Estimated using equation 3-15 (Calder and Braun, 1983) and body weights from winter measurements by Gessaman and Haggas (1987).
6 Estimated using equation 3-19 (Lasiewski and Calder, 1971) and body weights from winter measurements by Gessaman and Haggas (1987).
7 Estimated using equation 3-21 (Meeh, 1879 and Rubner, 1883, cited in Walsberg and King, 1978) and body weights from winter measurements by Gessaman and Haggas (1987).

References (including Appendix)

Barrett, G. W.; Mackey, C. V. (1975) Prey selection and caloric ingestion rate of captive American kestrels. Wilson Bull. 87: 514-519.

Bird, D. M.; Clark, R. G. (1983) Growth of body components in parent- and hand-reared captive kestrels. Raptor Res. 17: 77-84.

Bloom, P. H. (1973) Seasonal variation in body weight of sparrow hawks in California. Western Bird Bander 48: 17-19.

Bloom, P. H.; Hawks, S. J. (1983) Nest box use and reproductive biology of the American kestrel in Lassen County, California. Raptor Res. 17: 9-14.

Bohall-Wood, P.; Collopy, M. W. (1986) Abundance and habitat selection of two American kestrel subspecies in north-central Florida. Auk 103: 557-563.

Bohall-Wood, P. G.; Collopy, M. W. (1987) Foraging behavior of southeastern American kestrels in relation to habitat use. Raptor Res. 6: 58-65.

Brown, L.; Amadon, D. (1968) Eagles, hawks, and falcons of the world. New York, NY: McGraw Hill Book Co.

Cade, T. J. (1982) The falcons of the world. Ithaca, NY: Cornell University Press.

Calder, W. A.; Braun, E. J. (1983) Scaling of osmotic regulation in mammals and birds. Am. J. Physiol. 244: R601-R606.

Carpenter, J. W.; Gabel, R. R.; Wiemeyer, S. N.; et al. (1987) Captive breeding. In: Pendleton, B. A.; Millsap, B. A.; Cline, K. W.; et al., eds. Raptor management techniques manual. Washington, DC: National Wildlife Federation; pp. 350-355.

Collopy, M. W. (1973) Predatory efficiency of American kestrels wintering in northwestern Califonia. Raptor Res. 7: 25-31.

Collopy, M. W. (1977) Food caching by female American kestrels in winter. Condor 79: 63-68.

Collopy, M. W.; Koplin, J. R. (1983) Diet, capture success, and mode of hunting by female American kestrels in winter. Condor 85: 369-371.

Craighead, J. J.; Craighead, F. C. (1956) Hawks, owls and wildlife. Harrisburg, PA: The Stackpole Co. and Washington, DC: Wildlife Management Institute.

Duke, G. E.; Evanson, O. A.; Jegers, A. A. (1976) Meal to pellet intervals in 14 species of captive raptors. Comp. Biochem. Physiol. 53A: 1-6.

Duke, G. E.; Mauro, L.; Bird, D. M. (1987) Physiology. In: Pendleton, B. A.; Millsap, B. A.; Cline, K. W.; et al., eds. Raptor management techniques manual. Washington, DC: Institute for Wildlife Research, National Wildlife Federation; Sci. Tech. Ser. No. 10; pp. 262-267.

Enderson, J. H. (1960) A population study of the sparrow hawk in east-central Illinois. Wilson Bull. 72: 222-231.

Fischer, D. L.; Ellis, K. L.; Meese, R. J. (1984) Winter habitat selection of diurnal raptors in central Utah. Raptor Res. 18: 98-102.

Gessaman, J. A. (1979) Premigratory fat in the American kestrel. Wilson Bull. 91: 625-262.

Gessaman, J. A.; Haggas, L. (1987) Energetics of the American kestrel in northern Utah. Raptor Res. 6: 137-144.

Henny, C. J. (1972) An analysis of the population dynamics of selected avian species with special reference to changes during the modern pesticide era. Washington, DC: Bur. Sport. Fish. Wildl.; Wildl. Res. Rep. 1.

King, J. R. (1974) Seasonal allocation of time and energy resources in birds. In: Paynter, R. A., Jr., ed. Avian energetics. Cambridge, MA: Nuttall Ornithol. Club; pp. 4-70.

Koplin, J. R. (1973) Differential habitat use by sexes of American kestrels wintering in northern California. Raptor Res. 7: 39-42.

Koplin, J. R.; Collopy, M. W.; Bammann, A. R.; et al. (1980) Energetics of two wintering raptors. Auk 97: 795-806.

Lasiewski, R. C.; Calder, W. A. (1971) A preliminary allometric analysis of respiratory variables in resting birds. Resp. Phys. 11: 152-166.

Lasiewski, R. C.; Dawson, W. R. (1967). A reexamination of the relation between standard metabolic rate and body weight in birds. Condor 69: 12-23.

Lett, D. W.; Bird, D. M. (1987) Postfledging behavior of American kestrels in southwestern Quebec. Wilson Bull. 99: 77-82.

Meeh, K. (1879) Oberflachenmessungen des mensclichen Korpers. Z. Biol. 15: 426-458.

Meyer, R. L.; Balgooyen, T. G. (1987) A study and implications of habitat separation by sex of wintering American kestrels (*Falco sparverius* L.). Raptor Res. 6: 107-123.

Mills, G. S. (1975) A winter population study of the American kestrel in central Ohio. Wilson Bull. 87: 241-247.

Mills, G. S. (1976) American kestrel sex ratios and habitat separation. Auk 93: 740-748.

Mueller, H. C. (1987) Prey selection by kestrels: a review. Raptor Res. 6: 83-106.

Nagy, K. A. (1987) Field metabolic rate and food requirement scaling in mammals and birds. Ecol. Monogr. 57: 111-128.

National Geographic Society. (1987) Field guide to the birds of North America. Washington, DC: National Geographic Society.

Porter, R. D.; Wiemeyer, S. N. (1972) Reproductive patterns in captive American kestrels (sparrow hawks). Condor 74: 46-53.

Rubner, M. (1883) Uber den Einfluss der Korpergrosse auf Stoff- und Kraftweschsel. Z. Biol. 19: 535-562.

Rudolph, S. G. (1982) Foraging strategies of American kestrels during breeding. Ecology 63: 1268-1276.

Rudolph, S. G. (1983) Aerial insect-catching by American kestrels. Condor 85: 368-369.

Sferra, N. J. (1984) Habitat selection by the American kestrel (*Falco sparverius*) and red-tailed hawk (*Buteo jamaicensis*) wintering in Madison County, Kentucky. Raptor Res. 18: 148-150.

Smallwood, J. A. (1987) Sexual segregation by habitat in American kestrels wintering in southcentral Florida: vegetative structure and responses to differential prey availability. Condor 89: 842-849.

Smallwood, J. A. (1988) A mechanism of sexual segregation by habitat by American kestrels (*Falco sparverius*) wintering in south-central Florida. Auk 105: 36-46.

Sparrowe, R. D. (1972) Prey-catching behavior in the sparrow hawk. J. Wildl. Manage. 36: 279-308.

Toland, B. R. (1984) Unusual predatory and caching behavior of American kestrels in central Missouri. Raptor Res. 18: 107-110.

Toland, B. R. (1987) The effect of vegetative cover on foraging strategies, hunting success and nesting distribution of American kestrels in central Missouri. Raptor Res. 21: 14-20.

Toland, B. R.; Elder, W. H. (1987) Influence of nest-box placement and density on abundance and productivity of American kestrels in central Missouri. Wilson Bull. 99: 712-717.

Walsberg, G. E.; King, J. R. (1978) The relationship of the external surface area of birds to skin surface area and body mass. J. Exp. Biol. 76: 185-189.

Wing, L.; Wing, A. H. (1939) Food consumption of a sparrow hawk. Condor 41: 168-170.

Zar, J. H. (1968) Standard metabolism comparisons between orders of birds. Condor 70: 278.

Zar, J. H. (1969) The use of the allometric model for avian standard metabolism - body weight relationships. Comp. Biochem. Physiol. 29: 227-234.

2.1.9. Northern Bobwhite (quail)

Order *Galliformes*, Family *Phasiadinae*. Quail are ground-dwelling birds with short, heavy bills adapted for foraging on the ground for seeds and insects. Most species inhabit brush, abandoned fields, and open woodlands; some inhabit parklands. Quail and most other gallinaceous birds are poor flyers that seldom leave the ground and do not migrate. All species of this family gather in coveys (i.e., flocks of varying size) during some part of the year. Quail range in size from Montezuma's quail (22 cm bill tip to tail tip) to the mountain and Gambel's quail (28 cm); sexes are similar in size but differ in appearance.

Selected species

The northern bobwhite (*Colinus virginianus*) feeds mainly on seeds by gleaning on the ground and low vegetation. It ranges from southeastern Wyoming, east to southern Minnesota and across to southern Maine, south through the central and eastern United States to eastern New Mexico in the west and to Florida in the east (American Ornithologists' Union, 1983). It is the most widespread of the North American quail and used to be very common, particularly east of the Rocky Mountains. Over the past three decades, however, populations have been declining throughout its range (Brennan, 1991).

Body size. Northern bobwhite are average-sized quail (25 cm). Wild bobwhites typically weigh between 150 and 200 g depending on location and season (see table), while commercially bred stock usually exceed 200 g and may reach 300 g or more (Brenner and Reeder, 1985; Koerth and Guthery, 1991). Males and females are similar in size, and weights tend to increase with latitude and toward the west coast of the United States (Hamilton, 1957; Rosene, 1969; Roseberry and Klimstra, 1971). Females are heaviest in the spring and summer when they are laying eggs; males are lightest at this time of year (Hamilton, 1957; Roseberry and Klimstra, 1971). Juveniles tend to weigh slightly less than adults through winter (Hamilton, 1957; Roseberry and Klimstra, 1971). Koerth and Guthery (1987) found both males and females to maintain between 9 and 11 percent body fat (as a percentage of dry body weight) throughout the year in southern Texas; more northern populations may maintain higher body fat ratios, particularly just prior to breeding (McRae and Dimmick, 1982).

Habitat. During the breeding season, grasslands, idle fields, and pastures are the preferred nesting habitat, and bobwhite often nest in large clumps of grasses (Roseberry and Klimstra, 1984). Shade, open herbaceous cover, and green and growing vegetation are required for suitable nest sites (Lehmann, 1984). Bobwhites forage in areas with open vegetation, some bare ground, and light litter (Stoddard, 1931). Nearby dry powdery soils are important for dust bathing (Johnsgard, 1988). Shrubby thickets up to 2 m high are used for cover during midday (Schroeder, 1985). Although their range is extensive, northern bobwhite reproduce poorly in the arid western portions of their range and during droughts elsewhere (Schroeder, 1985). During the winter, they require wooded cover with understory for daytime cover, preferably adjacent to open fields for foraging (Yoho and Dimmick, 1972). They tend to roost at night in more open habitats with short and sparse vegetation (Schroeder, 1985). In the more northern latitudes, cover and food can be limited during the winter (Rosene, 1969). Changes in land use, primarily

the distribution of farms and farming methods, have eliminated large areas of bobwhite habitat in the last three decades (Brennan, 1991).

Food habits. Bobwhites forage during the day, primarily on the ground or in a light litter layer less than 5 cm deep (Rosene, 1969). Seeds from weeds, woody plants, and grasses comprise the majority of the adult bobwhite's diet throughout the year (Handley, 1931; Bent, 1932; Lehmann, 1984), although in winter in the south, green vegetation has been found to dominate the plant materials in their diet (Campbell-Kissock et al., 1985). Insects and other invertebrates can comprise up to 10 to 25 percent of the adults' diet during the spring and summer in more northerly areas and year-round in the south (Campbell-Kissock et al., 1985; Handley, 1931; Lehmann, 1984). Insects comprise the bulk of the chicks' diet; up to 2 or 3 weeks of age chicks may consume almost 85 percent insects, the remainder of the diet consisting of berries and seeds (Handley, 1931). Most insects consumed by bobwhite chicks are very small, less than 8 mm in length and 0.005 g (Hurst, 1972). Juvenile bobwhite, on the other hand, may consume only 25 percent insects, the remainder of their diet being fruit and seeds (Handley, 1931). Quail consume little grit. Korschgen (1948) found grit in only 3.4 percent of over 5,000 crops examined, and agreed with Nestler (1946) that hard seeds can replace grit as the grinding agent for northern bobwhite.

In some areas, bobwhites apparently can acquire their daily water needs from dew, succulent plants, and insects (Stoddard, 1931); in more arid areas or in times of drought, however, northern bobwhite need surface water for drinking (Johnsgard, 1988; Lehmann, 1984; Prasad and Guthery, 1986). Females need more water than males during the breeding season, and both sexes may require more water in the winter than in the summer when their diet is more restricted to seeds with low water content (Koerth and Guthery, 1990). Measurements on captive quail have indicated a daily water requirement of up to 13 percent of their body mass (see table); however, water intake requirements for free-ranging birds may be higher, perhaps 14 to 21 percent of body mass per day (Koerth and Guthery, 1990). In the absence of adequate water, females may fail to reproduce (Koerth and Guthery, 1991).

Dustbathing. Quail frequently dustbathe, although the reason for the behavior is debated.[c] They scratch in dry dirt or dust, toss the dust up into their feathers, rub their head and sides in the dust, and then shake the dust from their plumage (Borchelt and Duncan, 1974). Experiments by Driver et al. (1991) indicate that ingestion of materials preened from feathers and direct dermal uptake can be significant exposure pathways for quail exposed to aerial application of pesticides. Dust bathing might, therefore, provide a significant exposure route for bobwhites using contaminated soils.

Molt. Juveniles attain adult plumage during their first fall molt at about 3 to 5 months of age (Hamilton, 1957; Stoddard, 1931). Adults undergo a complete prebasic

---

[c]Stoddard (1931) and others have suggested that dust bathing helps to control ectoparasites; Borchelt and Duncan (1974) suggest that dust bathing helps control the amount of oil on the quails' feathers.

molt in the late summer and fall into winter plumage; in spring, a limited renewal of feathers around the head and throat provides the breeding plumage (Bent, 1932).

Migration. The northern bobwhite is a year-round resident over its entire range but may disperse locally to a different cover type or altitude with the changing season (Lehmann, 1984). Most winter in wooded or brushy areas, returning to more open habitats in spring for the breeding season (Lehmann, 1984; Rosene, 1969). Populations nesting at higher elevations tend to move to lower ground where the winters are less severe (Stoddard, 1931). The more southerly populations may be more sedentary; in a study in Florida, northern bobwhite were found no further than 1 km from where they were banded, and 86 percent were found within 400 m from their banding site over a 1- to 5-year period (Smith et al., 1982).

Breeding activities and social organization. Northern bobwhite build nests on the ground in open woodlands or in or around fields used for foraging. Most nests are constructed in grassy growth near open ground, often in areas with scattered shrubs and herbaceous growth (Klimstra and Roseberry, 1975; Stoddard, 1931). Both the male and female scrape out a saucer-shaped depression in the ground 2 to 6 cm deep and 10 to 12 cm across, lining it with dead grasses from the previous year's growth (Bent, 1932; Rosene, 1969). They lay large clutches, 12 to 30 eggs, which one or both parents incubate for approximately 23 days (Lehmann, 1984; Simpson, 1976). As a general rule, clutch size and nest success both decrease as the season progresses (Roseberry and Klimstra, 1984). Family units, consisting of both the male and female as well as the offspring, sometimes remain intact through the summer, but more often, one or both parents are lost to predation (some females leave their brood to the male and begin another), and other pairs or individual adults may adopt chicks from other broods (Lehmann, 1984). By fall, northern bobwhites of all ages gather in larger coveys for the fall and winter. The quail remain in coveys until the next spring, when they disperse as mating season begins (Lehmann, 1984; Roseberry and Klimstra, 1984). Coveys of northern bobwhite tend to average 10 to 12 or 15 birds (up to 30) (Johnsgard, 1988; Lehmann, 1984; Rosene, 1969). When roosting in winter, the birds in a covey form a small circle on the ground under a tree or in thick brush, with heads facing outward and their bodies closely packed to conserve heat.

Home range and resources. In the breeding season, the bobwhite's home range includes foraging areas, cover, and the nest site and may encompass several hectares. Mated males and incubating females have the smallest spring and summer home ranges; bachelor males and post-nesting males and females have much larger foraging ranges (see table). Bobwhite tend to use a portion of their home range more intensively than the remainder of the range (Urban, 1972). In the fall and winter, the range of each bobwhite covey must include adequate open foraging areas and cover, typically shrubby or woody thickets (Rosene, 1969). Each covey may utilize an area of several hectares, although as in summer, there tend to be activity centers where the quail spend most of their time (Yoho and Dimmick, 1972).

Population density. Bobwhite density depends on food and cover availability and varies from year to year as well as from one location to another (Roseberry and Klimstra, 1984). Densities are highest at the end of the breeding season in the fall. In the

southeast, densities may reach values as high as 7.5 birds (adults and juveniles) per hectare, although average values of 2 to 3 may be more common in these areas (Guthery, 1988; Lehmann, 1984; Smith et al., 1982). Winter and spring densities between 0.1 and 0.8 birds per hectare have been recorded in the spring further north (Roseberry et al., 1979).

Population dynamics. Bobwhites attempt to rear one or two broods per year (up to three in the south) (Bent, 1932; CKWRI, 1991; Stanford, 1972b). Bobwhite clutch sizes are generally smaller in more southerly populations (Roseberry and Klimstra, 1984) and smaller as the breeding season progresses in any given locale (Lehmann, 1984; Simpson, 1976). Predation is a major cause of nest loss; once hatched, chicks leave the nest immediately to follow both or one parent (Lehmann, 1984; Roseberry and Klimstra, 1984). Juveniles can survive without parental care after about 6 weeks of age (Lehmann, 1984). They reach maturity by 16 weeks of age in the laboratory although they continue to gain weight through about 20 weeks (Moore and Cain, 1975), and they may require 8 to 9 months to mature in the wild (Johnsgard, 1988; Jones and Hughes, 1978). Adult mortality as well as juvenile mortality is high, with 70 to 85 percent of birds surviving less than 1 year (Brownie et al., 1985; Lehmann, 1984); thus, the bulk of the population turns over each year.

Similar species (from general references)

- California quail (*Callipepla californica*), also known as valley quail, are similar in size (25 cm) to the bobwhite and also gather in coveys during autumn and winter. They are common in open woodlands, brushy foothills, stream valleys, and suburbs, usually near permanent surface waters; however, their range is restricted largely to the western coastal States and Baja California.

- Gambel's quail (*Callipepla gambelii*) is larger (28 cm) than the bobwhite, and is a resident of the southwestern desert scrublands, usually near permanent surface waters. It also gathers in coveys in winter.

- The scaled quail (*Callipepla squamata*), similar in size (25 cm) to the bobwhite, is restricted to the mesas, plateaus, semidesert scrublands, and grasslands mixed with scrub, primarily of western Texas, New Mexico, and Mexico.

- Mountain quail (*Oreortyx pictus*) are found in the chapparal, brushy ravines, and mountain slopes of the west up to 3,000 m. These also are large quail (28 cm). During the fall, they gather in coveys and descend to lower altitudes for the winter.

- The Montezuma quail (*Cyrtonyx montezumae*), formerly known as the harlequin quail, is a small (22 cm), secretive resident of the southwest. This species is usually found in grassy undergrowth of juniper or oak-pine woodlands.

General references

Johnsgard (1988); Lehmann (1984); National Geographic Society (1987); Rosene (1969); Roseberry and Klimstra (1984); Stoddard (1931).

Northern Bobwhite (*Colinus virginianus*)

Factors	Age/Sex/ Cond./Seas.	Mean	Range or (95% CI of mean)	Location or subspecies	Reference	Note No.
Body Weight (g)	A B fall	189.9 ± 3.28 SE		Kansas	Robel, 1969	
	A B winter	193.9 ± 4.56 SE				
	A B spring	190.0 ± 4.98 SE				
	A M winter	181		Illinois	Roseberry & Klimstra, 1971	
	A M summer	163				
	A F winter	183				
	A F summer	180				
	A M winter	161		west Rio Grande, Texas	Guthery et al., 1988	
	A M summer	154				
	A F winter	157				
	A F summer	157				
			(weight gain:)			
	at hatching	6.3		southwest Georgia/both captive and wild birds living in farms, woods, and thickets	Stoddard, 1931	
	day 6	9 - 10	(0.5 - 0.75 g/day)			
	day 10	10 - 13				
	day 19	20 - 25	(1.5 g/day)			
	day 32	35 - 45				
	day 43	55 - 65	(1.75 g/day)			
	day 55	75 - 85				
	day 71	110 - 120	(1.75 - 2.0 g/day)			
	day 88	125 - 150				
	day 106	140 - 160				
	J B fall	174.0 ± 3.49 SE		Kansas	Robel, 1969	
Body Fat (% dry weight)	A M winter	15.5 ± 2.8 SD		Tennessee	McRae & Dimmick, 1982	
	A M spring	8.8 ± 3.2 SD				
	A F winter	13.8 ± 2.7 SD				
	A F spring	12.7 ± 2.4 SD				
Body Fat (% dry weight) (continued)	A M winter	10.2 ± 0.6 SE	9.0 - 11.9	southern Texas/captive	Koerth & Guthery, 1987	
	A M spring	7.9 ± 0.2 SE	6.5 - 10.0			
	A F winter	10.6 ± 0.8 SE	8.3 - 19.9			
	A F spring	9.7 ± 0.3 SE	7.7 - 11.2			

Northern Bobwhite (*Colinus virginianus*)

Factors	Age/Sex/ Cond./Seas.	Mean	Range or (95% CI of mean)	Location or subspecies	Reference	Note No.
Egg Weight (grams)		9.3 ± 0.3 SE		Texas	Koerth & Guthery, 1991	
		8.6	8.0 - 10.2	southwest Georgia	Stoddard, 1931	
Metabolic Rate (kcal/kg-day)	A F nonbreed	183.3		Nebraska/captive	Case, 1982	1
	A F laying	243.9				
	A M basal	129			estimated	2
	A F basal	125				
	A M free-living	320	(151 - 677)		estimated	3
	A F free-living	311	(147 - 659)			
Food Ingestion Rate (g/g-day)	A B winter	0.093 ± 0.0032 SE		southern Texas/captive	Koerth & Guthery, 1990	4
	A B spring	0.067 ± 0.0021 SE				
	A B summer	0.079 ± 0.0061 SE				
	A B fall	0.072 ± 0.0017 SE				
(kcal/kg-day)	A B winter	587		Kansas	Robel, 1969	5
	A B fall	657				
	A B spring	519				
Water Ingestion Rate (g/g-day)	A M summer	0.10 ± 0.023 SD		southern Texas/captive	Koerth & Guthery, 1990	
	A F summer	0.13 ± 0.037 SD				
	A M summer	0.11			estimated	6
	A F summer	0.10				
Inhalation Rate (m^3/day)	A M summer	0.10			estimated	7
	A F summer	0.11				
Surface Area (cm^2)	A M summer	298			estimated	8
	A F summer	320				

Northern Bobwhite (*Colinus virginianus*)

Dietary Composition	Spring	Summer	Fall	Winter	Location/Habitat (measure)	Reference	Note No.
adults:							
(total plant foods)	(87.2)	(78.7)	(79.7)	(96.8)	southeastern United States/NS	Handley, 1931	
misc. seeds	21.1	6.0	11.1	2.6			
other seeds:							
legumes	15.2	3.9	10.1	31.5	(% volume; crop and gizzard contents)		
senna	7.2	0.4	0.2	12.8			
cultivated plants	2.1	2.1	5.3	2.6			
grasses	3.1	11.3	26.0	2.3			
sedges	1.1	1.2	2.4	1.1			
mast	14.1	0.2	0.5	28.0			
spurges	0.1	1.2	5.5	0.4			
fruits	11.1	45.8	11.3	9.5			
forage plants	12	0.3	0.3	5.2			
(total animal foods)	(12.8)	(19.6)	(20.3)	(3.2)			
grasshoppers	3.2	7.5	16.6	2.4			
bugs	2.8	4.4	0.6	0.1			
beetles	4.6	6.3	0.8	0.2			
adults:							
seeds of weeds	43.64	33.7	30.0	34.3	south Texas/semi-prairie, brushland	Lehmann, 1984	
seeds of woody plants	4.03	20.5	39.7	9.5			
seeds of grasses	13.2	24.8	0.7	7.2			
cultivated grains, etc.	3.7	1.9	8.3	15.4	(% dry volume; crop contents)		
greens	27.4	4.9	3.4	10.3			
insects	8.03	14.2	17.9	23.3			
adults:							
seeds of forbs		3.5	19.0	12.0	southwest Texas/grasslands drought conditions	Campbell-Kissock et al., 1985	
seeds of grasses		51.7	42.9	4.9			
seeds/fruits of woody plants		9.7	-	1.4			
unidentified seeds		4.6	-	2.3	(% wet volume; crop contents)		
green vegetation		4.8	1.8	72.4			
invertebrates		25.8	36.2	6.5			

Northern Bobwhite (*Colinus virginianus*)

Population Dynamics	Age/Sex/ Cond./Seas.	Mean	Range or (95% CI of mean)	Location/Habitat	Reference	Note No.
Home Range Size (ha/bird)	summer:					
	A B	3.6		Iowa/State game area	Crim & Seitz, 1972	
	A M mated	7.6 ± 5.0 SD		south Illinois/idle farms	Urban, 1972	
	A M unmated	16.7 ± 9.5 SD		woods, brush, cornfields		
	A F nesting	6.4 ± 4.0 SD				
	A F post-nest	15.6 ± 9.1 SD				
(ha/covey)	winter:					
	B B	6.8 ± 2.9 SD	4.0 - 11.7	Tennessee/woods, old fields cultivated fields	Yoho & Dimmick, 1972	
	B B	15.4	12.1 - 18.6	south Illinois/NS	Bartholomew, 1967	
Population Density (N/ha)	B B fall	0.21 ± 0.0031 SE		south Texas/upland rangeland	Guthery, 1988	
	B B spring	0.10 ± 0.0003 SE				
	B B fall	0.63 ± 0.24 SD	0.28 - 0.92	south Illinois/agricultural	Roseberry et al., 1979	
	B B spring	0.24 ± 0.05 SD	0.18 - 0.33			
	B B fall	5.0 ± 0.30 SE		south Texas/mixed brush rangeland	Guthery, 1988	
	B B spring	2.2 ± 0.21 SE				
	B B winter	0.63 ± 0.18 SD	0.37 - 0.88	South Carolina/farms, woods	Rosene, 1969	
	B B winter	2.25 ± 1.16 SD	0.6 - 3.9		Smith et al., 1982	
	B B winter	3.65 ± 2.22 SD	1.7 - 7.6	Florida/pine woods		
Clutch Size		12.9	4 - 33	south Texas/prairie, brush	Lehmann, 1984	
		13.7 ± 3.28 SD	6 - 28	Illinois/agricultural	Roseberry & Klimstra, 1984	
	March	25.0		southwest Georgia/pine woods, farms	Simpson, 1976	
	August	9.4				
Clutches/Year		1	0 - 3	NS/NS	CKWRI, 1991	
Days Incubation		23	21 - 25	south Texas/prairie, brush	Lehmann, 1984	

Northern Bobwhite (*Colinus virginianus*)

Population Dynamics	Age/Sex/ Cond./Seas.	Mean	Range or (95% CI of mean)	Location/Habitat	Reference	Note No.
Percent Nests Successful		17.5	15.4 - 19.0	southwest Georgia/pine woods, farms	Simpson, 1976	
		32.6 ± 8.1 SD	21.0 - 52.8	south Illinois/agricultural	Roseberry & Klimstra, 1984	
Number Hatch per Successful Nest	spring/ summer	12.2		south Texas/semiprairie, brush	Lehmann, 1984	
	March	20.0		southwest Georgia/pine woods, farms	Simpson, 1976	
	August	8.4				
Age at Sexual Maturity	B	8 - 9 months		NS/NS (wild)	Johnsgard, 1988	
	B	16 weeks		South Carolina/lab	Jones & Hughes, 1978	
Annual Mortality Rates (percent)	A M	78.8 ± 2.47 SE	64.7 - 94.8	Florida/open woods	Brownie et al., 1985	
	A F	85.3 ± 2.72 SE	68.4 - 98.6			
	J M	81.8 ± 2.46 SE	73.0 - 93.7			
	J F	87.2 ± 1.68 SE	67.9 - 95.8			
	B B	81		Illinois/agricultural	Roseberry & Klimstra, 1984	
	no hunting					
	B M	52		Florida/pine woods	Pollock et al., 1989	
	B F	56				
Longevity (months)	starting:					9
	B November	10.6		Texas/semiprairie, brush	Lehmann, 1984	
	B October	8.5		central Missouri/NS	Marsden & Baskett, 1958	
Seasonal Activity			End			Note No.
Mating/ Laying	March	May - June	August	Florida	Bent, 1932	
	mid-April		mid-August	south Texas	Lehmann, 1984	
	April	mid-May - July	September	south Illinois	Roseberry & Klimstra, 1984	
Hatching	mid-March	May - June	mid-September	south Texas	Lehmann, 1984	
	late April	May - August	October	sw Georgia, northern Florida	Stoddard, 1931	
	early May	mid-June	October	Missouri	Stanford, 1972a	
	mid-May	June - August	early October	south Illinois	Roseberry & Klimstra, 1984	

Northern Bobwhite (*Colinus virginianus*)

Seasonal Activity	Begin	Peak	End	Location	Reference	Note No.
Molt fall	August	September	October	NS	Bent, 1932	
spring	early February	March - April	early June	sw Georgia, northern Florida	Stoddard, 1931	

1 Metabolized energy requirements of farm-raised birds in captivity: (1) 7 weeks prior to laying (mean weight of hens = 194 g) and (2) during laying (mean weight of hens = 215 g).
2 Estimated using equation 3-28 (Lasiewski and Dawson, 1967) and summer body weights from Roseberry and Klimstra (1971).
3 Estimated using equation 3-37 (Nagy, 1987) and summer body weights from Roseberry and Klimstra (1971).
4 Diet of commercial game food with only 5 to 10 percent water content; maintained at temperature, humidity, and light cycle typical for Texas.
5 Gross energy intake calculated from the average volume of crop contents in shot birds, assuming a 1.5-hour retention period, 2.30 kcal/cm^3 for the contents, and constant foraging throughout the daylight hours, which is likely to overestimate food intake.
6 Estimated using equation 3-15 (Calder and Braun, 1983) and body weights from Roseberry and Klimstra (1971).
7 Estimated using equation 3-19 (Lasiewski and Calder, 1971) and body weights from Roseberry and Klimstra (1971).
8 Estimated using equation 3-21 (Meeh, 1879 and Rubner, 1883, as cited in Walsberg and King, 1978) and body weights from Roseberry and Klimstra (1971).
9 Expected remaining longevity for those juvenile quail that survived to the month indicated.

References (including Appendix)

American Ornithologists' Union. (1983) Check-list of North American birds. Lawrence, KS: Allen Press, Inc.

Andrews, T. L.; Harms, R. H.; Wilson, H. R. (1973) Protein requirement of the bobwhite chick. Poult. Sci. 52: 2199-2201.

Baldwin, W. P., Jr.; Handley, C. O. (1946) Winter food of the bobwhite quail in Virginia. J. Wildl. Manage. 10: 142-149.

Bartholomew, R. M. (1967) A study of the winter activity of the bobwhite through the use of radiotelemetry. Kalamazoo, MI: Occas. Pap. Adams Ecol. Center, Western Mich. Univ.; 25 pp.

Bent, A. C. (1932) Life histories of North American gallinaceous birds. Washington, DC: U.S. Government Printing Office; Smithsonian Inst. U.S. Nat. Mus., Bull. 162.

Blem, C. R.; Zara, J. (1980) The energetics of young bobwhite (*Colinus virginianus*). Comp. Biochem. Physiol. A: Comp. Physiol. 67: 611-615.

Borchelt, P. L.; Duncan, L. (1974) Dustbathing and feather lipid in bobwhite (*Colinus virginianus*). Condor 76: 471-472.

Brennan, L. A. (1991) How can we reverse the northern bobwhite decline? Wildl. Soc. Bull. 19: 544-555.

Brenner, F. J.; Reeder, M. (1985) Effect of temperature on energy intake in three strains of bobwhite quail (*Colinus virginianus*). Proc. Penn. Acad. Sci. 59: 119-120.

Brownie, C.; Anderson, D. R.; Burnham, K. P.; et al. (1985) Statistical inference from band recovery data - a handbook. Washington, DC: U.S. Fish Wildl. Serv., Resour. Publ. 156.

Buss, I. O.; Mattison, H.; Kozlik, F. M. (1947) The bobwhite quail in Dunn County, Wisconsin. Wisc. Cons. Bull. 12: 6-13.

Caesar Kleberg Wildlife Research Institute (CKWRI). (1991) Double broods revisited. In: Quail news from CKWRI No. 14, March 1991. Kingsville, TX: Texas A&I University; p. 6.

Calder, W. A.; Braun, E. J. (1983) Scaling of osmotic regulation in mammals and birds. Am. J. Physiol. 244: R601-R606.

Campbell-Kissock, L.; Blankenship, L. H.; Stewart, J. W. (1985) Plant and animal foods of bobwhite and scaled quail in southwest Texas. Southwest. Nat. 30: 543-553.

Case, R. M. (1973) Bioenergetics of a covey of bobwhites. Wilson Bull. 85: 52-59.

Case, R. M. (1982) Adaptations of female bobwhites to energy demands of the reproductive cycle. Proc. Natl. Bobwhite Quail Symp. 2: 74-78.

Case, R. M.; Robel, R. J. (1974) Bioenergetics of the bobwhite. J. Wildl. Manage. 38: 638-652.

Craighead, J. J.; Craighead, F. C. (1956) Hawks, owls and wildlife. Harrisburg, PA: The Stackpole Co. and Washington, DC: Wildlife Management Institute.

Crim, L. A.; Seitz, W. K. (1972) Summer range and habitat preferences of bobwhite quail on a southern Iowa State Game Area. Proc. Iowa Acad. Sci. 79: 85-89.

Driver, C. J.; Ligotke, M. W.; Van Voris, P.; et al. (1991) Routes of uptake and their relative contribution to the toxicologic response of northern bobwhite (*Colinus virginianus*) to an organophosphate pesticide. Environ. Toxicol. Chem. 10: 21-33.

Guthery, F. S. (1988) Line transect sampling of bobwhite density on rangeland: evaluation and recommendations. Wildl. Soc. Bull. 16: 193-203.

Guthery, F. S.; Koerth, N. E.; Smith, D. S. (1988) Reproduction of northern bobwhites in semiarid environments. J. Wildl. Manage. 52: 144-149.

Hamilton, M. (1957) Weights of wild bobwhites in central Missouri. Bird Banding 28: 222-228.

Handley, C. O. (1931) The food and feeding habits of bobwhites. In: Stoddard, H. L., ed. The bobwhite quail: its habits, preservation and increase. New York, NY: Charles Scribner's Sons.

Heitmeyer, M. E. (1980) Foods of bobwhites in northeastern Missouri related to land use. Trans. Missouri Acad. Sci. 14: 51-60.

Hurst, G. A. (1972) Insects and bobwhite quail brood habitat management. Proc. Natl. Bobwhite Quail Symp. 1: 65-82.

Johnsgard, P. A. (1988) The quails, partridges, and francolins of the world. Oxford, England: Oxford University Press; pp. 60-68.

Jones, J. E.; Hughes, B. L. (1978) Comparison of growth rate, body weight, and feed conversion between *Cortunix* D_1 quail and bobwhite quail. Poult. Sci. 57: 1471-1472.

Judd, S. (1905) The bob-white and other quails of the United States and their economic relations. U.S. Biol. Survey Bull. 21: 1-66.

Kellogg, F. E.; Doster, G. L.; Williamson, L. L. (1970) A bobwhite density greater than one bird per acre. J. Wildl. Manage. 34: 464-466.

Klimstra, W. D.; Roseberry, J. L. (1975) Nesting ecology of the bobwhite in southern Illinois. Wildl. Monogr. 41; 37 pp.

Koerth, N. E.; Guthery, F. S. (1987) Body fat levels of northern bobwhites in south Texas. J. Wildl. Manage. 51: 194-197.

Koerth, N. E.; Guthery, F. S. (1990) Water requirements of captive northern bobwhites under subtropical seasons. J. Wildl. Manage. 54: 667-672.

Koerth, N. E.; Guthery, F. S. (1991) Water restriction effects on northern bobwhite reproduction. J. Wildl. Manage. 55: 132-137.

Korschgen, L. J. (1948) Late-fall and early-winter food habits of bobwhite quail in Missouri. J. Wildl. Manage. 12: 46-57.

Lasiewski, R. C.; Calder, W. A. (1971) A preliminary allometric analysis of respiratory variables in resting birds. Resp. Phys. 11: 152-166.

Lasiewski, R. C.; Dawson, W. R. (1967) A reexamination of the relation between standard metabolic rate and body weight in birds. Condor 69: 12-23.

Lay, D. W. (1954) Quail management for east Texas. Texas Parks Wildl. Dept. Bull. No. 34.

Lehmann, V. W. (1984) Bobwhites in the Rio Grande plain of Texas. College Station, TX: Texas A&M University Press.

Marsden, H. M., Baskett, T. S. (1958) Annual mortality in a banded bobwhite population. J. Wildl. Manage. 22: 414-419.

Martin, A. C.; Zim, H. S.; Nelson, A. L. (1951) American wildlife and plants. New York, NY: McGraw-Hill Book Company, Inc.

McRae, W. A.; Dimmick, R. W. (1982) Body fat and blood-serum values of breeding wild bobwhites. J. Wildl. Manage. 46: 268-271.

Meeh, K. (1879) Oberflachenmessungen des mensclichen Korpers. Z. Biol. 15: 426-458.

Moore, P. E.; Cain, J. R. (1975) Characterization of bobwhite quail reared for hunting. Poult. Sci. 54: 1798.

Nagy, K. A. (1987) Field metabolic rate and food requirement scaling in mammals and birds. Ecol. Monogr. 57: 111-128.

National Geographic Society. (1987) Field guide to the birds of North America. Washington, DC: National Geographic Society.

Nelson, A. L.; Martin, A. C. (1953) Gamebird weights. J. Wildl. Manage. 17: 36-42.

Nestler, R. B. (1946) Mechanical value of grit for bobwhite quail. J. Wildl. Manage. 10: 137-142.

Nice, M. (1910) Food of the bobwhite. J. Economic Entomology 3: 6-10.

Pollock, K. H.; Moore, C. T.; Davidson, W. R.; et al. (1989) Survival rates of bobwhite quail based on band recovery analyses. J. Wildl. Manage. 53: 1-6.

Prasad, N. L.; Guthery, F. S. (1986) Drinking by northern bobwhites in Texas. Wilson Bull. 98: 485-486.

Reid, V. H.; Goodrum, P. D. (1960) Bobwhite quail: a product of longleaf pine forests. Trans. North Am. Wildl. Conf. 25: 241-252.

Robel, R. J. (1969) Food habits, weight dynamics and fat content of bobwhites in relation to food plantings in Kansas. J. Wildl. Manage. 38: 653-664.

Robel, R. J.; Bisset, A. R.; Dayton, A. D.; et al. (1979a) Comparative energetics of bobwhites on six different foods. J. Wildl. Manage. 43: 987-992.

Robel, R. J.; Bisset, A. R.; Clement, T. M., Jr.; et al. (1979b) Metabolizable energy of important foods of bobwhites in Kansas. J. Wild. Manage. 43: 982-987.

Robel, R. J.; Case, R. M.; Bisset, A. R.; et al. (1974) Energetics of food plots in bobwhite management. J. Wildl. Manage. 38: 653-664.

Roseberry, J. L.; Klimstra, W. D. (1971) Annual weight cycles in male and female bobwhite quail. Auk 88: 116-123.

Roseberry, J. L.; Klimstra, W. D. (1984) Population ecology of the bobwhite. Carbondale and Edwardsville, IL: Southern Illinois University Press.

Roseberry, J. L.; Peterjohn, B. G.; Klimstra, W. D. (1979) Dynamics of an unexploited bobwhite population in deteriorating habitat. J. Wildl. Manage. 43: 306-315.

Rosene, W. (1969) The bobwhite quail, its life and management. New Brunswick, NJ: Rutgers Press.

Rubner, M. (1883) Uber den Einfluss der Korpergrosse auf Stoff- und Kraftweschsel. Z. Biol. 19: 535-562.

Schroeder, R. L. (1985) Habitat suitability models index: northern bobwhite. U.S. Fish Wildl. Serv. Biol. Rep. 82(10.104).

Sermons, W. O.; Speake, D. W. (1987) Production of second broods by northern bobwhites. Wilson Bull. 99: 285-286.

Simpson, R. C. (1976) Certain aspects of the bobwhite quails life history in southwest Georgia. Atlanta, GA: Georgia Dept. Nat. Resour.; Tech. Bull. WL1.

Smith, G. F.; Kellogg, F. I.; Doster, G. L.; et al. (1982) A 10-year study of bobwhite quail movement patterns. Proc. Natl. Bobwhite Quail Symp. 2: 35-44.

Stanford, J. A. (1972a) Bobwhite quail population dynamics: relationships of weather, nesting, production patterns, fall population characteristics, and harvest in Missouri quail. Proc. Natl. Bobwhite Quail Symp. 1: 115-139.

Stanford, J. A. (1972b) Second broods in bobwhite quail. Proc. Natl. Bobwhite Quail Symp. 1: 21-27.

Stempel, M. E. (1960) Quail hatching and primary feather moult in adults. Proc. Iowa Acad. Sci. 67: 616-621.

Stoddard, H. L. (1931) The bobwhite quail: its habits, preservation and increase. New York, NY: Charles Scribner's Sons.

Tomlinson, R. E. (1975) Weights and wing lengths of wild Sonoran masked bobwhites during fall and winter. Wilson Bull. 87: 180-186.

Urban, D. (1972) Aspects of bobwhite quail mobility during spring through fall months. Proc. Natl. Bobwhite Quail Symp. 1: 194-199.

Walsberg, G. E.; King, J. R. (1978) The relationship of the external surface area of birds to skin surface area and body mass. J. Exp. Biol. 76: 185-189.

Wiseman, D. S.; Lewis, J. C. (1981) Bobwhite use of habitat in tallgrass rangeland. Wildl. Soc. Bull. 9: 248-255.

Wood, K. N.; Guthery, F. S.; Koerth, N. E. (1986) Spring-summer nutrition and condition of northern bobwhites in south Texas. J. Wildl. Manage. 50: 84-88.

Yoho, N. S.; Dimmick, R. W. (1972) Habitat utilization by bobwhite quail during winter. Proc. Natl. Bobwhite Quail Symp. 1: 90-99.

2.1.10. American Woodcock (woodcock and snipe)

Order *Charadriformes*, Family *Scolopacidae*. These inland members of the sandpiper family have a stocky build, long bill, and short legs. However, their habitats and diet are distinct. Woodcock inhabit primarily woodlands and abandoned fields, whereas snipe are found in association with bogs and freshwater wetlands. Both species use their long bills to probe the substrate for invertebrates. The woodcock and snipe are similar in length, although the female woodcock weighs almost twice as much as the female snipe.

Selected species

The American woodcock (*Scolopax minor*) breeds from southern Canada to Louisiana throughout forested regions of the eastern half of North America. The highest breeding densities are found in the northern portion of this range, especially in the Great Lakes area of the United States, northern New England, and southern Canada (Gregg, 1984; Owen et al., 1977). Woodcock winter primarily in the southeastern United States and are year-round residents in some of these areas. Woodcock are important game animals over much of their range (Owen et al., 1977).

Body size. Woodcock are large for sandpipers (28 cm bill tip to tail tip), and females weigh more than males (Keppie and Redmond, 1988). Most young are full grown by 5 to 6 weeks after hatching (Gregg, 1984).

Habitat. Woodcock inhabit both woodlands and abandoned fields, particularly those with rich and moderately to poorly drained loamy soils, which tend to support abundant earthworm populations (Cade, 1985; Owen and Galbraith, 1989; Rabe et al., 1983a). In the spring, males use early successional open areas and woods openings, interspersed with low brush and grassy vegetation, for singing displays at dawn and dusk (Cade, 1985; Keppie and Redmond, 1985). Females nest in brushy areas of secondary growth woodlands near their feeding areas, often near the edge of the woodland or near a break in the forest canopy (Gregg, 1984). During the summer, both sexes use second growth hardwood or early successional mixed hardwood and conifer woodlands for diurnal cover (Cade, 1985). At night, they move into open pastures and early successional abandoned agricultural fields, including former male singing grounds, to roost (Cade, 1985; Dunford and Owen, 1973; Krohn, 1970). During the winter, woodcock use bottomland hardwood forests, hardwood thickets, and upland mixed hardwood and conifer forests during the day. At night, they use open areas to some degree, but also forested habitats (Cade, 1985). Diurnal habitat and nocturnal roosting fields need to be in close proximity to be useful for woodcock (Owen et al., 1977).

Food habits. Woodcocks feed primarily on invertebrates found in moist upland soils by probing the soil with their long prehensile-tipped bill (Owen et al., 1977; Sperry, 1940). Earthworms are the preferred diet, but when earthworms are not available, other soil invertebrates are consumed (Miller and Causey, 1985; Sperry, 1940; Stribling and Doerr, 1985). Some seeds and other plant matter may also be consumed (Sperry, 1940). Krohn (1970) found that during summer most feeding was done in wooded areas prior to entering fields at night, but other studies have indicated that a significant amount of food

is acquired during nocturnal activities (Britt, 1971, as cited in Dunford and Owen, 1973). Dyer and Hamilton (1974) found that during the winter in southern Louisiana, woodcock exhibited three feeding periods: early morning (0100 to 0500 hours) in the nocturnal habitat, midday (1000 to 1300 hours) in the diurnal habitat, and at dusk (1700 to 2100 hours) again in the nocturnal fields; earthworms and millipedes were consumed in both habitat types. Most of the woodcocks' metabolic water needs are met by their food (Mendall and Aldous, 1943, as cited in Cade, 1985), but captive birds have been observed to drink (Sheldon, 1967). The chicks leave the nest soon after hatching, but are dependent on the female for food for the first week after hatching (Gregg, 1984).

Molt. Woodcock molt twice annually. The prenuptial molt involves body plumage, some wing coverts, scapulars, and tertials and occurs in late winter or early spring; the complete postnuptial molt takes place in July or August (Bent, 1927).

Migration. Fall migration begins in late September and continues through December, often following the first heavy frost (Sheldon, 1967). The migration may take 4 to 6 weeks (Sheldon, 1967). Some woodcock winter in the south Atlantic region, while those that breed west of the Appalachian Mountains winter in Louisiana and other Gulf States (Martin et al., 1969, as cited in Owen et al., 1977). Woodcock are early spring migrants, leaving their wintering grounds in February and arriving on their northern breeding grounds in late March to early April (Gregg, 1984; Sheldon, 1967; Owen et al., 1977). Dates of woodcock arrival at their breeding grounds vary from year to year depending on the timing of snowmelt (Gregg, 1984). Sheldon (1967) summarizes spring and fall migration dates by States from numerous studies.

Breeding activities and social organization. From their arrival in the spring, male woodcock perform daily courtship flights at dawn and at dusk, defending a site on the singing grounds in order to attract females for mating (Owen et al., 1977; Gregg, 1984). Often several males display on a single singing ground, with each defending his own section of the area. Females construct their nests on the ground, usually at the base of a tree or shrub located in a brushy area adjacent to an opening or male singing ground (Gregg and Hale, 1977; McAuley et al., 1990; Owen et al., 1977). Females are responsible for all of the incubation and care of their brood (Trippensee, 1948). The young leave the nest soon after hatching and can sustain flight by approximately 18 days of age (Gregg, 1984).

Home range and resources. The home range of woodcocks encompasses both diurnal cover areas and nocturnal roosting areas and varies in size depending on season and the distribution of feeding sites and suitable cover. During the day, movements are usually limited until dusk, when woodcock fly to nocturnal roost sites. Hudgins et al. (1985) and Gregg (1984) found spring and summer diurnal ranges to be only 1 to 10 percent of the total home range. Movement on the nocturnal roost sites also is limited; however, during winter, woodcock are more likely to feed and move around at night (Bortner, pers. comm.). Singing males generally restrict their movements more than non-singing males, juveniles, and females (Owen et al., 1977).

Population density. The annual singing-ground survey conducted by the United States and Canada provides information on the population trends of woodcock in the

northern states and Canada during the breeding season (note from B. Bortner, U.S. Fish and Wildlife Service, Office of Migrating Bird Management, to Susan Norton, January 9, 1992). Gregg (1984) summarized results of several published singing-ground surveys and found estimates to vary from 1.7 male singing grounds per 100 ha in Minnesota (Godfrey, 1974, cited in Gregg, 1984) to 10.4 male singing grounds per 100 ha in Maine (Mendall and Aldous, 1943, cited in Gregg, 1984). Although this method is appropriate for assessing population trends, flushing surveys, telemetry, and mark-recapture are better methods for estimating woodcock densities because there are variable numbers of females and nonsinging males associated with active singing grounds (Dilworth, Krohn, Riffenberger, and Whitcomb pers. comm., cited by Owen et al., 1977). For example, Dwyer et al. (1988) found 2.2 singing males per 100 ha in a wildlife refuge in Maine, but with mark-recapture techniques, they found yearly summer densities of 19 to 25 birds per 100 ha in the same area.

Population dynamics. Woodcocks attempt to raise only a single brood in a given year but may renest if the initial clutch is destroyed (McAuley et al., 1990; Sheldon, 1967). In 12 years of study in Wisconsin, Gregg (1984) found 42 percent of all nests to be lost to predators and another 11 percent lost to other causes. Survival of juveniles in their first year ranges from 20 to 40 percent, and survival of adults ranges from 35 to 40 percent for males to approximately 40 to 50 percent for females (Dwyer and Nichols, 1982; Krohn et al., 1974). Derleth and Sepik (1990) found high adult survival rates (0.88 to 0.90 for both sexes) between June and October in Maine, indicating that adult mortality may occur primarily in the winter and early spring. They found lower summer survival rates for young woodcock between fledging and migration than for adults during the same months, with most losses of young attributed to predation.

Similar species (from general references)

- The common snipe (*Gallinago gallinago*) is similar in length (27 cm) to the woodcock, although lighter in weight. Snipe are primarily found in association with bogs and freshwater wetlands and feed on the various invertebrates associated with wetland soils. Snipe breed primarily in boreal forest regions and thus are found slightly north of the woodcock breeding range, with some areas of overlap in the eastern half of the continent. The breeding range of the snipe, however, extends westward to the Pacific coast and throughout most of Alaska, thus occupying a more extensive east-west range than the woodcock.

General references

Cade (1985); Dwyer et al. (1979); Dwyer and Storm (1982); Gregg (1984); National Geographic Society (1987); Owen et al. (1977); Sheldon (1967); Trippensee (1948).

American Woodcock (*Scolopax minor*)

Factors	Age/Sex/ Cond./Seas.	Mean	Range or (95% CI of mean)	Location	Reference	Note No.
Body Weight (g)	A M	176		throughout range	Nelson & Martin, 1953	
	A F	218				
	A M April	134.6 ± 2.9 SE		Maine	Dwyer et al., 1988	
	A M May	133.8 ± 5.8 SE				
	A M June	151.2 ± 9.5 SE				
	A M summer	145.9	127 - 165	central Massachusetts	Sheldon, 1967	
	J M summer	140.4	117 - 152			
	A F summer	182.9	162 - 216			
	J F summer	168.8	151 - 192			
	A M fall	169		Minnesota	Marshall (unpubl.)	1
	J M fall	164				
	A F fall	213				
	J F fall	212				
	at hatching	13.0	9 - 16	Wisconsin	Gregg, 1984	
Egg Weight (g)	at laying	18 - 19		Wisconsin	Gregg, 1984	
	near hatching	14 - 16				
Chick Growth Rate (g/day)	M	5.1		Maine	Dwyer et al., 1982	
	F	6.2				
Metabolic Rate (kcal/kg-day)	A F basal	115		s Michigan	Rabe et al., 1983b	2
	A M basal	126			estimated	3
	A F basal	118				
	A F free-living	315		s Michigan	Rabe et al., 1983b	4
	A F nesting	553				
	A M free-living	313	(148 - 662)		estimated	5
	A F free-living	296	(140 - 627)			

American Woodcock (*Scolopax minor*)

Factors	Age/Sex/ Cond./Seas.	Mean	Range or (95% CI of mean)	Location	Reference	Note No.
Food Ingestion Rate (g/g-day)	A B winter (earthworm diet)	0.77	0.11 - 1.43	Louisiana (captive)	Stickel et al., 1965	
Water Ingestion Rate (g/g-day)	A M A F	0.10 0.10			estimated	6
Inhalation Rate (m^3/day)	A M A F	0.11 0.13			estimated	7
Surface Area (cm^2)	A M A F	314 362			estimated	8

Dietary Composition		Summer	Fall	Winter	Location/Habitat (measure)	Reference	Note No.
earthworms Diptera Coleoptera Lepidoptera other animals plants		67.8 6.9 6.2 3.3 5.3 10.5			North America/NS (% volume; stomach contents)	Sperry, 1940	
earthworms beetle larvae grit (inorganic) other organic		58 10 31 1			Maine/fields (% wet weight; mouth esophagus, stomach, & proventriculus contents)	Krohn, 1970	9
earthworms other invertebrates				99+ <1	N Carolina/soybean fields (% wet weight; digestive tract)	Stribling & Doerr, 1985	
earthworms Coleoptera Hymenoptera				87 11 2	Alabama/NS (% volume; esophagus contents)	Miller & Causey, 1985	10

American Woodcock (*Scolopax minor*)

Population Dynamics	Age/Sex Cond./Seas.	Mean	Range	Location/Habitat	Reference	Note No.
Home Range Size (ha)	A M inactive A M active A M singing	3.1 (median) 73.6 (median) 10.5 (median)	0.3 - 6.0 38.2 - 171.2 4.6 - 24.1	Pennsylvania/mixed forests with shrubs and fields	Hudgins et al., 1985	
	B B summer A F with brood	32.4 ± 27.6 SD 4.5	7 - 98	Wisconsin/woods, open areas, brush	Gregg, 1984	
Population Density (birds/ha)	B B winter B B winter B B winter	3.38 0.20 0.034		North Carolina/agricultural: untilled soy stubble untilled corn stubble rebedded corn fields	Connors & Doerr, 1982	
	nests in spring	0.21 (nests/ha)		Pennsylvania/mixed pine and hardwoods, open fields	Coon et al., 1982	
	A M summer A F summer J B summer B B summer	0.035 0.056 0.125 0.223	0.026 - 0.046 0.037 - 0.074 0.108 - 0.143 0.190 - 0.250	Maine/second growth forest, meadows, and ponds	Dwyer et al., 1988	
Clutch Size		4	3 - 5	throughout range and habitats	Bent, 1927	
	1st clutch 2nd clutch	3.8 ± 0.42 SD 3.0 ± 0.67 SD		Maine/mixed forests, agricultural fields	McAuley et al., 1990	
Clutches/ Year		1 but renest if 1st lost		throughout range and habitats	McAuley et al., 1990	
Percent Nests Hatching		about 50		Maine/mixed forests, fields	McAuley et al., 1990	
Days Incubation		19 - 21		NS/NS	Mendall & Aldous, 1943; Pettingill, 1936	11
Age at Fledging		18 - 19 days		Wisconsin/woods, open areas, brush	Gregg, 1984	

American Woodcock (*Scolopax minor*)

Population Dynamics	Age/Sex Cond./Seas.	Mean	Range	Location/Habitat	Reference	Note No.
Age at Sexual Maturity	M F	< 1 year 1 year		throughout range and habitats	Sheldon, 1967	
Annual Mortality Rates	A M east A M central J M east J M central A F east A F central J F east J F central	65 ± 5.2 SD 60 ± 15 SD 80 ± 4.8 SD 64 ± 12 SD 51 ± 7.3 SD 47 ± 9.6 SD 64 ± 7.7 SD 69 ± 9.4 SD		eastern and central United States/NS	Dwyer & Nichols, 1982	
Seasonal Activity			End		Reference	Note No.
Mating/Laying	early February early April		mid-March	Texas Maine	Whiting & Boggus, 1982 Dwyer et al., 1982	
Hatching	early February late February late March mid-April	early May mid-May	early June	Louisiana Virginia Connecticut Massachusetts Maine	Pettingill, 1936 Pettingill, 1936 Pettingill, 1936 Sheldon, 1967 Dwyer et al., 1982	1 1 1
Molt		August to early September		NS/NS	Owen & Krohn, 1973	12
Migration spring	mid-February March	April	early March	leaving North Carolina arriving in northern range	Connors & Doerr, 1982 Gregg, 1984	
fall	October late September		December mid-December	arriving North Carolina leaving Canada	Sheldon, 1967 Owen et al., 1977	

American Woodcock (*Scolopax minor*)

1 As cited in Sheldon (1967).
2 Metabolic rate estimated by authors from equation of Aschoff and Pohl (1970).
3 Estimated using equation 3-28 (Lasiewski and Dawson, 1967) and summer body weights from Nelson and Martin (1953).
4 Estimate of free-living metabolism based on energy budget model. Metabolism during nesting estimated for peak needs during egg-laying.
5 Estimated using equation 3-37 (Nagy, 1987) and summer body weights from Nelson and Martin (1953).
6 Estimated using equation 3-15 (Calder and Braun, 1983) and summer body weights from Nelson and Martin (1953).
7 Estimated using equation 3-19 (Lasiewski and Calder, 1971) and summer body weights from Nelson and Martin (1953).
8 Estimated using equation 3-21 (Meeh, 1879 and Rubner, 1883, as cited in Walsberg and King, 1978) and summer body weights from Nelson and Martin (1953).
9 Grit comprised only 14 percent of total digestive tract contents volume.
10 Should provide a more accurate estimate of proportion of soft-bodied earthworms consumed than would including other portions of the digestive tract.
11 Cited in Trippensee (1948).
12 Cited in Owen et al. (1977).

References (including Appendix)

Aldous, C. M. (1938) Woodcock management studies in Maine 1937. Trans. North Am. Wildl. Nat. Resour. Conf. 3: 839-846.

Aschoff, J.; Pohl, H. (1970) Rhythmic variations in energy metabolism. Fed. Proc. 29: 1541-1552.

Bent, A. C. (1927) Life histories of North American shore birds. Part 1. Washington, DC: U.S. Government Printing Office; Smithsonian Inst. U.S. Nat. Mus., Bull. 142.

Britt, T. L. (1971) Studies of woodcock on the Louisiana wintering ground [master's thesis]. Shreveport, LA: Louisiana State University.

Cade, B. S. (1985) Habitat suitability index models: American woodcock (wintering). U.S. Fish Wildl. Serv. Biol. Rep. 82(10.105).

Calder, W. A.; Braun, E. J. (1983) Scaling of osmotic regulation in mammals and birds. Am. J. Physiol. 244: R601-R606.

Connors, J. I.; Doerr, P. D. (1982) Woodcock use of agricultural fields in coastal North Carolina. In: Dwyer, T. J.; Storm, G. W., tech. coords. Woodcock ecology and management. U.S. Fish Wildl. Serv., Wildl. Res. Rep. 14; pp. 139-147.

Coon, R. A.; Williams, B. K.; Lindzey, J. S.; et al. (1982) Examination of woodcock nest sites in central Pennsylvania. U.S. Fish Wildl. Serv., Wildl. Res. Rep. 14; pp. 55-62.

Derleth, E. L.; Sepik, G. F. (1990) Summer-fall survival of the American woodcock in Maine. J. Wildl. Manage. 54: 97-106.

Dunford, R. D.; Owen, R. B. (1973) Summer behavior of immature radio-equipped woodcock in central Maine. J. Wildl. Manage. 37: 462-469.

Dwyer, T. J.; Nichols, J. D. (1982) Regional population inferences for the American woodcock. In: Dwyer, T. J.; Storm, G. L., tech. coords. Woodcock ecology and management. U.S. Fish Wildl. Serv., Wildl. Res. Rep. 14; pp. 12-21.

Dwyer, T. J.; Storm, G. L., eds. (1982) Woodcock ecology and management. U.S. Fish Wildl. Serv., Wildl. Res. Rep. 14.

Dwyer, T. J.; Coon, R. A.; Geissler, P. H. (1979) The technical literature on the American woodcock 1927-1978. Laurel, MD: U.S. Fish Wildl. Serv., Migratory Bird and Habitat Research Laboratory.

Dwyer, T. J.; Derleth, E. L.; McAuley, D. G. (1982) Woodcock brood ecology in Maine. U.S. Fish Wildl. Serv., Wildl. Res. Rep. 14; pp. 63-70.

Dwyer, T. J.; Sepik, G. F.; Derleth, E. L.; et al. (1988) Demographic characteristics of Maine woodcock population and effects of habitat management. Washington, DC: U.S. Fish Wildl. Serv. Res. Rep. 4.

Dyer, J. M.; Hamilton, R. B. (1974) An analysis of feeding habits of the American woodcock (*Philohela minor*) in southern Louisiana. In: Fifth American woodcock workshop proceedings; December 3-5, 1974; Athens, GA. Athens, GA: University of Georgia.

Godfrey, G. A. (1974) Behavior and ecology of American woodcock on the breeding range in Minnesota [Ph.D. dissertation]. Minneapolis, MN: University of Minnesota.

Greeley, F. (1953) Sex and age studies in fall-shot woodcock (*Philohela minor*) from southern Wisconsin. J. Wildl. Manage. 17: 29-32.

Gregg, L. (1984) Population ecology of woodcock in Wisconsin. Wis. Dept. Nat. Resour. Tech. Bull. No. 144; 51 pp.

Gregg, L. E.; Hale, J. B. (1977) Woodcock nesting habitat in northern Wisconsin. Auk 94: 489-493.

Hudgins, J. E.; Storm, G. L.; Wakeley, J. S. (1985) Local movements and diurnal-habitat selection by male woodcock in Pennsylvania. J. Wildl. Manage. 49: 614-619.

Johnson, R.C.; Causey, M. K. (1982) Use of longleaf pine stands by woodcock in southern Alabama following prescribed burning. In: Dwyer, T. J.; Storm, G. W., tech. coords. Woodcock ecology and management. U.S. Fish Wildl. Serv., Wildl. Res. Rep. 14; pp. 120-125.

Keppie, D. M.; Redmond, G. W. (1985) Body weight and the possession of territory for male American woodcock. Condor 87: 287-290.

Keppie, D. M.; Redmond, G. W. (1988) A review of possible explanations for reverse size dimorphism of American woodcock. Can. J. Zool. 66: 2390-2397.

Krohn, W. B. (1970) Woodcock feeding habits as related to summer field usage in central Maine. J. Wildl. Manage. 34: 769-775.

Krohn, W. B.; Martin, F. W.; Burnham, K. P. (1974) Band-recovery distribtution and survival estimates of Maine woodcock. Proc. Am. Woodcock Workshop 5: 1-8.

Lasiewski, R. C.; Calder, W. A. (1971) A preliminary allometric analysis of respiratory variables in resting birds. Resp. Phys. 11: 152-166.

Lasiewski, R. C.; Dawson, W. R. (1967). A reexamination of the relation between standard metabolic rate and body weight in birds. Condor 69: 12-23.

Martin, F. W.; Williams, S. O.; Newsom, J. D.; et al. (1969) Analysis of records of Louisiana-banded woodcock. Proc. Ann. Conf. Southeast. Assoc. Game and Fish Comm. 23: 85-96.

McAuley, D. G.; Longcore, J. R.; Sepik, G. F. (1990) Renesting by American woodcock (*Scolopax minor*) in Maine. Auk 107: 407-410.

Meeh, K. (1879) Oberflachenmessungen des mensclichen Korpers. Z. Biol. 15: 426-458.

Mendall, H. L.; Aldous, C. M. (1943) The ecology and management of the American woodcock. Orono, ME: Maine Coop. Res. Unit, University of Maine; 201 pp.

Miller, D. L.; Causey, M. K. (1985) Food preferences of American woodcock wintering in Alabama. J. Wildl. Manage. 49: 492-496.

Nagy, K. A. (1987) Field metabolic rate and food requirement scaling in mammals and birds. Ecol. Monogr. 57: 111-128.

National Geographic Society. (1987) Field guide to the birds of North America. Washington, DC: National Geographic Society.

Nelson, A. L.; Martin, A. C. (1953) Gamebird weights. J. Wildl. Manage. 17: 36-42.

Norris, R. T.; Buele, J. D.; Studholme, A. T. (1940) Banding woodcocks on Pennsylvania singing grounds. J. Wildl. Manage. 4: 8-14.

Owen, R. B.; Galbraith, W. J. (1989) Earthworm biomass in relation to forest types, soil, and land use: implications for woodcock management. Wildl. Soc. Bull. 17: 130-136.

Owen, R. B.; Krohn, W. B. (1973) Molt patterns and weight changes of the American woodcock. Wilson Bull. 85: 31-41.

Owen, R. B.; Morgan, J. W. (1975) Summer behavior of adult radio-equipped woodcock in central Maine. J. Wildl. Manage. 39: 179-182.

Owen, R. B.; Anderson, J. M.; Artmann, J. W.; et al. (1977) American woodcock. In: Sanderson, G. C., ed. Management of migratory shore and upland game birds in North America. Washington, DC: Int. Assoc. Fish Wildl. Agencies; pp. 147-175.

Pettingill, O. S., Jr. (1936) The American woodcock. Boston Soc. Nat. Hist. Mem. 9(2).

Rabe, D. L.; Prince, H. H.; Beaver, D. L. (1983a) Feeding-site selection and foraging strategies of American woodcock. Auk 100: 711-716.

Rabe, D. L.; Prince, H. H.; Goodman, E. D. (1983b) The effect of weather on bioenergetics of breeding American woodcock. J. Wildl. Manage. 47: 762-771.

Rubner, M. (1883) Uber den Einfluss der Korpergrosse auf Stoff- und Kraftweschsel. Z. Biol. 19: 535-562.

Sheldon, W. G. (1967) The book of the American woodcock. Amherst, MA: University of Massachusetts Press.

Sperry, C. (1940) Food habits of a group of shore birds; woodcock, snipe, knot, and dowitcher. U.S. Dept. Int., Bur. Biol. Survey, Wildl. Res. Bull. 1; 37 pp.

Stickel, W. H.; Hayne, D. W.; Stickel, L. F. (1965) Effects of heptachlor-contaminated earthworms on woodcocks. J. Wildl. Manage. 29: 132-146.

Stribling, H. L.; Doerr, P. D. (1985) Nocturnal use of fields by American woodcock. J. Wildl. Manage. 49: 485-491.

Trippensee, R. E. (1948) American woodcock. Wildlife management. New York, NY: McGraw-Hill; pp. 323-332.

Tufts, R. W. (1940) Some studies in bill measurements and body weights of American woodcock (*Philohela minor*). Can. Field-Nat. 54: 132-134.

Walsberg, G. E.; King, J. R. (1978) The relationship of the external surface area of birds to skin surface area and body mass. J. Exp. Biol. 76: 185-189.

Wetherbee, D. K.; Wetherbee, N. S. (1961) Artificial incubation of eggs of various bird species and some attributes of neonates. Bird Banding 32: 141-159.

Whiting, R. M.; Boggus, T. G. (1982) Breeding biology of American woodcock in east Texas. In: Dwyer, T. J.; Storm, G. W., tech. coords. Woodcock ecology and management. U.S. Fish Wildl. Serv., Wildl. Res. Rep. 14; pp. 132-138.

2.1.11. Spotted Sandpiper (sandpipers)

Order *Charadriiformes*, Family *Scolopacidae*. The family *Scolopacidae* includes numerous species of shorebirds, e.g., sandpipers, tattlers, knots, godwits, curlews, yellowlegs, willets, and dowitchers. Those known as sandpipers tend to be small with moderately long legs and bills. Most sandpipers forage on sandy beaches and mudflats; a few utilize upland areas. They feed almost exclusively on small invertebrates, either by probing into or gleaning from the substrate. Most species are highly migratory, breeding in arctic and subarctic regions and either wintering along the coasts or in southern latitudes and the southern hemisphere; therefore, many are only passage migrants throughout most of the United States. Scolapids range in size from the least sandpiper (11.5 cm bill tip to tail tip) to the long-billed curlew (48 cm).

Selected species

The spotted sandpiper (*Actitis macularia*) (19 cm) is a very common summer resident of freshwater and saltwater bodies throughout most of the United States. These sandpipers are most often encountered singly but may form small flocks. Most winter in the neotropics.

Body size. Females (approximately 50 g) are significantly larger than males (approximately 40 g) (Oring and Lank, 1986).

Habitat. Spotted sandpipers breed along the edges of bodies of water, usually in open habitats, from the northern border of the boreal forest across North America, south to the central United States (Oring and Lank, 1986). They require open water for bathing and drinking, semi-open habitat for nesting, and dense vegetation for breeding (Bent, 1929; Oring et al., 1983).

Food habits. In coastal areas, spotted sandpipers search the beach and muddy edges of inlets and creeks, wading less frequently than most sandpipers; inland they feed along the shores of sandy ponds and all types of streams, sometimes straying into meadows, fields, and gardens in agricultural areas (Bent, 1929). Their diet is composed primarily of terrestrial and marine insects (Bent, 1929). While adult flying insects comprise the bulk of the diet, crustaceans, leeches, molluscs, small fish, and carrion also are eaten (Oring et al., 1983). Young feed themselves immediately after hatching, concentrating on small invertebrates (Oring and Lank, 1986). During insect outbreaks, sandpipers will forage in wooded areas near water, and they have been observed eating eggs and fish on occasion (Oring, pers. obs.).

Molt. Partial prenuptial molt of body plumage occurs in March and April, while the postnuptial molt begins by August with the body feathers and ends anywhere from October to April with the loss of the primary flight feathers (Bent, 1929).

Migration. Spotted sandpipers generally migrate in small flocks or solitarily (National Geographic Society, 1987). They winter from southern United States to northern Chile, Argentina, and Uraguay (Oring and Lank, 1986), and breed across North

America, north from Virginia and southern California (National Geographic Society, 1987). In the spring, females arrive at the breeding grounds earlier than males (in one study, by about 2 weeks; Oring and Lank, 1982).

Breeding activities and social organization. The primary consideration for nesting sites is proximity to water, and spotted sandpipers have been known to build their ground nests in such diverse conditions as depressions in volcanic rock and strawberry patches (Bent, 1929). Spotted sandpipers are polyandrous (i.e., a single female lays eggs for multiple males), with males supplying most of the incubation and parental care (Oring, 1982). Thus reproduction is limited by the number of males present (Lank et al., 1985). Spotted sandpipers lay a determinate clutch of four eggs. Females may lay several clutches in a year, often a dozen eggs per season (Maxson and Oring, 1980). Egg laying begins between late May and early June in Minnesota (Lank et al., 1985), and males incubate after the third egg is laid (Oring et al., 1986). Females sometimes incubate and brood when another male is not available (Maxson and Oring, 1980). Parents brood small chicks and protect them with warning calls or by distracting or attacking predators (Oring and Lank, 1986).

Home range and resources. Although a variety of vegetation types are used, nests usually are placed in semi-open vegetation near the edge of a lake, river, or ocean (Oring et al., unpubl., as cited in Oring et al., 1983; McVey, pers. obs.). The suitability of nesting habitat varies from year to year in some locations due to levels of precipitation and predators (Oring et al., 1983).

Population density. Spotted sandpiper nesting densities have been studied well at only one location, on Little Pelican Island, Leech Lake, Minnesota. At this location, densities ranged from 4 to 13 females per hectare and 7 to 20 males per hectare over a 10-year period, depending on weather and other conditions (Oring et al., 1983).

Population dynamics. Females may lay one to six clutches for different males over one season (Oring et al., 1984), averaging 1.3 to 2.7 mates per year (Oring et al., 1991b). Female mating and reproductive success increase with age, but male success does not (Oring et al., 1991b). Lifetime reproductive success is most affected by fledging success and longevity for both males and females (Oring et al., 1991a).

Similar species (from general references)

- The solitary sandpiper (*Tringa solitaria*) is usually seen singly in freshwater swamps or rivers. Present over much of the United States during annual migrations, this average-sized sandpiper (18 cm) winters along the southeast and Gulf coasts.

- The western sandpiper (*Calidris mauri*) is a small sandpiper (13 cm), common on mudflats and sandbars, that winters on both the Atlantic and Pacific shores of the United States.

- The least sandpiper (*Calidris minutilla*), the smallest of this group (11 cm), is common in winter on salt marshes and muddy shores of rivers and estuaries in coastal areas across the United States.

- The semipalmated sandpipers (*Calidris pusilla*) are small birds (13 cm) seen in the United States primarily during migration and rarely wintering on Florida coasts.

- Most other members of the family *Scolopacidae* forage by gleaning.

General references

Oring and Lank (1986); Lank et al. (1985); National Geographic Society (1987); Oring et al. (1991a, 1991b).

Spotted Sandpiper (*Actitis macularia*)

Factors	Age/Sex/ Cond./Seas.	Mean	Range or (95% CI of mean)	Location	Reference	Note No.
Body Weight (g)	A F spring A M spring	47.1 37.9	43 - 50 34 - 41	Minnesota island	Maxson & Oring, 1980	
Metabolic Rate (kcal/kg-day)	A F pre-breed A F laying A F incubating A M pre-breed A M incubating A M brooding	404 - 787 383 - 745 368 440 303 425		Minnesota	Maxson & Oring, 1980	1
	A F free-living A M free-living	436 460	(202 - 937) (213 - 994)		estimated	2
Food Ingestion Rate (g/g-day)						3
Water Ingestion Rate (g/g-day)	A F A M	0.16 0.17			estimated	4
Inhalation Rate (m^3/day)	A F A M	0.039 0.033			estimated	5
Surface Area (cm^2)	A F A M	131 113			estimated	6

Dietary Composition	Spring	Summer	Fall	Winter	Location/Habitat (measure)	Reference	Note No.
mayflies midges		✓ ✓			Minnesota/island in lake	Maxson & Oring, 1980	

Population Dynamics	Age/Sex Cond./Seas.	Mean	Range	Location/Habitat	Reference	Note No.
Territory Size (ha)		approx. 0.25		NS/NS	Maxson & Oring, 1980	

Spotted Sandpiper (*Actitis macularia*)

Population Dynamics	Age/Sex Cond./Seas.	Mean	Range	Location/Habitat	Reference	Note No.
Population Density (N/ha)	A F summer A M summer	10 13.9	3.8 - 12.5 7.5 - 20.0	Minnesota/island in lake	Oring et al., 1983	
Clutch Size		4	3 - 5	NS/NS	Bent, 1929; Oring et al., 1983	7
Clutches/Year			1 - 6	Minnesota/NS	Oring et al., 1983	
Days Incubation		18 to 24		NS/NS	Oring, unpublished	
Age at Fledging		approximately 18 days		NS/NS	Oring et al., 1991a	
Number Fledge per Nest That Hatches		1.83	0.58 - 2.76	Minnesota/island in lake	Oring et al., 1984	
Number Fledge per Successful Nest		2.58	1.67 - 2.91	Minnesota/island in lake	Oring et al., 1984	
Age at Sexual Maturity	F M	1 year 1 year		Minnesota/island in lake	Oring et al., 1983	
Annual Mortality Rates (percent)	F M	approx. 31 approx. 30		Minnesota/island in lake	Oring et al., 1983; Oring & Lank, 1982; Oring, unpublished	
Longevity	A F	3.7 years		Minnesota/island in lake	Oring et al., 1983	
Seasonal Activity			End			Note No.
Mating	early May	late May - early June		Minnesota	Lank et al., 1985	
Hatching	early June	late June		Minnesota	Lank et al., 1985	

Spotted Sandpiper (*Actitis macularia*)

Seasonal Activity	Begin	Peak	End	Location	Reference	Note No.
Molt fall spring	August	 March - April	October	NS	Bent, 1929 Bent, 1929	
	late June early July	early - mid-July mid-July		Minnesota	Lank et al., 1985	

1 Estimated by authors; allometric model not specified.
2 Estimated using equation 3-37 (Nagy, 1987) and body weights from Maxson and Oring (1980).
3 See Chapters 3 and 4 for methods of estimating food ingestion rates; also see Section 4.1.3 and Table 4-4 for sediment ingestion rates for sandpipers.
4 Estimated using equation 3-15 (Calder and Braun, 1983) and body weights from Maxson and Oring (1980).
5 Estimated using equation 3-19 (Lasiewski and Calder, 1971) and body weights from Maxson and Oring (1980).
6 Estimated using equation 3-21 (Meeh, 1879 and Rubner, 1883, as cited in Walsberg and King, 1978) and body weights from Maxson and Oring (1980).
7 Spotted sandpipers are determinate layers, with a clutch size of four eggs. Clutches with fewer eggs are not complete or have lost eggs; larger clutches are the result of more than one female laying in a nest.

References (including Appendix)

Bent, A. C. (1929) Life histories of North American shore birds. Part 2. Washington, DC: U.S. Government Printing Office; Smithsonian Inst. U.S. Nat. Mus., Bull. 146.

Calder, W. A.; Braun, E. J. (1983) Scaling of osmotic regulation in mammals and birds. Am. J. Physiol. 244: R601-R606.

Dunning, J. B., Jr. (1984) Body weights of 686 species of North American birds. Western Bird Banding Association, Monograph No. 1. Cave Creek, AZ: Eldon Publishing.

Kuenzel, W. J.; Wiegert, R. G. (1973) Energetics of a spotted sandpiper feeding on brine fly larvae (Paracoenia; Diptera: Ephydridae) in a thermal spring community. Wilson Bull. 85: 473-476.

Lank, D. B.; Oring, L. W.; Maxson, S. J. (1985) Mate and nutrient limitation of egg-laying in a polyandrous shorebird. Ecology 66: 1513-1524.

Lasiewski, R. C.; Calder, W. A. (1971) A preliminary allometric analysis of respiratory variables in resting birds. Resp. Phys. 11: 152-166.

Maxson, S. J.; Oring, L. W. (1980) Breeding season time and energy budgets of the polyandrous spotted sandpiper. Behaviour 74: 200-263.

Meeh, K. (1879) Oberflachenmessungen des mensclichen Korpers. Z. Biol. 15: 426-458.

Nagy, K. A. (1987) Field metabolic rate and food requirement scaling in mammals and birds. Ecol. Monogr. 57: 111-128.

National Geographic Society. (1987) Field guide to the birds of North America. Washington, DC: National Geographic Society.

Oring, L. W. (1982) Avian mating systems. In: Farner, D. S.; King, J. R., eds. Avian biology, v. 6. New York, NY: Academic Press; pp. 1-92.

Oring, L. W.; Lank, D. B. (1982) Sexual selection, arrival times, philopatry and site fidelity in the polyandrous spotted sandpiper. Behav. Ecol. Sociobiol. 10: 185-191.

Oring, L. W.; Lank, D. B. (1986) Polyandry in spotted sandpipers: the impact of environment and experience. In: Rubenstein, D. I.; Wrangham, R. W., eds. Ecological aspects of social evolution - birds and mammals; pp. 21-42.

Oring, L. W.; Lank, D. B.; Maxson, S. J. (1983) Population studies of the polyandrous spotted sandpiper. Auk 100: 272-285.

Oring, L. W.; Lank, D. B.; Maxson, S. J. (1984) Mate and nutrient limitation of breeding in the polyandrous spotted sandpiper (abstract only). Am. Zool. 24: 60A.

Oring, L. W.; Fivizzani, A. J.; Halawani, M. E. (1986) Changes in plasma prolactin associated with laying and hatch in the spotted sandpiper. Auk 103: 820-822.

Oring, L.W.; Colwell, M.A.; Reed, J.M. (1991a) Lifetime reproductive success in the spotted sandpiper (*Actitis macularia*): sex differences and variance components. Behav. Ecol. Sociobiol. 28: 425-432.

Oring, L.W.; Reed, J.M.; Colwell, M.A.; et al. (1991b) Factors regulating annual mating success and reproductive success in spotted sandpipers (*Actitis macularia*). Behav. Ecol. Sociobiol. 28: 433-442.

Palmer, R. S. (1949) Maine birds. Bull. Mus. Comp. Zool. Harvard No. 102.

Poole, E. L. (1938) Weights and wing areas in North American birds. Auk 55: 511-517.

Rubner, M. (1883) Uber den Einfluss der Korpergrosse auf Stoff- und Kraftweschsel. Z. Biol. 19: 535-562.

Walsberg, G. E.; King, J.R. (1978) The relationship of the external surface area of birds to skin surface area and body mass. J. Exp. Biol. 76: 185-189.

Zar, J. H. (1968) Standard metabolism comparisons between orders of birds. Condor 10: 278.

2.1.12. Herring Gull (gulls)

Order *Charadriiformes*, Family *Laridae*. Gulls are medium- to large-sized sea birds with long pointed wings, a stout, slightly hooked bill, and webbed feet. They are abundant in temperate coastal areas and throughout the Great Lakes. Although gulls may feed from garbage dumps and landfills, most take natural prey. Gulls nest primarily in colonies, although some of the larger species also nest solitarily. Many populations migrate annually between breeding and wintering areas. North American gull species range in size from Bonaparte's gull (33 cm bill tip to tail tip) to the great black-backed gull (76 cm).

Selected species

The herring gull (*Larus argentatus*) (64 cm) has the largest range of any North American gull, from Newfoundland south to the Chesapeake Bay along the north Atlantic and west throughout the Great Lakes into Alaska. Along the Pacific coast, the similar-sized western gull (*L. occidentalis*) is the ecological equivalent of the herring gull. Both species take primarily natural foods, especially fish, although some individuals of both species forage around fishing operations and landfills (Pierotti, 1981, 1987; Pierotti and Annett, 1987). The increase in number of herring gulls in this century has been attributed to the increasing abundance of year-round food supplies found in landfills (Drury, 1965; Harris, 1970); however, birds specializing on garbage have such low reproductive success that they cannot replace themselves in the population (Pierotti and Annett, 1987, 1991). An alternative explanation of the species' expansion is that cessation of taking of gulls by the feather industry in the late 1800's has allowed gull numbers to return to pre-exploitation levels (Graham, 1975).

Body size. Adult females (800 to 1,000 g) are significantly smaller than males (1,000 to 1,300 g) in both the herring gull (Greig et al., 1985) and the western gull (Pierotti, 1981). Chicks grow from their hatching weight of about 60 to 70 g to 800 to 900 g within 30 to 40 days, after which time their weight stabilizes (Dunn and Brisbin, 1980; Norstrom et al., 1986; Pierotti, 1982). Norstrom et al. (1986) fitted chick growth rates to the Gompertz equation as follows:

$$BW = 997\ e^{-e(-0.088(t - 14.8))} \qquad \text{for females, and}$$

$$BW = 1193\ e^{-e(-0.075(t - 16.3))} \qquad \text{for males,}$$

where BW equals body weight in grams and t equals days after hatching. Adults show seasonal variation in body weight (Coulson et al., 1983; Norstrom et al., 1986).

Habitat. Nesting colonies of herring gulls along the northeastern coast of the United States are found primarily on sandy or rocky offshore or barrier beach islands (Kadlec and Drury, 1968). In the Great Lakes, they are found on the more remote, secluded, and protected islands and shorelines of the lakes and their connecting rivers (Weseloh, 1989). Smaller colonies or isolated pairs also can be found in coastal marshes (Burger, 1980a), peninsulas, or cliffs along seacoasts, lakes, and rivers (Weseloh, 1989), and occasionally in inland areas or on buildings or piers (Harris, 1964). Gulls are the most abundant seabirds

offshore from fall through spring, and are only found predominantly inshore during the breeding season in late spring and summer (Powers, 1983; Pierotti, 1988). Gulls forage predominantly offshore, within 1 to 5 km of the coast (Pierotti, 1988). In all seasons the number of birds feeding at sea outnumber those feeding inshore (data from Powers, 1983; Pierotti, pers. comm.). Inshore, herring gulls forage primarily in intertidal zones but also search for food in wet fields, around lakes, bays, and rock jetties, and at landfills in some areas (Burger, 1988). In Florida, herring gull presence at landfills is restricted to the winter months (December through April) and may consist primarily of first-year birds that migrated from more northerly populations (e.g., from the Great Lakes) (Patton, 1988).

Food habits. Gulls feed on a variety of foods depending on availability, including fish, squid, crustacea, molluscs, worms, insects, small mammals and birds, duck and gull eggs and chicks, and garbage (Bourget, 1973; Burger, 1979a; Fox et al., 1990; Pierotti and Annett, 1987). Gulls forage on open water by aerial dipping and shallow diving around concentrations of prey. At sea, such concentrations often are associated with whales or dolphins, other seabirds, or fishing boats (McCleery and Sibly, 1986; Pierotti, 1988). In the Great Lakes, concentrations of species such as alewife occur seasonally (e.g., when spawning) (Fox et al., 1990). Gulls also forage by stealing food from other birds and by scavenging around human refuse sites (e.g., garbage dumps, fish plants, docks, and seaside parks) (Burger and Gochfeld, 1981; 1983; Chapman and Parker, 1985). Individual pairs of gulls may specialize predominantly on a single type of food; for example, three quarters of a population of herring gulls in Newfoundland were found to specialize either on blue mussels, garbage, or adults of Leach's storm-petrel, with 60 percent of the specialists concentrating on mussels between 0.5 and 3 cm in length (Pierotti and Annett, 1987; 1991). Diet choices may change with the age and experience of adult birds as well as with availability of prey (Pierotti and Annett, 1987; 1991). Females take smaller prey and feed less on garbage than do males (Pierotti, 1981; Greig et al., 1985). For example, Fox et al. (1990) found females to feed more on smelt (100 to 250 mm) and males more on alewife (250 to 300 mm) in the Great Lakes region. Adult gulls sometimes attack and eat chicks of neighboring gulls or other species of seabird (Brown, 1967; Schoen and Morris, 1984). Juveniles up to 3 years of age forage less efficiently than adults (Greig et al., 1983; MacLean, 1986; Verbeek, 1977). In the Great Lakes, herring gulls' high consumption of alewife during their spawn may result in high exposures of the gulls to lipophilic contaminants that biomagnify (Fox et al., 1990).

Metabolism. Norstrom et al. (1986) have estimated an annual energy budget for free-living female herring gulls that breed in the Great Lakes and an annual energy budget for free-living juvenile herring gulls in the Great Lakes in their first year. Between September and March, the nonbreeding season, they estimate that adult females require 250 to 260 kcal/day. Following a dip in energy requirements to 210 kcal/day when the male feeds the female during courtship, the female's needs increase to peak at 280 kcal/day for egg production, then fall to approximately 210 kcal/day during incubation. The energy required to forage for food for the chicks is substantial, rising through July to peak in August at 310 to 320 kcal/day, then declining again until September when feeding chicks has ceased. These estimates compare well with those derived from Nagy's (1987) equation to estimate free-living metabolic rates for seabirds, except that the energy peaks required to produce eggs and to feed chicks are not included in Nagy's model. Readers interested in the metabolic rates of first-year herring gulls are referred to Norstrom et al. (1986). Ellis

(1984) provides an overview of seabird energetics and additional discussion of approaches and models for estimating metabolic rates of free-ranging seabirds.

Molt. Gull chicks are downy gray with dark brown spotting and molt into a dark-gray or brown mottled juvenile plumage. At the end of the first year, portions of the plumage have paled, and by the second year, gray plumage develops along the back and top of wings. By their third year, young gulls resemble dirty adults, and they acquire their full adult plumage by 4 years (Harrison, 1983; Kadlec and Drury, 1968). Adult gulls, at least in some populations, begin their primary feather molt during incubation and complete the molt by mid- to late fall (Coulson et al., 1983). They molt and replace the large body feathers from mid-summer to early fall (Coulson et al., 1983).

Migration. Herring gull populations along the northeast coast of North America tend to be migratory, while adult herring gulls of the Great Lakes are year-round residents. Along the western North Atlantic, most herring gulls arrive on their breeding grounds between late February and late April. They remain until late August or early September when they leave for their wintering grounds along the Atlantic and Gulf coasts or well offshore (Burger, 1982; Pierotti, 1988). Adult and older subadult herring gulls in the Great Lakes area are essentially nonmigratory (Mineau et al., 1984; Weseloh et al., 1990). Thus, in contrast to other fish-eating birds in the Great Lakes system that migrate south in the winter, herring gulls are exposed to any contaminants that may be in Great Lakes' fish throughout the year (Mineau et al., 1984). Postbreeding dispersal away from breeding colonies begins in late July and ends in August, with all ages traveling short distances. Great Lakes herring gulls less than a year old usually migrate to the Gulf or Atlantic coast (Smith, 1959; Mineau et al., 1984), traveling along river systems and the coast (Moore, 1976).

Breeding activities and social organization. Gulls nest primarily in colonies on offshore islands, and nest density is strongly affected by population size (Pierotti, 1981; 1982; 1987). Typically, males arrive at the breeding grounds first and establish territories. Both sexes build the nest of vegetation on the ground in areas that are sheltered from wind but may be exposed to the sun (Pierotti, 1981; 1982). Males feed females for 10 to 15 days prior to the start of egg laying (Pierotti, 1981). From the laying of the first egg until the chicks are 3 to 4 weeks old, one or both parents will be present at all times (Tinbergen, 1960). Males perform most territorial defense, females perform most incubation, and both parents feed the chicks until they are at least 6 to 7 weeks old (Burger, 1981; Pierotti, 1981; Tinbergen, 1960). All gulls are strongly monogamous; pair bonds can persist for 10 or more years and usually only are terminated by the death of a mate or failure to reproduce successfully (Tinbergen, 1960). Males may be promiscuous in populations with more females than males (Pierotti, 1981). Herring gull colonies often are found in association with colonies of other species, including other gulls (Bourget, 1973; Brown, 1967). In some nesting colonies, gulls attack chicks of neighboring gulls and other species (Brown, 1967; Schoen and Morris, 1984).

Home range and resources. During the breeding season, herring gulls defend a territory of several tens of square meters around the immediate vicinity of the nest (Burger, 1980b). Their daily foraging range depends on the availability of prey and on the foraging strategy, age, and sex of the gull. Using radiotelemetry on gulls in the Great Lakes, Morris

and Black (1980) demonstrated that some parents with chicks forage at specific locations within 1 km of the colony whereas other parents make extended flights to destinations across a lake more than 30 km away. Similarly, gulls that feed at sea may range tens of kilometers from their nest whereas gulls from the same colony feeding in the intertidal zone may travel less than 1 km (Pierotti and Annett, 1987; 1991). Males typically range farther than females and take larger prey items (Pierotti and Annett, 1987; 1991). At sea during the nonbreeding season, gulls may range hundreds of kilometers during a day (Pierotti, pers. comm.).

Population density. As described above, population density is determined by available nesting space, size of the breeding population, and quality of habitat. Small islands with good feeding areas nearby can have several hundred nests per hectare (Kadlec, 1971; Parsons, 1976b; Pierotti, 1982). In poor quality habitat, some pairs nest solitarily without another nest for several kilometers (Weseloh, 1989).

Population dynamics. Herring gulls and western gulls usually do not begin breeding until at least 4 years of age for males and 5 years of age for females (Burger, 1988; Pierotti, 1981; Pierotti, pers. comm.). Kadlec and Drury (1968) suggest that in a given year, 15 to 30 percent of adults of breeding age do not breed. Most breeding females produce three-egg clutches, but individuals in poor condition may lay only one or two eggs (Parsons, 1976a; Pierotti, 1982; Pierotti and Annett, 1987; 1991). Herring gulls will lay replacement eggs if all or a portion of their original clutch is destroyed (Parsons, 1976a). Hatching success appears to be influenced by female diet, with garbage specialists hatching a smaller percentage of eggs than fish or intertidal (mussel) specialists (Pierotti and Annett, 1987, 1990, 1991). Predation, often by gulls of the same or other species, also contributes to egg losses (Paynter, 1949; Harris, 1964; Davis, 1975). Many herring gull chicks that hatch die before fledging, most within the first 5 days after hatching (Harris, 1964; Kadlec et al., 1969; Brown, 1967). Adult mortality is low (around 10 percent per year), and some birds may live up to 20 years (Brown, 1967; Kadlec and Drury, 1968). Subadult birds exhibit higher mortality (20 to 30 percent per year) (Kadlec and Drury, 1968; Chabrzyk and Coulson, 1976).

Similar species (from general references)

- The western gull (*Larus occidentalis*) (64 cm), found on the Pacific coast of the United States, is the ecological equivalent of the herring gull and is similar in size (53 cm); males range from 1,000 to 1,300 g and females from 800 to 1,000 g (Pierotti, 1981).

- The glaucous gull (*Larus hyperboreus*) is larger (69 cm) than the herring gull and is the predominant gull breeding in the high arctic. Birds from Alaska are slightly smaller than birds from eastern Canada.

- The glaucous-winged gull (*Larus glaucescens*) is similar in size to the herring gull (66 cm) and is the primary breeding species north of the Columbia River. This species hybridizes extensively with the herring gull in Alaska.

- The California gull (*Larus californicus*) is smaller (53 cm) than the herring gull. This species breeds primarily in the Great Basin Desert and winters along the Pacific coast.

- The great black-backed gull (*Larus marinus*) is the largest species of gull (76 cm) in North America and breeds from Labrador to Long Island.

- The ring-billed gull (*Larus delawarensis*) is of average size (45 cm) and is the most common breeding gull in the Great Lakes and northern prairies.

- Franklin's gull (*Larus pipixcan*) is a small (37 cm), summer resident of the Great Plains.

General references

For general information: Harrison (1983); National Geographic Society (1987); Tinbergen (1960); Graham (1975). For discussion of diet: Burger (1988); Fox et al. (1990); Pierotti (1981); Pierotti and Annett (1987).

Herring Gull (*Larus argentatus*)

Factors	Age/Sex Cond./Seas.	Mean	Range or (95% CI of mean)	Location	Reference	Note No.
Body Weight (g)	A F spring	951 ± 88 SD		Lake Huron	Norstrom et al., 1986	
	A M spring	1,184 ± 116 SD				
	A F summer	999 ± 90 SD	832 - 1,274	Newfoundland	Threlfall & Jewer, 1978	
	A M summer	1,232 ± 107 SD	1,014 - 1,618			
	at hatching	65	50 - 80	Maine	Dunn & Brisbin, 1980	
	10 days old	230	120 - 380			
	20 days old	590	420 - 800			
	30 days old	810	610 - 1,000			
	30 days old	964 ± 77 SD		Newfoundland/rocky island	Pierotti, 1982	1
	30 days old	818 ± 99 SD		Newfoundland/grassy island		
Chick Growth Rate (g/day)	< 5 days	8.8 - 13.1		Newfoundland/island	Pierotti, 1982	
	5-30 days	26.3 ± 6.5 SD		Newfoundland/island meadow	Pierotti, 1982	
	5-30 days	33.4 ± 4.7 SD		Newfoundland/rocky island	Pierotti, 1982	
	5-25 days	30.2 ± 1.75 SD	26.7 - 31.4	Maine/coastal island	Hunt, 1972	
Egg Weight (g)	3 egg clutch	87.2		New Brunswick	Herbert & Barclay, 1988	
	2 egg clutch	85.7				
	in 1983	92.0 ± 5.9 SD		Lake Superior, Canada	Meathrel et al., 1987	
	in 1984	98.0 ± 8.0 SD				
Metabolic Rate (kcal/kg-day)	A M basal	86			estimated	2
	A F basal	91				
	A standard	99		laboratory	Lustick et al., 1978	
	A M free-living	233	(84 - 646)			
	A F free-living	248	(92 - 669)		estimated	3
	Also see text for a discussion of annual variation in free-living metabolic rate in herring gulls.					

Herring Gull (*Larus argentatus*)

Factors	Age/Sex Cond./Seas.	Mean	Range or (95% CI of mean)	Location	Reference	Note No.
Food Ingestion Rate (g/g-day)	A M breeding A F breeding	0.20 0.21		Newfoundland - diet of mussels	Pierotti & Annett, 1991	4
	A M breeding A F breeding	0.19 0.18		Newfoundland - diet of garbage	Pierotti & Annett, 1991	5
Water Ingestion Rate (g/g-day)	A M A F	0.055 0.059			estimated	6
Inhalation Rate (m^3/day)	A M A F	0.48 0.41			estimated	7
Surface Area (cm^2)	A M A F	1,150 1,001			estimated	8

Dietary Composition	Summer	Summer	Summer	Summer	Location/Habitat (measure)	Reference	Note No.
months:	Mid-May/ Mid-June	Mid-June/ Mid-July	Mid-July/ Mid-Aug.		Newfoundland/island	Haycock & Threlfall, 1975	
Mytilus edulis	30.9	0.9	9.1		(% occurrence in regurgitations and pellets)		
sea urchin	5.8	0.0	4.5				
fish	11.4	71.1	18.9				
Oceanodroma leuchorhoa	22.4	7.0	15.9				
Fratercula arctica adults	5.8	0.0	1.5				
Fratercula, Uria chicks	0.0	3.5	9.1				
Larus sp. eggs	3.1	0.9	0.8				
Vaccinum angustifolium	-	-	9.9				
Gadus morhua offal	12.4	1.7	14.4				
assorted refuse	5.8	0.9	6.8				

Herring Gull (*Larus argentatus*)

Dietary Composition	Summer	Summer	Summer	Summer	Location/Habitat (measure)	Reference	Note No.
year:	1978	1979	1980	1981	Lake Ontario	Fox et al., 1990	
American smelt	46.1	18.4	61.2	57.8			
alewife	23.1	73.7	16.7	23.4	(% occurrence in		
other fish	20.5	0	3.4	3.1	regurgitations from and		
birds	2.6	2.6	13.8	6.2	stomach contents of		
voles	2.6	2.6	3.4	9.4	incubating adults)		
insects & refuse	12.8	0	3.4	0			
lake:	Ontario	Erie	Huron	Superior	Great Lakes	Fox et al., 1990	
fish	91.8	94.1	75.8	38.6			
insects	5.5	5.9	5.6	42.1	(% occurrence in boli		
offal, garbage	0.5	2.9	13.6	21.0	regurgitated by chicks)		
gull chicks	2.2	0	1.0	0			
adult birds	1.6	0	1.0	3.5			
amphibians	0.5	0	0	0			
earthworms	2.2	0	11.6	1.7			
crayfish	0	0	0.5	0			
snails		3			CA,FL,NY,NJ,TX/	Burger, 1988	
crabs		14			coastal		
garbage		27					
offal		5			(% of gulls feeding on items)		
worms		23					
other inverts.		28			offshore feeding on fish was		
fish		unknown			not included in observations		

Population Dynamics					Reference	Note No.
Foraging Radius (km)	A M A F	10 to 15 5 to 10	3 - 50 3 - 25	NS/coastal	Pierotti, pers. comm.	
Population Density (nests/ha)	summer	227	138 - 350	Massachusetts/coastal islands	Kadlec, 1971	
	summer	217		Newfoundland/island - rocky	Pierotti, 1982	
		75		Newfoundland/island - grassy slope	Pierotti, 1982	

Herring Gull (*Larus argentatus*)

Population Dynamics	Age/Sex/ Cond./Seas.	Mean	Range	Location/Habitat	Reference	Note No.
Clutch Size		2.78	2.51 - 2.90 (over 8 sites)	New Jersey/salt marsh islands	Burger, 1979b	
		2.54	1 - 6 (per nest)	NE United States/coastal	Nisbet & Drury, 1984	
		2.38	2.3 - 2.8 (over 11 years)	Maine/coastal islands	Hunt, 1972	
		2.84 ± 0.44 SD		Lake Superior, Canada/ islands	Meathrel et al., 1987	
Clutches/Year		1	1 - 2*	(* if first eggs lost)	Burger, 1979a; Bourget, 1973	
Days Incubation		30.5 29	28 - 33	Holland/NS Newfoundland/island	Tinbergen, 1960 Pierotti, 1982	9
Age at Fledging (days)		51 43	35 - 44 to 56 - 61 31 to 52	Massachusetts/coastal island New Brunswick/island	Kadlec et al., 1969 Paynter, 1949	
Number Fledge per Active Nest	3 colonies	1.42	1.40 - 1.44	New Jersey/coastal	Burger & Shisler, 1980	
	6 colony-yrs 3 colony-yrs 6 colony-yrs	1.65 1.78 2.19	1.40 - 2.13 1.62 - 2.10 2.16 - 2.25	Lake Ontario/lakeshore Lake Erie/lakeshore Lake Huron/lakeshore	Mineau et al., 1984 (minimum and maximum are yearly means)	
Number Fledge per Successful Nest	3 colonies	1.80	1.79 - 1.80	New Jersey/coastal	Burger & Shisler, 1980	
Age at Sexual Maturity	F M	5 years 4 - 5 years		throughout range/NS	Greig et al., 1983; Pierotti, pers. comm.	
	B	4.3 to 5.8	3 - 8	Scotland/coastal	Coulson et al., 1982	
Annual Mortality Rates (percent)	A B J B A B	8 22 7.3	17 - 33	New England/coastal Scotland/coastal	Kadlec & Drury, 1968 Chabryzk & Coulson, 1976	

Herring Gull (*Larus argentatus*)

Population Dynamics	Age/Sex/ Cond./Seas.	Mean	Range	Location/Habitat	Reference	Note No.
Longevity	A B	10	up to 30 years	NS/NS	Pierotti, pers. comm.	
Seasonal Activity			End	Location	Reference	Note No.
Mating/ Laying	late April early May early May early May	early May mid-May mid-May late May	early June early June mid-June end May	ne shore Lake Superior Maine New Jersey Newfoundland	Morris & Haymes, 1977 Bourget, 1973 Burger, 1977, 1979b Pierotti, 1982	
Hatching	May early June late June	mid - late May June mid-June late June	July end June mid-July	Great Lakes Massachusetts Newfoundland New Brunswick	Fox et al., 1990 Kadlec, 1971 Pierotti, 1982, 1987 Paynter, 1949	
Migration spring fall	February August		late April September	northwestern Atlantic populations	Burger, 1982	
Molt	June	July	August	Newfoundland	Pierotti, pers. comm.	

1 Weight of chicks from first egg laid in 1978 for the rocky island and in 1977 for the grassy area. In some years and some locations, chicks from the first egg were heavier than the rest, and at other times and locations, the first chick was lighter.
2 Estimated using equation 3-29 (Lasiewski and Dawson, 1967) and body weights from Threlfall and Jewer (1978).
3 Estimated using equation 3-38 (Nagy, 1987) and body weights from Threlfall and Jewer (1978).
4 Estimated using 11.2 meals of mussel consumed per day per pair, weight of 80 g per mussel meal of which half is shell and not included in ingestion rate, assuming that the female accounts for 46 percent of pair's energy requirement and the male accounts for 54 percent, and using the body weights of Threlfall and Jewer (1978).
5 Estimated using 4.2 meals of garbage consumed per day per pair, weight of 100 g per garbage meal, assuming that the female accounts for 46 percent of pair's energy requirement and the male accounts for 54 percent, and using the body weights of Threlfall and Jewer (1978).
6 Estimated using equation 3-15 (Calder and Braun, 1983) and body weights from Threlfall and Jewer (1978).
7 Estimated using equation 3-19 (Lasiewski and Calder, 1971) and body weights from Threlfall and Jewer (1978).
8 Estimated using equation 3-21 (Meeh, 1879 and Rubner, 1883, as cited in Walsberg and King, 1978) and body weights from Threlfall and Jewer (1978).
9 Beginning with first egg.

References (including Appendix)

Belopol'skii, L. O. (1957) (Ecology of sea colony birds of the Barents Sea). Translated by: Israel Program for Scientific Translations, Jerusalem (cited in Dunning, 1984).

Bourget, A. A. (1973) Relation of eiders and gulls nesting in mixed colonies in Penobscot Bay, Maine. Auk 90: 809-820.

Brown, R. G. (1967) Breeding success and population growth in a colony of herring gulls and lesser black-backed gulls *Larus argentatus* and *L. fuscus*. Ibis 109: 502-515.

Burger, J. (1977) Nesting behavior of herring gulls: invasion into *Spartina* salt marsh areas of New Jersey. Condor 79: 162-169.

Burger, J. (1979a) Competition and predation: herring gulls versus laughing gulls. Condor 81: 269-277.

Burger, J. (1979b) Colony size: a test for breeding synchrony in herring gull (*Larus argentatus*) colonies. Auk 96: 694-703.

Burger, J. (1980a) Nesting adaptation of herring gull (*Larus argentatus*) to salt marshes and storm tides. Biol. Behav. 5: 147-162.

Burger, J. (1980b) Territory size differences in relation to reproductive stage and type of intruder in herring gulls (*Larus argentatus*). Auk 97: 733-741.

Burger, J. (1981) On becoming independent in herring gulls: parent-young conflict. Am. Nat. 117: 444-456.

Burger, J. (1982) Herring gull. In: Davis, D. E., ed. CRC handbook of census methods for terrestrial vertebrates. Boca Raton, FL: CRC Press; pp. 76-79.

Burger, J. (1988) Foraging behavior in gulls: differences in method, prey, and habitat. Colonial Waterbirds 11: 9-23.

Burger, J.; Gochfeld, M. (1981) Age-related differences in piracy behavior of four species of gulls, *Larus*. Behaviour 77: 242-267.

Burger, J.; Gochfeld, M. (1983) Behavior of nine avian species at a Florida garbage dump. Colonial Waterbirds 6: 54-63.

Burger, J.; Shisler, J. (1980) The process of colony formation among herring gulls *Larus argentatus* nesting in New Jersey. Ibis 122: 15-16.

Calder, W. A.; Braun, E. J. (1983) Scaling of osmotic regulation in mammals and birds. Am. J. Physiol. 244: R601-R606.

Chabrzyk, G.; Coulson, J. C. (1976) Survival and recruitment in the herring gull *Larus argentatus*. J. Anim. Ecol. 45: 187-203.

Chapman, B.-A.; Parker, J. W. (1985) Foraging areas, techniques, and schedules of wintering gulls on southeastern Lake Erie. Colonial Waterbirds 8: 135-141.

Coulson, J. C.; Duncan, N.; Thomas, C. (1982) Changes in the breeding biology of the herring gull (*Larus argentus*) induced by reduction in size and density of the colony. J. Anim. Ecol. 51: 739-756.

Coulson, J. C.; Monaghan, P.; Butterfield, J.; et al. (1983) Seasonal changes in the herring gull in Britain: weight, moult and mortality. Ardea 71: 235-244.

Davis, J. W. (1975) Age, egg-size and breeding success in the herring gull *Larus argentatus*. Ibis 117: 460-473.

Drury, W. H., Jr. (1965) Clash of coastal nesters. MA: Audubon.

Dunn, E. H. (1976) The development of endothermy and existence energy expenditure in herring gull chicks. Condor 78: 493-498.

Dunn, E. H. (1980) On the variability in energy allocation of nestling birds. Auk 1: 19-27.

Dunn, E. H.; Brisbin, I. L. (1980) Age-specific changes in the major body components and caloric values of herring gull chicks. Condor 82: 398-401.

Dunning, J. B., Jr. (1984) Body weights of 686 species of North American birds. Western Bird Banding Association, Monograph No. 1. Cave Creek, AZ: Eldon Publishing.

Ellis, H. I. (1984) Energetics of free-ranging seabirds. In: Whittow, G. C.; Rhan, H., eds. Seabird energetics. New York, NY: Plenum Press; pp. 203-234.

Erwin, R. M. (1971) The breeding success of two species of sympatric gulls, the herring gull and the great black-backed gull. Wilson Bull. 83: 152-158.

Ewins, P. J.; Weseloh, D. V.; Groom, J. H.; et al. (unpublished 1991) The diet of herring gulls (*Larus argentatus*) during winter and early spring on the lower Great Lakes (unpublished manuscript, Canadian Wildlife Service, Burlington, Ontario).

Fox, G. A.; Allan, L. J.; Weseloh, D. V., et al. (1990) The diet of herring gulls during the nesting period in Canadian waters of the Great Lakes. Can. J. Zool. 68: 1075-1085.

Graham, F. (1975) Gulls: a social history. New York, NY: Random House.

Greig, S. A.; Coulson, J. C.; Monaghan, P. (1983) Age-related differences in foraging success in the herring gull (*Larus argentatus*). Anim. Behav. 31: 1237-1243.

Greig, S. A.; Coulson, J. C.; Monaghan, P. (1985) Feeding strategies of male and female adult herring gulls *Larus argentatus*. Behaviour 94: 41-59.

Gross, A. O. (1940) The migration of Kent Island herring gulls. Bird-Banding 11: 129-155.

Harris, M. P. (1964) Aspects of the breeding biology of the gulls: *Larus argentatus*, *L. fuscus*, and *L. marinus*. Ibis 106: 432-456.

Harris, M. P. (1970) Rates and causes of increases of some British gull populations. Bird Study 17: 325-335.

Harrison, P. (1983) Seabirds: an identification guide. Boston, MA: Houghton-Mifflin Co.

Haycock, K. A.; Threlfall, W. (1975) The breeding biology of the herring gull in Newfoundland. Auk 92: 678-697.

Hebert, P. N.; Barclay, R. M. (1986) Asynchronous and synchronous hatching: effect on early growth and survivorship of herring gull, *Larus argentatus*, chicks. Can. J. Zool. 64: 2357-2362.

Hebert, P. N.; Barclay, R. M. (1988) Parental investment in herring gulls: clutch apportionment and chick survival. Condor 90: 332-338.

Holley, A. J. (1982) Post-fledging interactions on the territory between parents and young herring gulls *Larus argentatus*. Ibis 124: 198-203.

Hunt, G. L. (1972) Influence of food distribution and human disturbance on the reproductive success of herring gulls. Ecology 53: 1051-1061.

Kadlec, J. A. (1971) Effects of introducing foxes and raccoons on herring gull colonies. J. Wildl. Manage. 35: 625-636.

Kadlec, J. A. (1976) A re-evaluation of mortality rates in adult herring gulls. Bird-Banding 47: 8-12.

Kadlec, J. A.; Drury, W. H. (1968) Structure of the New England herring gull population. Ecology 49: 644-676.

Kadlec, J. A.; Drury, W. H.; Onion, D. K. (1969) Growth and mortality of herring gull chicks. Bird-Banding 40: 222-233.

Keith, J. A. (1966) Reproduction in a population of herring gulls (*Larus argentatus*) contaminated by DDT. J. Appl. Ecol. 3(suppl.): 57-70.

Lasiewski, R. C.; Calder, W. A. (1971) A preliminary allometric analysis of respiratory variables in resting birds. Resp. Phys. 11: 152-166.

Lasiewski, R. C.; Dawson, W. R. (1967) A reexamination of the relation between standard metabolic rate and body weight in birds. Condor 69: 12-23.

Lustick, S.; Battersby, B.; Kelty, M. (1978) Behavioral thermoregulation: orientation toward the sun in herring gulls. Science 200: 81-83.

Lustick, S.; Battersby, B.; Kelty, M. (1979) Effects of insolation on juvenile herring gull energetics and behavior. Ecology 60: 673-678.

MacLean, A. A. (1986) Age-specific foraging ability and the evolution of deferred breeding in three species of gulls. Wilson Bull. 98: 267-279.

McCleery, R. H.; Sibley, R. M. (1986) Feeding specialization and preference in herring gulls. J. Anim. Ecol. 55: 245-259.

Meathrel, C. E.; Ryder, J. P.; Termaat, B. M. (1987) Size and composition of herring gull eggs: relationship to position in the laying sequence and the body condition of females. Colonial Waterbirds 10: 55-63.

Meeh, K. (1879) Oberflachenmessungen des mensclichen Korpers. Z. Biol. 15: 426-458.

Mendall, H. L. (1939) Food habits of the herring gull in relation to freshwater game fishes in Maine. Wilson Bull. 41: 223-226.

Mineau, P.; Fox, G. A.; Norstrom, R. J.; et al. (1984) Using the herring gull to monitor levels and effects of organochlorine contamination in the Canadian Great Lakes. In: Nriagu, J. O.; Simmons, M. S., eds. Toxic contaminants in the Great Lakes. New York, NY: John Wiley & Sons; pp. 425-452.

Moore, F. R. (1976) The dynamics of seasonal distribution of Great Lakes herring gulls. Bird-Banding 47: 141-159.

Morris, R. D.; Black, J. E. (1980) Radiotelemetry and herring gull foraging patterns. J. Field Ornithol. 51: 110-118.

Morris, R. D.; Haymes, G. T. (1977) The breeding biology of two Lake Erie herring gull colonies. Can. J. Zool. 55: 796-805.

Nagy, K. A. (1987) Field metabolic rate and food requirement scaling in mammals and birds. Ecol. Monogr. 57: 111-128.

National Geographic Society. (1987) Field guide to the birds of North America. Washington, DC: National Geographic Society.

Niebuhr, V. (1983) Feeding strategies and incubation behavior of wild herring gulls: an experiment using operant feeding boxes. Anim. Behav. 31: 708-717.

Nisbet, I. C.; Drury, W. H. (1984) Super-normal clutches in herring gulls in New England. Condor 86: 87-89.

Norstrom, R. J.; Clark, T. P.; Kearney, J. P.; et al. (1986) Herring gull energy requirements and body constituents in the Great Lakes. Ardea 74: 1-23.

Olsson, V. (1958) Dispersal, migration, longevity and death causes of *Strix aluco, Buteo buteo, Ardea cinerea* and *Larus argentatus.* A study based on recoveries of birds ringed in Fenno-Scandia. Acta Vertebratica 1: 91-189.

Parsons, J. (1972) Egg size, laying date and incubation period in the herring gull. Ibis 114: 536-541.

Parsons, J. (1976a) Factors determining the number and size of eggs laid by the herring gull. Condor 78: 481-482.

Parsons, J. (1976b) Nesting density and breeding success in the herring gull *Larus argentatus.* Ibis 118: 537-546.

Patton, S. R. (1988) Abundance of gulls at Tampa Bay landfills. Wilson Bull. 100: 431-442.

Paynter, R. A. (1949) Clutch size and the egg and chick mortality of Kent Island herring gulls. Ecology 30: 146-166.

Pierotti, R. (1981) Male and female parental roles in the western gull under different environmental conditions. Auk 98: 532-549.

Pierotti, R. (1982) Habitat selection and its effect on reproductive output in the herring gull in Newfoundland. Ecology 63: 854-868.

Pierotti, R. (1987) Behavioral consequences of habitat selection in the herring gull. Studies Avian Biol. 10: 119-128.

Pierotti, R. (1988) Associations between marine birds and mammals in the northwest Atlantic Ocean. In: Burger, J., ed. Seabirds and other marine vertebrates. New York, NY: Columbia University Press; pp. 31-58.

Pierotti, R.; Annett, C. (1987) Reproductive consequences of dietary specialization and switching in an ecological generalist. In: Kamil, A. C.; Krebs, J.; Pulliam, H. R., eds. Foraging behavior. New York, NY: Plenum Press; pp. 417-442.

Pierotti, R.; Annett, C. A. (1990) Diet and reproductive output in seabirds: food choices by individual, free-living animals can affect survival of offspring. BioSci. 40: 568-574.

Pierotti, R.; Annett, C. A. (1991) Diet choice in the herring gull: constraints imposed by reproductive and ecological factors. Ecology 72: 319-328.

Poole, E. L. (1938) Weights and wing areas in North American birds. Auk 55: 511-517.

Powers, K. D. (1983) Pelagic distributions of marine birds off the northeastern U.S. NOAA, Tech. Mem. NMFS-F/NED-27: 1-201.

Rubner, M. (1883) Uber den Einfluss der Korpergrosse auf Stoff- und Kraftweschsel. Z. Biol. 19: 535-562.

Schoen, R. B.; Morris, R. D. (1984) Nest spacing, colony location, and breeding success in herring gulls. Wilson Bull. 96: 483-488.

Sibly, R. M.; McCleery, R. H. (1983) Increase in weight of herring gulls while feeding. J. Anim. Ecol. 52: 35-50.

Smith, W. J. (1959) Movements of Michigan herring gulls. Bird-Banding 30: 69-104.

Threlfall, W.; Jewer, D. D. (1978) Notes on the standard body measurements of two populations of herring gulls (*Larus argentatus*). Auk 95: 749-753.

Tinbergen, N. (1960) The herring gull's world. New York, NY: Harper and Row, Publishers.

Verbeek, N. A. (1977) Comparative feeding behavior of immature and adult herring gulls. Wilson Bull. 89: 415-421.

Vermeer, K. (1973) Food habits and breeding range of herring gulls in the Canadian prairie provinces. Condor 75: 478-480.

Walsberg, G. E.; King, J. R. (1978) The relationship of the external surface area of birds to skin surface area and body mass. J. Exp. Biol. 76: 185-189.

Weseloh, D. H. (1989) Herring gull. In: Cadman, M. D.; Eagles, P. F.; Helleiner, F. M., eds. Atlas of the breeding birds of Ontario. Waterloo, University of Waterloo Press; pp. 182-183.

Weseloh, D. V.; Mineau, P.; Struger, J. (1990) Geographical distribution of contaminants and productivity measures of herring gulls in the Great Lakes: Lake Erie and connecting channels 1978/79. Sci. Tot. Environ. 91: 141-159.

2.1.13. Belted Kingfisher (kingfishers)

Order *Coraciiformes*, Family *Alcedinidae*. Kingfishers are stocky, short-legged birds with large heads and bills. They exist on a diet mostly of fish, which they catch by diving, from a perch or the air, head first into the water. They nest in burrows in earthen banks that they dig using their bills and feet.

Selected species

The belted kingfisher (*Ceryle alcyon*, formerly *Megaceryle alcyon*) is a medium-sized bird (33 cm bill tip to tail tip) that eats primarily fish. It is one of the few species of fish-eating birds found throughout inland areas as well as coastal areas. The belted kingfisher's range includes most of the North American continent; it breeds from northern Alaska and central Labrador southward to the southern border of the United States (Bent, 1940). Two subspecies sometimes are recognized: the eastern belted kingfisher (*Ceryle alcyon alcyon*), which occupies the range east of the Rocky Mountains and north to Quebec, and the western belted kingfisher (*Cercyle alcyon caurina*), which occupies the remaining range to the west (Bent, 1940).

Body size. The sexes are similar in size and appearance, although the female tends to be slightly larger (Salyer and Lagler, 1946). Bent (1940) reported that western populations are somewhat larger than eastern ones. Nestlings reach adult body weight by about 16 days after hatching, but then may lose some weight before fledging (Hamas, 1981).

Habitat. Belted kingfishers are typically found along rivers and streams and along lake and pond edges (Hamas, 1974). They are also common on seacoasts and estuaries (Bent, 1940). They prefer waters that are free of thick vegetation that obscures the view of the water and water that is not completely overshadowed by trees (Bent, 1940; White, 1953). Kingfishers also require relatively clear water in order to see their prey and are noticeably absent in areas when waters become turbid (Bent, 1940; Davis, 1982; Salyer and Lagler, 1946). White (1953) suggested that water less than 60 cm deep is preferred. They prefer stream riffles for foraging sites even when pools are more plentiful because of the concentration of fish at riffle edges (Davis, 1982). Belted kingfishers nest in burrows within steep earthen banks devoid of vegetation beside rivers, streams, ponds, and lakes; they also have been found to nest in slopes created by human excavations such as roadcuts and landfills (Hamas, 1974). Sandy soil banks, which are easy to excavate and provide good drainage, are preferred (Brooks and Davis, 1987; Cornwell, 1963; White, 1953). In general, kingfishers nest near suitable fishing areas when possible but will nest away from water and feed in bodies of water other than the one closest to home (Cornwell, 1963).

Food habits. Belted kingfishers generally feed on fish that swim near the surface or in shallow water (Salyer and Lagler, 1946; White, 1953; Cornwell, 1963). Davis (pers. comm. in Prose, 1985) believes that these kingfishers generally catch fish only in the upper 12 to 15 cm of the water column. Belted kingfishers capture fish by diving either from a perch overhanging the water or after hovering above the water (Bent, 1940). Fish

are swallowed whole, head first, after being beaten on a perch (Bent, 1940). The average length of fish caught in a Michigan study was less than 7.6 cm but ranged from 2.5 to 17.8 cm (Salyer and Lagler, 1946); Davis (1982) found fish caught in Ohio streams to range from 4 to 14 cm in length. Several studies indicate that belted kingfishers usually catch the prey that are most available (White, 1937, 1953; Salyer and Lagler, 1946; Davis, 1982). Diet therefore varies considerably among different water bodies and with season (see examples in Appendix). Although kingfishers feed predominantly on fish, they also sometimes consume large numbers of crayfish (Davis, 1982; Sayler and Lagler, 1946), and in shortages of their preferred foods, have been known to consume crabs, mussels, lizards, frogs, toads, small snakes, turtles, insects, salamanders, newts, young birds, mice, and berries (Bent, 1940). Parents bring surprisingly large fish to their young. White (1953) found that nestlings only 7 to 10 days old were provided fish up to 10 cm long, and nestlings only 2 weeks old were provided with fish up to 13 cm in length. After fledging, young belted kingfishers fed on flying insects for their first 4 days after leaving the nest, crayfish for the next week, and by the 18th day post-fledging, could catch fish (Salyer and Lagler, 1946).

Molt. The juvenile plumage is maintained through the winter, and young birds undergo their first prenuptial molt in the spring (between February and April) involving most of the body plumage (Bent, 1940). Adults have a complete postnuptial molt in the fall (August to October) (Bent, 1940).

Migration. This kingfisher breeds over most of the area of North America and winters in most regions of the continental United States (National Geographic Society, 1987). Although most northern kingfishers migrate to southern regions during the coldest months, some may stay in areas that remain ice-free where fishing is possible (Bent, 1940).

Breeding activities and social organization. During the breeding season, pairs establish territories for nesting and fishing (Davis, 1982); otherwise, belted kingfishers are solitary. They are not colonial nesters and will defend an unused bank if it lies within their territory (Davis, 1982). In migrating populations, the males arrive before the females to find suitable nesting territories (Davis, 1982). Kingfishers excavate their burrows in earthen banks, forming a tunnel that averages 1 to 2 m in length, although some burrows may be as long as 3 to 4 m (Hamas, 1981; Prose, 1985). The burrow entrance is usually 30 to 90 cm from the top of the bank (Bent, 1940; White, 1953) and at least 1.5 m from the base (Cornwell, 1963). Burrows closer to the top may collapse, and burrows too low may flood (Brooks and Davis, 1987). Burrows may be used for more than one season (Bent, 1940). Five to seven eggs are laid on bare substrate or on fish bones within the burrow (Hamas, 1981; White, 1953). Only one adult, usually the female, spends the night in the nest cavity; males usually roost in nearby forested areas or heavy cover (Cornwell, 1963). Both parents incubate eggs and feed the young (Bent, 1940). After fledging, the young remain with their parents for 10 to 15 days (Sayler and Lagler, 1946).

Home range and resources. During the breeding season, belted kingfishers require suitable nesting sites with adequate nearby fishing. During spring and early summer, both male and female belted kingfishers defend a territory that includes both their nest site and their foraging area (Davis, 1982). By autumn, each bird (including the young of the year)

defends an individual feeding territory only (Davis, 1982). The breeding territories (length of waterline protected) can be more than twice as long as the fall and winter feeding territories, and stream territories tend to be longer than those on lakes (Davis, 1982; Salyer and Lagler, 1946). Foraging territory size is inversely related to prey abundance (Davis, 1982).

Population density. Breeding densities of between two and six pairs per 10 km of river shoreline have been recorded, with density increasing with food availability (Brooks and Davis, 1987; White, 1936).

Population dynamics. Kingfishers are sensitive to disturbance and usually do not nest in areas near human activity (White, 1953; Cornwell, 1963). Kingfishers typically breed in the first season after they are born (Bent, 1940). Fledging success depends on food availability, storms, floods, predation, and the integrity of the nest burrow but can be as high as 97 percent (M. J. Hamas, pers. comm.). Dispersal of young occurs within a month of fledging (White, 1953). No data concerning annual survivorship rates were found.

Similar species (from general references)

- The green kingfisher (*Chloroceryle americana*) is smaller (22 cm) than the belted kingfisher and is only common in the lower Rio Grande Valley. It also is found in southeastern Arizona and along the Texas coast, usually during fall and winter.

- The ringed kingfisher (*Ceryle torquata*) is larger (41 cm) and resides in the lower Rio Grande Valley in Texas and Mexico.

General references

Bent (1940); Fry (1980); National Geographic Society (1987); Prose (1985); White (1953).

Belted Kingfisher (*Ceryle alcyon*)

Factors	Age/Sex/ Cond./Seas.	Mean	Range or (95% CI of mean)	Location or subspecies	Reference	Note No.
Body Weight (g)	A B	148 ± 20.8 SD	125 - 215	Pennsylvania	Powdermill Nature Center (unpubl.)	1
	A B	136 ± 15.6 SE		Pennsylvania	Brooks & Davis, 1987	
	A B	158 ± 11.5 SE		Ohio	Brooks & Davis, 1987	
	at hatching	10 - 12		Minnesota	Hamas, 1981	
	at fledging	148 ± 13.3 SE		Pennsylvania	Brooks & Davis, 1987	
	at fledging	169 ± 11.9 SE		Ohio	Brooks & Davis, 1987	
Nestling Growth Rate (g/day)		5 to 6		Pennsylvania, Ohio/streams	Brooks & Davis, 1987	2
Metabolic Rate (kcal/kg-day)	A B basal	132			estimated	3
	A B free-living	327	(154 - 693)		estimated	4
Food Ingestion Rate (g/g-day)	A B	0.50		northcentral lower Michigan	Alexander, 1977	5
	nestlings		1.0 - 1.75	Nova Scotia	White, 1936	
Water Ingestion Rate (g/g-day)	A B	0.11			estimated	6
Inhalation Rate (m^3/day)	A B	0.094			estimated	7
Surface Area (cm^2)	A B	280			estimated	8

Belted Kingfisher (*Ceryle alcyon*)

Dietary Composition	Spring	Summer	Fall	Winter	Location/Habitat (measure)	Reference	Note No.
trout		17*			lower Michigan/lake	Alexander, 1977	
non-trout fish		29					
crustacea		5			(% wet weight; stomach contents)		
insects		19					
amphibians		27					
birds and mammals		1			*data from spring and fall also		
unidentified		2					
trout		30			Michigan/trout streams	Salyer & Lagler, 1946	
other game & pan fish (e.g., perch, centrarchids)		13			(% wet volume; stomach contents)		
forage fish (e.g., minnow, stickleback, sculpins)		15					
unidentified fish		1					
crayfish		41					
insects		< 1					
salmon fry		11			Nova Scotia/riparian - streams (% of total number of prey; fecal pellets)	White, 1936	
salmon (1-yr-old)		42					
salmon (2-yr-old)		1					
trout		15					
sticklebacks		30					
killifish		< 1					
suckers		< 1					
crayfish		13			southwest Ohio/creek	Davis, 1982	
cyprinids		76					
(minnows)		(13)			(% of total number of prey brought to nestlings)		
(stonerollers)		(38)					
(unidentified)		(26)					
other fish		10					

Belted Kingfisher (*Ceryle alcyon*)

Population Dynamics	Age/Sex/ Cond./Seas.	Mean	Range	Location/Habitat	Reference	Note No.
Territory Size (km shoreline)	early summer - breeding pairs:	2.19 ± 0.56 SE		Pennsylvania/streams	Brooks & Davis, 1987	
		1.03 ± 0.28 SE		Ohio/streams	Brooks & Davis, 1987	
	late summer - nonbreeding individuals:	1.03 ± 0.22 SE		southwest Ohio/streams	Davis, 1980	
		0.39 ± 0.093 SE		southwest Ohio/streams	Davis, 1980	
Population Density (pair/km shore)	A B summer	0.11 - 0.19		Pennsylvania/streams	Brooks & Davis, 1987	
	A B summer	0.6		Nova Scotia/streams	White, 1936	
Clutch Size		5.8 ± 0.7 SE		Pennsylvania/streams	Brooks & Davis, 1987	
		6.8 ± 0.4 SE		Ohio/streams	Brooks & Davis, 1987	
Clutches/Year		1		Pennsylvania, Ohio/streams	Brooks & Davis, 1987	9
		1		Minnesota/lake	Hamas, 1975	
Days Incubation		22		Minnesota/lake	Hamas, 1975	
Age at Fledging		28 days		NS/NS	Bent, 1940	
Number Fledge per Active Nest		4.5 ± 1.9 SE		Pennsylvania/streams	Brooks & Davis, 1987	
		5.3 ± 2.2 SE		Ohio/streams	Brooks & Davis, 1987	
Age at Sexual Maturity		1 year		throughout range	Bent, 1940	

Belted Kingfisher (*Ceryle alcyon*)

Seasonal Activity	Begin	Peak	End	Location	Reference	Note No.
Mating	April	April to May	early July	Minnesota	Hamas, 1975	
	May	June early June	late July	Minnesota Nova Scotia	Hamas, 1975 White, 1936	
	August February		October April	NS NS	Bent, 1940 Bent, 1940	
			mid-October mid-November mid-December	Maine NY, SD, WI, NE Massachusetts, New Jersey	Bent, 1940 Bent, 1940 Bent, 1940	
	late February mid-March early April			PA, RI, MO NY, CT, IL, WI Maine, Nova Scotia	Bent, 1940 Bent, 1940 Bent, 1940	

1 Cited in Dunning (1984).
2 Brooks and Davis (1987) reported fledging weights of 149 and 169 g for two populations. Given a hatching weight of about 10 g and 28 days required to fledge, on average, chicks must gain 5 to 6 g per day. Hamas (1981) found gains of approximately 8.5 g per day until day 18, and a loss of approximately 4.5 g per day until fledging.
3 Estimated using equation 3-28 (Lasiewski and Dawson, 1967) and body weights from Powdermill Nature Center (unpubl.).
4 Estimated using equation 3-37 (Nagy, 1987) and body weights from Powdermill Nature Center (unpubl.).
5 Estimated by author.
6 Estimated using equation 3-15 (Calder and Braun, 1983) and body weights from Powdermill Nature Center (unpubl.).
7 Estimated using equation 3-19 (Lasiewski and Calder, 1971) and body weights from Powdermill Nature Center (unpubl.).
8 Estimated using equation 3-21 (Meeh, 1879 and Rubner, 1883, as cited in Walsberg and King, 1978) and body weights from Powdermill Nature Center (unpubl.).
9 They are known to renest up to three times if clutches are lost early (Bent, 1940).

References (including Appendix)

Alexander, G. R. (1974) The consumption of trout by bird and mammal predators on the North Branch Au Sable River. Michigan Dept. Nat. Resources, Dingell - Johnson Proj.; F-30-R, Final Report.

Alexander, G. R. (1977) Food of vertebrate predators on trout waters in north central lower Michigan. Michigan Academician 10: 181-195.

Bent, A. C. (1940) Life histories of North American cuckoos, goat suckers, hummingbirds, and their allies. Washington, DC: U.S. Government Printing Office; Smithsonian Inst. US Nat. Mus., Bull. 176.

Brooks, R. P.; Davis, W. J. (1987) Habitat selection by breeding belted kingfishers (*Ceryle alcyon*). Am. Midl. Nat. 117: 63-70.

Calder, W. A.; Braun, E. J. (1983) Scaling of osmotic regulation in mammals and birds. Am. J. Physiol. 244: R601-R606.

Cornwell, G. W. (1963) Observations on the breeding biology and behavior of a nesting population of belted kingfishers. Condor 65: 426-431.

Davis, W. J. (1980) The belted kingfisher, *Megaceryle alcyon*: its ecology and territoriality [master's thesis]. Cincinnati, OH: University of Cincinnati.

Davis, W. J. (1982) Territory size in *Megaceryle alcyon* along a stream habitat. Auk 99: 353-362.

Dunning, J. B., Jr. (1984) Body weights of 686 species of North American birds. Western Bird Banding Association, Monograph No. 1. Cave Creek, AZ: Eldon Publishing.

Fry, C. (1980) The evolutionary biology of kingfishers (*Alcedinidae*). In: The living bird, 1979-80. Ithaca, NY: The Laboratory of Ornithology, Cornell University; pp. 113-160.

Hamas, M. J. (1974) Human incursion and nesting sites of the belted kingfisher. Auk 91: 835-836.

Hamas, M. J. (1975) Ecological and physiological adaptations for breeding in the belted kingfisher (*Megaceryle alcyon*) [Ph.D. dissertation]. Duluth, MN: University of Minnesota.

Hamas, M. J. (1981) Thermoregulatory development in the belted kingfisher. Comp. Biochem. Physiol. A: Comp. Physiol. 69: 149-152.

Lasiewski, R. C.; Calder, W. A. (1971) A preliminary allometric analysis of respiratory variables in resting birds. Resp. Phys. 11: 152-166.

Lasiewski, R. C.; Dawson, W. R. (1967). A reexamination of the relation between standard metabolic rate and body weight in birds. Condor 69: 12-23.

Meeh, K. (1879) Oberflachenmessungen des mensclichen Korpers. Z. Biol. 15: 426-458.

Nagy, K. A. (1987) Field metabolic rate and food requirement scaling in mammals and birds. Ecol. Monogr. 57: 111-128.

National Geographic Society. (1987) Field guide to the birds of North America. Washington, DC: National Geographic Society.

Poole, E. L. (1938) Weights and wing areas in North American birds. Auk 55: 511-517.

Prose, B. L. (1985) Habitat suitability index models: belted kingfisher. U.S. Fish Wildl. Serv. Biol. Rep. 82(10.87).

Rubner, M. (1883) Uber den Einfluss der Korpergrosse auf Stoff- und Kraftweschsel. Z. Biol. 19: 535-562.

Salyer, J. C.; Lagler, K. F. (1946) The eastern belted kingfisher, *Megaceryle alcyon alcyon* (Linnaeus), in relation to fish management. Trans. Am. Fish. Soc. 76: 97-117.

Walsberg, G. E.; King, J. R. (1978) The relationship of the external surface area of birds to skin surface area and body mass. J. Exp. Biol. 76: 185-189.

White, H. C. (1936) The food of kingfishers and mergansers on the Margaree River, Nova Scotia. J. Biol. Board Can. 2: 299-309.

White, H. C. (1937) Local feeding of kingfishers and mergansers. J. Biol. Board Can. 3: 323-338.

White, H. C. (1938) The feeding of kingfishers: food of nestlings and effect of water height. J. Biol. Board 4: 48-52.

White, H. C. (1953) The eastern belted kingfisher in the maritime provinces. Fish. Res. Board Can. Bull. 97.

2.1.14. Marsh Wren (wrens)

Order *Passeriformes*, Family *Troglodytidae*. Wrens are small insectivorous birds that live in a variety of habitats throughout the United States. They have long, slender bills adapted for gleaning insects from the ground and vegetation. Most species are migratory, although some populations are year-round residents.

Selected species

The marsh wren (*Cistothorus palustris*) is a common bird inhabiting freshwater cattail marshes and salt marshes. Marsh wrens breed throughout most of the northern half of the United States and in coastal areas as far south as Florida; they winter in the southern United States and into Mexico, particularly in coastal areas. Marsh wrens eat mostly insects, and occasionally snails, which they glean from the surface of vegetation. This species was formerly known as the long-billed marsh wren (*Telmatodytes palustris*).

Body size. Although wrens are small (13 cm bill tip to tail tip; about 10 g body weight), males tend to be about 10 percent heavier than females (see table). Body weight varies seasonally; in Georgia, where marsh wrens are resident throughout the year, they tend to be heavier in the spring and summer than in the fall and winter (Kale, 1965).

Habitat. Marsh wrens inhabit freshwater and saltwater marshes, usually nesting in association with bulrushes, cattails, and sedges or on occasion in mangroves (Welter, 1935; Bent, 1948; Kale, 1965; Verner, 1965). Standing water from several centimeters to nearly a meter is typical of the areas selected (Bent, 1948). Permanent water is necessary to provide a food supply of insects necessary to maintain the birds and as a defense against predation (Verner and Engelsen, 1970). Deeper water and denser vegetation are associated with reduced predation rates (Leonard and Picman, 1987).

Food habits. Marsh wrens consume aquatic invertebrates, other insects, and spiders, which they glean from the water surface, on stems and leaves of emergent vegetation, and the marsh floor (Kale, 1965; Welter, 1935). They sometimes also feed by flycatching (Welter, 1935). The insect orders most commonly taken include Coleoptera (both adults and larvae), Diptera (adults and larvae), Hemiptera (juveniles and adults), Lepidoptera (larvae most commonly fed to nestlings); and Odonata (newly emerged) (Bent, 1948; Kale, 1964). When feeding the young, at first the parents bring mosquito adults and larvae, midges, larval tipulids, and other small insects (Welter, 1935). As the young mature, the parents bring larger insects such as ground beetles, diving beetles, long-horned beetles, caterpillars, dragonflies, and sawflies to the nestlings (Welter, 1935). In a population in Georgia, spiders (usually 1 to 3 mm in size, sometimes 12 to 15 mm), small crabs (5 to 7 mm), small snails (1 to 3 mm), and insect eggs also were consumed and fed to nestlings (Kale, 1965). Thus, organisms that are aquatic for all or part of their lives are an important component of the diet of marsh wren adults and nestlings.

Migration. Marsh wrens are year-round residents in some southern and coastal maritime regions where marshes do not freeze. Most migratory wrens breed throughout the northern half of the United States through southern Canada and winter in Mexico and

the southern half of the United States (Bent, 1948; Verner, 1965; American Ornthologists' Union, 1983; National Geographic Society, 1987).

Breeding activities and social organization. Many populations of marsh wren are polygynous, with some males mating with two, occasionally three, females in a season, while the remaining males have one mate or remain bachelors. For example, Leonard and Picman (1987) found 5 to 11 percent bachelor males, 41 to 48 percent monogamous males, 37 to 43 percent bigamous males, and 5 to 12 percent trigamous males in two marshes in Manitoba, Canada. Similarly, Verner and Engelsen (1970) found 16 percent bachelors, 57 percent monogamous, and 25 percent bigamous males in eastern Washington state. In contrast, Kale (1965) found most males to be monogamous through 4 years of study in Georgia.

Males arrive at the breeding marshes before the females to establish territories that include both nest sites and foraging areas (Kale, 1965; Verner, 1965; Welter, 1935). Males build several nests in their territories throughout the breeding season (Kale, 1965; Verner, 1965). The female usually only adds lining material to a nest of her choice, although some may help construct the breeding nest (Kale, 1965). Breeding nests are oblong in shape, with a side opening, and are woven of cattails, reeds, and grasses and lashed to standing vegetation, generally 30 cm to 1 m above standing water or high tide (Bent, 1948; Verner, 1965). Incubation lasts approximately 2 weeks, as does the nestling period (Kale, 1965; Verner, 1965). After fledging, one or both parents continue to feed the young for about 12 days (Verner, 1965). Many populations typically rear two broods per year, although some may rear three (Kale, 1965; Verner, 1965). In the more monogamous populations, both parents regularly feed young, but in the more polygynous ones, the females may provide most of the food, with males assisting only toward the end of the nestling period (Leonard and Picman, 1988; Verner, 1965).

Home range and resources. Marshes smaller than 0.40 ha usually are not used by breeding marsh wrens (Bent, 1948). Average male territory size for a given year and location can range from 0.006 to 0.17 ha, depending on the habitat and conditions of the year (see table). Also, there is a trend in polygynous populations for polygynous males to defend larger territories than monogamous males or males that end up as bachelors (Verner and Engelson, 1970; Verner, 1964; Kale, 1965).

Population density. Because the species is polygynous, there may be more females than males inhabiting breeding marshes. Population density varies with the suitability and patchiness of the habitat. Densities as high as 120 adult birds per hectare have been recorded (Kale, 1965).

Population dynamics. Clutch size and number of clutches per year vary with latitude and climate (see table). In some populations, marsh wrens commonly destroy eggs and kill the nestlings of other pairs of their own species and other marsh-nesting passerines (Orians and Wilson, 1964; Picman, 1977; Welter, 1935). Fledging success depends strongly on nest location; nests over deeper water are less vulnerable to predation (Leonard and Picman, 1987). Of nests lost to all causes, Leonard and Picman (1987) found 44 percent due to mammalian predators, 27 percent due to other wrens, 11 percent due to weather, 8 percent due to nest abandonment, and 13 percent unknown. The

annual mortality of adults is lower than that of first-year birds. Both sexes of this species usually commence breeding in the first year following hatching (Kale, 1965).

Similar species

- The sedge wren (*Cistothorus platensis*, formerly known as the short-billed marsh wren) nests locally in wet meadows or shallow sedge marshes and hayfields in the northeastern United States, wintering primarily in the southeastern United States. It is slightly smaller (11 cm) than the marsh wren.

  Note: None of the other wren species inhabit marshes, although all forage by gleaning insects from vegetation and other surfaces. Wrens that inhabit moist woodlands and open areas are listed below.

- The house wren (*Troglodytes aedon*) (12 cm) breeds throughout most of the United States, into southern Canada. It inhabits open habitats with brush and shrubs and is found in orchards, farmyards, and urban gardens and parks.

- The winter wren (*Troglodytes troglodytes*) (10 cm) breeds in southern Canada, where it nests in dense brush, especially along moist coniferous woodlands. It winters primarily in the southeastern United States, where it inhabits many types of woodlands.

- The Carolina wren (*Thryothorus ludovicianus*) (14 cm) is nonmigratory and can be found in both summer and winter in the eastern United States as far north as northern Delaware and as far west as Oklahoma. It inhabits moist woodlands and swamps and wooded suburban areas.

- Bewick's wren (*Thryomanes bewickii*) (13 cm) is more common in western States than the house wren and is declining east of the Mississippi. It is found in brushland, stream edges, and open woods.

General references

Kale (1965); Gutzwiller and Anderson (1987); Leonard and Picman (1987); Verner (1965), National Geographic Society (1987).

Marsh Wren (*Cistothorus palustris*)

Factors	Age/Sex/ Cond./Seas.	Mean	Range or (95% CI of mean)	Location or subspecies	Reference	Note No.
Body Weight (g)	F breeding	10.6 ± 0.99 SD	9.0 - 13.5	New York	Tintle (unpubl.)	1
	M breeding	11.9 ± 0.72 SD	10.5 - 13.5			
	A F	9.4 ± 1.1 SD		Georgia	Kale, 1965	2
	A M	10.6 ± 0.7 SD				
	J B	9.4 ± 1.6 SD				
	nestling:			New York, Minnesota/fresh marshes	Welter, 1935	3
	day 1	1.1				
	day 3	2.1				
	day 5	4.7				
	day 7	6.8				
	day 9	10.0				
	day 11	10.6				
	day 13	11.3				
	at fledging	8.84 ± 0.70 SD		Georgia	Kale, 1965	
Egg Weight (g)		1.14 ± 0.10 SD		Georgia	Kale, 1965	
Metabolic Rate (lO_2/kg-day)	A B basal	91.2		Georgia (captive)	Kale, 1965	4
	A B near basal	113				5
	A B light activity	169				6
Metabolic Rate (kcal/kg-day)	A B basal	444		Georgia (captive)	Kale, 1965	7
	A B near basal	557 ± 115 SD			Kale, 1965	8
	A B light activity	788 ± 115 SD			Kale, 1965	9
		880 ± 90 SD			Kale, 1965	10
	A B free-living	1,209	(571 - 2,563)		estimated	11
	A F free-living	1,174	(554 - 2,486)			
	A M free-living					

Marsh Wren (*Cistothorus palustris*)

Factors	Age/Sex/ Cond./Seas.	Mean	Range or (95% CI of mean)	Location or subspecies	Reference	Note No.
Food Ingestion Rate	A B free-living	1,155 ± 130 SD kcal/kg-day		Georgia (captive)	Kale, 1965	12
	A B free-living	0.67 g/g-day		Georgia (captive)	estimated from Kale, 1965	13
	A F free-living A M free-living	0.99 g/g-day 0.96 g/g-day			estimated	14
Water Ingestion Rate (g/g-day)	A F A M	0.28 0.26			estimated	15
Surface Area (cm^2)	A F A M	45 48			estimated	16

Dietary Composition				Winter	Location/Habitat (measure)		Note No.
Hymenoptera		17.3		12.4	Georgia/salt marsh	Kale, 1965	17
Homoptera		13.0		40.1			
Coleoptera		11.6		12.6	(% wet volume;		
Lepidoptera		14.6		2.9	stomach contents)		
Diptera		8.9		7.7			
Hemiptera		5.4		10.0			
Orthoptera		5.6		0.8			
spiders		15.1		6.2			
other arthropods (crabs, amphipods)		1.8		0.9			
molluscs (snails)		3.5		4.0			
other (insect eggs, undetermined, etc.)		4.5		3.3			

Marsh Wren (*Cistothorus palustris*)

Population Dynamics	Age/Sex/ Cond./Seas.	Mean	Range	Location/Habitat	Reference	Note No.
Territory Size (ha)	A M spring	0.0060 ± 0.0014 SD 0.0156 ± 0.0050 SD 0.0085 ± 0.0042 SD		Georgia/salt marsh 1, 1958 Georgia/salt marsh 2, 1958 Georgia/salt marsh 2, 1959	Kale, 1965	
	A M spring	0.17 ± 0.021 SE	0.0242 - 0.360	west Washington/fresh mixed-species marsh	Verner, 1965	
	A M spring	0.07 ± 0.06 SD		Manitoba/fresh cattail marsh	Leonard & Picman, 1986	
Population Density	spring: pairs/ha	48.3 ± 5.3 SD	45.1 - 56.2	Georgia/salt marsh (4 years)	Kale, 1965	
	males/ha	8.5 16.9		west Washington/fresh mixed-species marsh (2 areas)	Verner, 1965	
	males/ha	3.7 ± 0.5 SD	3.4 - 4.3	Manitoba/fresh mixed-species marsh (3 years)	Leonard & Picman, 1987	
Clutch Size		4.5	3 - 5	Georgia/salt marsh	Kale, 1965	
		6.0 ± 0.19 SD	4 - 8	east Washington/fresh pond-margin marsh	Verner, 1965	
		5.8 ± 0.8 SD		Manitoba/fresh cattail marsh	Leonard & Picman, 1987	
Clutches/Year		1 - 2	0 - 3	Georgia/salt marsh	Kale, 1965	
		2	0 - 2	east Washington/fresh pond- margin marsh	Verner, 1965	
		2 - 3	0 - 3	west Washington/fresh mixed-species marsh	Verner, 1965	
Days Incubation		13.1	12 - 14	Georgia/salt marsh	Kale, 1965	
		15.1	13 - 16	west Washington/fresh marsh	Verner, 1965	

Marsh Wren (*Cistothorus palustris*)

Population Dynamics	Age/Sex/ Cond./Seas.	Mean	Range	Location/Habitat	Reference	Note No.
Age at Fledging	B B	12 - 13 14	10 - 15 11 - 16	Georgia/salt marsh Washington/fresh marshes	Kale, 1965 Verner, 1965	
Number Fledge per Active Nest		3.4 ± 3.4 SD		Manitoba/fresh mixed marsh	Leonard & Picman, 1987	
Number Fledge per Successful Nest		4.5 ± 1.3 SD 5.1 ± 1.2 SD		Manitoba/fresh mixed-species marsh Manitoba/fresh cattail marsh	Leonard & Picman, 1987 Leonard & Picman, 1987	
Age at Sexual Maturity	B B	1 year 1 year		Manitoba/fresh marsh Washington/fresh marsh	Leonard & Picman, 1987 Verner, 1971	
Annual Mortality Rates (percent)	A B J B	32 70		Georgia/salt marsh	Kale, 1965	

Seasonal Activity			End		Reference	Note No.
Mating/Laying	April mid-April late March late May	 May - June April - May	mid-August early July mid-July early August	Georgia eastern Washington (Turnbull) western Washington (Seattle) New York	Kale, 1965 Verner, 1965 Verner, 1965 Welter, 1935	
Hatching	early May mid-April		mid-July early August	eastern Washington (Turnbull) western Washington (Seattle)	Verner, 1965 Verner, 1965	
Migration fall	September		late October	New York, Minnesota	Welter, 1935	
spring	April	May mid-March (nonmigratory)	June	New York, Minnesota eastern Washington (Turnbull) western Washington (Seattle)	Welter, 1935 Verner, 1965 Verner, 1965	

Marsh Wren (*Cistothorus palustris*)

1 As cited in Dunning (1984).
2 Collection dates not specified. Resident population; presumably averaged from birds captured throughout the year.
3 Estimated from Welter's (1935) growth curve based on 50 nestlings.
4 Measured by oxygen respirometry; lowest value of metabolism of postabsorptive wrens resting in the dark (but not at night) at temperatures within the thermoneutral zone.
5 Measured by oxygen respirometry; birds not postabsorptive, but resting in a dark box at temperatures within the thermoneutral zone.
6 Measured by oxygen respirometry; birds somewhat active in their cage.
7 Estimated from oxygen consumption, for conditions, see note 3.
8 Estimated from oxygen consumption, for conditions, see note 4.
9 Estimated from oxygen consumption, for conditions, see note 5.
10 Estimated from measured daily food intake, excretory losses, assimilation, and respiration for active birds in small cages (173 weekly determinations total). Because of the birds' high activity levels, Kale (1965) considered the measure representative of free-living birds.
11 Estimated using allometric equation 3-36 (Nagy, 1987) and body weights from Kale (1965).
12 Measured daily food intake of birds in cages and measured caloric content of diet provided. Because of the birds' high activity levels, Kale (1965) considered the measure representative of free-living birds.
13 Estimated from Kale's (1965) measured daily food intake (see note 11) assuming 5.62 kcal/gram (dry weight) insects, a 70 percent assimilation efficiency, and a 67 percent water content for insects.
14 Estimated from free-living metabolic rate estimated from Nagy's (1987) equation 3-36 (see note 10) assuming the same parameters described in note 12. These predicted food ingestion rates (>0.95 g/g-day) for free-living birds exceed the value estimated for Kale's (1965) caged birds (0.67 g/g-day); however, the latter does not include metabolic requirements of searching for food, reproduction, or unusual thermoregulatory demands.
15 Estimated using equation 3-15 (Calder and Braun, 1983) and body weights from Kale (1965).
16 Estimated using equation 3-21 (Meeh, 1879 and Rubner, 1883, as cited in Walsberg and King, 1978) and body weights from Kale (1965).
17 Summer column represents combination of spring and summer data; winter column represents combination of fall and winter data.

References (including Appendix)

American Ornithologists' Union. (1983) Check-list of North American birds. Lawrence, KS: Allen Press, Inc.

Bent, A. C. (1948) Life histories of North American nuthatches, wrens, thrashers, and their allies. Washington, DC: U.S. Government Printing Office; Smithsonian Inst. U.S. Nat. Mus., Bull. 195.

Calder, W. A.; Braun, E. J. (1983) Scaling of osmotic regulation in mammals and birds. Am. J. Physiol. 244: R601-R606.

Dunning, J. B., Jr. (1984) Body weights of 686 species of North American birds. Western Bird Banding Association, Monograph No. 1. Cave Creek, AZ: Eldon Publishing.

Gutzwiller, K. J.; Anderson, S. H. (1987) Habitat suitability index models: marsh wren. U.S. Fish Wildl. Serv. Biol. Rep. 82(10.139).

Kale, H. W., II (1964) Food of the long-billed marsh wren, *Telmatodytes palustris griseus*, in the salt marshes of Sapelo Island, Georgia. Oriole 29: 47-61.

Kale, H. W., II. (1965) Ecology and bioenergetics of the long-billed marsh wren *Telmatoidytes palustris griseus* (Brewster) in Georgia salt marshes. Publ. Nuttall Ornith. Club No. 5.

Leonard, M. L.; Picman, J. (1986) Why are nesting marsh wrens and yellow-headed blackbirds spatially segregated? Auk 103: 135-140.

Leonard, M. L.; Picman, J. (1987) Nesting mortality and habitat selection by marsh wrens. Auk 104: 491-495.

Leonard, M. L.; Picman, J. (1988) Mate choice by marsh wrens: the influence of male and territory quality. Anim. Behav. 36: 517-528.

Meeh, K. (1879) Oberflachenmessungen des mensclichen Korpers. Z. Biol. 15: 426-458.

Nagy, K. A. (1987) Field metabolic rate and food requirement scaling in mammals and birds. Ecol. Monogr. 57: 111-128.

National Geographic Society. (1987) Field guide to the birds of North America. Washington, DC: National Geographic Society.

Orians, G. H.; Wilson, M. F. (1964) Interspecific territories of birds. Ecology 45: 736-745.

Picman, J. (1977) Intraspecific nest destruction in the long-billed marsh wren, *Telmatodytes palustris plustris*. Can. J. Zool. 55: 1997-2003.

Rubner, M. (1883) Uber den Einfluss der Korpergrosse auf Stoff- und Kraftweschsel. Z. Biol. 19: 535-562.

Verner, J. (1964) Evolution of polygamy in the long-billed marsh wren. Evolution 18: 252-261.

Verner, J. (1965) Breeding biology of the long-billed marsh wren. Condor 67: 6-30.

Verner, J. (1971) Survival and dispersal of male long-billed marsh wrens. Bird-Banding 42: 92-98.

Verner, J.; Engelsen, G. H. (1970) Territories, multiple nest building, and polygamy in the long-billed marsh wren. Auk 87: 557-567.

Walsberg, G. E.; King, J. R. (1978) The relationship of the external surface area of birds to skin surface area and body mass. J. Exp. Biol. 76: 185-189.

Welter, W. A. (1935) The natural history of the long-billed marsh wren. Wilson Bull. 47: 3-34.

2.1.15. American Robin (thrushes)

Order *Passeriformes*, Family *Muscicapidae*, Subfamily *Turdinae*. Thrushes are common, medium-sized birds that eat worms, insects, and fruit. They live in a variety of habitats, including woodlands, swamps, suburbs, and parks. Most thrushes build nests of mud and vegetation on the ground or in the crotches of trees or shrubs; bluebirds nest in holes in trees and posts or in nest boxes. This group forages primarily on the ground and in low vegetation by probing and gleaning. Some thrushes are neotropical migrants while others reside year-round in North America. Thrushes range in size from the eastern and western bluebirds (18 cm from bill tip to tail tip) to the American robin (25 cm). Male and female plumages are similar in most thrushes, although in some species, such as the bluebirds, the males are more brightly colored.

Selected species

The American robin (*Turdus migratorius*) occurs throughout most of the continental United States and Canada during the breeding season and winters in the southern half of the United States and in Mexico and Central America. The breeding range of the robin has expanded in recent times with the increasing area covered by lawns and other open habitats (Howell, 1942; Martin et al., 1951; James and Shugart, 1974).

Body size. The sexes are similar in size and appearance. Their size varies slightly geographically; the smallest robins are found in the eastern United States and along the Pacific coast, and the largest ones occur in the Rocky Mountains, northern Great Plains, and northern deserts (Aldrich and James, 1991).[d] The size of robins tends to increase with latitude in eastern North America but does not in western North America (Aldrich and James, 1991). Fledglings attain adult size at approximately 6 weeks of age (Howell, 1942).

Habitat. Access to fresh water, protected nesting sites, and productive foraging areas are important requirements for breeding robins (Speirs, 1953). Breeding habitats include moist forests, swamps, open woodlands, orchards, parks, and lawns. Robins forage on the ground in open areas, along habitat edges, or the edges of streams; they also forage above ground in shrubs and within the lower branches of trees (Paszkowski, 1982; Malmborg and Willson, 1988). Nests in wooded areas are usually near some type of opening such as the forest edge or a treefall gap (Young, 1955; Knupp et. al., 1977). During the nonbreeding season, robins prefer moist woods or fruit-bearing trees and shrubs (Robbins et al., 1983). In the fall, flocks of migratory robins are often found along forest edges or clearings where fruits are most plentiful (Baird, 1980).

Food habits. Robins forage by hopping along the ground in search of ground-dwelling invertebrates and by searching for fruit and foliage-dwelling insects in shrubs and low tree branches (Malmborg and Willson, 1988; Paszkowski, 1982). In the months preceding and during the breeding season, robins feed mainly (greater than 90 percent volume) on invertebrates and on some fruits; during the remainder of the year, their diet

---

[d]Based on linear measurements of museum study skins.

consists primarily (over 80 to 99 percent by volume) of fruits (Martin et al., 1951; Gochfeld and Burger, 1984; Wheelwright, 1986). Robins eat a wide variety of both plant and animal foods; in a compilation of diet records collected throughout the United States and southern Canada, Wheelwright (1986) found that robins consumed fruits from 51 genera and invertebrates from 107 families. Commonly eaten fruits include plums, dogwood, summac, hackberries, blackberries, cherries, greenbriers, raspberries, and juniper (Martin et al., 1951; Wheelwright, 1986); common invertebrates include beetles, caterpillars, moths, grasshoppers, spiders, millipedes, and earthworms (Martin et al., 1951; Wheelwright, 1986; Paszkowski, 1982). Wheelwright (1986) has compiled seasonal changes in the proportion of plants and invertebrates consumed by robins in three different sections of the United States (see table). Wheelwright (1986) also has summarized the average occurrence of fruits of various plant families in the stomachs of robins by month for these sections. Martin et al. (1951) have summarized the occurrence of fruits of various plant families in more specific areas of the United States (see Appendix).

Wheelwright (1986) found no differences between the sexes in the proportion or types of invertebrates and fruits eaten. Very young robins (up to at least 35 days of age) feed almost entirely on insects and other invertebrates (Howell, 1940). Older juveniles tend to eat a higher proportion of fruit and easy-to-capture prey than adults (Gochfeld and Burger, 1984; Wheelwright, 1986). In a given area, robins often show food preferences: a population in central New York seemed to prefer northern arrowwood and spice bush fruits over most other plants (Wheelwright, 1988); in Illinois, a group ate predominantly frost grapes and Virginia creeper in the late summer and fall (Malmborg and Willson, 1988).

During seasons when fruits dominate the diet, robins may need to consume quantities in excess of their body weight to meet their metabolic needs each day (see table). Robins as well as other fruit-eating birds exhibit a low digestive efficiency for fruits; Karasov and Levey (1990) estimated the metabolizable energy coefficient (MEC) (i.e., the proportion of food energy that actually is assimilated) for robins eating a mixed fruit diet to be only 55 percent, perhaps because of the low retention time of the digested matter in the gut (Levey and Karasov, 1992). The short retention time might actually be an adaptation to eating fruit because large quantities of fruit must be processed to obtain an adequate protein intake. In contrast, when eating insects, robins (as well as other bird species) exhibit a higher digestive efficiency of approximately 70 percent (Levey and Karasov, 1989). Moreover, the energy content of insects tends to be higher than that of most fruits, particularly on a wet-weight basis (see Chapter 4). Thus, during the spring when robins are consuming insects, they should consume a smaller amount relative to their body weight than when eating fruits (Chapter 4 provides approaches that can be used to estimate insect ingestion rates for robins).

Molt. Postjuvenile and postbreeding (prebasic) molts occur from late July to October (Wheelwright, 1986; Sharp, 1990). During this molt, robins are consuming largely fruits and other plant materials, which contain limited proteins. This may contribute to larger fruit consumption rates at this time. During the prebreeding (prealternate) molt, robins are feeding primarily on insects and other invertebrates (letter

from N.T. Wheelright, Department of Biology, Bowdoin College, Brunswick, ME, to Sue Norton, March 18, 1992).

Migration. Most robins nesting in the northern United States and Canada winter in the Gulf Coast States and the Carolinas (Speirs, 1953; Dorst, 1962, as cited in Henny, 1972). Wintering robins are most abundant between 30 and 35 degrees N latitude (Speirs, 1953). Robin flocks migrate during the day (Robbins et al., 1983); most northern robins leave their breeding grounds from September to November and return between February and April (Howell, 1942; Young, 1951; Fuller, 1977).

Breeding activities and social organization. The onset of the breeding season is later at higher latitudes (approximately 3 days for each additional degree in the east) and altitudes, but mating and egg laying generally occur in April or May (James and Shugart, 1974; Knupp et al., 1977). Males arrive on the breeding grounds before females to establish territories; females pair with established males, usually for the duration of the breeding season (Young, 1951). The female primarily builds the nest out of mud, dried grass, weedy stems, and other materials, constructing it on horizontal limbs, tree-branch crotches, within shrubs, or on any one of a number of man-made structures with horizontal surfaces (Howell, 1942; Klimstra and Stieglitz, 1957). First clutches usually contain three or four eggs; later clutches tend to contain fewer eggs (Young, 1955). The female does all of the incubating, which continues for 10 to 14 days following the laying of the second egg (Klimstra and Stieglitz, 1957; Young, 1955). Both males and females feed the nestlings (Young, 1955). Following fledging, the brood often divides, with the male and female each feeding half of the fledglings for another 2 weeks (Weatherhead and McRae, 1990). Females may start another brood before the current one is independent, leaving the male to feed all of the fledglings (Young, 1955). After reaching independence, juveniles often form foraging flocks in areas of high food availability (Hirth et al., 1969).

Early in the breeding season, robins often roost communally. Males can continue to use these roosts throughout the breeding season, whereas females stop once they begin incubating eggs (Howell, 1940; Pitts, 1984). As fall approaches and their diet turns more toward fruits, robins in many areas begin to roost communally again and may join other species, such as common grackles and European starlings, in large roosts (Morrison and Caccamise, 1990).

Home range and resources. During the breeding season, male robins establish breeding territories, which the female helps to defend against other robins. Nonetheless, the territories of different pairs often overlap where neither pair can establish dominance (Young, 1951). Most foraging during the breeding season is confined to the territory, but adults sometimes leave to forage in more productive areas that are shared with other individuals (Howell, 1942; Young, 1951; Pitts, 1984). In some prime nesting areas (e.g., dense coniferous forest), where robin densities are high, territories are small and the birds might often forage elsewhere (Howell, 1942). Adult robins often return to the same territory in succeeding years (Young, 1951). During the nonbreeding roosting period, robins are likely to return to the same foraging sites for many weeks and to join roosts within 1 to 3 km of these foraging areas (Morrison and Caccamise, 1990).

Population density. Nesting population density varies with habitat quality. Densely forested areas that provide well-protected nest sites have been found to support high densities of nesting robins; however, the relatively small territories found in these areas might not be used as much for foraging as those containing open areas (Howell, 1942). In the nonbreeding season, robins often join single- or mixed-species roosts that can include tens of thousands of birds (Morrison and Caccamise, 1990). Wintering robins are most common in pine or oak pine communities of the southeastern and southcentral United States, and decrease in abundance in drier, less forested areas westward (Speirs, 1953).

Population dynamics. Robins first attempt to breed the year after they hatch (Henny, 1972) and will raise multiple broods in a season (Howell, 1942). Predation is often a major source of mortality for both eggs and nestlings (Knupp et al., 1977; Klimstra and Stieglitz, 1957). Approximately half of the adult birds survive from year to year (Farner, 1949; Henny, 1972); the average longevity of a robin that survives to its first January is from 1.3 to 1.4 years (Farner, 1949).

Similar species (from general references)

- The wood thrush (*Hylocichla mustelina*), which is smaller than the robin (18 cm), co-occurs with the robin in some woodland habitats but is only present in the eastern United States. This species nests primarily in the interiors of mature forests and has been decreasing in abundance over the past decade as forested habitats in North America become increasingly fragmented (Robbins et al., 1989; Terborgh, 1989). This species is also primarily a summer resident, wintering in Florida and the neotropics.

- The hermit thrush (*Catharus guttatus*) is found in coniferous and mixed woodlands at northerly latitudes or high elevations and winters primarily in the southern half of the United States. This species is also significantly smaller (15 cm) than the robin.

- Swainson's thrush (*Catharus ustulatus*) is present in the western and northeastern United States during the summer months, wintering in the neotropics. It is also smaller than the robin (16 cm).

- The varied thrush (*Ixoreus naevius*) occurs in moist coniferous forests of the Pacific Northwest. This bird is similar in size (21 cm) to the robin.

General references

Howell (1942); Young (1955); National Geographic Society (1987); Robbins et al. (1983); Sharp (1990).

American Robin (*Turdus migratorius*)

Factors	Age/Sex/ Cond./Seas.	Mean	Range or (95% CI of mean)	Location or subspecies	Reference	Note No.
Body Weight (g)	A B all seas.	77.3 ± 0.36 SE	63.5 - 103	Pennsylvania	Clench & Leberman, 1978	1
	A M nonbreed.	86.2 ± 6.1 SD		New York	Wheelwright, 1986	
	A F nonbreed.	83.6 ± 6.4 SD				
	A M breeding	77.4		New York	Wheelwright, 1986	
	A F breeding	80.6				
	nestlings:					
	at hatching	5.5	4.1 - 6.7	New York/forest	Howell, 1942	
	day 2	12.6	8.4 - 17.5			
	day 4	24.3	17.9 - 32.3			
	day 6	39.4	32.5 - 45.9			
	day 8	50.9	42.0 - 59.3			
	day 10	55.2	49.0 - 63.2			
	day 14	55.0	51.8 - 58.2			
Egg Weight (g)		6.26	4.6 - 8.4	New York	Howell, 1942	
Metabolic Rate (kcal/kg-day)	A B basal	259			estimated	2
	- B existence	344		Kansas	Hazelton et al., 1984 (estimate)	3
	A B free-living	713	(336 - 1,513)		estimated	4
Food Ingestion Rate (kcal/kg-day)	A B free-living	1,070 ± 220 SD	760 - 1,330	Kansas	Hazelton et al., 1984	5
Food Ingestion Rate (g/g-day)	B B free-living	0.89 ± 0.73 SD		California	Skorupa & Hothem, 1985	6
	- B free-living	1.52 ± 0.25 SD	1.22 - 1.96	Kansas	Hazelton et al., 1984	7
Water Ingestion Rate (g/g-day)	A B	0.14			estimated	8

American Robin (*Turdus migratorius*)

Factors	Age/Sex/ Cond./Seas.	Mean	Range or (95% CI of mean)	Location or subspecies	Reference	Note No.
Surface Area (cm^2)	A B	198			Walsberg & King, 1978	9
	A B	182			estimated	10

Dietary Composition		Summer	Fall	Winter	Location/Habitat (measure)	Reference	Note No.
nestlings/fledglings:					south central New York/forest	Howell, 1942	
earthworms		15.0					
sowbugs		1.7					
spiders		2.3			(% wet weight; stomach contents)		
millipedes		3.1					
short-horned grass-hoppers		4.9			(age of robins ranged from 3 to 35 days after hatching; presence of grass is likely to be accidental - carried along with prey)		
beetles		11.6					
lepidopteran larvae		24.7					
ants		3.2					
unidentified animal		5.2					
grass (all parts)		19.5					
mulberries		3.2					
honeysuckle seeds		2.4					
unidentified plants		4.2					
adults:					eastern United States (% volume; stomach contents)	Wheelwright, 1986	11
fruit	7	68	92	83			
invertebrates	93	32	8	17			
adults:					central United States (% volume; stomach contents)	Wheelwright, 1986	11
fruit	8	41	76	73			
invertebrates	92	59	24	27			
adults:					western United States (% volume; stomach contents)	Wheelwright, 1986	11
fruit	17	29	63	70			
invertebrates	83	71	37	30			

American Robin (*Turdus migratorius*)

Population Dynamics	Age/Sex Cond./Seas.	Mean	Range	Location/Habitat	Reference	Note No.
Territory Size (ha)	spring A B A B A B	 0.42 0.11 0.21	 0.12 - 0.84	 Tennessee/campus New York/dense conifers /unspecified forest	 Pitts, 1984 Howell, 1942	 12
Foraging Home Range (ha)	summer, adults feeding: nestlings fledglings	 0.15 ± 0.021 SE 0.81 ± 0.13 SE		 Ontario/deciduous forest	 Weatherhead & McRae, 1990	
Population Density (pairs/ha)	spring A B A B A B	 1.98 ± 0.48 SD 8.6 4.9	 1.39 - 2.54	 Tennessee/campus New York/dense conifers /unspecified forest	 Pitts, 1984 Howell, 1942	
Clutch Size		3.17 3.45 ± 0.59 SD	1 - 5 1 - 5	Illinois/suburban Wisconsin/park	Klimstra & Stieglitz, 1957 Young, 1955	
Clutches/Year		2	1 - 3	New York/forest	Howell, 1942	
Days Incubation		12.5 ± 0.14 SE	10 - 14	Wisconsin/park	Young, 1955	13
Age at Fledging (days)	B	13.4 ± 0.13 SE		Wisconsin/park	Young, 1955	
Number Fledge per Breeding Pair		5.6 3.9 1.5 ± 0.45 SE		Wisconsin/park New York/forest Ontario/deciduous forest	Young, 1955 Howell, 1942 Weatherhead & McRae, 1990	
Number Fledge per Successful Nest	five areas	2.9 2.5 ± 0.15 SD	2.4 - 3.4 (over 5 areas)	Wisconsin/park Maine/forest	Young, 1955 Knupp et al., 1977	

American Robin (*Turdus migratorius*)

Population Dynamics	Age/Sex Cond./Seas.	Mean	Range	Location/Habitat	Reference	Note No.
Age at Sexual Maturity	B	1 year		NS	Henny, 1972	
Annual Mortality Rates (percent)	A B J B	51 ± 0.5 SE 78 - 82		North America	Henny, 1972	
Longevity (years)	after Jan. 1 of first year	1.3 - 1.4	up to 9	North America	Farner, 1949	
				Location		Note No.
	early April late April early May	mid-April late May	late April mid-July early July	Illinois south central New York n Maine	Klimstra & Stieglitz, 1957 Howell, 1942 Knupp et al., 1977	
	early May early May mid-May mid-April early June			west: California, New Mexico east: VA, WV, DC, NY northeast: VT, NH, CT Kentucky Colorado	James & Shugart, 1974 James & Shugart, 1974 James & Shugart, 1974 James & Shugart, 1974 James & Shugart, 1974	
		July & August		North America	Wheelwright, 1986	
	mid-Sept. February mid-March	mid-October	early November early November March mid-April	migrating through Minnesota leaving New York arriving New York arriving Wisconsin	Fuller, 1977 Howell, 1942 Howell, 1942 Young, 1951	

1 As cited in Dunning (1984).
2 Estimated using equation 3-27 (Lasiewski and Dawson, 1967) and body weights from Clench and Leberman (1978).
3 Hazelton et al. (1984) estimate using Kendeigh's (1969) equations for a 55-g bird.
4 Estimated using equation 3-36 (Nagy, 1987) and body weights from Clench and Leberman (1978).

American Robin (*Turdus migratorius*)

5 Estimated kcal consumed in feeding trials. Diet consisted of paired offerings of fruit (to test preferences) over a 2-day period, 12 trials per pairing. Fruit included strawberries (2.29 kcal/g), cherries (4.34 kcal/g), green grapes (2.59 kcal/g), and purple grapes (5.85 kcal/g). Mean weight of the birds = 55 g.

6 Based on gizzard contents of robins caught foraging in vineyards; diet 85 percent (wet weight) grapes, 11.5 percent invertebrates, and 4.5 percent other plants. Mean weight of the birds = 82.3 g.

7 Based on same study described in note 5 and estimated weights of fruits consumed.

8 Estimated using equation 3-15 (Calder and Braun, 1983) and body weights from Clench and Leberman (1978).

9 Beak surface area 3.1 cm^2; leg surface area 14.0 cm^2.

10 Estimated using equation 3-21 (Meeh, 1879 and Rubner, 1883, as cited in Walsberg and King, 1978) and body weights from Clench and Leberman (1978).

11 The U.S. Biological Survey and U.S. Fish and Wildlife Service records on which this study is based have several limitations: more birds were collected in agricultural and suburban than natural areas; seasons and time of day of collection were convenient to the collectors; quickly digested foods such as earthworms and other soft-bodied insects are underrepresented.

12 Birds nesting in high densities in dense coniferous forest probably foraged elsewhere more of the time than did birds with larger territories in less dense forests.

13 Also included data from Howell (1942) (Ithaca, New York) in calculations.

References (including Appendix)

Aldrich, J. W.; James, F. C. (1991) Ecogeographic variation in the American robin (*Turdus migratorius*). Auk 108: 230-249.

Armstrong, J. T. (1965) Breeding home range in the nighthawk and other birds: its evolutionary and ecological significance. Ecology 46: 619-629.

Baird, J. W. (1980) The selection and use of fruit by birds in an eastern forest. Wilson Bull. 92: 63-73.

Bovitz, P. (1990) Relationships of foraging substrate selection and roosting in American robins and European starlings [master's thesis]. New Brunswick, NJ: Rutgers University.

Brackbill, H. (1952) Three-brooded American robin. Bird-Banding 23: 29.

Butts, W. K. (1927) The feeding range of certain birds. Auk 44: 329-350.

Calder, W. A.; Braun, E. J. (1983) Scaling of osmotic regulation in mammals and birds. Am. J. Physiol. 244: R601-R606.

Clench, M. H.; Leberman, R. C. (1978) Weights of 151 species of Pennsylvania birds analyzed by month, age, and sex. Bull. Carnegie Mus. Nat. Hist.

Dorst, J. (1962) The migration of birds. Boston: Houghton Mifflin Co.

Dunning, J. B., Jr. (1984) Body weights of 686 species of North American birds. Western Bird Banding Association, Monograph No. 1. Cave Creek, AZ: Eldon Publishing.

Farner, D. S. (1945) Age groups and longevity in the American robin. Wilson Bull. 57: 56-74.

Farner, D. S. (1949) Age groups and longevity in the American robin: comments, further discussion, and certain revisions. Wilson Bull. 61: 68-81.

Fuller, P. (1977) Fall robin migration. Loon 49: 239-240.

Gochfeld, M.; Burger, J. (1984) Age differences in foraging behavior of the American robin (*Turdus migratorius*). Behaviour 88: 227-239.

Hamilton, W. J., Jr. (1940) Summer food of the robin determined by fecal analyses. Wilson Bull. 52: 79-82.

Hamilton, W. J., Jr. (1943) Spring food of the robin in central New York. Auk 60: 273.

Hazelton, P. K., Robel, R. J.; Dayton, A. D. (1984) Preferences and influences of paired food items on energy intake of American robins (*Turdus migratorius*) and gray catbirds (*Dumetella carolinensis*). J. Wildl. Manage 48: 198-202.

Henny, C. J. (1972) An analysis of the population dynamics of selected avian species with special reference to changes during the modern pesticide era. Washington, DC: Bur. Sport. Fish. Wildl., Wildl. Res. Rep. 1.

Hirth, D. H.; Hester, A. E.; Greeley, F. (1969) Dispersal and flocking of marked young robins (*Turdus m. migratorius*) after fledging. Bird-Banding 40: 208-215.

Howell, J. C. (1940) Spring roosts of the robin. Wilson Bull. 52: 19-23.

Howell, J. C. (1942) Notes on the nesting habits of the American robin (*Turdus migratorius* L.). Am. Midl. Nat. 28: 529-603.

James, F. C.; Shugart, H. H. (1974) The phenology of the nesting season of the American robin (*Turdus migratorius*) in the United States. Condor 76: 159-168.

Jung, R. E. (1992) Individual variation in fruit choice by American robins *Turdus migratorius*. Auk 109: 98-111.

Karasov, W. H.; Levey, D. J. (1990) Digestive system trade-offs and adaptations of frugivorous passerine birds. Physiol. Zool. 63: 1248-1270.

Kendeigh, S. C. (1969) Tolerance of cold and Bergmann's rule. Auk 86: 13-25.

Klimstra, W. D.; Stieglitz, W. O. (1957) Notes on reproductive activities of robins in Iowa and Illinois. Wilson Bull. 69: 333-337.

Knupp, D. M.; Owen, R. B.; Dimond, J. B. (1977) Reproductive biology of American robins in northern Maine. Auk 94: 80-85.

Lasiewski, R. C.; Dawson, W. R. (1967). A reexamination of the relation between standard metabolic rate and body weight in birds. Condor 69: 12-23.

Levey, D. J.; Karasov, W. H. (1989) Digestive responses of temperate birds switched to fruit or insect diets. Auk 106: 675-686.

Levey, D. J.; Karasov, W. H. (1992) Digestive modulation in a seasonal frugivore: the American robin *Turdus migratorius*. Am. J. Physiol. 262: G711-G718.

Malmborg, P. K.; Willson, M. F. (1988) Foraging ecology of avian frugivores and some consequences for seed dispersal in an Illinois woodlot. Condor 90: 173-186.

Martin, A. C.; Zim, H. S.; Nelson, A. L. (1951) American wildlife and plants. New York, NY: McGraw-Hill Book Company, Inc.

Meeh, K. (1879) Oberflachenmessungen des mensclichen Korpers. Z. Biol. 15: 426-458.

Morrison, D. W.; Caccamise, D. F. (1990) Comparison of roost use by three species of communal roostmates. Condor 92: 405-412.

Nagy, K. A. (1987) Field metabolic rate and food requirement scaling in mammals and birds. Ecol. Monogr. 57: 111-128.

National Geographic Society. (1987) Field guide to the birds of North America. Washington, DC: National Geographic Society.

Paszkowski, C. A. (1982) Vegetation, ground, and frugivorous foraging of the American robin *Turdus migratorius*. Auk 99: 701-709.

Pitts, T. D. (1984) Description of American robin territories in northwest Tennessee. Migrant 55: 1-6.

Robbins, C. S.; Bruun, B.; Zim, H. S. (1983) A guide to field identification: birds of North America. New York, NY: Golden Press.

Robbins, C. S.; Sauer, J. R.; Greenberg, R. S.; et al. (1989) Population declines in North American birds that migrate to the neotropics. Proc. Natl. Acad. Sci. USA 86: 7658-7662.

Rubner, M. (1883) Uber den Einfluss der Korpergrosse auf Stoff- und Kraftweschsel. Z. Biol. 19: 535-562.

Sharp, M. H. (1990) America's songbird--species profile: American robin (*Turdus migratorius*). Wild Bird 4: 22-27.

Skorupa, J. P.; Hothem, R. L. (1985) Consumption of commercially-grown grapes by American robins (*Turdus migratorius*): a field evaluation of laboratory estimates. J. Field Ornithol. 56: 369-378.

Speirs, J. M. (1953) Winter distribution of robins east of the Rocky Mountains. Wilson Bull. 65: 175-183.

Terborgh, J. (1989). Where have all the birds gone? Princeton, NJ: Princeton University Press.

Walsberg, G. E.; King, J. R. (1978) The relationship of the external surface area of birds to skin surface area and body mass. J. Exp. Biol. 76: 185-189.

Weatherhead, P. J.; McRae, S. B. (1990) Brood care in American robins: implications for mixed reproductive strategies by females. Anim. Behav. 39: 1179-1188.

Wheelwright, N. T. (1986) The diet of American robins: an analysis of U.S. Biological Survey records. Auk 103: 710-725.

Wheelwright, N. T. (1988) Seasonal changes in food preferences of American robins in captivity. Auk 105: 374-378.

Young, H. (1951) Territorial behavior of the eastern robin. Proc. Linnean Soc. N.Y. 58-62: 1-37.

Young, H. (1955) Breeding behavior and nesting of the eastern robin. Am. Midl. Nat. 53: 329-352.

2.2. MAMMALS

Table 2-2 lists the mammalian species described in this section. For range maps, refer to the general references identified in the individual species profiles. The remainder of this section is organized by species in the order presented in Table 2-2. The availability of information in the published literature varies substantially among species, as is reflected in the profiles. Some of the selected species include two or more subspecies; these are indicated in the profiles when reported by the investigators. Body lengths of the mammals are reported for the length of the outstretched animal from the tip of the nose to the base of the tail. The tail measurements do not include the hairs at the tip, but only the tail vertebrae. Body weight is reported as fresh wet weight with pelage, unless otherwise noted.

Table 2-2. Mammals Included in the Handbook

Order Subfamily	Common name	Scientific name	Section
Soricidae	short-tailed shrew	*Blarina brevicauda*	2.2.1
Canidae	red fox	*Vulpes vulpes*	2.2.2
Procyonidae	raccoon	*Procyon lotor*	2.2.3
Mustelidae			
Mustelinae	mink	*Mustela vison*	2.2.4
Lutrinae	river otter	*Lutra canadensis*	2.2.5
Phocidae	harbor seal	*Phoca vitulina*	2.2.6
Cricetidae			
Sigmodontinae	deer mouse	*Peromyscus maniculatus*	2.2.7
Arvicolinae	prairie vole	*Microtus ochrogaster*	2.2.8
	meadow vole	*Microtus pennsylvanicus*	2.2.9
	muskrat	*Ondatra zibethicus*	2.2.10
Leporidae	eastern cottontail	*Sylvilagus floridanus*	2.2.11

2.2.1. Short-Tailed Shrew (shrews)

Order *Insectivora*, Family *Soricidae*. Shrews are small insectivorous mammals that inhabit most regions of the United States. They have high metabolic rates and can eat approximately their body weight in food each day. Most species are primarily vermivorous and insectivorous, but some also eat small birds and mammals.

Selected species

The northern short-tailed shrew (*Blarina brevicauda)* ranges throughout the north-central and northeastern United States and into southern Canada (George et al., 1986). It eats insects, worms, snails, and other invertebrates and also may eat mice, voles, frogs, and other vertebrates (Robinson and Brodie, 1982). Because they prey on other vertebrates, shrews can concentrate DDT (and presumably other bioaccumulative chemicals) to levels 10 times higher than either *Peromyscus* and *Clethrionomys* (Dimond and Sherburne, 1969). Shrews are an important component of the diet of many owls (Palmer and Fowler, 1975; Burt and Grossenheider, 1980) and are also prey for other raptors, fox, weasels, and other carnivorous mammals (Buckner, 1966).

Body size. Short-tailed shrews are 8 to 10 cm in length with a 1.9 to 3.0 cm tail (Burt and Grossenheider, 1980). The short-tailed shrew is the largest member of the genus, with some weighing over 22 g (George et al., 1986; see table). Some studies have found little or no sexual dimorphism in size (Choate, 1972), while other reports show that males are slightly larger than females (George et al., 1986; Guilday, 1957).

Metabolism. Short-tailed shrews are active for about 16 percent of each 24-hour period (Martinsen, 1969), in periods of around 4.5 minutes at a time (Buckner, 1964). The shrew's metabolism is inversely proportional to the ambient temperature, within the range of 0 to 25°C (Randolph, 1973). Sleeping metabolism is half that associated with normal, exploring activity (Randolph, 1973). Randolph (1973) developed a regression equation for metabolism (cc O_2/g-hour) during (1) interrupted sleep:[e]

(Winter) $Y = 4.754 - 0.0869 (X - 16.4305)$
(Summer) $Y = 5.3448 - 0.1732 (X - 16.2310)$

and (2) normal exploring activity:

(Winter) $Y = 6.5425 - 0.0516 (X - 12.0600)$
(Summer) $Y = 7.949 - 0.2364 (X - 16.9554)$ where X= ambient temperature in °C.

Randolph (1973) also developed a regression equation for overall metabolism (cal/animal-hour) for shrews spending equal amounts of time sleeping and exploring (cal/animal-hour) as a function of ambient temperature:

---

[e]Randolph's (1973) equations could be simplified to match that of Deavers and Hudson (1981; next page) in form; however, we report the equations as Randolph reported them.

(Winter) $Y = 583.83 - 7.53 (X - 13.68)$
(Summer) $Y = 544.86 - 20.37 (X - 16.33)$, where X= ambient temperature in °C.

Deavers and Hudson (1981) found a linear increase in standard (near basal) metabolism with decreasing temperature that is similar to that for interrupted sleep described above (Y = standard metabolism in cc O_2/g-hour):

$Y = 8.84 - 0.22 (X)$ where X= ambient temperature.

Deavers and Hudson (1981) found that within the thermoneutral zone, the standard metabolic rate of the short-tailed shrew is approximately 190 percent the metabolic rate predicted from body weight.

Habitat. Short-tailed shrews inhabit a wide variety of habitats and are common in areas with abundant vegetative cover (Miller and Getz, 1977). Short-tailed shrews need cool, moist habitats because of their high metabolic and water-loss rates (Randolph, 1973).

Food habits. The short-tailed shrew is primarily carnivorous. Stomach analyses indicate that insects, earthworms, slugs, and snails can make up most of the shrew's food, while plants, fungi, millipedes, centipedes, arachnids, and small mammals also are consumed (Hamilton, 1941; Whitaker and Ferraro, 1963). Small mammals are consumed more when invertebrates are less available (Allen, 1938; Platt and Blakeley, 1973, cited in George et al., 1986). Shrews are able to prey on small vertebrates because they produce a poison secretion in their salivary glands that is transmitted during biting (Pearson, 1942, cited in Eadie, 1952). The short-tailed shrew stores food, especially in the autumn and winter (Hamilton, 1930; Martin, 1984). Robinson and Brodie (1982) found that short-tailed shrews cached most (86.6 percent) of the prey captured; only 9.4 percent was consumed immediately. Short-tailed shrews consume approximately 40 percent more food in winter than in summer (Randolph, 1973). The shrew must consume water to compensate for its high evaporative water loss, despite the fact that it obtains water from both food and metabolic oxidation (Chew, 1951). Deavers and Hudson (1981) indicated that the short-tailed shrew's evaporative water loss increases with increasing ambient temperature even within its thermoneutral zone. Short-tailed shrews' digestive efficiency is about 90 percent (Randolph, 1973).

Temperature regulation and molt. The short-tailed shrew does not undergo torpor but uses nonshivering thermogenesis (NST) to compensate for heat loss during cold stress in winter (Zegers and Merritt, 1987). The short-tailed shrew exhibits three molts. Two are seasonal molts, the first in October/November replaces summer with winter pelage and occurs in first- and second-year shrews. The spring molt can occur any time from February to October. The third molt occurs in postjuveniles that have reached adult size (Findley and Jones, 1956).

Breeding activities and social organization. The short-tailed shrew probably breeds all year, including limited breeding in winter even in the northern portions of its range (Blus, 1971). In Illinois, males were found to be most active from January to July, females from March to September (Getz, 1989). There are two peak breeding periods, in

the spring and in late summer or early fall (Blair, 1940). The home ranges of short-tailed shrews in summer overlap both within and between sexes (Blair, 1940), although females with young do exhibit some territoriality (Platt, 1976). Nomadic shrews are either young of the year or adults moving to areas with more abundant prey (Platt, 1976).

Home range and resources. Short-tailed shrews inhabit round, underground nests and maintain underground runaways, usually in the top 10 cm of soil, but sometimes as deep as 50 cm (Hamilton, 1931; and Jameson, 1943, cited in George et al., 1986). Winter, nonbreeding home ranges can vary from 0.03 to 0.07 ha at high prey densities to 1 to 2.2 ha during low prey densities with a minimum of territory overlap. In the summer, ranges of opposite sex animals overlap, but same sex individuals do not; females with young exclude all others from their area (Platt, 1976).

Population density. Population densities vary by habitat and season (Getz, 1989; Jackson, 1961; Platt, 1968). In east-central Illinois, population density was higher in bluegrass than in tallgrass or alfalfa (Getz, 1989). In all three of these habitats, the short-tailed shrew exhibited annual abundance cycles, with peak densities ranging from 2.5 to 45 shrews per hectare, depending on the habitat (Getz, 1989). The peaks occurred from July to October (12.9/ha average for all three habitats), apparently just following peak precipitation levels (Getz, 1989).

Population dynamics. Winter mortality up to 90 percent has been reported for the short-tailed shrew (Barbehenn, 1958; Gottschang, 1965; Jackson, 1961, cited in George et al., 1986); however, Buckner (1966) suggests that mortality rates in winter may be closer to 70 percent, which is similar to the average monthly mortality rate he found for subadult animals. Several litters, averaging four to five pups, are born each year (George et al., 1986).

Similar species (from general references)

- The masked shrew (*Sorex cinereus*) (length 5.1 to 6.4 cm; weight 3 to 6 g) is smaller than the short-tailed shrew and is the most common shrew in moist forests, open country, and brush of the northern United States and throughout Canada and Alaska. It feeds primarily on insects.

- Merriam's shrew (*Sorex merriami*) (5.7 to 6.4 cm) is found in arid areas and sagebrush or bunchgrass of the western United States and is smaller than the short-tailed shrew.

- The smokey shrew (*Sorex fumeus*) (6.4 to 7.6 cm; 6 to 9 g), smaller than the short-tailed, prefers birch and hemlock forests with a thick leaf mold on the ground to burrow in. It uses burrows made by small mammals or nests in stumps, logs, and among rocks. Range is limited to the northeast United States and east of the Great Lakes in Canada.

- The southeastern shrew (*Sorex longirostris*) (5.1 to 6.4 cm; 3 to 6 g) prefers moist areas. Found mostly in open fields and woodlots, its range is limited

to the southeastern United States. It nests in dry grass or leaves in a shallow depression.

- The long-tailed shrew (*Sorex dispar*) (7.0 cm; 5 to 6 g) inhabits cool, moist, rocky areas in deciduous or deciduous-coniferous forests of the northeast, extending south to the North Carolina and Tennessee border.

- The vagrant shrew (*Sorex vagrans*) (5.9 to 7.3 cm; 7 ± g) inhabits marshy wetlands and forest streams. Its range is confined to the western United States, excluding most of California and Nevada. In addition to insects, it also eats plant material.

- The Pacific shrew (*Sorex pacificus*) (8.9 cm) is slightly larger than the short-tailed shrew. It is limited to redwood and spruce forests, marshes, and swamps of the northern California and southern Oregon coasts.

- The dwarf shrew (*Sorex nanus*) (6.4 cm) is rare throughout its limited range in the western United States.

- The least shrew (*Cryptotis parva*) (5.6 to 6.4 cm; 4 to 7 g) is easily distinguished from other shrews by its cinnamon color. It inhabits grassland and marsh; its range is similar to the short-tailed shrew but does not extend as far north.

- The desert shrew (*Notiosorex crawfordi*) (Gray shrew) (5.1 to 6.6 cm) is rarely seen and is found only in the arid conditions, chaparral slopes, alluvial fans, and around low desert shrubs of the extreme southwest. It nests beneath plants, boards, or debris.

General references

Burt and Grossenheider (1980); George et al. (1986).

Short-Tailed Shrew (*Blarina brevicauda*)

Factors	Age/Sex/ Cond./Seas.	Mean	Range or (95% CI)	Location	Reference	Note No.
Body Weight (g)	A B	15.0 ± 0.78 SD		New Hampshire	Schlesinger & Potter, 1974	
	M summer	19.21 ± 0.42 SD	17.0 - 22.0	w Pennsylvania	Guilday, 1957	
	F summer	17.40 ± 0.48 SD	14.0 - 21.0			
	M fall	16.87 ± 0.21 SD	13.0 - 22.0			
	M fall	15.58 ± 0.23 SD	12.5 - 22.5			
	neonate		0.67 - 1.29	Maryland/lab	Blus, 1971	
Metabolic Rate (lO_2/kg-day)	basal	82	80 - 84	Pennsylvania/lab	Pearson, 1947	1
	average daily	125	106 - 150			
	average daily	127 ± 15.3 SD	94 - 218	NS/lab	Morrison, 1948	2
	+ 20°C	126.5		Ontario, CAN/lab	Randolph, 1973	
	- 20°C	207.1				
Metabolic Rate (kcal/kg-day)	basal	390		Pennsylvania/lab	Pearson, 1947	3
	average daily	600				
	average daily	680		Wisconsin/lab	Morrison et al., 1957	4
Food Ingestion Rate	A B: 22 - 23°C	7.95 ±0.17 g/d SD		Ohio/lab	Barrett & Stuek, 1976	5
		0.49 g/g-day				
		0.62 g/g-day				
	A B: 25°C			Wisconsin/lab	Morrison et al., 1957	6
Water Ingestion Rate (g/g-day)	A B	0.223		Illinois/lab	Chew, 1951	
Inhalation Rate (m^3/day)	A B	0.026			estimated	7
Surface Area (cm^2)	A B	54		Pennsylvania/lab	Pearson, 1947	8
	A B	84			estimated	9

Short-Tailed Shrew (*Blarina brevicauda*)

Dietary Composition	Spring	Summer	Fall	Winter	Location/Habitat (measure)	Reference	Note No.
earthworms		31.4			New York/NS	Whitaker & Ferraro, 1963	
slugs & snails		27.1					
misc. animals		8.1			(% volume; stomach		
Endegon (fungi)		7.7			contents)		
beetles		5.9					
vegetation		5.4			(June through October		
lepidopteran larvae		4.3			collections combined)		
chilopoda		1.8					
other		8.6					
insects		77.6			eastern United States	Hamilton, 1941	
annelids		41.8			(primarily New York)/NS		
vegetable matter		17.1					
centipedes		7.4			(% frequency of		
arachnids		6.1			occurrence; stomach		
snails		5.4			contents)		
small mammals		5.2			(all seasons combined)		
crustacea		3.7					
undetermined		2.4					

Population Dynamics	Age/Sex/ Cond./Seas.	Mean	Range	Location/Habitat	Reference	Note No.
Home Range Size (ha)	A F summer		< 0.1 - 0.36	s Michigan/bluegrass	Blair, 1940	
	A M summer		< 0.1 - 1.8			
	B B all	0.39 ± 0.036 SD		s Manitoba/tamarack bog	Buckner, 1966	
	B B winter (a)		0.03 - 0.07	c New York/old field	Platt, 1976	10
	B B winter (b)		0.10 - 0.22			

Short-Tailed Shrew (*Blarina brevicauda*)

Population Dynamics	Age/Sex/ Cond./Seas.	Mean	Range	Location/Habitat	Reference	Note No.
Population Density (N/ha)	winter spring summer fall	2.3 5.9 11.4 10.0		ec Illinois/alfalfa	Getz, 1989	
			1.6 - 121	Wisconsin/beech-maple	Jackson, 1961; Williams, 1936	11
	B B		0.06 - 0.16	Manitoba, Canada/ tamarack bog	Buckner, 1966	
Litter Size		5.4	2 - 8	Indiana/NS	French, 1984	
		4.7 ± 0.2 SE	1 - 8	Maryland/lab	Blus, 1971	
Litters /Year		several		NS/NS	George et al., 1986	
Days Gestation		21 - 22		Maryland/lab	Blus, 1971	12
Age at Weaning (days)		25 - 30		Maryland/lab	Blus, 1971	
Age at Sexual Maturity	M		≥ 65 days	Maryland/lab	Blus, 1971	
	M		≥ 83 days	NS/NS	Pearson, 1944	11
	F	< 1 year		Indiana/NS	French, 1984	
Annual Mortality	B B	93 %		MD, PA, NY, MA/NS	Pearson, 1945	
Longevity	M F	4.6 months 4.4 months		Maryland/lab	Blus, 1971	13
	B		≤ 20 months	c New York/woods, field	Dapson, 1968	

Short-Tailed Shrew (*Blarina brevicauda*)

Seasonal Activity	Begin	Peak	End	Location	Reference	Note No.
Mating	late February	April - May	mid-September	Indiana	French, 1984	
		May - June		c New York	Dapson, 1968	
	October February		November July	NS NS	Findley & Jones, 1956 Findley & Jones, 1956	11 11

1 Ambient temperatures 25 to 30°C; mean weight of shrews = 21.2 g.
2 Ambient temperatures 15 to 25°C; mean weight of shrews = 21 g.
3 Calculated from oxygen consumption rate; mean weight of shrews = 21.2 g. Basal metabolism is 186 percent higher than predicted from equations 3-42 or 3-43, in agreement with the finding of Deavers and Hudson (1981). Average daily metabolism was estimated over 24-hour period at 25 to 30°C and is 146 percent higher than the free-living metabolic rate predicted on the basis of equation 3-47 (Nagy, 1987).
4 Calculated from average food consumption rate (liver; 1.22 kcal/g wet weight) at 25°C. This value is 167 percent higher than the free-living metabolic rate predicted on the basis of equation 3-47 (Nagy, 1987).
5 Diet of mealworms estimated to provide 2.33 kcal/g live weight. Assimilation efficiency for shrews consuming mealworms = 89.5 ± 1.9 SD.
6 Diet of beef liver; mean weight of shrews = 21 g.
7 Estimated using equation 3-20 (Stahl, 1967) and adult male summer body weights from Guilday (1957).
8 Estimate for 21.2-g shrew.
9 Estimated using equation 3-22 (Stahl, 1967) and adult male summer body weights from Guilday (1957).
10 (a) At high prey density; (b) at low prey density.
11 Cited in George et al. (1986).
12 From pairing to parturition.
13 Mean longevity of animals that survived to weaning.

References (including Appendix)

Allen, D. L. (1938) Ecological studies on the vertebrate fauna of a 500-acre farm in Kalamazoo County, Michigan. Ecol. Monogr. 8: 347-436.

Barbehenn, K. R. (1958) Spatial and population relationships between *Microtus* and *Blarina*. Ecology 39: 293-304.

Barrett, G. W.; Stueck, K. L. (1976) Caloric ingestion rate and assimilation efficiency of the short-tailed shrew, *Blarina brevicauda*. Ohio J. Sci. 76: 25-26.

Blair, W. F. (1940) Notes on home ranges and populations of the short-tailed shrew. Ecology 21: 284-288.

Blair, W. F. (1941) Some data on the home ranges and general life history of short-tailed shrews, red-backed voles and woodland jumping mice in northern Michigan. Am. Midl. Nat. 25: 681-685.

Blus, L. J. (1971) Reproduction and survival of short-tailed shrews (*Blarina brevicauda*) in captivity. Lab. Anim. Sci. 21: 884-891.

Buckner, C. H. (1964) Metabolism, food capacity, and feeding behavior in four species of shrews. Can. J. Zool. 42: 259-279.

Buckner, C. H. (1966) Populations and ecological relationships of shrews in tamarack bogs of southeastern Manitoba. J. Mammal. 47: 181-194.

Burt, W. H.; Grossenheider, R. P. (1980) A field guide to the mammals of North America north of Mexico. Boston, MA: Houghton Mifflin Co.

Chew, R. M. (1951) The water exchanges of some small mammals. Ecol. Monogr. 21: 215-225.

Choate, J. R. (1972) Variation within and among populations of short-tailed shrews, *Blarina brevicauda*. J. Mammal. 53: 116-128.

Dapson, R. W. (1968) Reproduction and age structure in a population of short-tailed shrews, *Blarina brevicauda*. J. Mammal. 49: 205-214.

Deavers, D. R.; Hudson, J. W. (1981) Temperature regulation in two rodents (*Clethrionomys gapperi* and *Peromyscus leucopus*) and a shrew (*Blarina brevicauda*) inhabiting the same environment. Physiol. Zool. 54: 94-108.

Dimond, J. B.; Sherburne, J. A. (1969) Persistence of DDT in wild populations of small mammals. Nature 221: 486-487.

Eadie, R. W. (1952) Shrew predation and vole populations on a localized area. J. Mammal. 33: 185-189.

Findley, J. S.; Jones, J. K., Jr. (1956) Molt of the short-tailed shrew, *Blarina brevicauda*. Am. Midl. Nat. 56: 246-249.

French, T. W. (1984) Reproduction and age structure of three Indiana shrews. Proc. Indiana Acad. Sci. 94: 641-644.

George, S. B.; Choate, J. R.; Genoways, H. H. (1986) *Blarina brevicauda*. American Society of Mammalogists; Mammalian Species 261.

Getz, L. L. (1989) A 14-year study of *Blarina brevicauda* populations in east-central Illinois. J. Mammal. 70: 58-66.

Gottschang, J. L. (1965) Winter populations of small mammals in old fields of southwestern Ohio. J. Mammal. 46: 44-52.

Guilday, J. E. (1957) Individual and geographic variation in *Blarina brevicauda* from Pennsylvania. Ann. Carnegie Mus. 35: 41-68.

Hamilton, W. J., Jr. (1929) Breeding habits of the short-tailed shrew, *Blarina brevicauda*. J. Mammal. 10: 125-134.

Hamilton, W. J., Jr. (1930) The food of the Soricidae. J. Mammal. 11: 26-39.

Hamilton, W. J., Jr. (1931) Habits of the short-tailed shrew, *Blarina brevicauda* (Say). Ohio J. Sci. 31: 97-106.

Hamilton, W. J., Jr. (1941) The foods of small forest mammals in eastern United States. J. Mammal. 22: 250-263.

Jackson, H. H. T. (1961) Mammals of Wisconsin. Madison, WI: University of Wisconsin Press.

Jameson, E. W., Jr. (1943) Notes on the habits and siphanapterous parasites of the mammals of Welland County, Ontario. J. Mammal. 24: 194-197.

Lomolino, M. V. (1984) Immigrant selection, predation, and the distribution of *Microtus pennsylvanicus* and *Blarina brevicauda* on islands. Am. Nat. 123: 468-483.

Martin, I. G. (1984) Factors affecting food hoarding in the short-tailed shrew *Blarina brevicauda*. Mammalia 48: 65-71.

Martinsen, D. L. (1969) Energetics and activity patterns of short-tailed shrews (*Blarina*) on restricted diets. Ecology 50: 505-510.

Miller, H.; Getz, L. L. (1977) Factors influencing local distribution and species diversity of forest small mammals in new England. Can. J. Zool. 55: 806-814.

Morrison, P. R. (1948) Oxygen consumption in several small wild mammals. J. Cell. Comp. Physiol. 31: 69-96.

Morrison, P. R.; Pierce, M.; Ryser, F. A. (1957) Food consumption and body weight in the masked and short-tailed shrews (genus *Blarina*) in Kansas, Iowa, and Missouri. Ann. Carnegie Mus. 51: 157-180.

Nagy, K. A. (1987) Field metabolic rate and food requirement scaling in mammals and birds. Ecol. Mono. 57: 111-128.

Neal, C. M.; Lustick, S. I. (1973) Energetics and evaporative water loss in the short-tailed shrew *Blarina brevicauda*. Physiol. Zool. 46: 180-185.

Palmer, E. L.; Fowler, H. S. (1975) Fieldbook of natural history. New York, NY: McGraw-Hill Book Co.

Pearson, O. P. (1942) The cause and nature of a poisonous action produced by the bite of a shrew (*Blarina brevicauda*). J. Mammal. 23: 159-166.

Pearson, O. P. (1944) Reproduction in the shrew (*Blarina brevicauda* Say). Am. J. Anat. 75: 39-93.

Pearson, O. P. (1945) Longevity of the short-tailed shrew. Am. Midl. Nat. 34: 531-546.

Pearson, O. P. (1947) The rate of metabolism of some small mammals. Ecology 29: 127-145.

Platt, A. P. (1968) Differential trap mortality as a measure of stress during times of population increase and decrease. J. Mammal. 49: 331-335.

Platt, W. J. (1974) Metabolic rates of short-tailed shrews. Physiol. Zool. 47: 75-90.

Platt, W. J. (1976) The social organization and territoriality of short-tailed shrew (*Blarina brevicauda*) populations in old-field habitats. Anim. Behav. 24: 305-318.

Platt, W. J.; Blakeley, N. R. (1973) Short-term effects of shrew predation upon invertebrate prey sets in prairie ecosystems. Proc. Iowa Acad. Sci. 80: 60-66.

Randolph, J. C. (1973) Ecological energetics of a homeothermic predator, the short-tailed shrew. Ecology 54: 1166-1187.

Richardson, J. H. (1973) Locomotory and feeding activity of the shrews, *Blarina brevicauda* and *Suncus murinus*. Am. Midl. Nat. 90: 224-227.

Robinson, D. E.; Brodie, E. D. (1982) Food hoarding behavior in the short-tailed shrew *Blarina brevicauda*. Am. Midl. Nat. 108: 369-375.

Schlesinger, W. H.; Potter, G. L. (1974) Lead, copper, and cadmium concentrations in small mammals in the Hubbard Brook Experimental Forest. Oikos 25:148-152.

Stahl, W. R. (1967) Scaling of respiratory variables in mammals. J. Appl. Physiol. 22: 453-460.

Whitaker, J. O., Jr.; Ferraro, M. G. (1963) Summer food of 220 short-tailed shrews from Ithaca, New York. J. Mammal. 44: 419.

Williams, A. B. (1936) The composition and dynamics of a beech-maple climax community. Ecol. Monogr. 6: 317-408.

Zegers, D. A.; Merritt, J. F. (1987) Adaptations of *Peromyscus* for winter survival in an Appalachian montane forest. J. Mammal. 69: 516-523.

2.2.2. Red Fox (foxes and coyotes)

Order *Carnivora*, Family *Canidae*. Unlike the more social wolves, foxes and coyotes tend to hunt alone, although coyotes may hunt larger prey in pairs. Foxes and coyotes are primarily carnivorous, preying predominantly on small mammals, but they also may eat insects, fruits, berries, seeds, and nuts. Foxes are found throughout most of the United States and Canada, including the arctic, as are coyotes with the exception of the southeastern United States. Foxes and coyotes are active primarily at night.

Selected species

Red foxes (*Vulpes vulpes*) are present throughout the United States and Canada except in the southeast, extreme southwest, and parts of the central states. Red fox prey extensively on mice and voles but also feed on other small mammals, insects, hares, game birds, poultry, and occasionally seeds, berries, and fruits (Palmer and Fowler, 1975). Twelve subspecies are recognized in North America (Ables, 1974).

Body size. The dog-sized red fox has a body about 56 to 63 cm in length, with a 35 to 41 cm tail (Burt and Grossenheider, 1980). They weigh from 3 to 7 kg, with the males usually outweighing the females by about 1 kg (Voigt, 1987; see table).

Habitat. As the most widely distributed carnivore in the world, the red fox can live in habitats ranging from arctic areas to temperate deserts (Voigt, 1987). Red foxes utilize many types of habitat--cropland, rolling farmland, brush, pastures, hardwood stands, and coniferous forests (MacGregor, 1942; Eadie, 1943; Cook and Hamilton, 1944; Ables, 1974). They prefer areas with broken and diverse upland habitats such as occur in most agricultural areas (Ables, 1974; Samuel and Nelson, 1982; Voigt, 1987). They are rare or absent from continuous stands of pine forests in the southeast, moist conifer forests along the Pacific coast, and semiarid grasslands and deserts (Ables, 1974).

Food habits. The red fox feeds on both animal and plant material, mostly small mammals, birds, insects, and fruit (Korschgen, 1959; Samuel and Nelson, 1982). Meadow voles are a major food in most areas of North America; other common prey include mice and rabbits (Korschgen, 1959; Voigt, 1987). Game birds (e.g., ring-necked pheasant and ruffed grouse) and waterfowl are seasonally important prey in some areas (Pils and Martin, 1978; Sargeant, 1972; Voigt and Broadfoot, 1983). Plant material is most common in red fox diets in summer and fall when fruits, berries, and nuts become available (Johnson, 1970; Major and Sherburne, 1987). Red foxes often cache food in a hole for future use (Samuel and Nelson, 1982). They also are noted scavengers on carcasses or other refuse (Voigt, 1987). Most activity is nocturnal and at twilight (Nowak and Paradiso, 1983).

Temperature regulation and molt. In winter, foxes do not undergo hibernation or torpor; instead, they are active year-round. They undergo one molt per year, which usually begins in April and is finished by June. The winter coat is regrown by October or November in northern latitudes (Voigt, 1987).

Breeding activities and social organization. Breeding occurs earlier in the south than in the red fox's northern ranges (Samuel and Nelson, 1982) (see table). A mated pair maintains a territory throughout the year, with the male contributing more to its defense than the female (Preston, 1975). Pups are born and reared in an underground den, and the male assists the female in rearing young, bringing food to the den for the pups (Samuel and Nelson, 1982). Pups first emerge from the den when 4 to 5 weeks old (Samuel and Nelson, 1982). Once considered solitary, red foxes now are reported to exhibit more complex social habits (MacDonald and Voigt, 1985). A fox family, the basic social unit, generally consists of a mated pair or one male and several related females (MacDonald, 1980; Voigt, 1987). The additional females are usually nonbreeders that often help the breeding female (Voigt, 1987).

Home range and resources. The home ranges of individuals from the same family overlap considerably, constituting a family territory (Sargeant, 1972; Voigt and MacDonald, 1984). Territories of neighboring red fox families are largely nonoverlapping and contiguous, usually resulting in all parts of a landscape being occupied by foxes. Territory sizes range from less than 50 to over 3,000 ha (see table). Territories in urban areas tend to be smaller than those in rural areas (Ables, 1969). Adults visit most parts of their territory on a regular basis; however, they tend to concentrate their activities near to their dens, preferred hunting areas, abundant food supplies, and resting areas (Ables, 1974; Keenan, 1981). Territory boundaries often conform to physical landscape features such as well-traveled roads and streams (Ables, 1974). Territory defense is primarily by nonaggressive mechanisms involving urine scent-marking and avoidance behaviors. Scent marking occurs throughout the territory; there is little patrolling of territory boundaries. Each fox or family usually has a main underground den and one or more other burrows within the home range (Nowak and Paradiso, 1983). Most dens are abandoned burrows of other species (e.g., woodchucks, badgers) (Samuel and Nelson, 1982). Tunnels are up to 10 m in length and lead to a chamber 1 to 3 m below the surface (Nowak and Paradiso, 1983). Pup-rearing dens are the focal point of fox activity during spring and early summer. Foxes have some rest sites and usually forage away from the den (Voigt, 1987).

Population density. One red fox family per 100 to 1,000 ha is typical (Voigt, 1987; see table). Red foxes have larger home ranges where population densities are low and in poorer habitats (Voigt, 1987). Most young foxes, especially males, disperse before the age of 1 (Voigt, 1987), usually during September to March, with peaks in dispersal in October and November (Phillips et al., 1972; Storm et al., 1976).

Population dynamics. Foxes usually produce pups their first year, except in extremely high density areas and in some years in northern portions of their range where they may delay breeding until the next season (Allen, 1984; Harris, 1979; Storm et al., 1976; Voigt and MacDonald, 1984). Litter size generally averages four to six pups (see table). The pups leave the den about 1 month after birth, and they are weaned by about 8 to 10 weeks of age (Ables, 1974). Red foxes incur high mortality rates as a result of shooting, trapping, disease, and accidents (e.g., roadkills) (Storm et al., 1976). Two factors that tend to limit red fox abundance are competition with other canids, especially coyotes, and seasonal limits on food availability (Voigt, 1987). Fecundity is higher in areas of high mortality and low population densities (Voigt, 1987).

Similar species (from general references)

- The arctic fox (*Alopex lagopus*) is smaller than the red fox (body length approximately 51 cm; weight 3.2 to 6.7 kg) and is restricted in its distribution to the arctic, found in the United States only in Alaska. This species primarily scavenges for food but also eats lemmings, hares, birds, and eggs as well as berries in season.

- The swift fox (*Vulpes velox*) is smaller than the red fox (body length 38 to 51 cm; weight 1.8 to 2.7 kg) and inhabits the deserts and plains of the southwest and central United States. It dens in ground burrows and feeds on small mammals and insects.

- The kit fox (*Vulpes macrotis*) is similar in size to the swift fox and is considered by some to be the same species, although it has noticeably larger ears. It inhabits the southwestern United States and prefers open, level, sandy areas and low desert vegetation. It feeds on small mammals and insects.

- The gray fox (*Urocyon cinereoargenteus*) is similar in size (body length 53 to 74 cm; weight 3.2 to 5.8 kg) to the red fox and ranges over most of the United States except the northwest and northern prairies, inhabiting chaparral, open forests, and rimrock regions. Secretive and nocturnal, gray foxes will climb trees to evade enemies. They feed primarily on small mammals but also eat insects, fruits, acorns, birds, and eggs.

- The coyote (*Canis latrans*) is much larger (body length 81 to 94 cm; weight 9 to 22 kg) than the red fox and is found throughout most of the United States (except possibly eastern), western Canada, and Alaska. It inhabits prairies, open woodlands, brushy and boulder-strewn areas, and dens in the ground. Coyotes share some feeding habits with the red fox but also scavenge and hunt larger prey in pairs.

General references

Ables (1974); Burt and Grossenheider (1980); Palmer and Fowler (1975); Voigt (1987).

Red Fox (*Vulpes vulpes*)

Factors	Age/Sex/ Cond./Seas.	Mean	Range or (95% CI of mean)	Location	Reference	Note No.
Body Weight (kg)	A M spring	5.25 ± 0.18 SE	4.54 - 7.04	Illinois	Storm et al., 1976	
	A F spring	4.13 ± 0.11 SE	3.27 - 4.72			
	A M fall	4.82 ± 0.081 SE	4.13 - 5.68	Iowa	Storm et al., 1976	
	A F fall	3.94 ± 0.079 SE	2.95 - 4.59			
	neonate B	0.102 ± 0.12 SD	0.071 - 0.109	Wisconsin	Storm & Ables, 1966	
	at weaning B	0.70		North Dakota	Sargeant, 1978	
Pup Growth Rate (g/day)	birth to weaning	15.9		North Dakota/lab	Sargeant, 1978	
Metabolic Rate (kcal/kg-day)	J summer	193 ± 56 SD		Ohio/lab	Vogtsberger & Barrett, 1973	
	A M basal	47.9			estimated	1
	A F basal	51.1				
	A M free-living	161	(68 - 383)		estimated	2
	A F free-living	168	(71 - 400)			
Food Ingestion Rate (g/g-day)	J 5-8 wks	0.16		North Dakota/lab	Sargeant, 1978	
	J 9-12 wks	0.12				
	J 13-24 wks	0.11				
	A before whelp	0.075		North Dakota/captive	Sargeant, 1978	3
	F after whelp	0.14				
	A nonbreeding	0.069		North Dakota/captive	Sargeant, 1978	
Water Ingestion Rate (g/g-day)	A M	0.084			estimated	4
	A F	0.086				
Inhalation Rate (m^3/day)	A M	2.0			estimated	5
	A F	1.7				

Red Fox (*Vulpes vulpes*)

Factors	Age/Sex/ Cond./Seas.	Mean	Range or (95% CI of mean)	Location	Reference	Note No.
Surface Area (cm^2)	A M A F	3,220 2,760			estimated	6

Dietary Composition	Spring				Location/Habitat (measure)	Reference	Note No.
rabbits				44.4	Nebraska/statewide	Powell & Case, 1982	
small mammals				33.0			
pheasant				8.4	(% wet volume; stomach		
other birds				11.2	contents)		
misc.				2.0			
not accounted for				1.0			
mammals	92.2	37.1	61.7	65.0	Illinois/farm and woods	Knable, 1974	
birds	2.4	43.2	0.2	8.6			
arthropods	0.2	11.6	4.2	<0.1			
plants	4.6	6.3	31.1	26.1	(% wet weight; stomach		
unspecified/other	0.6	1.8	2.8	0.3	contents)		
rabbits	24.8	10.7	36.5	38.7	Missouri	Korschgen, 1959	
mice/rats	24.2	6.2	21.3	22.5			
other mammals	4.0	1.4	8.1	8.2	(% wet volume; stomach		
poultry	21.0	45.0	16.3	11.6	contents)		
carrion	12.9	13.0	6.5	7.4			
livestock	9.8	0.3	2.0	5.4			
birds	0.6	1.2	1.1	3.8			
invertebrates	trace	15.3	1.6	trace			
plant foods	2.7	6.9	6.6	2.1			
mammals				81.4	Maryland/Appalachian	Hockman & Chapman, 1983	
birds				4.8	Province (fall & winter)		
arthropods				2.8			
plants				7.0	(% wet weight; stomach		
unspecified/other				4.0	contents)		

Red Fox (*Vulpes vulpes*)

Population Dynamics	Age/Sex/ Cond./Seas.	Mean	Range	Location/Habitat	Reference	Note No.
Territory size (ha)	A B summer	1,611	277 - 3,420	nw British Columbia/ alpine and subalpine	Jones & Theberge, 1982	
	A M summer	1,967	514 - 3,420			
	A F summer	1,137	277 - 1,870			
	A F spring	699 ± 137 SD	596 - 855	ec Minnesota/woods, fields, swamp	Sargeant, 1972	
	A M all year	717		Wisconsin/diverse	Ables, 1969	
	A F all year	96	57 - 170			
Population Density (N/ha)	B B spring	0.001		Canada/northern boreal forests/arctic tundra	Voigt, 1987	
	B B spring	0.01		s Ontario, Canada/southern habitats	Voigt, 1987	
	B B		0.046 - 0.077	"good fox range" in North America	Ables, 1974	
Litter Size		5.5		s Wisconsin/farm, marsh, pasture	Pils & Martin, 1978	7
		6.8	2 - 9	Illinois/farm and woods	Storm et al., 1976	8
		6.7	3 - 12	Iowa/farm and woods	Storm et al., 1976	7
		4.2		upper Michigan/NS	Switzenberg, 1950	8
		4.1		North Dakota/prairie potholes	Allen, 1984	7
Litters/Year		1		NS/NS	Samuel & Nelson, 1982	
Days Gestation		51 - 54		New York/NS	Sheldon, 1949	9
Age at Weaning		8 - 10 weeks		NS/NS	Ables, 1974	
Age at Sexual Maturity	F	10 months		Illinois, Iowa/farm woods	Storm et al., 1976	

Red Fox (*Vulpes vulpes*)

Population Dynamics	Age/Sex/ Cond./Seas.	Mean	Range	Location/Habitat	Reference	Note No.
Annual Mortality Rates (percent)	B B	79.4		s Wisconsin/various	Pils & Martin, 1978	
	J M J F A F A B	83 81 74 77		Illinois/Iowa/ farms and woods	Storm et al., 1976	
Longevity		< 1.5 yrs	up to 6 yrs	NS/NS	Storm et al., 1976	
Seasonal Activity	**Begin**	**Peak**	**End**		**Reference**	**Note No.**
Mating	early Dec.	late January	late February	Iowa	Storm et al., 1976	
	late December	Jan. - Feb.	March	New York	Layne & McKeon, 1956; Sheldon, 1949	9
	late January		early February	southern Ontario, Canada	Voigt, 1987	
	February		March	northern Ontario, Canada	Voigt, 1987	
Parturition		March late March, April		southern CAN e North Dakota	Voigt, 1987 Sargeant, 1972	
Molt	April		June	NS/NS	Voigt, 1987	
Disperal	late September		March	Illinois, Iowa	Storm et al., 1976	

1 Estimated using extrapolation equation 3-45 (Boddington, 1978) and body weights from Storm et al. (1976) (Illinois).
2 Estimated using extrapolation equation 3-47 (Nagy, 1987) and body weights from Storm et al. (1976) (Illinois).
3 Food consumption of an adult pair for 11 days prior to whelping (i.e., parturition) and of the adult female for the first 4 weeks after whelping.
4 Estimated using extrapolation equation 3-17 (Calder and Braun, 1983) and body weights from Storm et al. (1976) (Illinois).
5 Estimated using extrapolation equation 3-20 (Stahl, 1967) and body weights from Storm et al. (1976) (Illinois).
6 Estimated using extrapolation equation 3-22 (Stahl, 1967) and body weights from Storm et al. (1976) (Illinois).
7 Litter size determined from embryo count. Using placental scars generally overestimates litter size, and counting live pups often underestimates litter size (Allen, 1983; Lindstrom, 1981).
8 Method of determining litter size not specified.
9 Cited in Samuel and Nelson (1982).

References (including Appendix)

Ables, E. D. (1969) Home range studies of red foxes (*Vulpes vulpes*). J. Mammal. 50: 108-120.

Ables, E. D. (1974) Ecology of the red fox in North America. In: Fox, M. W., ed. The wild canids. New York, NY: Van Nostrand Reinhold; pp. 148-163.

Allen, S. H. (1983) Comparison of red fox litter sizes determined from counts of embryos and placental scars. J. Wildl. Manage. 47: 860-863.

Allen, S. H. (1984) Some aspects of reproductive performance in the red fox in North Dakota. J. Mammal. 65: 246-255.

Allen, S. H.; Gulke, J. (1981) The effect of age on adult red fox body weights. Prairie Nat. 13: 97-98.

Asdell, S. A. (1946) Patterns of mammalian reproduction. Ithaca, NY: Comstock Publ. Co.

Boddington, M. J. (1978) An absolute metabolic scope for activity. J. Theor. Biol. 75: 443-449.

Burt, W. H.; Grossenheider, R. P. (1980) A field guide to the mammals of North America north of Mexico. Boston, MA: Houghton Mifflin Co.

Calder, W. A.; Braun, E. J. (1983) Scaling of osmotic regulation in mammals and birds. Am. J. Physiol. 244: R601-R606.

Cook, D. B.; Hamilton, W. J., Jr. (1944) The ecological relationship of red fox food in eastern New York. Ecology 24: 94-104.

Dalke, P. D.; Sime, P. R. (1938) Home and seasonal ranges of the eastern cottontail in Connecticut. Trans. N. Amer. Wildl. Conf. 3: 659-669.

Dekker, D. (1983) Denning and foraging habits of red foxes, *Vulpes vulpes*, and their interaction with coyotes, *Canis latrans*, in central Alberta. Can. Field-Nat. 97: 303-306.

Eadie, W. R. (1943) Food of the red fox in southern New Hampshire. J. Wildl. Manage. 7: 74-77.

Green, J. S.; Flinders, J. T. (1981) Diets of sympatric red foxes and coyotes in southeastern Idaho. Great Basin Nat. 41: 251-254.

Halpin, M. A.; Bissonette, J. A. (1983) Winter resource use by red fox (*Vulpes vulpes*) (abstract only). Trans. Northeast Sect. Wildl. Soc. 40: 158.

Hamilton, W. J., Jr. (1935) Notes on food of red foxes in New York and New England. J. Mammal. 16: 16-21.

Harris, S. (1979) Age-related fertility and productivity in red foxes, *Vulpes vulpes*, in suburban London. J. Zool. (London) 187: 195-199.

Harris, S.; Smith, G. C. (1987) Demography of two urban fox (*Vulpes vulpes*) populations. J. Appl. Ecol. 24: 75-86.

Hockman, J. G.; Chapman, J. A. (1983) Comparative feeding habits of red foxes (*Vulpes vulpes*) and gray foxes (*Urocyon cinereoargentus*) in Maryland. Am. Midl. Nat. 110: 276-285.

Hoffman, R. A.; Kirkpatrick, C. M. (1954) Red fox weights and reproduction in Tippecanoe County, Indiana. J. Mammal. 55: 504-509.

Johnson, W. J. (1970) Food habits of the red fox in Isle Royale National Park, Lake Superior. Am. Midl. Nat. 84: 568-572.

Johnson, D. H.; Sargeant, A. B. (1977) Impact of red fox predation on the sex ratio of prairie mallards. Washington, DC: U.S. Fish Wildl. Serv.; Wildl. Res. Rep. 6.

Jones, D. M.; Theberge, J. B. (1982) Summer home range and habitat utilization of the red fox (*Vulpes vulpes*) and gray foxes (*Urocyon cinereoargentus*) in Maryland. Am. Midl. Nat. 110: 276-285.

Keenan, R. J. (1981) Spatial use of home range among red foxes (*Vulpes vulpes*) in south-central Ontario. In: Chapman, J. A.; Pursley, D., eds. Worldwide furbearer conference proceedings, August, 1980; Frostburg, Maryland; pp. 1041-1063.

Knable, A. E. (1970) Food habits of the red fox (*Vulpes fulva*) in Union County, Illinois. Trans. Ill. State Acad. Sci. 63: 359-365.

Knable, A. E. (1974) Seasonal trends in the utilization of major food groups by the red fox (*Vulpes fulva*) in Union County, Illinois. Trans. Ill. State Acad. Sci. 66: 113-115.

Korschgen, L. J. (1959) Food habits of the red fox in Missouri. J. Wildl. Manage. 23: 168-176.

Kuehn, D. W.; Berg, W. E. (1981) Notes on movements, population statistics, and foods of the red fox in north-central Minnesota. Minn. Wildl. Res. Q. 41: 1-10.

Layne, J. N.; McKeon, W. H. (1956) Some aspects of red fox and gray fox reproduction in New York. N.Y. Fish and Game J. 3: 44-74.

Lindstrom, E. (1981) Reliability of placental scar counts in the red fox (*Vulpes vulpes* L.) with special reference to fading of the scars. Mammal Rev. 11: 137-49.

Llewellyn, L. M.; Uhler, F. M. (1952) The foods of fur animals of the Patuxent Research Refuge, Maryland. Am. Midl. Nat. 48: 193-203.

MacDonald, D. W. (1980) Social factors affecting reproduction amongst red foxes (*Vulpes vulpes* L. 1758). In: Zimen, E., ed. The red fox, biogeographica: v. 18. The Netherlands: W. Junk, The Hague; pp. 123-175.

MacDonald, D. W.; Voigt, D. R. (1985) The biological basis of rabies models. In: Bacon, P. J., ed. Population dynamics of rabies in wildlife. London, UK: Academic Press; pp. 71-107.

MacGregor, A. E. (1942) Late fall and winter foods of foxes in central Massachusetts. J. Wildl. Manage. 6: 221-224.

Major, J. T.; Sherburne, J. A. (1987) Interspecific relationships of coyotes, bobcats, and red foxes in western Maine. J. Wildl. Manage. 51: 606-616.

Maurel, D. (1980) Home range and activity rhythm of adult male foxes during the breeding season. In: Amlaner, C. J.; MacDonald, D. W., eds. A handbook on biotelemetry and radio tracking. Edmonds, WA: The Franklin Press; pp. 697-702.

Nagy, K. A. (1987) Field metabolic rate and food requirement scaling in mammals and birds. Ecol. Mono. 57: 111-128.

Nowak, R. M.; Paradiso, J. L. (1983) Foxes. In: Walker's mammals of the world. 4th ed. Baltimore, MD: Johns Hopkins University Press; pp. 932-980.

Palmer, E. L.; Fowler, H. S. (1975) Fieldbook of natural history. New York, NY: McGraw-Hill Book Co.

Phillips, R. L.; Andrews, R. D.; Storm, G. L.; et al. (1972) Dispersal and mortality of red foxes. J. Wildl. Manage. 36: 237-248.

Pils, C. M.; Martin, M. A. (1978) Population dynamics, predator-prey relationships and management of the red foxes in Wisconsin. Madison, WI: Wisc. Dept. Nat. Resour. Tech. Bull. No. 105; 56 pp.

Pils, C. M.; Martin, M. A.; Lange, E. (1981) Harvest, age structure, survivorship, productivity of red foxes in Wisconsin. Madison, WI: Wisc. Dept. Nat. Resour. Tech. Bull. No. 125; 19 pp.

Powell, D. G.; Case, R. M. (1982) Food habits of the red fox in Nebraska. Trans. Nebr. Acad. Sci. and Affil. Soc. 10: 13-16.

Preston, E. M. (1975) Home range defense in the red fox, *Vulpes vulpes* L. J. Mammal. 56: 645-652.

Richards, S. H.; Hine, R. L. (1953) Wisconsin fox populations. Madison, WI: Wisc. Cons. Dept. Tech. Wildl. Bull. No. 6; 78 pp.

Samuel, D. E.; Nelson, B. B. (1982) Foxes. In: Chapman, J. A.; Feldhammer, G. A., eds. Wild mammals of North America. Baltimore, MD: Johns Hopkins University Press; pp. 475-490.

Sargeant, A. B. (1972) Red fox spatial characteristics in relation to waterfowl predation. J. Wildl. Manage. 36: 225-236.

Sargeant, A. B. (1978) Red fox prey demands and implications to prairie duck production. J. Wildl. Manage. 42: 520-527.

Sargeant, A. B.; Pfeifer, W. K.; Allen, S. H. (1975) A spring aerial census of red foxes in North Dakota. J. Wildl. Manage. 39: 30-39.

Sargeant, A. B.; Allen, S. H.; Fleskes, J. P. (1986) Commercial sunflowers: food for red foxes in North Dakota. Prairie Nat. 18: 91-94.

Sargeant, A. B.; Allen, S. H.; Hastings, J. O. (1987) Spatial relations between sympatric coyotes and red foxes in North Dakota. J. Wildl. Manage. 51: 285-293.

Sargeant, A. B.; Allen, S. H.; Johnson, D. H. (1981) Determination of age and whelping dates of live red fox pups. J. Wildl. Manage. 45: 760-765.

Schoonmaker, W. J. (1938) Notes on mating and breeding habits of foxes in New York state. J. Mammal. 19: 375-376.

Scott, T. G. (1943) Some food coactions of the northern plains red fox. Ecol. Monogr. 13: 427-480.

Sheldon, W. G. (1949) Reproductive behavior of foxes in New York state. J. Mammal. 30: 236-246.

Stahl, W. R. (1967) Scaling of respiratory variables in mammals. J. Appl. Physiol. 22: 453-460.

Stanley, W. C. (1963) Habits of the red fox in northeastern Kansas. Univ. Kansas Mus. Nat. Hist. Misc. Pub. 34: 1-31.

Storm, G. L.; Ables, E. D. (1966) Notes on newborn and fullterm wild red foxes. J. Mammal. 47: 116-118.

Storm, G. L.; Andrews, R. D.; Phillips, R. L.; et al. (1976) Morphology, reproduction, dispersal and mortality of midwestern red fox populations. Wildl. Monogr. 49: 1-82.

Switzenberg, D. F. (1950) Breeding productivity in Michigan red foxes. J. Mammal. 31: 194-195.

Tullar, B. J. (1983) An unusually long-lived red fox. N.Y. Fish Game J. 30: 227.

Tullar, B. J., Jr.; Berchielli, L. T. (1980) Movement of the red fox in central New York. N.Y. Fish Game J. 27: 197-204.

Vogtsberger, L. M.; Barrett, G. W. (1973) Bioenergetics of captive red foxes. J. Wildl. Manage. 37: 495-500.

Voigt, D. R.; MacDonald, D. W. (1984) Variation in the spatial and social behaviour of the red fox, *Vulpes vulpes*. Acta Zool. Fenn. 171: 261-265.

Voigt, D. R.; Tinline, R. L. (1980) Strategies for analyzing radio tracking data. In: Amlaner, C. J., Jr.; MacDonald, D. W., eds. A handbook on biotelemetry and radio tracking. Oxford, United Kingdom: Pergamon Press; pp. 387-404.

Voigt, D. (1987) Red fox. In: Novak, M.; Baker, J. A.; Obbarel, M. E.; et al., eds. Wild furbearer management and conservation. Pittsburgh, PA: University of Pittsburgh Press; pp. 379-392.

Voigt, D. R.; Broadfoot, J. (1983) Locating pup-rearing dens of red foxes with radio-equipped woodchucks. J. Wildl. Manage. 47: 858-859.

2.2.3. Raccoon (raccoons, coatis, ringtails)

Order *Carnivora*, Family *Procyonidae*. Procyonids are medium-sized omnivores that range throughout much of North America. Raccoons, coatis, and ringtails feed on insects, small mammals, birds, lizards, and fruits. Ringtails are much smaller and more slender than raccoons and consume a higher proportion of animal matter (Kaufmann, 1982). Coatis are slightly smaller than racoons and are limited in their distribution in the United States to just north of the Mexican border.

Selected species

The raccoon (*Procyon lotor*) is the most abundant and widespread medium-sized omnivore in the North America. They are found throughout Mexico, Central America, the United States, except at the higher elevations of the Rocky Mountains, and into southern Canada (Kaufmann, 1982). During the last 50 years, raccoon populations in the United States have increased greatly (Sanderson, 1987). In suburban areas, they frequently raid garbage cans and dumps. Raccoons are preyed on by bobcats, coyotes, foxes, and great horned owls (Kaufmann, 1982). Twenty-five subspecies are recognized in the United States and Canada; however, most researchers do not identify the subspecies studied because different subspecies inhabit essentially nonoverlapping geographic ranges.

Body size. Raccoons measure from 46 to 71 cm with a 20 to 30 cm tail. Body weights vary by location, age, and sex from 3 to 9 kg (Kaufmann, 1982; Sanderson, 1987). The largest raccoons recorded are from Idaho and nearby states, while the smallest reside in the Florida Keys (Lotze and Anderson, 1979). Juveniles do not reach adult size until at least the end of their second year (Stuewer, 1943b). In the autumn, fat reserves account for 20 to 30 percent or more of the raccoon's weight (Whitney and Underwood, 1952, cited in Kaufmann, 1982). In Minnesota, Mech et al. (1968) found that juveniles gained weight almost linearly until mid-November, after which they began to lose weight until April. Weight loss in adults and yearlings can reach 50 percent during the 4 months of winter dormancy (e.g., 4.3-kg loss for a 9.1-kg raccoon) (Thorkelson and Maxwell, 1974; Mech et al., 1968). In Alabama, where raccoons are active all year, winter weight losses are less, 16 to 17 percent on average (Johnson, 1970).

Habitat. Raccoons are found near virtually every aquatic habitat, particularly in hardwood swamps, mangroves, floodplain forests, and freshwater and saltwater marshes (Kaufmann, 1982). They are also common in suburban residential areas and cultivated and abandoned farmlands (Kaufmann, 1982) and may forage in farmyards (Greenwood, 1982). Stuewer (1943a) stated that a permanent water supply, tree dens, and available food are essential. Raccoons use surface waters for both drinking and foraging (Stuewer, 1943a).

Food habits. The raccoon is an omnivorous and opportunistic feeder. Although primarily active from sunset to sunrise (Kaufmann, 1982; Stuewer, 1943a), raccoons will change their activity period to accommodate the availability of food and water (Sanderson, 1987). For example, salt marsh raccoons may become active during the day to take advantage of low tide (Ivey, 1948, cited in Sanderson, 1987). Raccoons feed primarily on fleshy fruits, nuts, acorns, and corn (Kaufmann, 1982) but also eat grains, insects, frogs,

crayfish, eggs, and virtually any animal and vegetable matter (Palmer and Fowler, 1975). The proportion of different foods in their diet depends on location and season, although plants are usually a more important component of the diet. They may focus on a preferred food, such as turtle eggs, when it is available (Stuewer, 1943a). They also will feed on garbage and carrion. Typically, it is only in the spring and early summer that raccoons eat more animal than plant material. Their late summer and fall diets consist primarily of fruits. In winter, acorns tend to be the most important food, although raccoons will take any corn or fruits that are still available (Kaufmann, 1982; Stuewer, 1943a).

Temperature regulation and molt. From the central United States into Canada, raccoons undergo a winter dormancy lasting up to 4 months (Stuewer, 1943a). It is not a true hibernation, however, and they can be easily awakened (Kaufmann, 1982). Animals in the south are active year-round (Goldman, 1950). Snow cover, more than low temperatures, triggers winter dormancy (Stuewer, 1943a; Mech et al., 1966; Kaufmann, 1982). The raccoon's annual molt begins early in spring and lasts about 3 months (Kaufmann, 1982).

Breeding activities and social organization. Although solitary, adult raccoons come together for a short time during the mating period (Kaufmann, 1982), which begins earlier (January to March) in their northern range than in their southern range (March to June) (Johnson, 1970; Sanderson, 1987). Male and female home ranges overlap freely and each male may mate with several females during the breeding season (Mech et al., 1966; Johnson, 1970; Kaufmann, 1982; Stuewer, 1943a). The most common group of raccoons is a mother and her young of that year. Further north in their range, a family will den together for the winter and break up the following spring (Kaufmann, 1982). Males are territorial toward one another but not toward females; females are not territorial (Fritzell, 1978).

Home range and resources. The size of a raccoon's home range depends on its sex and age, habitat, food sources, and the season (Sanderson, 1987). Values from a few hectares to more than a few thousand hectares have been reported, although home ranges of a few hundred hectares appear to be most common (see Appendix). In general, home ranges of males are larger than those of females, the home range of females with young is restricted, and winter ranges are smaller than ranges at other times of the year for both sexes (Sanderson, 1987). During the winter, raccoons commonly den in hollow trees; they also use the burrows of other animals such as foxes, groundhogs, skunks, and badgers. These sites are used for sleeping during warmer periods. After wintering in one den, the female will choose a new den in which to bear her young (Kaufmann, 1982). Schneider et al. (1971) found that once the cubs leave the den, the family will not use it again that year.

Population density. Population density depends on the quality and quantity of food resources and den sites. Values between 0.005 and 1.5 raccoons per hectare have been reported, although 0.1 to 0.2 per hectare is more common (see Appendix). Populations exceeding one raccoon per hectare have been reported in residential areas (Hoffman and Gottschang, 1977). Although raccoons may prefer tree dens over ground dens, particularly for raising young (Stuewer, 1943a), Butterfield (1954) found high raccoon densities in an area with few tree dens but numerous ground dens.

Population dynamics. Males generally are not sexually mature by the time of the first regular breeding season following their birth, but they may mature later that summer or fall (Johnson, 1970; Sanderson, 1951). Females may become pregnant in their first year (Johnson, 1970). In a review of several studies, Kaufmann (1982) found that up to 60 percent of both wild and captive females mate and produce litters in their first year. In Illinois and Missouri, Fritzell et al. (1985) found pregnancy rates of yearlings from 38 to 77 percent. After their first year, almost all females breed annually (Fritzell et al., 1985). Females produce only one litter each year, and the female alone cares for the young (Sanderson, 1987; Stuewer, 1943a, 1943b). With some exceptions (Bissonnette and Csech, 1937), larger litter sizes usually occur in the raccoon's northern range (Lotze and Anderson, 1979). Some juveniles of both sexes disperse from the areas where they were born during the fall or winter of their first year, while others stay and raise young within their parents' home range (Stuewer, 1943a). The highest mortality rates occur within the first 2 years; the age structure of populations in Alabama suggests that mortality is higher for subadults than for juveniles (Johnson, 1970).

Similar species (from general references)

- The coati (*Nasua nasua*) is slightly smaller than the raccoon (4 to 6 kg) but with a much longer tail (51 to 64 cm). Ranging throughout Central America from Panama to Mexico (Kaufmann, 1982), the coati is rare in the United States where it inhabits open forests of the southwest, near the Mexican border. It forages primarily for grubs and tubers but also feeds on fruits, nuts, bird eggs, lizards, scorpions, and tarantulas. Coatis roll arthropods on the ground to remove wings and scales.

- The ringtail (*Bassariscus astutus*) is smaller (36 to 41 cm; 0.9 to 1.13 kg) than the raccoon, with a tail equal to its body length. It ranges throughout the southwestern United States into northern California and Oregon, inhabiting chaparral, rocky ridges, and cliffs near water. Ringtails are omnivorous like the raccoon but consume a higher proportion of animal matter, feeding mainly on small mammals, insects, birds, and lizards as well as fruits. They den in caves or crevices along cliffs, hollow trees, under rocks, and in unused buildings. Although ringtails sometimes live in colonies, mated pairs are more common. More nocturnal than the raccoon, the ringtail is only active at dawn and dusk (Kaufmann, 1982).

General references

Burt and Grossenheider (1980); Goldman (1950); Johnson (1970); Kaufmann (1982); Palmer and Fowler (1975); Sanderson (1987).

Raccoon (*Procyon lotor*)

Factors	Age/Sex/ Cond./Seas.	Mean	Range or (95% CI)	Location	Reference	Note No.
Body Weight (kg)	A M	7.6	7.0 - 8.3	wc Illinois	Sanderson, 1984	
	A F parous	6.4	5.6 - 7.1			
	A F nulliparous	6.0	5.1 - 7.1			
	J M	5.1	4.6 - 5.7			
	J F	4.8	4.2 - 5.3			
	A M	6.76		Missouri	Nagel, 1943	
	A F	5.74				
	A M	4.31	up to 8.8	Alabama	Johnson, 1970	
	A F	3.67	up to 5.9			
	neonate	0.075		w New York/captive	Hamilton, 1936	
Pup Growth Rate (g/day)	birth to 7 days	17		w New York	Hamilton, 1936	
	8 to 19 days	21				
	20 to 30 days	11				
	31 to 40 days	12				
	41 to 50 days	23				
	birth to 6 wks	17.8		NS/lab	Montgomery, 1969	
	6 to 9 wks	3.9				
	10 to 16 wks	29.5				
Metabolic Rate (IO_2/kg-day)	Winter 15-35°C	9.36 ± 1.68 SD		Washington, DC/National Zoo	Mugaas et al., 1984	
Metabolic Rate (kcal/kg-day)	J B	304		Ohio/lab	Teubner & Barrett, 1983	
	A M basal	44.8			estimated	1
	A F basal	46.8				
	A M free-living	183	(83 - 400)		estimated	2
	A F free-living	187	(85 - 408)			
Food Ingestion Rate (g/g-day)						3

Raccoon (*Procyon lotor*)

Factors	Age/Sex/ Cond./Seas.	Mean	Range or (95% CI)	Location	Reference	Note No.
Water Ingestion Rate (g/g-day)	A M A F	0.082 0.083			estimated	4
Inhalation Rate (m^3/day)	A M A F	2.47 2.17			estimated	5
Surface Area (cm^2)	A M A F	3,796 3,414			estimated	6

Dietary Composition	Spring	Summer	Fall	Winter	Location/Habitat (measure)	Reference	Note No.
crayfish	37	8	3	9	Maryland/forested bottomland (% wet volume; digestive tract)	Llewellyn & Uhler, 1952	
snails	5	5	3	6			
insects	40	39	18	12			
reptiles/amphibians	6	5	3	7			
fish	3	2	trace	2			
rodents	7	2	trace	8			
corn	0	1	2	19			
Smilax	0	trace	trace	6			
acorns	0	trace	5	17			
pokeberry	0	trace	17	2			
wild cherry	0	17	2	0			
blackberries	0	16	trace	0			
grapes	0	trace	23	8			
persimmon	0	0	11	7			

Raccoon (*Procyon lotor*)

Dietary Composition	Spring	Summer	Fall	Winter	Location/Habitat (measure)	Reference	Note No.
frogs	8.1	trace	0	0	Tennessee/NS	Tabatabai & Kennedy, 1988	
fish	1.2	0	0	0			
birds	trace	0	trace	8.4	(% wet volume; digestive tract)		
mammals	1.7	0	1.4	0			
other/unspecified	7.8	6.7	1.8	7.2			
persimmon	0	35.8	57.3	27.4			
corn	57.6	0	10.0	25.9			
grapes	0	trace	10.2	0			
pokeberry	0	20.5	4.5	0			
acorns	0	0	5.4	4.2			
sugar hackberry	0	0	5.5	18.4			
cherry	0	29.5	0	0			
insects	22.0	3.5	2.4	trace			
crayfish	1.6	4.0	1.5	1.4			
Mollusca (mussels and oysters)		44			sw Washington/tidewater mudflats	Tyson, 1950	
Crustacea (shrimp & crabs)		25			(% wet volume; stomach contents)		
Pisces (goby & cabezon)		9					
Annelida (marine worms)		20					
Echiurida (worm)		1					
fruits		37.9			New York/NS	Hamilton, 1951	7
insects		8.2					
mammals		14.3			(% wet volume; stomach contents)		
grains (e.g. corn)		14.7					
earthworms		7.2					
amphibians		4.4					
vegetation		6.1					
reptiles		3.0					
molluscs		1.9					
birds		1.5					
carrion		1.5					
unspecified		0.2					

Raccoon (*Procyon lotor*)

Population Dynamics	Age/Sex/ Cond./Seas.	Mean	Range	Location/Habitat	Reference	Note No.
Home Range Size (ha)	A M spr./sum. A F spr./sum.	2,560 806	670 - 4,946 229 - 1,632	North Dakota/prairie potholes	Fritzell, 1978	8
	A M May - Dec A F May - Dec	204 108	18.2 - 814 5.3 - 376	Michigan/riparian	Stuewer, 1943a	
	A M all year A F all year	65 ± 18 SE 39 ± 16 SE		Georgia/coastal island	Lotze, 1979	9
Population Density (N/ha)	NS	1.46		Ohio/residential woods	Hoffman & Gottschang, 1977	
	spring	0.17		Lake Erie, Ohio/ Sandusky Bay, marsh	Urban, 1970	10
	spring	0.022		Wisconsin/marsh	Dorney, 1954	
Litter Size	1 to 3 yrs 4 yrs +	3.4 3.8		n Illinois/NS	Fritzell et al., 1985	
		2.43		Alabama/bottomlands, marsh	Johnson, 1970	
Litters /Year		1		most of range/NS	Sanderson, 1987	
Days Gestation		63		North America/NS	Hamilton, 1936; Sanderson, 1987; Stuewer, 1943b	
Age at Weaning (days)		84	63 - 112	NS/lab	Montgomery, 1969	
Age at Sexual Maturity	M	15 months		Alabama/NS	Johnson, 1970	
	F	1 year		IL, MO/NS	Fritzell et al., 1985	
Annual Mortality Rates (percent)	A B	56		Missouri/NS	Sanderson, 1951	11
	A B J B	38 42		sw Iowa/agricultural	Clark et al., 1989	

Raccoon (*Procyon lotor*)

Population Dynamics	Age/Sex/ Cond./Seas.	Mean	Range	Location/Habitat	Reference	Note No.
Longevity	A B A B	3.1 years 1.8 years		Alabama/NS Missouri/NS	Johnson, 1970 Sanderson, 1951	11
						Note No.
	February January	March February	August March	sw Georgia, nw Florida n United States	McKeever, 1958 Johnson, 1970	
	April April	early April May	May October	Michigan sw Georgia, nw Florida	Stuewer, 1943b McKeever, 1958	
		summer		northern latitudes	Goldman, 1950	
	late November		March/April	ec Minnesota	Whitney & Underwood, 1952	12

1 Estimated using equation 3-43 (Boddington, 1978) and body weights from Nagel (1943).
2 Estimated using equation 3-45 (Nagy, 1987) and body weights from Nagel (1943).
3 See Chapters 3 and 4 for methods for calculating food ingestion rates from free-living metabolic rate and diet.
4 Estimated using equation 3-17 (Calder and Braun, 1983) and body weights from Nagel (1943).
5 Estimated using equation 3-20 (Stahl, 1967) and body weights from Nagel (1943).
6 Estimated using equation 3-22 (Stahl, 1967) and body weights from Nagel (1943).
7 Collections from April through October.
8 Measured from April through July.
9 Based on radiotracking.
10 Average of three methods of estimating density.
11 Hunted population.
12 Cited in Schneider et al. (1971).

References (including Appendix)

Alexander, G. (1977) Food of vertebrate predators on trout waters in north central lower Michigan. Michigan Academician 10: 181-195.

Arthur, S. C. (1928) The fur animals of Louisiana. Louisiana Dept. Conserv.; Bull. No. 18.

Asdell, S. A. (1964) Patterns of mammalian reproduction. Ithaca, NY: Comstock Publ. Co.

Bailey, V. (1936) The mammals and life zones of Oregon. U.S. Dept. Agr., Bur. Biol. Survey, North Am. Fauna 55: 1-416.

Bissonnette, T. H.; Csech, A. G. (1937) Modification of mammalian sexual cycles. Part 7, fertile matings of raccoons in December instead of February induced by increasing daily periods of light. Proc. R. Soc. London, ser. B 827: 246-254.

Boddington, M. J. (1978) An absolute metabolic scope for activity. J. Theor. Biol. 75: 443-449.

Brown, C. E. (1936) Rearing wild animals in captivity, and gestation periods. J. Mammal. 17: 10-13.

Burt, W. H.; Grossenheider, R. P. (1980) A field guide to the mammals of North America north of Mexico. Boston, MA: Houghton Mifflin Co.

Butterfield, R. T. (1944) Populations, hunting pressure, and movement of Ohio raccoons. Trans. North Am. Wildl. Conf. 9: 337-344.

Butterfield, R. T. (1954) Some raccoon and groundhog relationships. J. Wildl. Manage. 18: 433-437.

Cagle, F. R. (1949) Notes on the raccoon, *Procyon lotor megalodous* Lowery. J. Mammal. 30: 45-47.

Calder, W. A.; Braun, E. J. (1983) Scaling of osmotic regulation in mammals and birds. Am. J. Physiol. 244: R601-R606.

Cauley, D. L.; Schinner, J. R. (1973) The Cincinnati raccoons. Nat. Hist. 82: 58-60.

Clark, W. R.; Hasbrouck, J. J.; Kienzler, J. M.; et al. (1989) Vital statistics and harvest of an Iowa raccoon population. J. Wildl. Manage. 53: 982-990.

Cowan, W. F. (1973) Ecology and life history of the raccoon (*Procyon lotor hirtus* Nelson and Goldman) in the northern part of its range [Ph.D. dissertation]. Grand Forks, ND: University of North Dakota.

Cunningham, E. R. (1962) A study of the eastern raccoon, *Procyon lotor* (L.), on the Atomic Energy Commission Savannah River Plant [master's thesis]. Athens, GA: University of Georgia.

Dew, R. D. (1978) Biology of the raccoon, *Procyon lotor*; I. Genic variation. II. Population age structure and average litter size [master's thesis]. Memphis, TN: Memphis State University.

Dorney, R. S. (1954) Ecology of marsh raccoons. J. Wildl. Manage. 18: 217-225.

Eisenberg, J. F. (1981) The mammalian radiations; an analysis of trends in evolution, adaptation, and behavior. Chicago, IL: University of Chicago Press.

Ewer, R. F. (1973) The carnivores. Ithaca, NY: Cornell University Press.

Flower, S. S. (1931) Contributions to our knowledge of the duration of life in vertebrate animals. V. Mammals. Zool. Soc. London. Proc. (part 1): 145-234.

Fritzell, E. K. (1978) Habitat use by prairie raccoons during the waterfowl breeding season. J. Wildl. Manage. 42: 118-127.

Fritzell, E. K.; Hubert, G. F., Jr.; Meyen, B. E.; et al. (1985) Age-specific reproduction in Illinois and Missouri raccoons. J. Wildl. Manage 49: 901-905.

Goldman, E. A. (1950) Raccoons of North and Middle America. Washington, DC: U.S. Fish Wildl. Serv.; North Am. Fauna 60.

Greenwood, R. J. (1982) Nocturnal activity and foraging of prairie raccoons (*Procyon lotor*) in North Dakota. Am. Midl. Nat. 107: 238-243.

Hamilton, W. J., Jr. (1936) The food and breeding habits of the raccoon. Ohio J. Sci. 36: 131-140.

Hamilton, W. J., Jr. (1940) The summer food of minks and raccoons on the Montezuma Marsh, New York. J. Wildl. Manage. 4: 80-84.

Hamilton, W. J., Jr. (1951) Warm weather foods of the raccoon in New York state. J. Mammal. 32: 341-344.

Hoffman, C. O.; Gottschang, J. L. (1977) Numbers, distribution, and movements of a raccoon population in a suburban residential community. J. Mammal. 58: 623-636.

Ivey, R. D. (1948) The raccoon in the salt marshes of northeastern Florida. J. Mammal. 29: 290-291.

Johnson, A. S. (1970) Biology of the raccoon (*Procyon lotor varius* Nelson and Goldman) in Alabama. Alabama Cooperative Wildlilfe Research Unit; Auburn Univ. Agric. Exp. Stn. Bull. 402.

Kaufmann, J. H. (1982) Raccoon and allies. In: Chapman, J. A.; Feldhamer, G. A., eds. Wild mammals of North America. Baltimore, MD: Johns Hopkins University Press; pp. 567-585.

Llewellyn, L. M.; Uhler, F. M. (1952) The foods of fur animals of the Patuxent Research Refuge, Maryland. Am. Midl. Nat. 48: 193-203.

Lotze, J.-H. (1979) The raccoon (*Procyon lotor*) on St. Catherines Island, Georgia. 4. Comparisons of home ranges determined by livetrapping and radiotracking. New York, NY: American Museum of Natural History; Rep. No. 2664.

Lotze, J.-H.; Anderson, S. (1979) *Procyon lotor*. American Society of Mammalogists; Mammalian Species No. 119.

Lowery, G. H., Jr. (1936) A preliminary report on the distribution of the mammals of Louisiana. Louisiana Acad. Sci. Proc. 3: 1-39.

McComb, W. C. (1981) Effects of land use upon food habits, productivity, and gastrointestinal parasites of raccoons. In: Chapman, J. A.; Pursley, D., eds. Proceedings worldwide furbearer conference: v. 1, August 1980; Frostburg, MD; pp. 642-651.

McKeever, S. (1958) Reproduction in the raccoon in the southeastern United States. J. Wildl. Manage. 22: 211.

Mech, L. D.; Tester, J. R.; Warner, D. W. (1966) Fall daytime resting habits of raccoons as determined by telemetry. J. Mammal. 47: 450-466.

Mech, L. D.; Barnes, D. M.; Tester, J. R. (1968) Seasonal weight changes, mortality, and population structure of raccoons in Minnesota. J. Mammal. 49: 63-73.

Montgomery, G. G. (1969) Weaning of captive raccoons. J. Wildl. Manage. 33: 154-159.

Moore, D. W.; Kennedy, M. L. (1985) Weight changes and population structure of raccoons in western Tennessee. J. Wildl. Manage. 49: 906-909.

Mugaas, J. N.; Mahlke, K. P.; Broudy, E.; et al. (1984) Metabolism of raccoons, *Procyon lotor*, in winter and summer (abstract only). Am. Zool. 24: 89A.

Nagel, W. O. (1943) How big is a 'coon. Missouri Conservationist 6-7.

Nagy, K. A. (1987) Field metabolic rate and food requirement scaling in mammals and birds. Ecol. Mono. 57: 111-128.

Palmer, E. L.; Fowler, H. S. (1975) Fieldbook of natural history. New York, NY: McGraw-Hill Book Co.

Sanderson, G. C. (1951) Breeding habits and a history of the Missouri raccoon population from 1941 to 1948. Trans. North Am. Wildl. Conf. 16: 445-461.

Sanderson, G. C. (1984) Cooperative raccoon collections. Ill. Nat. Hist. Survey Div.; Pittman-Robertson Proj. W-49-R-31.

Sanderson, G. C. (1987) Raccoon. In: Novak, M.; Baker, J. A.; Obbarel, M. E.; et al., eds. Wild furbearer management and conservation. Pittsburgh, PA: University of Pittsburgh Press; pp. 487-499.

Sanderson, G. C.; Hubert, G. F. (1981) Selected demographic characteristics of Illinois (U.S.A.) raccoons (*Procyon lotor*). In: Chapman, J. A.; Pursley, D., eds. Worldwide furbearer conference proceedings: v. 1. August 1980; Frostburg, Maryland.

Sanderson, G. C.; Nalbandov, A. V. (1973) The reproductive cycle of the raccoon in Illinois. Illinois Nat. Hist. Surv. Bull. 31: 29-85.

Schneider, D. G.; Mech, D. L.; Tester, J. R. (1971) Movements of female raccoons and their young as determined by radio-tracking. Anim. Behav. Monogr. 4: 1-43.

Schoonover, L. J.; Marshall, W. H. (1951) Food habits of the raccoon (*Procyon lotor hirtus*) in north-central Minnesota. J. Mammal. 32: 422-428.

Seton, E. T. (1929) Lives of game animals. Garden City, NJ: Doubleday, Doran and Company.

Sherfy, F. C.; Chapman, J. A. (1980) Seasonal home range and habitat utilization of raccoons in Maryland. Carnivore 3: 8-18.

Slate, D. (1980) A study of New Jersey raccoon populations--determination of the densities, dynamics and incidence of disease in raccoon populations in New Jersey. N.J. Div. Fish, Game, and Wildl.; Pittman-Robertson Proj. W-52-R-8, Final Rep.

Sonenshine, D. E.; Winslow, E. L. (1972) Contrasts in distribution of raccoons in two Virginia localities. J. Wildl. Manage. 36: 838-847.

Stahl, W. R. (1967) Scaling of respiratory variables in mammals. J. Appl. Physiol. 22: 453-460.

Stains, H. J. (1956) The raccoon in Kansas: natural history, management, and economic importance. Univ. Kansas Mus. Nat. Hist., Misc. Publ. 10: 1-76.

Stuewer, F. W. (1943a) Raccoons: their habits and management in Michigan. Ecol. Monogr. 13: 203-257.

Stuewer, F. W. (1943b) Reproduction of raccoons in Michigan. J. Wildl. Manage. 7: 60-73.

Tabatabai, F. R.; Kennedy, M. L. (1988) Food habits of the raccoon (*Procyon lotor*) in Tennessee. J. Tenn. Acad. Sci. 63: 89-94.

Tester, J. R. (1953) Fall food habits of the raccoon in the South Platte Valley of northeastern Colorado. J. Mammal. 34: 500-502.

Teubner, V. A.; Barrett, G. W. (1983) Bioenergetics of captive raccoons. J. Wildl. Manage. 47: 272-274.

Thorkelson, J.; Maxwell, R. K. (1974) Design and testing of a heat transfer model of a raccoon *(Procyon lotor)* in a closed tree den. Ecology 55: 29-39.

Tyson, E. L. (1950) Summer food habits of the raccoon in southwest Washington. J. Mammal. 31: 448-449.

Urban, D. (1970) Raccoon populations, movement patterns, and predation on a managed waterfowl marsh. J. Wildl. Manage. 34: 372-382.

VanDruff, L. W. (1971) The ecology of the raccoon and opossum, with emphasis on their role as waterfowl nest predators [Ph.D. dissertation]. Ithaca, NY: Cornell University.

Whitney, L. F.; Underwood, A. B. (1952) The raccoon. Orange, CT: Practical Science Publ.

Wood, J. E. (1954) Food habits of furbearers of the upland post oak region in Texas. J. Mammal. 35: 406-415.

Yeager, L. E.; Rennels, R. G. (1943) Fur yield and autumn foods of the raccoon in Illinois river bottom lands. J. Wildl. Manage. 7: 45-60.

2.2.4. Mink (mink, weasels, ermine)

Order *Carnivora*, Family *Mustelidae*. Although varied in size, most members of this family have long, slender bodies and short legs. Throughout the family, the male is usually larger than the female. The more terrestrial species feed primarily on small mammals and birds. Mustelids that live around lakes and streams feed on aquatic prey such as fish, frogs, and invertebrates (Burt and Grossenheider, 1980).

Selected species

The mink (*Mustela vison*) is the most abundant and widespread carnivorous mammal in North America. Mink are distributed throughout North America, except in the extreme north of Canada, Mexico, and arid areas of the southwestern United States. It is common throughout its range but often overlooked because of its solitary nature and nocturnal activity. Mink are particularly sensitive to PCBs and similar chemicals, and have been found to accumulate PCBs in subcutaneous fat to 38 to 200 times dietary concentrations, depending on the PCB congener (Hornshaw et al., 1983).

Body size. Body size varies greatly throughout the species' range, with males weighing markedly more than females (in some populations, almost twice as much, see table). Males measure from 33 to 43 cm with a 18 to 23 cm tail. Females measure from 30 to 36 cm with a 13 to 20 cm tail (Burt and Grossenheider, 1980). Farm-raised mink tend to be larger than wild mink (letter from R.J. Aulerich, Department of Animal Science, Michigan State University, East Lansing, MI, to Susan Norton, January 7, 1992).

Metabolism. Harper et al. (1978) evaluated the energy requirements of growing farm-raised male mink during a 21-day period when about 20 percent of their total growth would occur. They expressed food intake on the basis of metabolic body size (MBS) instead of body weight (BW) where $MBS = BW(kg)^{0.73}$. Metabolizable energy (ME) requirements were 147.8 ± 6.06 ($kcal/kg_{MBS}$-day). Accounting for assimilation efficiency, this corresponded to a gross energy (GE) intake of approximately 203 ($kcal/kg_{MBS}$-day).

Iversen (1972) found that basal metabolic rate for mink and other mustelids weighing 1 kg or more could be expressed by the equation:

$$BMR = 84.6Wt^{0.78} (\pm 0.15),$$

where BMR = basal metabolic rate in kcal/day and Wt = body weight in kilograms. This model reflects the finding that the larger mustelids have a slightly (10 to 15 percent) higher basal metabolic rate than expected for mammals in general.[f] Free-living metabolic rates would be expected to be three to five times higher (see table).

Habitat. Mink are found associated with aquatic habitats of all kinds, including waterways such as rivers, streams, lakes, and ditches, as well as swamps, marshes, and

---

[f]Mustelid species much smaller than 1 kg (i.e., the stoat and weasel) have much higher basal metabolic rates than predicted for mammals in general.

backwater areas (Linscombe et al., 1982). Mink prefer irregular shorelines to more open, exposed banks (Allen, 1986). They also tend to use brushy or wooded cover adjacent to the water, where cover for prey is abundant and where downfall and debris provide den sites (Allen, 1986).

Food habits. Mink are predominantly nocturnal hunters, although they are sometimes active during the day. Shorelines and emergent vegetation are the mink's principal hunting areas (Arnold, 1986, cited in Eagle and Whitman, 1987). Mink are opportunistic feeders, taking whatever prey is abundant (Hamilton, 1936, 1940; Errington, 1954; Sargeant et al., 1973). Mammals are the mink's most important prey year-round in many parts of their range (Eagle and Whitman, 1987), but mink also hunt aquatic prey such as fish, amphibians, and crustaceans and other terrestrial prey such as bird, reptiles, and insects, depending on the season (Linscombe et al., 1982). In marsh habitats in summer, muskrats can be an important food source depending on their population density and vulnerability (e.g., health) (Hamilton, 1940; Sealander, 1943; Errington, 1954). Mink diet also can depend on marsh water level; Proulx et al. (1987) found that with high water levels, mink captured predominantly crayfish and meadow voles, but during periods of low water, the mink preyed on aquatic birds and muskrats deeper in the marsh. Similarly, Errington (1939) found that mink predation on muskrats in the prairie pothole region can increase dramatically in times of drought as the muskrat burrows become more exposed. Also in this region, ducklings and molting adult ducks that frequent shorelines are particularly vulnerable to mink predation (Arnold and Fritzell, 1987; Sargeant et al., 1973). In winter, mink often supplement their diet with fish (Eagle and Whitman, 1987). Females tend to be limited to smaller prey than males, who are able to hunt larger prey such as rabbits and muskrats more successfully (Birks and Dunstone, 1985; Sealander, 1943).

Temperature regulation and molt. In winter, mink do not undergo hibernation or torpor; instead, they are active year-round. Mink replace their summer coat in mid to late fall with a darker more dense coat and molt again in the spring (Eagle and Whitman, 1987; Linscombe et al., 1982).

Breeding activities and social organization. Mating occurs in late winter to early spring (Eagle and Whitman, 1987). Variation in the length of mating season with different subspecies reflects adaptations to different climates (Linscombe et al., 1982). Ovulation is induced by mating, and implantation is delayed (Eagle and Whitman, 1987). Parturition generally occurs in the late spring, and the mink kits are altricial (helpless) at birth (Linscombe et al., 1982). Mink are generally solitary, with females only associating with their young of the year. Female home ranges generally do not overlap with the home ranges of other females, nor do the home ranges of males overlap with each other (Eagle and Whitman, 1987). The home range of a male may overlap the home range of several females, however, particularly during the breeding season (Eagle and Whitman, 1987).

Home range and resources. The home range of mink encompasses both their foraging areas around waterways and their dens. When denning, mink use bank burrows of other animals, particularly muskrats, as well as cavities in tree roots, rock or brush piles, logjams, and beaver lodges (Melquist et al., 1981; Birks and Linn, 1982; Eagle and Whitman, 1987). Individual mink may use several different dens within their home range, males more so than females (Birks and Linn, 1982). Melquist et al. (1981) found that den

sites in Idaho were 5 to 100 m from the water, and they never observed mink more than 200 m from water. The shape of mink home ranges depends on habitat type; riverine home ranges are basically linear, whereas those in marsh habitats tend to be more circular (Birks and Linn, 1982; Eagle and Whitman, 1987). Home range size depends mostly on food abundance, but also on the age and sex of the mink, season, and social stability (Arnold, 1986; Birks and Linn, 1982; Eagle and Whitman, 1987; Linn and Birks, 1981; Mitchell, 1961). In winter, mink spend more time near dens and use a smaller portion of their home range than in summer (Gerell, 1970, cited in Linscombe et al., 1982). Adult male home ranges are generally larger than adult female home ranges (Eagle and Whitman, 1987), particularly during the mating season when males may range over 1,000 ha (Arnold, 1986).

Population density. Population density depends on available cover and prey. Population densities typically range from 0.01 to 0.10 mink per hectare (see table). In riverine environments, it can be more meaningful to measure densities in terms of number of mink per unit length of shoreline covered rather than in terms of number per hectare.

Population dynamics. Mink reach sexual maturity at 10 months to a year and may reproduce for 7 years, possibly more (Enders, 1952; Ewer, 1973). Female mink can reproduce once per year and usually give birth to their first litters at the age of 1 year (Eagle and Whitman, 1987). Females often live to the age of 7 years in captivity (Enders, 1952).

Similar species (from general references)

- The long-tailed weasel (*Mustela frenata*) is smaller (males 23 to 27 cm, 200 to 340 g; females 20 to 23 cm, 85 to 200 g) than the mink. It is considered beneficial in agriculture because it kills small rodents, but it does not harm poultry. Although it does not range as far north as the mink, the long-tailed weasel does inhabit parts of the southwest.

- The least weasel (*Mustela nivalis*) is smaller than the mink (males 15 to 17 cm, 39 to 63 g; females 14 to 15 cm, 38 to 40 g) and inhabits meadows, fields, and wooded areas. The least weasel feeds extensively on mice and insects. Its habitat is limited to the north central United States and Canada.

- The ermine (*Mustela erminea*), or shorttail weasel, is smaller (males 15 to 17 cm, 71 to 170 g; females 13 to 19 cm, 28 to 85 g) than the mink. The ermine inhabits woody areas near water and feeds primarily on small mammals. The ermine's range is limited to the northern and western United States and Canada.

- The black-footed ferret (*Mustela nigripes*) is larger (36 to 46 cm; up to 1.1 kg) than the mink and inhabits western prairies in the United States, although it now is an endangered species. It feeds on prairie dogs and other small animals.

General references

Burt and Grossenheider (1980); Eagle and Whitman (1987); Hall (1981); Linscombe et al. (1982); Palmer and Fowler (1975).

Mink (*Mustela vison*)

Factors	Age/Sex/ Cond./Seas.	Mean	Range or (95% CI of mean)	Location	Reference	Note No.
Weight (g)	A M		< 2,300	western races	Harding, 1934	1
	A M		< 1,400	eastern races	Harding, 1934	1
	A M spring	1,734 ± 350 SD		Michigan (farm-raised)	Hornshaw et al., 1983	
	A F spring	974 ± 202 SD				
	A M summer	1,040		Montana	Mitchell, 1961	
	J M summer	777				
	A M fall	1,233				
	J M fall	952				
	A F summer	550		Montana	Mitchell, 1961	
	J F summer	533				
	A F fall	586				
	J F fall	582				
	neonate		6 - 10	NS	Eagle & Whitman, 1987	
	neonate	8.3 ± 1.54 SD		Michigan (farm-raised)	Hornshaw et al., 1983	
Pup Growth Rate (g/day)	0-30 days; M	7.0		NS/(farm-raised)	Wehr et al. (unpublished)	2
	31-90 d; M	21				
	91-120 d; M	15				
	121-150 d; M	9.0				
	151-180 d; M	4.3				
	0-30 days; F	6.5				
	31-90 d; F	13				
	91-120 d; F	6.7				
	121-150 d; F	1.7				
	151-180 d; F	0.6				

Mink (*Mustela vison*)

Factors	Age/Sex/ Cond./Seas.	Mean	Range or (95% CI of mean)	Location	Reference	Note No.
Metabolic Rate (kcal/kg-day)	A F basal	96			estimated	3
	A M basal	84				
	A F ranch cage	258		(farm-raised)	Farrell & Wood, 1968b	
	A F free-living	258	(110 - 507)		estimated	4
	A M free-living	236	(121 - 550)			
Food Ingestion Rate (g/g-day)	A M summer	0.13		(captive)	Arnold & Fritzell, 1987	5
	A M winter	0.12 ± 0.0048 SE		Michigan (farm-raised)	Bleavins & Aulerich, 1981	6
	A F winter	0.16 ± 0.0075 SE				
	A M yr-round	0.22			estimated	7
Water Ingestion Rate (g/g-day)	A F	0.11			estimated	8
	A M	0.099				
	A F	0.028		(farm-raised)	Farrell & Wood, 1968c	9
Inhalation Rate (m^3/day)	A F	0.33			estimated	10
	A M	0.55				
Surface Area (cm^2)	A F	743			estimated	11
	A M	1,120				

Dietary Composition	Spring	Summer	Fall	Winter	Location/Habitat (measure)		Note No.
ducks	5.2	32.5			Manitoba, Can/aspen parklands of prairie potholes	Arnold & Fritzell, 1987	
other birds	18.8	21.6					
eggs	3.3	14.5					
muskrats	42.0	2.1					
ground squirrels	14.2	0.5			(% dry weight in scats; male mink only)		
other mammals	15.5	25.3					
insects	1.0	3.5					

Mink (*Mustela vison*)

Dietary Composition	Spring	Summer	Fall	Winter	Location/Habitat (measure)	Reference	Note No.
(habitat/season)	(stream; year-round)		(river; year-round)		Michigan/stream, river	Alexander, 1977	
trout	52		56				
non-trout fish	6		26		(% wet weight; stomach contents)		
unidentified fish	3		3				
crustaceans	11		4				
amphibians	2		3				
birds/mammals	5		6				
vegetation	17		1				
unidentified	4		1				
(sex of mink)				(M) (F)	Michigan/NS	Sealander, 1943	12
muskrat				43 14			
cottontail				16 12	(% volume; stomach contents)		
small mammals				5 17			
large birds				18 11			
small birds				trace			
snakes				2 2			
frogs				10 37			
fish				5 4			
crayfish				1 3			
frogs				24.9	Missouri/statewide	Korschgen, 1958	
mice & rats				23.9			
fish				19.9			
rabbits				10.2	(% dry volume; stomach contents)		
crayfish				9.3			
birds				5.6			
fox squirrels				2.2			
muskrats				1.3			
other				2.7			

Mink (*Mustela vison*)

Population Dynamics	Age/Sex/ Cond./Seas.	Mean	Range	Location/Habitat	Reference	Note No.
Home Range Size			259 - 380 ha	North Dakota/prairie potholes	Eagle (unpublished)	13
	A M	770 ha		Manitoba, Canada/prairie potholes	Arnold & Fritzell, 1987	
				Montana/riverine:	Mitchell, 1961	
	A F		7.8 ha	heavy vegetation		
	A F		20.4 ha	sparse vegetation		
	A M	2.63 km	1.8 - 5.0 km	Sweden/stream	Gerell, 1970	1
	J M	1.23 km	1.1 - 1.4 km			
	A F	1.85 km	1.0 - 2.8 km			
Population Density		0.03 - 0.085 N/ha		Montana/river	Mitchell, 1961	
	A F winter	0.006 N/ha		Michigan/river	Marshall, 1936	14
	A F winter	0.6 N/km river				
Litter Size		4.2		Michigan/(farm-raised)	Hornshaw et al., 1983	
		4	2 - 8	Montana/river	Mitchell, 1961	
			4 - 10	North America/NS	Hall & Kelson, 1959	
Litters /Year		1		North America/NS	Hall & Kelson, 1959	
Days Gestation			39 - 76	North America/NS	Hall & Kelson, 1959	
		51	40 - 75	United States/(farm-raised)	Enders, 1952	
Age at Weaning	eat meat	37 days		Louisiana/NS	Svilha, 1931	14
	fully homeothermic	7 weeks		NS/NS	Kostron & Kukla, 1970	14
Age at Sexual Maturity	B	10 months		United States/(farm-raised)	Enders, 1952	
	B	1 year		NS/NS	Ewer, 1973	15
Longevity			maximum 10 years	NS/zoo	Eisenberg, 1981	
	F	7	maximum 11 years	NS/(farm-raised)	Enders, 1952	

Mink (*Mustela vison*)

Seasonal Activity	Begin	Peak	End	Location	Reference	Note No.
		April March fall		Alaska Montana Florida, Cypress Swamp	Burns, 1964 Mitchell, 1961 Humphrey & Zinn, 1982	14
	April		June	most areas (except south)	Eagle & Whitman, 1987	
		mid- to late fall		NS	Eagle & Whitman, 1987	

1 Cited in Linscombe et al. (1982).
2 Cited in NRC (1982).
3 Estimated using Iversen's (1972) model and summer body weights from Mitchell (1961); equation 3-43 (Boddington, 1978) and body weights from Mitchell (1961) yield slightly lower estimates (see text).
4 Estimated using equation 3-47 (Nagy 1987) and body weights from Mitchell (1961).
5 Arnold and Fritzell (1987) estimated that mink require 180 g of prey per day by assuming a male body mass of 1,420 g and using the model of Cowan et al. (1957) derived from measures of prey requirements for captive mink.
6 Diet of whole chicken (20 percent), commercial mink cereal (17 percent), ocean fish scraps (13 percent), and beef parts, cooked eggs, and powdered milk. Moisture content of feed = 66.2 percent.
7 Estimated using equation 3-47 (Nagy, 1987), summer body weights from Mitchell (1961), and dietary composition of Alexander (1977). See Chapter 4, Figure 4-7 for the calculations.
8 Estimated using equation 3-17 (Calder and Braun, 1983) and body weights from Mitchell (1961).
9 Diet contained 65 percent water.
10 Estimated using equation 3-20 (Stahl, 1967) and body weights from Mitchell (1961).
11 Estimated using equation 3-22 (Stahl, 1967) and body weights from Mitchell (1961).
12 Collected from fur buyers.
13 Cited in Allen (1986).
14 Cited in Eagle and Whitman (1987).
15 Cited in Eisenberg (1981).

References (including Appendix)

Alexander, G. (1977) Food of vertebrate predators on trout waters in north central lower Michigan. Michigan Academician 10: 181-195.

Allen, A. W. (1986) Habitat suitability index models: mink. U.S. Fish Wildl. Serv. Biol. Rep. 82(10.127).

Arnold, T. W. (1986) The ecology of prairie mink during the waterfowl breeding season [master's thesis]. Columbia, MO: University of Missouri.

Arnold, T. W.; Fritzell, E. K. (1987) Food habits of prairie mink during the waterfowl breeding season. Can. J. Zool. 65: 2322-2324.

Birks, J. D.; Dunstone, N. (1985) Sex-related differences in the diet of the mink *Mustela vison*. Holarctic Ecol. 8: 245-252.

Birks, J. D.; Linn, I. J. (1982) Studies of home range of the feral mink, *Mustela vison*. Symp. Zool. Soc. Lond. 49: 231-257.

Bleavins, M. R.; Aulerich, R. J. (1981) Feed consumption and food passage in mink (*Mustela vison*) and European ferrets (*Mustela putorius furo*). Lab. Anim. Sci. 31: 268-269.

Boddington, M. J. (1978) An absolute metabolic scope for activity. J. Theor. Biol. 75: 443-449.

Burgess, S. A.; Bider, J. R. (1980) Effects of stream habitat improvements on invertebrates, trout populations, and mink activity. J. Wildl. Manage. 44: 871-880.

Burns, J. J. (1964) The ecology, economics, and management of mink in the Yukon-Kuskokwim Delta, Alaska [master's thesis]. Anchorage, AK: University of Alaska.

Burt, W. H.; Grossenheider, R. P. (1980) A field guide to the mammals of North America north of Mexico. Boston, MA: Houghton Mifflin Co.

Calder, W. A.; Braun, E. J. (1983) Scaling of osmotic regulation in mammals and birds. Am. J. Physiol. 244: R601-R606.

Chanin, P. R.; Linn, I. (1980) The diet of the feral mink (*Mustela vison*) in southwest Britain. J. Zool. (London) 192: 205-223.

Cowan, I. M.; Wood, A. J.; Kitts, W. D. (1957) Feed requirements of deer, beaver, bear, and mink for growth and maintenance. Trans. North Am. Wildl. Conf. 22: 179-188.

Cowan, W. F.; Reilly, J. R. (1973) Summer and fall foods of mink on the J. Clark Salyer National Wildlife Refuge. Prairie Nat. 5: 20-24.

Eagle, T. C.; Whitman, J. S. (1987) Mink. In: Novak, M.; Baker, J. A.; Obbarel, M. E.; et al., eds. Wild furbearer management and conservation. Pittsburgh, PA: University of Pittsburgh Press; pp. 615-624.

Eberhardt, L. E. (1974) Food habits of prairie mink (*Mustela vison*) during the waterfowl breeding season [master's thesis]. St. Paul, MN: University of Minnesota.

Eisenberg, J. F. (1981) The mammalian radiations. Chicago, IL: University of Chicago Press.

Enders, R. K. (1952) Reproduction of the mink (*Mustela vison*). Proc. Am. Philos. Soc. 96: 691-755.

Errington, P. L. (1939) Reactions of muskrat populations to drought. Ecology 20: 168-186.

Errington, P. L. (1954) The special responsiveness of minks to epizootics in muskrat populations. Ecol. Monogr. 24: 377-393.

Ewer, R. F. (1973) The carnivores. Ithaca, NY: Cornell University Press.

Farrell, D. J.; Wood, A. J. (1968a) The nutrition of the female mink (*Mustela vison*). I. The metabolic rate of the mink. Can. J. Zool. 46: 41-46.

Farrell, D. J.; Wood, A. J. (1968b) The nutrition of the female mink (*Mustela vison*). II. The energy requirement for maintenance. Can. J. Zool. 46: 47-52.

Farrell, D. J.; Wood, A. J. (1968c) The nutrition of the female mink (*Mustela vison*). III. The water requirement for maintenance. Can. J. Zool. 46: 53-56.

Gerell, R. (1970) Home ranges and movements of the mink *Mustela vison* Schreber in southern Sweden. Oikos 20: 451-460.

Gilbert, F. F.; Nancekivell, E. G. (1982) Food habits of mink (*Mustela vison*) and otter (*Lutra canadensis*) in northeastern Alberta. Can. J. Zool. 60: 1282-1288.

Guilday, J. E. (1949) Winter food of Pennsylvania mink. Pennsylvania Game News 20: 12-32.

Hall, E. R. (1981) The mammals of North America. 2nd ed. New York, NY: John Wiley and Sons.

Hall, E. R.; Kelson, K. R. (1959) The mammals of North America. 1st ed. New York, NY: The Ronald Press Co.

Hamilton, W. J., Jr. (1936) Food habits of the mink in New York. J. Mammal. 17: 169.

Hamilton, W. J., Jr. (1940) The summer food of minks and raccoons on the Montezuma Marsh, New York. J. Wildl. Manage. 4: 80-84.

Hamilton, W. J., Jr. (1959) Foods of mink in New York. N.Y. Fish and Game J. 6: 77-85.

Harding, A. R. (1934) Mink trapping. Columbus, OH: A. R. Harding.

Harper, R. H.; Travis, H. F.; Glinsky; M. S. (1978) Metabolizable energy requirement for maintenance and body composition of growing farm raised male mink (*Mustela vison*). J. Nutr. 108: 1937-1943.

Hornshaw, T. C.; Aulerich, R. J.; Johnson, H. E. (1983) Feeding Great Lakes fish to mink: effects on mink and accumulation and elimination of PCBs by mink. J. Toxicol. Environ. Health 11: 933-946.

Humphrey, S. R.; Zinn, T. L. (1982) Seasonal habitat use by river otters and everglades mink. J. Wildl. Manage. 46: 375-381.

Iversen, J. A. (1972) Basal energy metabolism of mustelids. J. Comp. Physiol. 81: 341-344.

Korschgen, L. J. (1958) December food habits of mink in Missouri. J. Mammal. 39: 521-527.

Kostron, K.; Kukla, F. (1970) Changes in thermoregulation in mink kits within the 45 days of ontogenesis. Acta Univ. Agric., Facultas Agronomica, Sbornik Vysoke Skoly Zemedelske (Brunn) (rada A) 18: 461-469.

Linn, I. J.; Birks, J. D. (1981) Observations on the home ranges of feral American mink (*Mustela vison*) in Devon, England, as revealed by radio-tracking. In: Chapman, J. A.; Pursley, D., eds. Proceedings worldwide furbearer conference: v. 1. August 1980; Frostburg, MD; pp. 1088-1102.

Linscombe, G.; Kinler, N.; Aulerich, R. J. (1982) Mink. In: Chapman, J. A.; Feldhammer, G. A., eds. Wild mammals of North America. Baltimore, MD: Johns Hopkins University Press; pp. 329-643.

Marshall, W. H. (1936) A study of the winter activities of the mink. J. Mammal. 17: 382-392.

McCabe, R. A. (1949) Notes on live-trapping mink. J. Mammal. 30: 416-423.

McDonnell, J. A.; Gilbert, F. F. (1981) The responses of muskrats (*Ondatra zibethicus*) to water level fluctuations at Luther Marsh, Ontario. In: Chapman, J. A.; Pursley, D., eds. Proceedings worldwide furbearer conference: v. 1. August 1980; Frostburg, MD; pp. 1027-1040.

Melquist, W. E.; Whitman, J. S.; Hornocker, M. G. (1981) Resource partitioning and coexistence of sympatric mink and river otter populations. In: Chapman, J. A.; Pursley, D., eds. Proceedings worldwide furbearer conference: v. 1. August 1980; Frostburg, MD; pp. 187-220.

Mitchell, J. L. (1961) Mink movements and populations on a Montana river. J. Wildl. Manage. 25: 48-54.

Nagy, K. A. (1987) Field metabolic rate and food requirement scaling in mammals and birds. Ecol. Monogr. 57: 111-128.

National Research Council (NRC) (1982) Nutrient requirements of mink and foxes. In: Nutrient requirements of domestic animals series, No. 7. Washington, DC: National Academy of Sciences, National Academy Press.

Palmer, E. L.; Fowler, H. S. (1975) Fieldbook of natural history. New York, NY: McGraw-Hill Book Co.

Pendleton, G. W. (1982) A selected annotated bibliography of mink behavior and ecology. Brookings, SD: South Dakota State University; Tech. Bull. No. 3.

Perel'dik, N. S.; Milovanov, L. V.; Erin, A. T. (1972) Feeding fur bearing animals. Washington, DC: Translated from Russian by the Agricultural Research Service, U.S. Department of Agriculture and the National Science Foundation.

Proulx, G.; McDonnell, J. A.; Gilbert, F. F. (1987) The effect of water level fluctuations on muskrat, *Ondatra zibethicus*, predation by mink, *Mustela vison*. Can. Field-Nat. 101: 89-92.

Sargeant, A. B.; Swanson, G. A.; Doty, H. (1973) Selective predation by mink, *Mustela vison*, on waterfowl. Am. Midl. Nat. 89: 208-214.

Sealander, J. A. (1943) Winter food habits of mink in southern Michigan. J. Wildl. Manage. 7: 411-417.

Stahl, W. R. (1967) Scaling of respiratory variables in mammals. J. Appl. Physiol. 22: 453-460.

Svilha, A. (1931) Habits of the Louisiana mink (*Mustela vison vulgivagus*). J. Mammal. 12: 366-368.

Williams, T. M. (1980) A comparison of running and swimming energetics in the mink (abstract). Am. Zool. 20: 909.

Williams, T. M. (1983) Locomotion in the North American mink, a semi-aquatic mammal. I. Swimming energetics and body drag. J. Exp. Biol. 103: 155-168.

2.2.5. River Otter

Order *Carnivora*, Family *Mustelidae*. Mustelids have long, slender bodies, short legs, and anal scent glands. Throughout the family, the male is usually larger than the female. The more terrestrial species of this family occupy various habitats and feed primarily on small mammals and birds. Mustelids that live around lakes and streams feed primarily on aquatic species such as fish, frogs, and invertebrates (Palmer and Fowler, 1975; Burt and Grossenheider, 1980).

Selected species

The northern river otter (*Lutra canadensis*) historically lived in or near lakes, marshes, streams, and seashores throughout much of the North American continent (Hall, 1981). Currently, many populations along the coastal United States and Canada are stable or increasing, but this species is rare or extirpated throughout much of the midwestern United States (Toweill and Tabor, 1982). The river otter dens in banks and hollow logs. Individuals range over large areas daily, feeding primarily on fish. Although otters have few natural predators, while on land, they may be taken by coyotes, fox, or dogs (Melquist and Hornocker, 1983). Otters clean themselves frequently by rubbing and rolling in any dry surface (Toweill and Tabor, 1982). Otters appear to undergo bradycardia while submerged and can stay underwater for up to 4 minutes (Melquist and Dronkert, 1987). Because of its piscivorous diet and high trophic level, the river otter is a noteworthy indicator of bioaccumulative pollution in aquatic ecosystems (Melquist and Dronkert, 1987).

Body size. River otters measure 66 to 76 cm with a 30 to 43 cm tail. Sexual dimorphism in size is seen among all subspecies (Harris, 1968; van Zyll de Jong, 1972, cited in Toweill and Tabor, 1982), and adult males (5 to 10 kg) outweigh females (4 to 7 kg) by approximately 17 percent (Melquist and Hornocker, 1983; see Table). Full adult weight generally is not attained until sexual maturity after 2 years of age (Melquist and Hornocker, 1983). Along the Pacific Coast, there is some evidence that size decreases from north to south (Toweill and Tabor, 1982).

Metabolism. Iversen (1972) found that basal metabolic rate of otters and other mustelids weighing 1 kg or more could be expressed by the equation:

$$BMR = 84.6Wt^{0.78} (\pm 0.15),$$

where BMR = basal metabolic rate in kcal/day and Wt = body weight in kilograms. Free-living metabolic rates would be expected to be three to five times higher (see table).

Habitat. Almost exclusively aquatic, the river otter is found in freshwater, estuarine, and some marine environments all the way from coastal areas to mountain lakes (Toweill and Tabor, 1982). They are found primarily in food-rich coastal areas, such as the lower portions of streams and rivers, estuaries, nonpolluted waterways, the lakes and tributaries that feed rivers, and areas showing little human impact (Mowbray et al., 1979; Tabor and Wight, 1977).

Food habits. Otters usually are active in the evening and from dawn to midmorning, although they can be active any time of day (Melquist and Hornocker, 1983). The bulk of the river otter's diet is fish; however, otters are opportunistic and will feed on a variety of prey depending on availability and ease of capture. River otters take different fish species according to their availability and how well the fish can escape capture (Loranger, 1981). Depending on availability, otters also may consume crustaceans (especially crayfish), aquatic insects (e.g., stonefly nymphs, aquatic beetles), amphibians, insects, birds (e.g., ducks), mammals (e.g., young beavers), and turtles (Burt and Grossenheider, 1980; Lagler and Ostenson, 1942; Liers, 1951b; Melquist and Hornocker, 1983; Palmer and Fowler, 1975; Toweill and Tabor, 1982). Gilbert and Nancekivell (1982) observed that otters consume more waterfowl in the northerly latitudes than in the south, probably because of the ease of capturing the waterfowl during their molt in the north. Otters probe the bottoms of ponds or streams for invertebrates and may ingest mud or other debris in the process (Liers, 1951b). Otters in captivity required 700-900 g of food daily (Harris, 1968, cited in Toweill and Tabor, 1982).

Temperature regulation and molt. Seasonal patterns in otters are not well understood. Otters are active throughout the year (Toweill and Tabor, 1982), with the most intense activity levels during the winter (Larsen, 1983; Melquist and Hornocker, 1983). They undergo a gradual molt in spring and fall (Melquist and Dronkert, 1987).

Breeding activities and social organization. Adult males are usually solitary; an adult female and two or three pups make up a typical family group (Melquist and Dronkert, 1987). River otters breed in late winter or early spring over a period of 3 months or more. Birth of a litter follows mating by about 1 year; however, implantation is delayed for approximately 10 months, and active gestation lasts only 2 months (Pearson and Enders, 1944, cited in Toweill and Tabor, 1982; Melquist and Dronkert, 1987). Newborn otters are born blind but fully furred and depend on their mother for milk until 3 to 5 months of age (Johnstone, 1978; Liers, 1951b). Family groups disperse about 3 months after the pups are weaned (Melquist and Hornocker, 1983).

Home range and resources. The river otter's home range encompasses the area needed for foraging and reproduction (Melquist and Dronkert, 1987). The shape of the home range varies by habitat type; for example, near rivers or coastal areas, it may be a long strip along the shoreline (measured in kilometers), but in marshes or areas with many small streams, the home range may resemble a polygon (measured in hectares; Melquist and Dronkert, 1987). All parts of a home range are not used equally; instead, several activity centers may be interconnected by a stream or coast (Melquist and Hornocker, 1983). Food has the greatest influence on habitat use, but adequate shelter in the form of temporary dens and resting sites also plays a role (Anderson and Woolf, 1987a; Melquist and Hornocker, 1983). River otters use dens dug by other animals or natural shelters such as hollow logs, logjams, or drift piles (Toweill and Tabor, 1982; Melquist and Dronkert, 1987). Beaver bank dens and lodges accounted for 38 percent of resting sites used by radio-tracked otters in Idaho (Melquist and Hornocker, 1983). River otters appear to prefer flowing water habitats (e.g., streams) over more stationary water (e.g., lakes, ponds) (Idaho study; Melquist and Hornocker, 1983).

River otters maintain distinct territories within their home ranges: females maintain a feeding area for their families, males for breeding purposes (Toweill and Tabor, 1982). Individuals tend to avoid confrontation through mutual avoidance (Melquist and Hornocker, 1983). Home ranges are most restricted for lactating females (Melquist and Dronkert, 1987). Adult and subadult males have larger, more variable home ranges than females.

Population density. River otter populations show variable spacing in relation to prey density and habitat (Hornocker et al., 1983). This characteristic, along with their secretive habits and use of several den sites, makes it difficult to estimate river otter populations (Melquist and Dronkert, 1987). Population density of otters often is expressed in terms of number per kilometer of waterway or coastline because of their dependence on aquatic habitats. Densities between one otter every kilometer to one otter every 10 km of river or shoreline are typical (see table).

Population parameters. Otters generally are not sexually mature until 2 years of age (Liers, 1951b; Hamilton and Eadie, 1964; Tabor and Wight, 1977; Lauhachinda, 1978). Adult females appear to reproduce yearly in Oregon (based on a pregnancy rate of almost 100 percent; Tabor and Wight, 1977), but Lauhachinda (1978) concluded that they breed every other year in Alabama and Georgia. Litters usually consist of two to three pups, although litters as large as six pups occur (see table). As adults, river otter mortality rates are low, between 15 and 30 percent per year (Lauhachinda, 1978; Tabor and Wight, 1977).

Similar species (from general references)

- The sea otter (*Enhydra lutris*) (76 to 91 cm body and 28 to 33 cm tail; weight 13 to 38 kg) inhabits kelp beds and rocky shores from the Aleutian Islands to California. Its diet includes fish, abalones, sea urchins, and other marine animals.

General references

Burt and Grossenheider (1980); Melquist and Dronkert (1987); Palmer and Fowler (1975); Toweill and Tabor (1982).

River Otter (*Lutra canadensis*)

Factors	Age/Sex/ Cond./Seas.	Mean	Range or (95% CI of mean)	Location	Reference	Note No.
Weight (kg)	A B		5.0 - 15	throughout range	Melquist & Dronkert, 1987	1
	A M	8.13 ± 1.15 SD	5.84 - 10.4	Alabama, Georgia	Lauhachinda, 1978	
	A F	6.73 ± 1.00 SD	4.74 - 8.72			
	Y M	6.36 ± 0.98 SD	4.41 - 8.31			
	Y F	5.83 ± 1.82 SD	3.75 - 7.01			
	A M	9.20 ± 0.6 SE		wc Idaho	Melquist & Hornocker, 1983	
	A F	7.90 ± 0.2 SE				
	Y M	7.90 ± 0.4 SE				
	Y F	7.20 ± 0.1 SE				
	neonate	0.132		New York	Hamilton & Eadie, 1964	
	neonate	0.140 to 0.145		Alabama, Georgia	Hill & Lauhachinda, 1981	
Pup Growth Rate (g/day)	10 to 20 days	26.7		NS	Liers, 1951a	2
Metabolic Rate (kcal/kg-day)	A F basal	44.8			estimated	3
	A M basal	42.6				
	A F free-living	183	(83 - 400)		estimated	4
	A M free-living	178	(81 - 391)			
Food Ingestion Rate (g/g-day)						5
Water Ingestion Rate (g/g-day)	A F	0.082			estimated	6
	A M	0.080				
Inhalation Rate (m^3/day)	A F	2.5			estimated	7
	A M	2.9				
Surface Area (cm^2)	A F	3,785			estimated	8
	A M	4,280				

River Otter (*Lutra canadensis*)

Dietary Composition	Spring	Summer	Fall	Winter	Location/Habitat (measure)	Reference	Note No.
fish	100	93	97	99	wc Idaho/mountain streams and lakes	Melquist & Hornocker, 1983	
(sucker)	(52)	(47)	(17)	(30)			
(sculpins)	(40)	(31)	(38)	(42)			
(squawfish)	(5)	(4)	(1)	(6)	(percent frequency of occurrence in scats)		
(perch)	(22)	(3)	(7)	(9)			
(whitefish)	(21)	(10)	(24)	(66)			
invertebrates	2	7	10	12	(most of the fish were longer than 30 cm)		
birds	<1	12	1	<1			
mammals	1	4	3	1			
reptiles	0	1	0	0			
invertebrates	41.6	44.2	33.3	26.3	nw Montana/ lakes and streams	Greer, 1955	
(aquatic insects)	19.6	19.2	10.7	4.0			
(fr water shrimp)	14.3	8.9	10.7	4.0			
fishes	91.4	92.9	100	100	(percent frequency of occurrence in scats)		
(trout)	23.7	9.8	33.3	29.3			
(sculpin)	20.5	20.9	21.3	25.3			
(sunfish)	47.1	72.8	60.0	33.3			
frog	19.6	19.2	10.7	9.1			
salamander	0.3	0.7	1.3	–			
snake	0.2	0.7	–	–			
birds	6.7	4.1	1.3	1			
mammals	8.1	5.3	2.7	4.0			
fish	97	69	98	99	nw Illinois/Mississippi River	Anderson & Woolf, 1987b	
(sunfish)	(31)	(31)	(80)	(52)			
(minnow/carp)	(52)	(0)	(17)	(44)	(percent frequency of occurrence in scats)		
(herring)	(49)	(38)	(10)	(40)			
(bass)	(26)	(0)	(5)	(14)			
frogs	3	6	11	16			
crayfish	12	50	8	7			
dragonfly nymphs	2	0	6	2			
birds	4	13	3	1			

River Otter (*Lutra canadensis*)

Dietary Composition	Spring	Summer	Fall	Winter	Location/Habitat (measure)	Reference	Note No.
game & pan fish	32				Michigan/habitat NS	Lagler & Ostenson, 1942	
forage fish	17.6						
fish remains	3.0				(% volume; stomach contents)		
amphibians	16.1						
other invertebrates	25.8						

Population Dynamics			Range		Reference	Note No.
Home Range Size (ha or km river)	A B		400 - 1,900 ha	Missouri/marsh, streams	Erickson et al., 1984	9
	A B		2,900 - 5,700 ha	Colorado (fall-spr)/NS	Mack, 1985	9
	A M	400 ha		se Texas/coastal marsh	Foy, 1984	9
	A F	295 ha				
	yearling M	43 ± 20 SD km	10 - 78 km	wc Idaho/river drainage (no trends seen with season)	Melquist & Hornocker, 1983	
	yearling F	32 ± 6.2 SD km	25 - 40 km			
	adult F	31 ± 9.2 SD km	23 - 50 km			
	B B	28 ± 7.5 SD km	15 - 39 km			
Population Density (N/ha or N/km shoreline)	B B	0.26/km	0.17 - 0.37/km	wc Idaho/river drainage	Melquist & Hornocker, 1983	
	A F breeding	0.05/km				
	A M breeding	0.019/km				
	yearling B	0.071/km				
	B B	0.85/km		se Alaska/coastal - island	Woolington, 1984	9
	B B		0.0094 - 0.014 /ha	se Texas/coastal marsh	Foy, 1984	9
	A B	0.0025/ha		Missouri/marsh, streams	Erickson et al., 1984	9

River Otter (*Lutra canadensis*)

Population Dynamics	Age/Sex/ Cond./Seas.	Mean	Range	Location/Habitat	Reference	Note No.
Litter Size		2.73 ± 0.77 SD	1 - 4	Maryland/wetlands	Mowbray et al., 1979	10
		2.68 ± 0.71 SD	1 - 4	Alabama, Georgia/NS	Hill & Lauhachinda, 1981	
		2.1 ± 0.7 SD		New York/NS	Hamilton & Eadie, 1964	
	1 yr old	0.53 ± 0.91 SD	0 - 3	Maine/NS	Docktor et al., 1987	11
	2 yr old	0.87 ± 0.96 SD	0 - 3			
	3 yr old	1.60 ± 1.42 SD	0 - 4			
	4 yr old	2.29 ± 1.25 SD	1 - 5			
	5 to 12 yrs old	2.67 ± 1.40 SD	0 - 6			
Litters /Year		1		NS	Trippensee, 1953	
Days Gestation	total		290 - 380	Wisconsin/captive	Liers, 1951b	12
	active	60-63		NS	Lancia & Hair, 1983	13
Age at Weaning			> 90 days	NS	Harris, 1968	
Age at Sexual Maturity	F	2 yrs		New York/NS	Hamilton & Eadie, 1964	
	M	2 yrs				
Annual Mortality Rates (percent)	birth - 1 yr	32		Oregon/NS	Tabor & Wight, 1977	
	1 - 2 yrs	54				
	2 - 11 yrs	27				
	A M	17.8		Alabama, Georgia/riverine	Lauhachinda, 1978	
	A F	20.3				
Longevity	A B		< 15 yrs	Alabama, Georgia/riverine	Lauhachinda, 1978	

River Otter (*Lutra canadensis*)

Seasonal Activity	Begin	Peak	End	Location	Reference	Note No.
Mating	January March winter	March to April late winter	May April spring	Michigan New York AL, FL, GA	Hooper & Ostenson, 1949 Hamilton & Eadie, 1964 Lauhachinda, 1978	14
Parturition	mid-March late March late January		mid-May early April May	Maryland, Chesapeake Bay wc Idaho Alabama	Mowbray et al., 1979 Melquist & Hornocker, 1983 Lauhachinda, 1978	
Dispersal		April to May		wc Idaho	Melquist & Hornocker, 1983	15

1 Summary of studies discussed by Hall (1981) and Woolington (1984).
2 Cited in Toweill and Tabor (1982).
3 Estimated using equation 3-43 (Boddington, 1978) and adult body weights from Lauhachinda (1978).
4 Estimated using equation 3-47 (Nagy, 1987) and adult body weights from Lauhachinda (1978).
5 See Chapters 3 and 4 for methods of estimating food ingestion rates.
6 Estimated using equation 3-17 (Calder and Braun, 1983) and adult body weights from Lauhachinda (1978).
7 Estimated using equation 3-20 (Stahl, 1967) and adult body weights from Lauhachinda (1978).
8 Estimated using equation 3-22 (Stahl, 1967) and adult body weights from Lauhachinda (1978).
9 Cited in Melquist and Dronkert (1987).
10 Determined from implanted embryo counts.
11 Determined from corpora lutea counts.
12 Total gestation period (including preimplantation).
13 Active gestation period (postimplantation), cited in Melquist and Dronkert (1987).
14 Cited in Toweill and Tabor (1982).
15 Dispersal at age 12 to 13 months.

References (including Appendix)

Alexander, G. (1977) Food of vertebrate predators on trout waters in north central lower Michigan. Michigan Academician 10: 181-195.

Anderson, K. L. (1981) Population and reproduction characteristics of the river otter in Virginia and tissue concentrations of environmental contaminants [master's thesis]. Blacksburg, VA: Virginia Polytechnic Institute.

Anderson, K. L.; Scanlon, P. F. (1981) Reproduction and population characteristics of river otters in Virginia. Virginia J. Sci. 32: 87.

Anderson, E. A.; Woolf, A. (1987a) River otter habitat use in northwestern Illinois. Trans. Illinois Acad. Sci. 80: 107-114.

Anderson, E. A.; Woolf, A. (1987b) River otter food habits in northwestern Illinois. Trans. Illinois Acad. Sci. 80: 115-118.

Boddington, M. J. (1978) An absolute metabolic scope for activity. J. Theor. Biol. 75: 443-449.

Burt, W. H.; Grossenheider, R. P. (1980) A field guide to the mammals of North America north of Mexico. Boston, MA: Houghton Mifflin Co.

Calder, W. A.; Braun, E. J. (1983) Scaling of osmotic regulation in mammals and birds. Am. J. Physiol. 244: R601-R606.

Chabreck, R. H.; Holcombe, J. E.; Linscombe, R. G.; et al. (1982) Winter foods of river otters from saline and fresh environments in Louisiana. Proc. Annu. Conf. Southeast Assoc. Fish Wildl. Agencies 36: 473-483.

Docktor, C. M.; Bowyer, T. R.; Clark, A. G. (1987) Number of corpora lutea as related to age and distribution of river otter in Maine. J. Mammal. 68: 182-185.

Eisenberg, J. F. (1981) The mammalian radiations; an analysis of trends in evolution, adaptation, and behavior. Chicago, IL: University of Chicago Press.

Erickson, D. W.; McCullough, C. R.; Porath, W. R. (1984) River otter investigations in Missouri. Missouri Dept. Conserv.; Pittman-Robertson Proj. W-13-R-38, Final Report.

Foy, M. K. (1984) Seasonal movement, home range, and habitat use of river otter in southeastern Texas [master's thesis]. College Station, TX: Texas A&M University.

Gilbert , F. F.; Nancekivell, E. G. (1982) Food habits of mink (*Mustela vison*) and otter (*Lutra canadensis*) in northeastern Alberta. Can. J. Zool. 60: 1282-1288.

Greer, K. R. (1955) Yearly food habits of the river otter in the Thompson Lakes region, Northwestern Montana, as indicated by scat analyses. Am. Midl. Nat. 54: 299-313.

Greer, K. R. (1956) Fur resources and investigations: study of the otter food habits along a segment of the Gallatin River. Montana Fish and Game Dept.; Job Comp. Rep. W-049-R-06:35-59.

Grenfell, W. E., Jr. (1974) Food habits of the river otter in Suisin Marsh, central California [master's thesis]. Sacramento, CA: California State University.

Grinnell, J.; Dixon, J. S.; Linsdale, J. M. (1937) Fur-bearing mammals of California. Berkeley, CA: University of California Press.

Hall, E. R. (1981) The mammals of North America. 2nd ed. New York, NY: John Wiley and Sons.

Hall, E. R.; Kelson, K. R. (1959) The mammals of North America. 1st ed. New York, NY: The Ronald Press Co.

Hamilton, W. J., Jr. (1961) Late fall, winter and early spring foods of 141 otters from New York. N. Y. Fish and Game J. 8: 106-109.

Hamilton, W. J., Jr.; Eadie, W. R. (1964) Reproduction in the otter, *Lutra canadensis*. J. Mammal. 45: 242-252.

Harris, C. J. (1968) Otters: a study of the recent Lutrinae. London, U.K.: Weidenfield & Nicolson.

Harris, J. (1969) Breeding the Canadian otter *Lutra c. canadensis* in a private collection. Int. Zoo Yearbook 9: 90-91.

Hill, E. P.; Lauhachinda, V. (1981) Reproduction in river otters from Alabama and Georgia. In: Chapman, J. A.; Pursley, D., eds. Proceedings worldwide furbearer conference: v. 1. August 1980; Frostburg, MD.

Hooper, E. T.; Ostenson, B. T. (1949) Age groups in Michigan otter. Ann Arbor, MI: University of Michigan; Mus. Zool. Occas. Pap. 518.

Hornocker, M. G.; Messick, J. P.; Melquist, W. E. (1983) Spacial strategies in three species of Mustelidae. Acta Zool. Fenn. 174: 185-188.

Humphrey, S. R.; Zinn, T. L. (1982) Seasonal habitat use by river otters and Everglades mink. J. Wildl. Manage. 46: 375-381.

Iversen, J. A. (1972) Basal energy metabolism of Mustelids. J. Comp. Physiol. 81: 341-344.

Johnstone, P. (1978) Breeding and rearing the Canadian otter (*Lutra canadensis*) at Mole Hall Wildlife Park, 1966-1977. Int. Zoo Yearbook 18: 143-147.

Knudsen, G. J.; Hale, J. B. (1968) Food habits of otters in the Great Lakes region. J. Wildl. Manage. 32: 89-93.

Lagler, K. F.; Ostenson, B. T. (1942) Early spring food of the otter in Michigan. J. Wildl. Manage. 6: 244-254.

Lancia, R. A.; Hair, J. D. (1983) Population status of bobcat (*Felis rufus*) and river otter (*Lutra canadensis*) in North Carolina. Raleigh, NC: North Carolina State Univ., Proj. E-1; 65 pp.

Larsen, D. N. (1983) Habitats, movements, and foods of river otters in coastal southeastern Alaska [master's thesis]. Fairbanks, AL: University of Alaska.

Larsen, D. (1984) Feeding habits of river otters in coastal southeastern Alaska. J. Wildl. Manage. 48: 1446-1452.

Lauhachinda, V. (1978) Life history of the river otter in Alabama with emphasis on food habits [Ph.D. dissertation]. Auburn, AL: University of Alabama.

Liers, E. E. (1951a) My friends the land otters. Nat. Hist. 60: 320-326.

Liers, E. E. (1951b) Notes on the river otter (*Lutra canadensis*). J. Mammal. 32: 1-9.

Liers, E. E. (1966) Notes on breeding the Canadian otter *Lutra canadensis* in captivity and longevity records of beavers *Castor canadensis*. Int. Zoo Yearbook 6: 171-172.

Loranger, A. J. (1981) Late fall and early winter foods of the river otter (*Lutra canadensis*) in Massachusetts, 1976 - 1978. In: Chapman, J. A.; Pursley, D., eds. Worldwide furbearer conference proceedings, v 1; August 3-11, 1980; Frostburg, MD; pp. 599-605.

MacFarlane, R. (1905) Notes on mammals collected and observed in the northern Mackenzie River District. Proc. U.S. Natl. Mus. 23: 716-717.

Mack, C. M. (1985) River otter restoration in Grand County, Colorado [master's thesis]. Fort Collins, CO: Colorado State University.

McDaniel, J. C. (1963) Otter population study. Proc. Annu. Conf. Southeast. Assoc. Game and Fish Comm. 17: 163-168.

Melquist, W. E.; Dronkert, A. E. (1987) River otter. In: Novak, M.; Baker, J. A.; Obbarel, M. E.; et al., eds. Wild furbearer management and conservation. Pittsburgh, PA: University of Pittsburgh Press; pp. 627-641.

Melquist, W. E.; Hornocker, M. G. (1983) Ecology of river otters in west central Idaho. In: Kirkpatrick, R. L., ed. Wildlife monographs: v. 83. Bethesda, MD: The Wildlife Society; 60 pp.

Melquist, W. E.; Whitman, J. S.; Hornocker, M. G. (1981) Resource partitioning and coexistence of sympatric mink and river otter populations. In: Chapman, J. A.; Pursley, D., eds. Worldwide furbearer conference proceedings, v 1; August 3-11, 1980; Frostburg, MD; pp. 187-220.

Modafferi, R.; Yocom, C. F. (1980) Summer food of river otter in north coastal California lakes. Murrelet 61: 38-41.

Mowbray, E. E.; Pursley, D.; Chapman, J. A. (1979) The status, population characteristics and harvest of the river otter in Maryland. Waverly Press; Maryland Wildl. Admin., Publ. Wildl. Ecol. 2; 16 pp.

Nagy, K. A. (1987) Field metabolic rate and food requirement scaling in mammals and birds. Ecol. Mono. 57: 111-128.

Palmer, E. L.; Fowler, H. S. (1975) Fieldbook of natural history. New York, NY: McGraw-Hill Book Co.

Pearson, O. P.; Enders, R. K. (1944) Duration of pregnancy in certain Mustelids. J. Exp. Zool. 95: 21-35.

Pierce, R. M. (1979) Seasonal feeding habits of the river otter (*Lutra canadensis*) in ditches of the Great Dismal Swamp [master's thesis]. Norfolk, VA: Old Dominion University.

Reid, D. G. (1984) Ecological interactions of river otters and beavers in a boreal ecosystem [master's thesis]. Calgary, Canada: University of Calgary.

Ryder, R. A. (1955) Fish predation by the otter in Michigan. J. Wildl. Manage. 19: 497-498.

Scheffer, V. B. (1958) Long life of a river otter. J. Mammal. 39: 591.

Sheldon, W. G.; Toll, W. G. (1964) Feeding habits of the river otter in a reservoir in central Massachusetts. J. Mammal. 45: 449-455.

Shirley, M. G. (1985) Spring food habits of river otter in southwestern Louisiana (abstract only). Proc. La. Acad. Sci. 48: 138.

Stahl, W. R. (1967) Scaling of respiratory variables in mammals. J. Appl. Physiol. 22: 453-460.

Stenson, G. B.; Badgero, G. A.; Fisher, H. D. (1984) Food habits of the river otter *Lutra canadensis* in the marine environment of British Columbia. Can. J. Zool. 62: 88-91.

Tabor, J. E.; Wight, H. M. (1977) Population status of river otter in western Oregon. J. Wildl. Manage. 41: 692-699.

Toll, W. G. (1961) The ecology of the river otter (*Lutra canadensis*) in the Quabbin Reservation of central Massachusetts [master's thesis]. Amherst, MA: University of Massachusetts.

Toweill, D. E. (1974) Winter food habits of river otters in western Oregon. J. Wildl. Manage. 38: 107-111.

Toweill, D. E.; Tabor, J. E. (1982) River otter. In: Chapman, J. A.; Feldhammer, G. A., eds. Wild mammals of North America. Baltimore, MD: Johns Hopkins University Press; pp. 688-703.

Trippensee, R. E. (1953) Wildlife management: fur bearers, waterfowl, and fish. New York, NY: McGraw-Hill.

Tumlison, R.; Shalaway, S. (1985) An annotated bibliography on the North American river otter *Lutra canadensis*. Stillwater, OK: Okla. Fish Wildl. Res. Unit & Dept. Zool., Oklahoma State University.

van Zyll de Jong, C. G. (1972) A systematic review of the nearctic and neotropical river otters (Genus *Lutra*, Mustelidae, Carnivora). Ontario, Canada: R. Ontario Mus., Life Sci. Contr. 80.

Wilson, K. A. (1959) The otter in North Carolina. Proc. Southeast. Assoc. Fish and Game Comm. 13: 267-277.

Wilson, K. A. (1985) The role of mink and otter as muskrat predators in northeastern North Carolina. Proc. Annu. Conf. Southeast. Assoc. Game Fish Comm. 18: 199-207.

Woolington, J. D. (1984) Habitat use and movements of river otters at Kelp Bay, Baranof Island, Alaska [master's thesis]. Fairbanks, AK: University of Alaska.

2.2.6. Harbor Seal (hair seals)

Order *Carnivora*, Family *Phocidae*. Seals, sea lions, and walruses are collectively referred to as pinnipeds (Latin for wing-footed). Pinnipeds are divided into three families: otarids (sea lions and fur seals); phocids (hair seals, also called true seals or earless seals); and walruses. Most pinnipeds feed on marine species such as fish, squid, and other invertebrates (Burt and Grossenheider, 1980). Unlike fur seals, which are protected from the cold marine environment by a dense layer of underfur, phocids rely only on a thick blubber layer for insulation (Pierotti and Pierotti, 1980). Phocids include both the smallest (ring seals) and the largest (elephant seals) of the pinnipeds. The geographic range of most phocid species is from the arctic Atlantic and Pacific south to the coasts of Canada and Alaska, although some do inhabit warmer water (Burt and Grossenheider, 1980). Most phocids, with the exception of the elephant seal, do not exhibit the large disparity in size between the sexes, which is characteristic of otarids (sea lions and fur seals) (Burt and Grossenheider, 1980).

Selected species

In North America, harbor seals (*Phoca vitulina*) range from Alaska to Baja California, Mexico, along the Pacific coast (subspecies *richardsi*; Hoover, 1988), and from Newfoundland to eastern Long Island along the Atlantic coast (subspecies *concolor*; Payne and Selzer, 1989). They are one of the most commonly seen pinniped species, in part due to their tendency to inhabit coastal areas (Hoover, 1988). Harbor seals can be found along the Pacific coast on a year-round basis (except during stormy periods in winter), but Atlantic populations winter offshore when coastal ice has formed in their usual haul-out areas (Boulva and McLaren, 1979). The recent increases in harbor seal populations in New England waters appear to be due to a southward dispersal of seals from rookeries in Maine following the termination of a Massachusetts bounty on harbor seals (1962) and the passage of the Marine Mammal Protection Act (1972) (Payne and Schneider, 1984).

The spotted or largha seal (*Phoca largha*) is a closely related species that until recently was considered a subspecies of the harbor seal. It is similar in size, appearance, and feeding habits to the Pacific harbor seal, but it tends to inhabit colder waters along the Pacific coasts (Ashwell-Erickson and Elsner, 1981). In North America, it seldom ventures further south than the northern coast of Alaska (Ashwell-Erickson and Elsner, 1981). The spotted seal requires ice for breeding haul-outs and gives birth about 2 months earlier than the Pacific harbor seal (Ashwell-Erickson and Elsner, 1981; Boulva and McLaren, 1979). The harbor seal, in contrast, breeds on land (Boulva and McLaren, 1979).

Body size. The length and weight of harbor seals vary geographically, but sexually mature adults tend to be about 1.5 m in length and weigh from 65 to 90 kg (Ashwell-Erickson and Elsner, 1981; Pitcher and Calkins, 1979). Harbor seals exhibit some sexual dimorphism, the male being larger (Pitcher and Calkins, 1979). Body length usually is used to measure size because weight can vary substantially with factors such as season, food availability, and molting (Ronald et al., 1982). Newborn pups are around 80 cm long and weigh from 8.6 to almost 15 kg, with females often weighing less than males (Newby, 1973; Pitcher and Calkins, 1979; Rosen, 1989). Harbor seal pups are highly precocial and are

able to swim within hours of birth (Boulva and McLaren, 1979; Lawson and Renouf, 1987). Seal milk consists of about half fat, and the pups more than double their weight before they are weaned at approximately 30 days (Bigg, 1969a, as cited in Pitcher and Calkins, 1979). Harbor seals continue to grow with age for several years beyond the age of sexual maturity (Boulva and McLaren, 1979; Pitcher and Calkins, 1979). Body fat varies seasonally with food intake, while total body weight and lean body mass increase with age (Ashwell-Erickson and Elsner, 1981). Harbor seals, unlike many other pinnipeds, do not fast for extended periods during the molting period or breeding season (Boulva and McLaren, 1979; Pierotti and Pierotti, 1980).

Habitat. Harbor seals inhabit a variety of environments and are able to tolerate a wide range of temperatures and water salinities (Boulva and McLaren, 1979; Hoover, 1988). In its eastern range, the harbor seal inhabits inlets, islets, reefs, and sandbars (Boulva and McLaren, 1979). In western North America, the harbor seal inhabits tidal mud flats, sand bars, shoals, river deltas, estuaries, bays, coastal rocks, and offshore islets (Johnson and Jeffries, 1977), even ranging up rivers into freshwater areas in search of food (Roffe and Mate, 1984). Harbor seals also inhabit some freshwater lakes (Power and Gregoire, 1978). Habitats used for haul-outs include cobble and sand beaches, tidal mud flats, offshore rocks and reefs, glacial and sea ice, and man-made objects such as piers and log booms (Hoover, 1988).

Food habits. Harbor seals' diet varies seasonally and includes bottom-dwelling fishes (e.g., flounder, sole, eelpout), invertebrates (e.g., octopus), and species that can be caught in periodic spawning aggregations (e.g., herring, lance, squid) (Everitt et al., 1981; Lowry and Frost, 1981; Pitcher and Calkins, 1979; Roffe and Mate, 1984).[9] Harbor seals are opportunistic, consuming different prey in relation to their availability and ease of capture (Pitcher and Calkins, 1979; Pitcher, 1980; Shaffer, 1989). They may move into rivers on a seasonal basis in pursuit of prey (e.g., eulachon in the Columbia River during winter; Brown et al., 1989). They hunt alone or in small groups (Hoover, 1988). Fish species consumed range between 40 and 280 mm, with mean values of between 60 and 180 mm (Brown and Mate, 1983). Recently weaned pups tend to feed on prey that are more easily captured than fish, such as shrimp or other crustaceans (Hoover, 1988; Pitcher and Calkins, 1979). During the breeding and molting seasons, when harbor seals spend more time on land, adults rely on their blubber layer as an additional source of energy (Ashwell-Erickson and Elsner, 1981). During this time, they may be more susceptible to lipophilic contaminants (e.g., PCBs) that may have accumulated in their blubber (Hoover, 1988).

---

[9]Studies of harbor seal diet often rely on counts of fish sagittal otoliths found in scats or stomach contents. These otoliths can be identified to the level of species, annuli on the otoliths counted to determine age, and fish weights and lengths estimated from otolith dimensions. However, partial or complete digestion of otoliths, particularly of small fish species, may result in significant underestimates of the proportion of these prey in seal diets, particularly from scat analysis (da Silva and Neilson, 1985; Harvey, 1989). Studies of stomach contents of stranded seals also may present a biased picture of dietary composition due to extended periods of fasting prior to stranding (Selzer et al., 1986).

In general, food consumption by adult seals is highest in winter and lowest in the summer (Ashwell-Erickson and Elsner, 1981; Ashwell-Erickson et al., 1979). Innes et al. (1987) estimated allometric equations for maintenance food ingestion rates (IR; wet-weight biomass) with body weight (BW, kg) for phocids:

$IR_{maint}(kg/day) = 0.079\ BW(kg)^{0.71}$ adult (N = 11; $r^2 = 0.84$);

$IR_{maint}(kg/day) = 0.032\ BW(kg)^{1.00}$ juveniles (N = 19; $r^2 = 0.68$); and

$IR_{maint}(kg/day) = 0.068\ BW(kg)^{0.78}$ both adults and juveniles (N = 30; $r^2 = 0.68$).

Allometric equations for food ingestion rates of growing animals (IR; wet-weight biomass) with body weight (BW, kg) for phocids also have been estimated (Innes et al., 1987):

$IR_{growth}(kg/day) = 0.0919\ BW(kg)^{0.84}$ adult (N = 11; $r^2 = 0.84$); and

$IR_{growth}(kg/day) = 0.0547\ BW(kg)^{0.84}$ juveniles (N = 19; $r^2 = 0.68$).

Innes et al. (1987) found that growing juvenile phocid seals ingested 1.7 times more biomass per day than a similar-sized growing adult and 1.4 times more than juvenile phocids that were not growing.

Boulva and McLaren (1979) estimated a relationship between body weight and daily food ingestion for harbor seals from eastern Canada:

$IR_{free\text{-}living}(kg/day) = 0.089\ BW(kg)^{0.76}$ adults (N = 26).

Perez (1990) estimated the average energy value of the harbor seal's diet to be 1.4 kcal/g wet weight. Ashwell-Erickson and Elsner (1981) provide age-specific estimates of food ingestion rates for the closely related spotted seal (see Appendix) and summarize studies in which food ingestion rates for harbor and spotted seals have been estimated.

Temperature regulation and molt. Harbor seals can maintain their heat balance while diving in water as low as 13°C without increased muscle activity or metabolic rate (Ronald et al., 1982). For seals in general, molting is simply part of an ongoing pelage cycle that is influenced by the seal's environment, physiology, and behavior (Ling, 1974). Phocids get an entirely new coat with each annual molt (Ling, 1970), a process that takes about 5 weeks (Scheffer and Slipp, 1944, as cited in Ashwell-Erickson and Elsner, 1981). During their molt, they spend more time hauled and exhibit a slower metabolic rate (e.g., 83 percent of premolt levels), which decreases their food requirements (Ashwell-Erickson and Elsner, 1981). After molting, harbor seals increase their fat reserves (and weight) for the winter and early spring; metabolic rates also might be lowered during this time to conserve energy (Renouf, 1989).

Breeding activities and social organization. The timing of reproduction in harbor seals varies with location. Mating and pupping are initiated earlier in the year in more

southern latitudes, but within populations, breeding is synchronized (Hoover, 1988; Slater and Markowitz, 1983). Harbor seals may form large breeding aggregations on land in areas where food resources are plentiful (Slater and Markowitz, 1983); however, pupping activities are not restricted to large, discrete rookeries (Pitcher and Calkins, 1979). Mating occurs soon after weaning, which is 3 to 6 weeks after birth (Ashwell-Erickson and Elsner, 1981). It is likely that harbor seals are promiscuous (Pierotti and Pierotti, 1980), although there is some evidence that they are mildly polygynous, with males defending territories at the haul-out sites (Boulva and McLaren, 1979; Perry, 1989; Slater and Markowitz, 1983). Following mating, implantation is delayed for 1.5 to 3 months, during which time the female molts (Bigg, 1969a; Hoover, 1988; Pitcher and Calkins, 1979). At other times of the year, harbor seals also can be found in groups of 30 to 80 in some haul-out areas (Hoover, 1988).

Home range and resources. Harbor seals generally inhabit highly productive coastal areas, with upwelling ocean currents that bring nutrients to the surface supporting abundant marine life (e.g., the California current system, the Gulf of Alaska, and the Gulf of Maine; Ronald et al., 1982). Harbor seals also require adequate places to haul out, and their distribution is influenced by the availability of suitable sites (Boulva and McLaren, 1979). In general, seals stay near particular haul-out sites with only local movements (Brown and Mate, 1983; Pitcher and Calkins, 1979; Slater and Markowitz, 1983). Haul-out patterns are determined by several factors, including weather, tidal pattern, time of day, season, and human proximity (Slater and Markowitz, 1983). Harbor seals are considered fairly sedentary, with individuals showing year-round site fidelity, although some seasonal movement associated with pupping and long-distance movements are recorded (Pitcher and Calkins, 1979; Slater and Markowitz, 1983). Data on likely daily or monthly foraging distances are lacking.

Population density. Harbor seals are found principally in coastal areas within 20 km of shore; they tend to concentrate in estuaries and protected waters (Hoover, 1988). Their distribution is highly patchy, and local population densities in haul-out areas with favorable food resources nearby can be quite high (Pitcher and Calkins, 1979).

Population dynamics. Females are sexually mature by 3 to 5 years of age, whereas males are sexually mature later, at 4 to 6 years of age (Boulva and McLaren, 1979; Pitcher and Calkins, 1979). Females only produce one pup per year (Hoover, 1988). Three major causes of preweaning pup mortality are stillbirth, desertion by the mother, and shark kills (Boulva and McLaren, 1979). Mortality from birth to 4 years of age was estimated to be 74 percent for females and 79 percent for males in one study, after which it remained at about 10 percent per year (Pitcher and Calkins, 1979). Life expectancy for harbor seals is about 30 years (Newby, 1978).

Similar species (from general references)

- The ringed seal (*Phoca hispida*) is smaller (1.4 m length; weight to 90 kg) than the harbor seal and inhabits colder waters. It feeds mainly on marine invertebrates.

- The harp seal (*Phoca groenlandicus*) (1.8 m; weight to 180 kg) inhabits deep, icy water. It ranges from the Arctic Atlantic south to Hudson Bay; it is only rarely found further south. It feeds on macroplankton and fish.

- The largha or spotted seal (*Phoca largha*) (1.5 m) is a closely related species that until recently was considered a subspecies of the harbor seal. Its characteristics are compared with those of the harbor seal under *Selected species.*

- The ribbon seal (*Phoca fasciata*) (1.6 m; males to 90 kg, females to 76 kg) lives near pack ice in the Bering Sea and feeds on bottom invertebrates, fish, and octopus and squid.

General references

Ashwell-Erickson and Elsner (1981); Burt and Grossenheider (1980); Hoover (1988); Pitcher and Calkins (1979); Ronald et al. (1982).

Harbor Seal (*Phoca vitulina*)

Factors	Age/Sex/ Cond./Seas.	Mean	Range or (95% CI of mean)	Location	Reference	Note No.
Body Weight (kg)	A M (> 7 yrs)	84.6 ± 11.3 SD		Gulf of Alaska	Pitcher & Calkins, 1979	
	A F (> 7 yrs)	76.5 ± 17.7 SD				
	J M 2 yrs	49		Aleutian Ridge and Pribilof Islands, Bering Sea, Alaska	Ashwell-Erickson & Elsner, 1981	1
	J M 4 yrs	70				
	J M 6 yrs	84				
	A M 8 yrs	95				
	A M 12 yrs	110				
	A M 16 yrs	120				
	A M 24 yrs	124				
	J F 2 yrs	40				
	J F 4 yrs	56				
	J F 6 yrs	67				
	A F 8 yrs	76				
	A F 12 yrs	90				
	A F 16 yrs	101				
	A F 24 yrs	112				
	neonate M	12.0 ± 0.51 SE		Alaska	Pitcher & Calkins, 1979	
	neonate F	11.5 ± 0.31 SE				
	at weaning B	24.0		British Columbia, Canada	Bigg, 1969a	2
Pup Growth Rate (g/day)	birth to weaning			Gulf of St. Lawrence/island marine	Rosen, 1989	
	M	520				
	F	790				
Metabolic Rate (IO_2/kg-day)	J B resting	7.3		California/lab	Davis et al., 1985	3
	A F resting	6.6				

Harbor Seal (*Phoca vitulina*)

Factors	Age/Sex/ Cond./Seas.	Mean	Range or (95% CI of mean)	Location	Reference	Note No.
Metabolic Rate (kcal/kg-day)	1 to 4 yrs old/ basal	57.5		Bering Sea, Alaska	Ashwell-Erickson & Elsner, 1981	
	A F basal A M basal	24.3 22.4			estimated	4
	A F free-living A M free-living	131 129	(57 - 300) (56 - 296)		estimated	5
Food Ingestion Rate (g/g-day)	A B	0.05		e Canada/marine	Boulva and McLaren, 1979	
	A B A F lact./gest.	0.06 to 0.08 0.10		review of several studies	Ashwell-Erickson & Elsner, 1981	
	J B 1st year	0.13		Bering Sea (1 harbor & 1 spotted seal)	Ashwell-Erickson & Elsner, 1981	
Water Ingestion Rate (g/g-day)	A B	0.0048	0.0028 - 0.0091	seawater ingestion (most water obtained from food)	Depocas et al., 1971	
	A B	0.064			estimated	6
Inhalation Rate (m^3/day)	A M A F	18.6 17.2			estimated	7
Surface Area (cm^2)	A M A F	19,620 18,380			estimated	8

Harbor Seal (*Phoca vitulina*)

Dietary Composition	Spring	Summer	Fall	Winter	Location/Habitat (measure)	Reference	Note No.
walleye pollock	3.7	27.3	32.2	1.3	Washington/ coastal island	Everitt et al., 1981	
English sole	37.0	0.0	27.0	0			
shiner perch	0.0	0.0	0.5	63.6			
Pacific herring	0	54.6	3.9	28.6	(% of total otoliths recovered from scat samples)		
Pacific cod	0	0	10.1	0			
rex sole	37	9.1	2.9	0			
Pacific tomcod	3.7	0	4.7	0			
rockfish	3.7	0	4.7	0			
Dover sole	3.7	0	3.4	2.6			
Petrale sole	7.4	0	1.8	0			
other fish	3.8	9.0	8.8	3.9			
octopus		17.6	17.7	30.4	Kodiak Island, Alaska/ coastal marine	Pitcher & Calkins, 1979	
salmon		5.4	0.0	0.0			
capelin		20.3	4.8	5.4			
Pacific cod		6.8	8.1	10.7	(% frequency of occurrence; stomach contents)		
walleye pollock		12.2	9.7	14.3			
Pacific sandlance		4.1	21.0	0.0			
squid & octopus		20			Gulf of Alaska/ coastal marine	Pitcher, 1980	
shrimp, crabs		3.7					
herring		6.4					
salmonids		4.4			(% wet volume; stomach contents)		
osmerids		22.5					
cod, tomcod, walleye, pollock		26.0			all seasons combined		
other		14.1					

Harbor Seal (*Phoca vitulina*)

Population Dynamics	Age/Sex/ Cond./Seas.	Mean	Range	Location/Habitat	Reference	Note No.
Foraging Radius (km)	A B A B	5 km 30 to 55 km	unknown unknown	California/Bay Washington/Columbia River	Stewart et al., 1989 Beach et al., 1985	9 10
Population Density (N/ha)	summer	0.0305	0.00394 - 0.0611 highly clumped distrib.	Maine/coastal marine throughout range and habitats	Richardson, 1981 Pitcher and Calkins, 1979	
Litter Size		1		throughout range and habitats	Hoover, 1988	
Litters /Year		1		throughout range and habitats	Hoover, 1988	
Months Gestation		10.5 to 11		NS/NS	FAO Adv. Comm., 1976	11
Age at Weaning	B B	30 days 35 days		e Canada/marine c California/coastal marine	Boulva & McLaren, 1979 Slater & Markowitz, 1983	
Age at Sexual Maturity (years)	F M F M	5.5 ± 0.23 SE 3 to 4 6	4 - 9 5 - 7	Gulf of Alaska/coastal marine e Canada/marine	Pitcher & Calkins, 1979 Boulva & McLaren, 1979	
Annual Mortality Rates (percent)	A B birth to 4 yrs 4 to 5 yrs old 7 to 14 yrs old ≥ 20 yrs old	17.5 77/4 yrs 11/yr 8 to 9/yr 14/yr		e Canada/marine Gulf of Alaska/coastal marine	Boulva & McLaren, 1979 Pitcher & Calkins, 1979	12
Longevity	A B A M A F		< 30 < 26 < 31	e Pacific/NS Gulf of Alaska/coastal marine	Newby, 1978 Pitcher & Calkins, 1979	

Harbor Seal (*Phoca vitulina*)

Seasonal Activity	Begin	Peak	End	Location	Reference	Note No.
Mating	early April		July	Nova Scotia, Canada	Boulva & McLaren, 1979	
		February		Mexico	Bigg, 1969b	13
		July		Bering Sea	Bigg, 1969b	13
Parturition	mid-May	mid-June	late June	Tugidak Island, Alaska	Pitcher & Calkins, 1979	
	late April		early May	c California	Riedman, 1990	
	early February			Mexico		
	late June		September	Canada		
	May	early June	June	Washington	Johnson & Jeffries, 1983	
	August		September	Washington, Puget Sound		
Molt	early June		early September	Scotland	Thompson & Rothery, 1987	14
	late June	late July	September/October	Gulf of Alaska	Pitcher & Calkins, 1979	

1 Estimated from graph of growth curve.
2 Cited in Boulva and McLaren (1979). Weight doubled from birth.
3 Juvenile is a yearling; weight 33 kg. Adult female weight 63 kg.
4 Estimated using equation 3-43 (Boddington, 1978) and body weights from Pitcher and Calkins (1979). Caution must be used, however, because pinnipeds were not included in the data set from which the allometric model was derived.
5 Estimated using equation 3-47 (Nagy, 1987) and body weights from Pitcher and Calkins (1979). Caution must be used, however, because pinnipeds were not included in the data set from which the allometric model was derived. Mean values are somewhat higher than is consistent with food ingestion rate estimates and data from the spotted seal (see Appendix).
6 Estimated using equation 3-17 (Calder and Braun, 1983) and body weights from Pitcher and Calkins (1979). Caution must be used, however, because pinnipeds were not included in the data set from which the allometric model was derived.
7 Estimated using equation 3-20 (Stahl, 1967) and body weights from Pitcher and Calkins (1979). Caution must be used, however, because pinnipeds were not included in the data set from which the allometric model was derived.
8 Estimated using equation 3-22 (Stahl, 1967) and body weights from Pitcher and Calkins (1979). Caution must be used, however, because pinnipeds were not included in the data set from which the allometric model was derived.
9 Satellite telemetry of one seal. Foraging radius depends on distribution and abundance of prey.
10 Seventy-five percent of 58 seals radio-tagged in the Columbia River were relocated at haul-out sites 30 to 55 km away. Cited in Hoover (1988).
11 Cited in Ronald et al. (1982).
12 Postweaning mortality.
13 Cited in Hoover (1988).
14 Nineteen to 33 days to complete molt.

References (including Appendix)

Allen, S. G.; Huber, H. R.; Ribic, C. A.; et al. (1989) Population dynamics of harbor seals in the Gulf of the Farallones, California. Calif. Fish Game 75: 224-232.

Angell-James, J. E.; Elsner, R.; de Burgh Daly, M. (1981) Lung inflation: effects on heat rate, respiration, and vagal afferent activity in seals. Am. J. Physiol. 240: H190-H198.

Ashwell-Erickson, S.; Elsner, R. (1981) The energy cost of free existence for Bering Sea harbor and spotted seals. In: Hood, D. W.; Calder, J. A., eds. The Eastern Bering Sea shelf: oceanography and resources. v. 2. Washington, DC: Department of Commerce; pp. 869-899.

Ashwell-Erickson, S.; Elsner, R.; Wartzol, D. (1979) Metabolism and nutrition of Bering Sea harbor and spotted seals. Proc. Alaska Sci. Conf. 29: 651-665.

Beach, R.J.; Geiger, A.; Jeffries, S. J., et al. (1985) Marine mammals and their interactions with fisheries of the Columbia River and adjacent waters, 1980-1982. Seattle, WA: Third Ann. Rept. to U.S. Dept. Commerce, NOAA, Natl. Mar. Fish. Serv.

Bigg, M. A. (1969a) The harbour seal in British Columbia. Fish. Res. Board Can.; Bull. 172.

Bigg, M. A. (1969b) Clines in the pupping season of the harbour seal, *Phoca vitulina*. J. Fish. Res. Board Can. 26: 449-455.

Boddington, M. J. (1978) An absolute metabolic scope for activity. J. Theor. Biol. 75: 443-449.

Boulva, J.; McLaren, I. A. (1979) Biology of the harbor seal, *Phoca vitulina*, in eastern Canada. Quebec, Canada: Fish. Res. Board Can. Bull. 200.

Brown, R. F.; Mate, B. R. (1983) Abundance, movements, and feeding habits of harbor seals, *Phoca vitulina*, at Nearts and Tillamook Bays, Oregon. U.S. Natl. Mar. Fish. Serv. Fish. Bull. 81: 291-301.

Brown, R. F.; Jeffries, S. J.; Harvey, J. T. (1989) Seasonal abundance and winter feeding ecology of harbor seals in the Columbia River (abstract). In: 8th Biennial Conference on the Biology of Marine Mammals; December 7-11, 1989; Pacific Grove, CA; p. 9.

Bryden, M. M. (1972) Growth and development of marine mammals. In: Harrison, R. J., ed. Functional anatomy of marine mammals. New York, NY: Academic Press; pp. 2-79.

Burt, W. H.; Grossenheider, R. P. (1980) A field guide to the mammals of North America north of Mexico. Boston, MA: Houghton Mifflin Co.

Calder, W. A.; Braun, E. J. (1983) Scaling of osmotic regulation in mammals and birds. Am. J. Physiol. 244: R601-R606.

Craig, A. B., Jr.; Pasche, A. (1980) Respiratory physiology of freely diving harbor seals (*Phoca vitulina*). Physiol. Zool. 53: 419-432.

da Silva, J.; Neilson, J. D. (1985) Limitations of using otoliths recovered in scats to estimate prey consumption in seals. Can. J. Fish. Aquat. Sci. 42: 1439-1442.

Davis, R. W.; Williams, T. M.; Kooyman, G. L. (1985) Swimming metabolism of yearling and adult harbor seals (*Phoca vitulina*). Physiol. Zool. 58: 590-596.

Depocas, F.; Hart, J. S.; Fisher, H. D. (1971) Sea water drinking and water flux in starved and in fed harbor seals, *Phoca vitulina*. Can. J. Physiol. Pharmacol. 49: 53-62.

Everitt, R. D.; Gearin, P. J.; Skidmore, J. S.; et al. (1981) Prey items of harbor seals and California sea lions in Puget Sound, Washington. Murrelet 62: 83-86.

Food and Agriculture Organization (FAO) of the United Nations, A. C. on Marine Resources Research. (1976) Mammals in the seas. Ad Hoc Group III on seals and marine otters, draft report. In: Symposium: Scientific consultation on marine mammmals; August 13 to September 9, 1976; Food and Agric. Advis. Comm. Mar. Resour. Res., Mar. Mammal, Sci. Consult. Organ. of U.N., Bergen, Norway.

Harkonen, T. J. (1988) Food-habitat relationship of harbour seals and black cormorants in Skagerrak and Kattegat. J. Zool. (London) 214: 673-681.

Harvey, J. T. (1989) Assessment of errors associated with harbour seal (*Phoca vitulina*) faecal sampling. J. Zool. (Lond.) 219: 101-111.

Hoover, A. A. (1988) Harbor seal, *Phoca vitulina*. In: Lentfer, J. W., ed. Selected marine mammals of Alaska: species accounts with research and management recommendations. Washington, DC: Marine Mammal Commission; pp. 125-157.

Innes, S.; Lavigne, D. M.; Earle, W. M.; et al. (1987) Feeding rates of seals and whales. J. Anim. Ecol. 56: 115-130.

Irving, L. (1972) Arctic life of birds and mammals including man. New York, NY: Springer-Verlag.

Johnson, M. L.; Jeffries, S. J. (1977) Population evaluation of the harbour seal (*Phoca vitulina richardii*) in the waters of the state of Washington. U.S. Mar. Mammal Comm.; Rep. MMC-75/05.

Johnson, M. L.; Jeffries, S. J. (1983) Population biology evaluation of the harbor seal (*Phoca vitulina richardii*) in the waters of the State of Washington: 1976-1977. Tacoma, WA: University of Puget Sound; MMC-76/25.

Jones, R. E. (1981) Food habits of smaller marine mammals from northern California. Proc. Calif. Acad. Sci. 42: 409-433.

Klinkhart, E. G. (1967) Birth of a harbor seal pup. J. Mammal. 48: 677.

Lawson, J. W.; Renouf, D. (1987) Bonding and weaning in harbor seals, *Phoca vitulina*. J. Mammal. 68: 445-449.

Ling, J. K. (1970) Pelage and molting in wild animals with special reference to aquatic forms. Q. Rev. Bio. 45: 16-54.

Ling, J. K. (1974) The integument of marine mammals. In: Harrison, R. J., ed. Functional anatomy of marine mammals: v. 2. New York, NY: Academic Press; pp. 1-44.

Lowry, L. F.; Frost, K. J. (1981) Feeding and trophic relationships of phocid seals and walruses in the Eastern Bering Sea. In: Hood, D. W.; Calder, J. A., eds. The Eastern Bering Sea shelf: oceanography and resources: v. 2. Washington, DC: Department of Commerce; pp. 813-824.

Nagy, K. A. (1987) Field metabolic rate and food requirement scaling in mammals and birds. Ecol. Mono. 57: 111-128.

Newby, T. C. (1973) Observations on the breeding behavior of the harbor seal in the State of Washington. J. Mammal. 54: 540-543.

Newby, T. C. (1978) Pacific harbor seal. In: Haley, D., ed. Marine mammals of eastern north Pacific and arctic waters. Seattle, WA: Pacific Search Press; pp. 184-191.

Payne, P. M.; Schneider, D. C. (1984) Yearly changes in abundance of harbor seals, *Phoca vitulina*, at a winter haul-out site in Massachusetts. Fish. Bull. 82: 440-442.

Payne, P. M.; Selzer, L. A. (1989) The distribution, abundance and selected prey of the harbor seal, *Phoca vitulina concolor*, in southern New England. Mar. Mammal. Sci. 5: 173-192.

Perez, M. A. (1990) Review of marine mammals population and prey information for Bering Sea ecosystem studies. Washington, DC: U.S. Dept. Commerce, Nat. Oceanic Atm. Admin., Nat. Mar. Fish. Serv.; NOAA Tech. Mem. NMFS F/NWC-186.

Perry, E. (1989) Evidence for polygyny in harbour seals, *Phoca vitulina*. In: 8th Biennial conference on the biology of marine mammals; December; Pacific Grove, CA.

Pierotti, R.; Pierotti, D. (1980) Effects of cold climate on the evolution of pinniped breeding systems. Evolution 34: 494-507.

Pitcher, K. W. (1977) Population productivity and food habits of harbor seals in the Prince William Sound-Copper River Delta area, Alaska. Final report to U. S. Marine Mammal Commission No. MMC-75103. USDC NTIS. PB-226 935.

Pitcher, K. W. (1980) Food of the harbor seal, *Phoca vitulina richardsi*, in the Gulf of Alaska. U.S. Natl. Mar. Fish. Serv. Fish. Bull. 78: 544-549.

Pitcher, K. W.; Calkins, D. G. (1979) Biology of the harbor seal, *Phoca vitulina richardsi*, in the Gulf of Alaska. Final report. Outer Continental Shelf Environmental Assessment Program Research Unit 229, Contract No. 03-5-002-69.

Pitcher, K. W.; McAllister, D. C. (1981) Movements and haulout behavior of radio-tagged harbor seals, *Phoca vitulina*. Can. Field-Nat. 95:292-297.

Power, G.; Gregoire, J. (1978) Predation by freshwater seals on the fish community of lower Seal Lake, Quebec. J. Fish. Res. Board Can. 35: 844-850.

Renouf, D. (1989) Weight increases in harbour seals in spite of reduced food intake and heightened thermal demands: adjustable metabolism? In: 8th Biennial Conference on the Biology of Marine Mammals; December; Pacific Grove, CA.

Richardson, D. T. (1973) Distribution and abundance of harbor and gray seals in Acadia National Park. Final report to National Park Service and Maine Department of Sea and Shore Fisheries. State of Maine Contract No. MM4AC009.

Richardson, D. T. (1981) Feeding habits and population studies of Maine's harbor and gray seals. Natl. Geogr. Soc. Res. Rep. 13: 497-502.

Riedman, M. (1990) The pinnipeds: seals, sea lions, and walruses. Berkeley, CA: University of California Press.

Roffe, T. J.; Mate, B. R. (1984) Abundances and feeding habits of pinnipeds in the Rogue River, Oregon. J. Wildl. Manage. 48: 1262-1274.

Ronald, K.; Selley, J.; Healey, P. (1982) Seals. In: Chapman, J. A.; Feldhammer, G. A., eds. Wild mammals of North America. Baltimore, MD: Johns Hopkins University Press; pp. 769-827.

Rosen, D. A. (1989) Neonatal growth rates and behaviour in the Atlantic harbour seal, *Phoca vitulina* (abstract). In: 8th Biennial Conference on the Biology of Marine Mammals; December 7-11, 1989; Pacific Grove, CA; p. 57.

Scheffer, V. B.; Slipp, J. W. (1944) The harbor seal in Washington state. Am. Midl. Nat. 32: 373-416.

Schneider, D. C.; Payne, P. M. (1983) Factors affecting haul-out of harbor seals at a site in southeastern Massachusetts. J. Mammal. 64: 518-520.

Selzer, L. A.; Early, G.; Fiorelli, P. M.; et al. (1986) Stranded animals as indicators of prey utilization by harbor seals, *Phoca vitulina concolor*, in southern New England. Fish. Bull. 84: 217-220.

Shaffer, K. E. (1989) Seasonal and size variations in diets of harbor seals, *Phoca vitulina* (abstract). In: 8th Biennial Conference on the Biology of Marine Mammals; December 7-11, 1989; Pacific Grove, CA; p. 62.

Slater, L. M.; Markowitz, H. (1983) Spring population trends in *Phoca vitulina richardi* in two central California coastal areas. Calif. Fish Game 69: 217-226.

Stahl, W. R. (1967) Scaling of respiratory variables in mammals. J. Appl. Physiol. 22: 453-460.

Stewart, B. S.; Leatherwood, S.; Yochem, P. K.; et al. (1989) Harbor seal tracking and telemetry by satellite. Mar. Mamm. Sci. 5: 361-375.

Stutz, S. S. (1966) Moult and pelage patterns in the Pacific harbor seal, *Phoca vitulina* [master's thesis]. Vancouver, Canada: University of British Columbia.

Thompson, P; Rothery, P. (1987) Age and sex differences in the timing of moult in the common seal, *Phoca vitulina*. J. Zool. (London) 212: 597-603.

Wilson, S. C. (1978) Social organization and behavior of harbor seals *Phoca vitulina concolor* in Maine. Final report to Marine Mammal Commission, Contract No. GPO PB 280-3188. NTIS PB 280 188.

2.2.7. Deer Mouse (deer and white-footed mice)

Order *Rodentia*, Family *Muridae* (Genus *Peromyscus*).[h] New world mice (family Muridae) are small, ground-dwelling rodents that live in a large variety of habitats including woodlands, prairies, rocky habitats, tundra, and deserts. All are nocturnal and are preyed on by owls, hawks, snakes, and carnivorous mammals. Most species eat primarily seeds, but some also regularly eat small invertebrates. Many species store food. The genus *Peromyscus* is the most widespread and geographically variable of North American rodents (MacMillen and Garland, 1989).

Selected species

The deer mouse *(Peromyscus maniculatus)* is primarily granivorous and has the widest geographic distribution of any *Peromyscus* species (Millar, 1989; Brown and Zeng, 1989). It is resident and common in nearly every dry-land habitat within its range, including alpine tundra, coniferous and deciduous forest, and grasslands as well as deserts. There are many recognized subspecies or races of the deer mouse associated with different locations or insular habitats, including *artemisiae, austerus, bairdii, balaclavae, blandus, borealis, carli, cooledgei, gambelii, gracilis, labecula, maniculatus, oreas, nebrascensis, nubiterrae, rufinus,* and *sonoriensis* (MacMillen and Garland, 1989; Millar, 1982)

Body size. Deer mice range from 7.1 to 10.2 cm in length, with a 5.1 to 13 cm tail, and adults weigh from 15 to 35 g (Burt and Grossenheider, 1980; see table). Body size varies somewhat among populations and subspecies throughout the species' range. Body weight also varies seasonally, being lower in autumn and winter and a few grams higher in spring and summer (Zegers and Merritt, 1988). There may (Fleharty et al., 1973) or may not (Millar and Schieck, 1986) be seasonal differences in fat content.

Habitat. Deer mice inhabit nearly all types of dry-land habitats within their range: short-grass prairies, grass-sage communities, coastal sage scrub, sand dunes, wet prairies, upland mixed and cedar forests, deciduous forests, ponderosa pine forests, other coniferous forests, mixed deciduous-evergreen forests, juniper/piñon forests, and other habitats (Holbrook, 1979; Kaufman and Kaufman, 1989; Ribble and Samson, 1987; Wolff and Hurlbutt, 1982). Few studies have found microhabitat features that distinguish the deer mouse, and some studies have come to different conclusions regarding habitat structure preferences (Ribble and Samson, 1987). For example, Vickery (1981) found that deer mice appeared to prefer areas with moderate to heavy ground and mid-story cover to more open ground areas, whereas others have found more deer mice in more open than in more vegetated areas (see Kaufman and Kaufman, 1989).

Food habits. Deer mice are omnivorous and highly opportunistic, which leads to substantial regional and seasonal variation in their diet. They eat principally seeds, arthropods, some green vegetation, roots, fruits, and fungi as available (Johnson, 1961; Menhusen, 1963; Whitaker, 1966). The nonseed plant materials provide a significant

---

[h] *Peromyscus* is considered a member of the family Cricetidae by some mammalogists.

proportion of the deer mouse's daily water requirements (MacMillen and Garland, 1989). Food digestibility and assimilation for most of their diet have been estimated to be as high as 88 percent (Montgomery, 1989). Deer mice may cache food during the fall and winter in the more northern parts of their range (Barry, 1976; Wolff, 1989). They are nocturnal and emerge shortly after dark to forage for several hours (Marten, 1973).

Temperature regulation. The deer mouse has a metabolic rate about 1.3 times higher than the other species in the genus (MacMillen and Garland, 1989; Morris and Kendeigh, 1981; see table). Its metabolic rate is substantially higher in winter than in summer (Morris and Kendeigh, 1981; Stebbins, 1978; Zegers and Merritt, 1988). Outside the thermoneutral zone (25 to 35°C), metabolic rate varies according to the following equation:

$$V_{O2} = 0.116 - 0.003(T_a) + 0.0304\ (V^{0.5})$$

where V_{O2} = volume oxygen consumed (ml/g-min); T_a = ambient temperature; and V = wind speed (Chappell and Holsclaw, 1984). Deer mice can enter torpor (body temperature, 19 to 30°C) to reduce metabolic demands in the winter and also in response to brief food shortages (Tannenbaum and Pivorun, 1988, 1989). The deer mouse uses nonshivering thermogenesis (NST) to quickly awaken from torpor and to maintain body temperature during the winter (Zegers and Merritt, 1987). The deer mouse may burrow in soils to assist thermoregulation; one study measured the burrow dimensions to be 24 cm deep (range 13 to 50 cm) and 132 cm long (range 30 to 470 cm) (Reynolds and Wakkinen, 1987).

Breeding activities and social organization. The duration of the reproductive season varies with latitude and longitude according to the regression equation:

$$Y = -33.0 + 2.79\ X + 0.0748\ Z - 0.0370\ X^2$$

where Y = duration of the breeding season in weeks, X = latitude, and Z = longitude (r = 0.58; Millar, 1989). Lactating females have longer gestation periods than nonlactating females. Newborn deer mice are highly altricial (Layne, 1968). Several studies have indicated that daily food consumption increases over 15 percent during early pregnancy and more than doubles during lactation (Glazier, 1979; Millar, 1975, 1978, 1979, 1982, 1985; Millar and Innes, 1983; Stebbins, 1977). Deer mice are promiscuous; in one study, 19 to 43 percent of litters resulted from multiple inseminations (Birdsall and Nash, 1973, as cited in Millar, 1989).

Home range and resources. Deer mice tend to occupy more than one nest site, most frequently in tree hollows up to 8 m from the ground (Wolff and Durr, 1986) but also among tree roots and under rocks and logs (Wolff and Hurlbutt, 1982; Wolff, 1989). At low densities, home ranges are maintained by mutual avoidance, but at higher densities, females may defend a core area or territory (Wolff, 1989). The home range of female deer mice encompasses both their foraging areas and their nests. Male home ranges are larger and overlap the home ranges of many females (Cranford, 1984; Taitt, 1981; Wolff, 1985a, 1986; Wolff et al., 1983).

Population density. Population density varies considerably over space and time and is often positively correlated with food abundance (Taitt, 1981; Wolff, 1989), moisture content of plants (Bowers and Smith, 1979), and vegetative cover (van Horne, 1982) as well as season (Montgomery, 1989; Taitt, 1985). Interspecific competition also can play a role in determining population densities (Kaufman and Kaufman, 1989).

Population dynamics. Although laboratory and field studies have demonstrated that females can produce their first litter by 3 months of age, females of the more northern populations do not mature under natural conditions until the spring after the year of their birth. First litters are consistently smaller than subsequent litters (Millar, 1989), and latitude and elevation explain a significant amount of the variation in litter size among *P. maniculatus* populations (Smith and McGinnis, 1968, as cited in Millar, 1989). Millar (1989) estimated the relationship between litter size and latitude and longitude to be

$$Y = -1.62 + 0.0103X + 0.106Z + 0.0004X^2 - 0.0005Z^2$$

where Y is the mean litter size; X, the latitude; and Z, the longitude. The largest litters are produced in northwestern North America. Pups wean within about 3 weeks, and females may have up to four litters per year in the more southern parts of the species' range (Millar, 1989). Mortality rates are high, and most deer mice live for less than 1 year (Millar and Innes, 1983).

Similar species (from general references)

- The cactus mouse (*Peromyscus eremicus*), almost the same size as the deer mouse (8.1 to 9.1 cm; 17 to 40 g), is found only in low deserts of the extreme southwest and Mexico. It may feed on green vegetation, seeds, and berries and can climb trees for food.

- The California mouse (*Peromyscus californicus*) (9.6 to 11.7 cm; 42 to 50 g) is found in southwestern California and lives among oaks and dense chaparral. It stores acorns in nests made of twigs and sticks.

- The canyon mouse (*Peromyscus crinitus*) (7.6 to 8.6 cm) is limited to the western United States. It lives in rocky canyons and on lava-covered slopes, nesting among rocks.

- The oldfield mouse (*Peromyscus polionotus*), smaller than the deer mouse (4.1 to 6.1 cm), is limited to the extreme southeastern United States, where it inhabits sandy beaches and fields and feeds on seeds and berries. Females may be territorial during the breeding season.

- The white-footed mouse (*Peromyscus leucopus*) is approximately the same size as the deer mouse (9.1 to 10.7 cm; 14 to 31 g). Its range extends north into Canada and west to Arizona but does not extend as far north and west as the deer mouse's range. Like the deer mouse, the white-footed mouse's diet consists mainly of arthropods, seeds, and other vegetation, and it usually nests off the ground. It is most abundant in habitat that includes a

canopy, such as brushy fields and deciduous woodlots in northern regions and riparian areas and ravines in prairie and semidesert regions.

- The cotton mouse (*Peromyscus gossypinus*) (9.1 to 11.7 cm; 28 to 51 g) is found in the southeastern United States where it inhabits wooded areas, swampland, stream banks, and field edges. This tree climber nests in trees, under logs, and in buildings.

- The brush mouse (*Peromyscus boylii*) (9.7 to 10.7 cm; 22 to 36 g) is limited to chaparral and rocky areas of the arid and semiarid west and southwest United States. A good climber, it lives under rocks and debris and in crevices. It feeds on pine nuts, acorns, seeds, and berries.

General references

Burt and Grossenheider (1980); Kirkland and Lane (1989); Millar (1985, 1989); Wolff (1989).

Deer Mouse (*Peromyscus maniculatus*)

Factors	Age/Sex Cond./Seas.	Mean	Range or (95% CI of mean)	Location (subspecies)	Reference	Note No.
Body Weight (g)	A M	22		North America	Millar, 1989	
	A F	20				
	A M	15.7		NS (*austerus*)	Fordham, 1971	1
	A F	14.8				
	A M	22.3		NS (*blandus*)	Dewsbury et al., 1980	1
	A F	21.1				
	A B	19.6 ± 0.71 SE		New Hampshire	Schlesinger & Potter, 1974	
	A F nonbreed.	20.3 ± 0.42 SE		NS (*borealis*) lab	Millar & Innes, 1983	
	A F gestat.	31.5 ± 0.43 SE				
	A F lactat.	24.5 ± 0.37 SE				
	neonate	1.8	1.6 - 2.8	North America	Millar, 1989	
	neonate	1.7 ± 0.02 SE		Alberta, Canada	Millar, 1989	
	at weaning	8.8	7.7 - 11.2	North America	Millar, 1989	
	at weaning	9.3 ± 0.10 SE		Northwest Territories, Canada	Millar, 1979	
Pup Growth Rate (g/day)	B	0.38 ± 0.01 SE	0.30 - 0.95	Alberta, Canada (*nebrascensis*)	Millar, 1985	
	M	0.27 ± 0.06 SE			Millar & Innes, 1983	2
	F	0.22 ± 0.05 SE		Alberta, Canada (*borealis*)		
Metabolic Rate (IO_2/kg-day)	F resting	50	40 - 61	North America	MacMillen & Garland, 1989	
	M avg daily:					
	winter	138 ± 5.3 SE		Alberta, Canada lab	Stebbins et al., 1980	3
	spring	102 ± 7.2 SE				
	summer	75 ± 3.4 SE				

Deer Mouse (*Peromyscus maniculatus*)

Factors	Age/Sex Cond./Seas.	Mean	Range or (95% CI of mean)	Location (subspecies)	Reference	Note No.
Metabolic Rate (kcal/kg-day)	M avg daily:			Alberta, Canada lab	Stebbins et al., 1980	3
	winter	668 ± 25 SE				
	spring	623 ± 35 SE				
	summer	360 ± 17 SE				
	B free-living:			Illinois lab	Morris & Kendeigh, 1981	4
	winter	790				
	summer	592				
	A M free-living	547	(259 - 1,153)		estimated	5
	A F free-living	574	(271 - 1,212)			
Food Ingestion Rate (g/g-day)	A F nonbreed.	0.19		Manitoba, Canada (*maniculatus*) lab	Millar, 1979	6 7
	A F nonbreed.	0.18		Alberta, Canada (*borealis*) lab	Millar & Innes, 1983	6 7
	A F lactating	0.45		Manitoba, Canada (*maniculatus*) lab	Millar, 1979	8
	A F lactating	0.38		Alberta, Canada (*borealis*) lab	Millar & Innes, 1983	9
	A F nonbreed.	0.19		Virginia lab	Cronin & Bradley, 1988	
	A M nonbreed.	0.22				
	J M	0.21 ± 0.01 SE		South Dakota lab	Nelson & Desjardins, 1987	
Water Ingestion Rate (g/g-day)	A B	0.19		(*sonoriensis*) lab	Ross, 1930	10
	A B	0.19	0.123 - 0.287	Illinois (*bairdii*) lab	Dice, 1922	11
	J M	0.34 ± 0.02 SE		South Dakota lab	Nelson & Desjardins, 1987	12
		0.15			estimated	13
Inhalation Rate (m^3/day)	A M	0.025			estimated	14
	A F	0.023				
Surface Area (cm^2)	A M	91			estimated	15
	A F	86				

Deer Mouse (*Peromyscus maniculatus*)

Dietary Composition	Spring	Summer	Fall	Winter	Location (subspecies)/Habitat (measure)	Reference	Note No.
nuts/seeds		0	24	23	Virginia (*nubiterrae*)/ oak-maple-hickory forest	Wolff et al., 1985	
arthropods		56	30	46			
Lepidopt. larvae		4	trace	2			
Lepidopt. adults		3	26	7	(% frequency of occurrence; stomach contents)		
green veg.		5	12	18			
fungus		7	trace	1			
fruit		25	4	1			
unknown		1	4	3			
Lepidopt. larvae	20.6	34.5	16.7	4.8	Indiana/several habitats	Whitaker, 1966	
corn	4.1	4.2	3.2	8.7			
misc. veg.	15.8	3.1	8.0	13.4			
wheat seeds	6.5	1.6	3.2	23.7	(% volume; stomach contents)		
unident. seeds	5.4	5	8.8	8.3			
green veg.	7.6	0	4.3	3.7			
Echinochloa seeds	0	1.2	6.4	0			
Coleoptera	3.9	5.3	5.1	1.4			
soybeans	13.4	3.1	6.9	10.7			
Hemiptera	1.3	2.7	4.2	0.9			
beetles	14.6	23.8	9.4	4.9	Colorado/short grass prairie	Flake, 1973	
grasshoppers	6.4	4.2	6.4	2.5			
leafhoppers	13.3	1.8	1.9	2.5	(% volume by a ranking method; stomach contents)		
Lepidopterans	21.7	12.7	1.5	1.8			
spiders	2.6	2.7	2.5	0.3			
seeds	22.5	25.9	56.8	65.4			
forbs	4.7	10.0	5.6	4.3			
grasses & sedges	4.0	2.6	2.8	4.8			
shrubs	3.8	1.4	0.8	2.6			

Deer Mouse (*Peromyscus maniculatus*)

Population Dynamics	Age/Sex/ Cond./Seas.	Mean	Range	Location (subspecies)/Habitat	Reference	Note No.
Home Range Size (ha)	A M summer	0.039 ±0.0054 SD		Utah/subalpine meadow snowfree	Cranford, 1984	
	A F summer	0.027 ±0.0047 SD				
	A M winter	0.019 ±0.0065 SD		Utah/subalpine meadow snowbound	Cranford, 1984	
	A F winter	0.014 ±0.0050 SD				
	B M	0.058 ± 0.006 SE	0.054 - 0.065	Virginia/mixed deciduous forest	Wolff, 1985a	
	B F	0.061 ± 0.005 SE	0.054 - 0.072			
	A M	0.10 ± 0.0063 SE		Oregon/ponderosa pines	Bowers & Smith, 1979	
	A F	0.075 ±0.0063 SE				
	A M	0.128 ± 0.012 SE		Idaho/(*artemisiae-sarcobatus*) desert	Bowers & Smith, 1979	
	A F	0.094 ±0.0013 SE				
Population Density (N/ha)	B B	0.19		Arizona/desert	Brown & Zeng, 1989	
	A B summer	2.8		Colorado/subalpine meadows	Vaughn, 1974	
	B B summer		12.8 - 22.4	Utah/subalpine meadow	Cranford, 1984	
	B B winter		3.4 - 8.4			
	A B		12.7 - 45.5	British Columbia, Canada/burnt slash	Sullivan, 1979	
	B B	12 ± 6.7 SD	3.9 - 28	Montana/understory near river	Metzgar, 1979	
Litter Size		3.4		Virginia (*nubiterrae*)/NS	Wolff, 1985b	
		4.4	3.0 - 6.4	average for North America/NS	Millar, 1989	
		5.1 ± 0.14 SE	1 - 8	Alberta, Canada (*nebrascensis*)/NS	Millar, 1985	
Litters/Year		2.4		average for North America/NS	Millar, 1989	
		1.9 ± 0.1 SE		Alberta, Canada (*borealis*)/various alpine	Millar & Innes, 1983	

Deer Mouse (*Peromyscus maniculatus*)

Population Dynamics	Age/Sex/ Cond./Seas.	Mean	Range	Location (subspecies)/Habitat	Reference	Note No.
Days Gestation	F non-lact. F lactating	23.6 26.9		average for United States/NS	Millar, 1989	
	F non-lact. F lactating	22.4 ± 0.1 SE 24.1 ± 0.3 SE	22 - 23 22 - 27	Kansas/NS	Svendsen, 1964	16
	F non-lact. F lactating	25.5 ± 0.3 SE 29.5 ± 1.4 SE	23 - 26 24 - 35	Alberta, Canada (*nebrascensis*)/lab	Millar, 1985	
Age at Weaning (days)	B B	20.2 24.9	16 - 25	average for North America/NS Alberta, Canada (*borealis*)/various alpine	Millar, 1989 Millar & Innes, 1983	
	B	17.5		Colorado/NS	Halfpenny, 1980	16
Age at Sexual Maturity	M F	35 days 60 days		Alberta, Canada (*nebrascensis*)/lab	Millar, 1985	
Mortality Rates	A F winter A M winter J F winter J M winter	100%/winter 33%/winter 56%/winter 70%/winter		Alberta, Canada (*borealis*)/ various alpine	Millar & Innes, 1983	
	A B summer J B summer	20%/2 weeks 19%/2 weeks		Alberta, Canada (*borealis*)/ various alpine	Millar & Innes, 1983	
Longevity	B B	< 1 yr		Alberta, Canada (*borealis*)/ various alpine	Miller & Innes, 1983	

Seasonal Activity	Begin	Peak	End	Location (subspecies)	Reference	Note No.
Mating	April November March May		August April October August	Massachusetts Texas Virginia (*nubiterrae*) California	Drickamer, 1978 Blair, 1958 Wolff, 1985b Dunmire, 1960	16 16 16 16
Dispersal		spring (males)		Vancouver, Canada	Fairbairn, 1977	

Deer Mouse (*Peromyscus maniculatus*)

Seasonal Activity	Begin	Peak	End	Location (subspecies)	Reference	Note No.
Torpor		winter		northern parts of range	Tannenbaum & Pivorun, 1989	

1 Cited in Montgomery (1989).
2 Growth rate of "newly emerged" pups, soon after leaving the nest.
3 Temperatures during winter averaged -17.7°C (-6 to -22°C); during spring averaged 14.5°C (8 to 22°C); during summer 20.6°C (14 to 32°C).
4 Estimated by authors from laboratory-derived model assuming no reproduction, molt, or weight change and assuming summer temperatures averaged 17.5°C above ground and 20.2°C in burrows and winter temperatures averaged -3°C above ground and 10.7°C in burrows.
5 Estimated using equation 3-48 (Nagy, 1987) and body weights from Millar (1989).
6 Diet of rat chow with 3 percent water content and 4.5 kcal/g dry weight.
7 Diet of Purina lab chow no. 5001; composition not specified.
8 Diet of lab chow; composition not specified.
9 Diet of lab chow with 8 to 10 percent water content.
10 Mean varied by subspecies; *sonoriensis, eremicus, gambelii,* and *fraterculus* tested. Dry diet prepared in lab, probably less than 10 percent water content; air temperature 21 to 24°C.
11 Dry air at 32 to 34°C; diet of wheat and peanuts, about 10 percent water content.
12 Temperature 20°C ± 2°C; diet of lab chow with 8 to 10 percent water content.
13 Estimated using equation 3-17 (Calder and Braun, 1983) and body weights from Millar (1989).
14 Estimated using equation 3-20 (Stahl, 1967) and body weights from Millar (1989).
15 Estimated using equation 3-22 (Stahl, 1967) and body weights from Millar (1989).
16 Cited in Millar (1989).

References (including Appendix)

Abbott, K. D. (1974) Ecotypic and racial variation in the water and energy metabolism of *Peromyscus maniculatus* from the western United States and Baja California, Mexico [Ph.D. dissertation]. Irvine, CA: University of California.

Agnew, W. J.; Uresk, D. W.; Hansen, R. M.; et al. (1988) Arthropod consumption by small mammals on prairie dog colonies and adjacent ungrazed mixed grass prairie in western South Dakota. In: Uresk, D. W.; Schenbeck, G. L.; Cefkin, R., tech. coords. Eighth Great Plains wildlife damage control workshop proceedings; April 28-30, 1987; Rapid City, South Dakota. Fort Collins, CO: U.S. Dept. Agr., Forest Serv., Rocky Mountain Forest and Range Experiment Station; pp. 81-87.

Barry, W. J. (1976) Environmental effects on food hoarding in deermice (*Peromyscus*). J. Mammal. 57: 731-746.

Birdsall, D. A.; Nash, D. (1973) Occurrence of successful multiple insemination of females in natural populations of deer mice (*Peromyscus maniculatus*). Evolution 27: 106-110.

Blair, W. F. (1940) A study of prairie deer mouse populations in southern Michigan. Am. Midl. Nat. 24: 273-305.

Blair, W. F. (1958) Effects of x-irradiation of a natural population of deer-mouse (*Peromyscus maniculatus*). Ecology 39: 113-118.

Bowers, M. A.; Smith, H. D. (1979) Differential habitat utilization by sexes of the deermouse, *Peromyscus maniculatus*. Ecology 60: 869-875.

Brower, J. E.; Cade, T. J. (1966) Ecology and physiology of *Napaeozapus insignis* (Miller) and other woodland mice. Ecology 47: 46-63.

Brown, J. H.; Zeng, Z. (1989) Comparative population ecology of eleven species of rodents in the Chihuahuan Desert. Ecology 70: 1507-1525.

Burt, W. H.; Grossenheider, R. P. (1980) A field guide to the mammals of North America north of Mexico. Boston, MA: Houghton Mifflin Co.

Calder, W. A.; Braun, E. J. (1983) Scaling of osmotic regulation in mammals and birds. Am. J. Physiol. 244: R601-R606.

Chappell, M. A.; Holsclaw, D. S., III (1984) Effects of wind on thermoregulation and energy balance in deer mice (*Peromyscus maniculatus*). J. Comp. Physiol. B Biochem. Syst. Environ. Physiol. 154: 619-625.

Cook, J. C.; Topping, M. S.; Stombaugh, T. A. (1982) Food habits of *Microtus ochrogaster* and *Peromyscus maniculatus* in sympatry. Trans. Missouri Acad. Sci. 16: 17-23.

Cranford, J. A. (1984) Population ecology and home range utilizations of two subalpine meadow rodents (*Microtus longicaudus* and *Peromyscus maniculatus*). In: Merrit, J. F., ed. Winter ecology of small mammals: v. 10. Spec. Publ. Carnegie Mus. Nat. Hist.; pp. 1-380.

Cronin, K. L.; Bradley, E. L. (1988) The relationship between food intake, body fat and reproductive inhibition in prairie deermice (*Peromyscus maniculatus bairdii*). Comp. Biochem. Physiol. A Comp. Physiol. 89: 669-673.

Deavers, D. R.; Hudson, J. W. (1981) Temperature regulation in two rodents (*Clethrionomys gapperi* and *Peromyscus leucopus*) and a shrew (*Blarina brevicauda*) inhabiting the same environment. Physiol. Zool. 54: 94-108.

Dewsbury, D. A.; Baumgardner, D. J.; Evans, R. L.; et al. (1980) Sexual dimorphism for body mass in 13 taxa of muroid rodents under laboratory conditions. J. Mammal. 61: 146-149.

Dice, L. R. (1922) Some factors affecting the distribution of the prairie vole, forest deer mouse, and prairie deer mouse. Ecology 3: 29-47.

Drickamer, L. C. (1970) Seed preferences in wild caught *Peromyscus maniculatus bairdii* and *Peromyscus leucopus noveboracensis*. J. Mammal. 51: 191-194.

Drickamer, L. C. (1976) Hypothesis linking food habits and habitat selection in *Peromyscus*. J. Mammal. 57: 763-766.

Drickamer, L. C. (1978) Annual reproduction patterns in populations of two sympatric species of *Peromyscus*. Behavior. Biol. 23: 405-408.

Drickamer, L. C.; Bernstein, J. (1972) Growth in two subspecies of *Peromyscus maniculatus*. J. Mammal. 53: 228-231.

Dunmire, W. W. (1960) An altitudinal survey of reproduction in *Peromyscus maniculatus*. Ecology 41: 174-182.

Eisenberg, J. F. (1981) The mammalian radiations. Chicago, IL: University of Chicago Press.

Fairbairn, D. J. (1977) The spring decline in deer mice: death or dispersal? Can. J. Zool. 55: 84-92.

Fairbairn, D. J. (1978) Dispersal of deer mice, *Peromyscus maniculatus*: proximal causes and effects on fitness. Oecologia 32: 171-193.

Flake, L. D. (1973) Food habits of four species of rodents on a short-grass prairie in Colorado. J. Mammal. 54: 636-647.

Fleharty, E. D.; Krause, M. E.; Stinnett, D. P. (1973) Body composition, energy content, and lipid cycles of four species of rodents. J. Mammal. 54: 426-438.

Fordham, R. A. (1971) Field populations of deermice with supplemental food. Ecology 52: 138-146.

Glazier, D. S. (1979) An energetic and ecological basis for different reproductive rates in five species of *Peromyscus* (mice) [Ph.D. dissertation]. Ithaca, NY: Cornell University.

Green, D. A.; Millar, J. S. (1987) Changes in gut dimensions and capacity of *Peromyscus maniculatus* relative to diet quality and energy needs. Can. J. Zool. 65: 2159-2162.

Gyug, L. W. (1979) Reproductive and developmental adjustments to breeding season length in *Peromyscus* [master's thesis]. London, Ontario: University of Western Ontario.

Gyug, L. W.; Millar, J. S. (1980) Fat levels in a subarctic population of *Peromyscus maniculatus*. Can. J. Zool. 58: 1341-1346.

Halford, D. K. (1987) Density, movement, and transuranic tissue inventory of small mammals at a liquid radioactive waste disposal area. In: Pinder, J. E., III; Alberts, J. J.; McLeod, K. W., et al., eds. Environmental research on actinide elements; November 7-11, 1983; Hilton Head, South Carolina. U.S. Department of Energy, Office of Scientific and Technical Information. Rep. No. CONF-841142 (DE86008713); pp. 147-156.

Halfpenny, J. C. (1980) Reproductive strategies: intra and interspecific comparison within the genus *Peromyscus* [Ph.D. dissertation]. Fort Collins, CO: University of Colorado.

Hamilton, W. J., Jr. (1941) The foods of small forest mammals in eastern United States. J. Mammal. 22: 250-263.

Harris, J. H. (1986) Microhabitat segregation in two desert rodent species: the relation of prey availability to diet. Oecologia (Berl.) 68: 417-421.

Hayward, J. S. (1965) Metabolic rate and its temperature-adaptive significance in six geographic races of *Peromyscus*. Can. J. Zool. 43: 309-323.

Hock, R. J.; Roberts, J. C. (1966) Effect of altitude on oxygen consumption of deer mice: relation of temperature and season. Can. J. Zool. 44: 365-376.

Holbrook, S. J. (1979) Habitat utilization, competitive interactions, and coexistence of three species of cricetine rodents in east-central Arizona. Ecology 60: 758-769.

Howard, W. E. (1949) Dispersal, amount of inbreeding, and longevity of a local population of prairie deer mice on the George Reserve, southern Michigan. Contr. Lab. Vert. Biol., University of Michigan 43:1-52.

Johnson, D. R. (1961) The food habits of rodents in range lands of southern Idaho. Ecology 42: 407-410.

Kantak, G. E. (1983) Behavioral, seed preference, and habitat selection experiments with two sympatric *Peromyscus* species. Am. Midl. Nat. 109: 246-252.

Kaufman, D. W.; Kaufman, G. A. (1989) Population biology. In: Kirkland, G. L.; Lane, J. N., eds. Advances in the study of *Peromyscus* (Rodentia). Lubbock, TX: Texas Tech University Press.

King, J. A.; Deshaies, J. C.; Webster, R. (1963) Age of weaning of two subspecies of deer mice. Science 139: 483-484.

Kirkland, G. L.; Lane, J. N., eds. (1989) Advances in the study of *Peromyscus* (Rodentia). Lubbock, TX: Texas Tech University Press.

Layne, J. N. (1968) Ontogeny. In: Biology of *Peromyscus* (Rodentia). Spec. Publ., Amer. Soc. Mammal. 2: 1-593.

Linzey, A. V. (1970) Postnatal growth and development of *Peromyscus maniculatus nubiterrae*. J. Mammal. 51: 152-155.

MacMillen, R. E.; Garland, T. J. (1989) Adaptive physiology. In: Kirkland, G. L.; Lane, J. N., eds. Advances in the study of *Peromyscus* (Rodentia). Lubbock, TX: Texas Tech University Press.

Marinelli, L.; Millar, J. S. (1989) The ecology of beach-dwelling *Peromyscus maniculatus* on the Pacific coast. Can. J. Zool. 67: 412-417.

Martell, A. M.; MacAuley, A. L. (1981) Food habits of deer mice (*Peromyscus maniculatus*) in northern Ontario. Can. Field Nat. 95: 319-324.

Marten, G. G. (1973) Time patterns of *Peromyscus* activity and their correlations with weather. J. Mammal. 54: 169-188.

May, J. D. (1979) Demographic adjustments to breeding season length in *Peromyscus* [master's thesis]. London, Ontario: University of Western Ontario.

McCabe, T. T.; Blanchard, B. D. (1950) Three species of *Peromyscus*. Santa Barbara, CA: Rood Associates.

McLaren, S. B.; Kirkland, G. L., Jr. (1979) Geographic variation in litter size of small mammals in the central Appalachian region. Proc. Pennsylvania Acad. Sci. 53: 123-126.

McNab, B. K.; Morrison, P. (1963) Body temperature and metabolism in subspecies of *Peromyscus* from arid and mesic environments. Ecol. Monogr. 33: 63-82.

Menhusen, B. R. (1963) An investigation on the food habits of four species of rodents in captivity. Trans. Kansas Acad. Sci. 66: 107-112.

Metzgar, L. H. (1973a) Exploratory and feeding home ranges in *Peromyscus*. J. Mammal. 54: 760-763.

Metzgar, L. H. (1973b) Home range shape and activity in *Peromyscus leucopus*. J. Mammal. 54: 383-390.

Metzgar, L. H. (1979) Dispersion patterns in a *Peromyscus* population. J. Mammal. 60: 129-145.

Metzgar, L. H. (1980) Dispersion and numbers in *Peromyscus* populations. Am. Midl. Nat. 103: 26-31.

Meyers, P.; Master, L. L.; Garrett, R. A. (1985) Ambient temperature and rainfall: an effect on sex ratio and litter size. J. Mammal. 66: 289-298.

Millar, J. S. (1975) Tactics of energy partitioning in breeding *Peromyscus*. Can. J. Zool. 53: 967-976.

Millar, J. S. (1978) Energetics of reproduction in *Peromyscus leucopus*: the cost of lactation. Ecology 59: 1055-1061.

Millar, J. S. (1979) Energetics of lactation in *Peromyscus maniculatus*. Can. J. Zool. 57: 1015-1019.

Millar, J. S. (1982) Life cycle characteristics of northern *Peromyscus maniculatus borealis*. Can. J. Zool. 60: 510-515.

Millar, J. S. (1985) Life cycle characteristics of *Peromyscus maniculatus nebrascensis*. Can. J. Zool. 63: 1280-1284.

Millar, J. S. (1989) Reproduction and development. In: Kirkland, G. L.; Lane, J. N., eds. Advances in the study of *Peromyscus* (Rodentia). Lubbock, TX: Texas Tech University Press; pp. 169-205.

Millar, J. S.; Innes, D. G. (1983) Demographic and life cycle characteristics of montane deer mice. Can. J. Zool. 61: 574-585.

Millar, J. S.; Schieck, J. O. (1986) An annual lipid cycle in a montane population of *Peromyscus maniculatus*. Can. J. Zool. 64: 1981-1985.

Millar, J. S.; Willie, F. B.; Iverson, S. L. (1979) Breeding by *Peromyscus* in seasonal environments. Can. J. Zool. 57: 719-727.

Montgomery, W. I. (1989) *Peromyscus* and *Apodemus*: patterns of similarity in ecological equivalents. In: Kirkland, G. L.; Lane, J. N., eds. Advances in the study of *Peromyscus* (Rodentia). Lubbock, TX: Texas Tech University Press; pp. 293-366.

Morris, J. G.; Kendeigh, C. S. (1981) Energetics of the prairie deer mouse *Peromyscus maniculatus bairdii*. Am. Midl. Nat. 105: 368-76.

Morrison, P. R. (1948) Oxygen consumption in several small wild mammals. J. Cell. Comp. Physiol. 31: 69-96.

Morrison, P.; Dieterich, R.; Preston, D. (1977) Body growth in sixteen rodent species and subspecies maintained in laboratory colonies. Physiol. Zool. 50: 294-310.

Murie, M. (1961) Metabolic characteristics of mountain, desert and coastal populations of *Peromyscus*. Ecology 42: 723-740.

Myers, P.; Master, L. L. (1983) Reproduction by *Peromyscus maniculatus*: size and compromise. J. Mammal. 64: 1-18.

Myers, P.; Master, L. L.; Garrett, R. A. (1985) Ambient temperature and rainfall: an effect on sex ratio and litter size in deer mice. J. Mammal. 66: 289-298.

Nagy, K. A. (1987) Field metabolic rate and food requirement scaling in mammals and birds. Ecol. Monogr. 57: 111-128.

Nelson, R. J.; Desjardins, C. (1987) Water availability affects reproduction in deer mice. Biol. Reproduc. 37: 257-260.

Reynolds, T. D.; Wakkinen, W. L. (1987) Characteristics of the burrows of four species of rodents in undisturbed soils in southeastern Idaho. Am. Midl. Nat. 118: 245-250.

Ribble, D. O.; Samson, F. B. (1987) Microhabitat associations of small mammals in southeastern Colorado, with special emphasis on *Peromyscus* (Rodentia). Southwest. Nat. 32: 291-303.

Rood, J. K. (1966) Observations on the reproduction of *Peromyscus* in captivity. Am. Midl. Nat. 76: 496-503.

Ross, L. G. (1930) A comparative study of daily water-intake among certain taxonomic and geographic groups within the genus *Peromyscus*. Biol. Bull. 59: 326-338.

Sadleir, R. M. (1970) Population dynamics and breeding of the deermouse (*Peromyscus maniculatus*) on Burnaby Mountain, British Columbia. Syesis 3: 67-74.

Schlesinger, W. H.; Potter, G. L. (1974) Lead, copper, and cadmium concentrations in small mammals in the Hubbard Brook Experimental Forest. Oikos 25: 148-152.

Sieg, C. H.; Uresk, D. W.; Hansen, R. M. (1986) Seasonal diets of deer mice on bentonite mine spoils and sagebrush grasslands in southeastern Montana. Northwest Sci. 60: 81-89.

Smith, M. H.; McGinnis, J. T. (1968) Relationships of latitude, altitude and body size to litter size and mean annual production of offspring in *Peromyscus*. Res. Pop. Biol. 10: 115-126.

Stahl, W. R. (1967) Scaling of respiratory variables in mammals. J. Appl. Physiol. 22: 453-460.

Stebbins, L. L. (1977) Energy requirements during reproduction of *Peromyscus maniculatus*. Can. J. Zool. 55: 1701-1704.

Stebbins, L. L. (1978) Some aspects of overwintering in *Peromyscus maniculatus*. Can. J. Zool. 56: 386-390.

Stebbins, L. L.; Orich, R.; Nagy, J. (1980) Metabolic rates of *Peromsyscus maniculatus* in winter, spring, and summer. Acta. Theriol. 25: 99-104.

Sullivan, T. P. (1979) Repopulation of clear-cut habitat and conifer seed predation by deer mice. J. Wildl. Manage. 43: 861-871.

Svendsen, G. (1964) Comparative reproduction and development in two species of mice in the genus *Peromyscus*. Trans. Kansas Acad. Sci. 67: 527-538.

Svihla, A. (1932) A comparative life history study of the mice of the genus *Peromyscus*. Misc. Publ. Mus. Zool., Univ. Michigan 24: 1-39.

Svihla, A. (1934) Development and growth of deermice (*Peromyscus maniculatus artemisiae*). J. Mammal. 15: 99-104.

Svihla, A. (1935) Development and growth of the prairie deer mouse, *Peromyscus maniculatus bairdii*. J. Mammal. 16: 109-115.

Taitt, M. J. (1981) The effect of extra food on small rodents populations: deer mice (*Peromyscus maniculatus*). J. Anim. Ecol. 50: 111-124.

Taitt, M. J. (1985) Cycles and annual fluctuations: *Microtus townsendii* and *Peromyscus maniculatus*. Acta. Zool. Fenn. 173: 41-42.

Tannenbaum, M. G.; Pivorun, E. B. (1988) Seasonal study of daily torpor in southeastern *Peromyscus maniculatus* and *Peromyscus leucopus* from mountains and foothills. Physiol. Zool. 61: 10-16.

Tannenbaum, M. G.; Pivorun, E. B. (1989) Summer torpor in montane *Peromyscus maniculatus*. Am. Midl. Nat. 121: 194-197.

Thomas, B. (1971) Evolutionary relationships among *Peromyscus* from the Georgia Strait, Gordon, Goletas, and Scott Islands of British Columbia, Canada [Ph.D. dissertation]. Vancouver, BC: University of British Columbia.

Tomasi, T. E. (1985) Basal metabolic rates and thermoregulatory abilities in four small mammals. Can. J. Zool. 63: 2534-2537.

van Horne, B. (1982) Niches of adult and juvenile deer mice (*Peromyscus maniculatus*) in seral stages of coniferous forest. Ecology 63: 992-1003.

Vaughn, T. A. (1974) Resource allocation in some sympatric subalpine rodents. J. Mammal. 55: 764-795.

Vickery, W. L. (1981) Habitat use by northeastern forest rodents. Am. Midl. Nat. 106: 111-118.

Whitaker, J. O., Jr. (1966) Food of *Mus musculus*, *Peromyscus maniculatus bairdi*, and *Peromyscus leucopus* in Vigo County, Indiana. J. Mammal. 47: 473-486.

Wolff, J. O. (1985a) The effects of density, food, and interspecific interference on home range size in *Peromyscus leucopus* and *Peromyscus maniculatus*. Can. J. Zool. 63: 2657-2662.

Wolff, J. O. (1985b) Comparative population ecology of *Peromyscus leucopus* and *Peromyscus maniculatus*. Can. J. Zool. 63: 1548-1555.

Wolff, J. O. (1986) The effects of food on midsummer demography of white-footed mice, *Peromyscus leucopus*. Can. J. Zool. 64: 855-858.

Wolff, J. O. (1989) Social behavior. In: Kirkland, G. L.; Lane, J. N., eds. Advances in the study of *Peromyscus* (Rodentia). Lubbock, TX: Texas Tech. University Press; pp. 271-291.

Wolff, J. O.; Durr, D. S. (1986) Winter nesting behavior of *Peromyscus leucopus* and *Peromyscus maniculatus*. J. Mammal. 67: 409-412.

Wolff, J. O.; Hurlbutt, B. (1982) Day refuges of *Peromyscus leucopus* and *Peromyscus maniculatus*. J. Mammal. 63: 666-668.

Wolff, J. O.; Freeberg, H.; Dueser, R. D. (1983) Interspecific territoriality in two sympatric species of *Peromyscus* (Rodentia: Cricetidae). Behav. Ecol. Sociobiol. 12: 237-242.

Wolff, J. O.; Dueser, R. D.; Berry, D. S. (1985) Food habits of sympatric *Peromyscus leucopus* and *Peromyscus maniculatus*. J. Mammal. 66: 795-798.

Zegers, D. A.; Merritt, J. F. (1987) Seasonal changes in non-shivering thermogenesis of three small mammals (abstract only). Bull. Ecol. Soc. Am. 68: 455.

Zegers, D. A.; Merritt, J. F. (1988) Adaptations of *Peromyscus* for winter survival in an Appalachian montane forest. J. Mammal. 69: 516-523.

2.2.8. Prairie Vole (voles)

Order *Rodentia* Family *Muridae* (subfamily *Arvicolinae*). New world voles are small, herbivorous rodents that reside in all areas of the United States where good grass cover exists. Their presence is characterized by narrow runways through matted grasses. *Microtus* species are adapted to underground, terrestrial, and sometimes semiamphibious habitats (Johnson and Johnson, 1982). They are active by day and night and feed mainly on shoots, grasses, and bark (Johnson and Johnson, 1982). Voles are prey for snakes, raptors, and mammalian predators such as short-tailed shrews, badgers, raccoons, coyotes, and foxes (Eadie, 1952; Johnson and Johnson, 1982; Martin, 1956).

Selected species

The prairie vole (*Microtus ochrogaster*) represents the ground-burrowing members of this group. This vole is found in the north and central plains of the United States and in southern Canada, usually in dry places such as prairies and along fencerows and railroads. Its range has expanded eastward to West Virginia as a result of clear-cutting of forests (Jones et al., 1983). Voles are active by day or night (Johnson and Johnson, 1982). Although prairie and meadow voles usually occupy different habitats, where they coexist their population densities tend to be negatively correlated (Klatt, 1985; Krebs, 1977).

Body size. The prairie vole measures from 8.9 to 13 cm in length and has a 3.0- to 4.1-cm tail (Burt and Grossenheider, 1980). After reaching sexual maturity, voles continue to grow for several months (Johnson and Johnson, 1982). Adults weigh from 30 to 45 g (see table). Prairie voles maintain a relatively constant proportion of their body weight as fat (15 to 16 percent on a dry-weight basis) throughout the year (Fleharty et al., 1973).

Habitat. The prairie vole inhabits a wide variety of prairie plant communities and moisture regimes, including riparian, short-grass, or tall-grass communities (Kaufman and Fleharty, 1974). Prairie voles prefer areas of dense vegetation, such as grass, alfalfa, or clover (Carroll and Getz, 1976); their presence in a habitat depends on suitable cover for runways (Kaufman and Fleharty, 1974). They will tolerate sparser plant cover than the meadow vole because the prairie vole usually nests in burrows at least 50 mm underground or in grass nests under logs or boards (Klatt and Getz, 1987).

Food Habits. Meadow voles, as other voles, are largely herbivorous, consuming primarily green succulent vegetation but also roots, bark, seeds, fungi, arthropods, and animal matter (Johnson and Johnson, 1982; Lomolino, 1984; Stalling, 1990). Voles have masticatory and digestive systems that allow them to digest fibrous grasses such as cereals (Johnson and Johnson, 1982). Diet varies by season and habitat according to plant availability, although meadow and other voles show a preference for young, tender vegetation (Johnson and Johnson, 1982; Martin, 1956). Voles can damage pastures, grasslands, crops such as hay and grain, and fruit trees (by eating bark and roots) (Johnson and Johnson, 1982).

Temperature regulation and molt. Unlike some other mammals, prairie voles do not hibernate or exhibit torpor (Johnson and Johnson, 1982). They overwinter without using their lipid reserves, finding food to meet their metabolic requirements year-round (Fleharty et al., 1973). Prairie voles use burrows, runways, nests, and snow cover to help maintain their body temperature. They also modify when they are active to avoid excessively hot or cold temperatures (Johnson and Johnson, 1982). Voles undergo three molts (juvenile, subadult, and adult), and molting may occur at any time during the year (Jameson, 1947, as cited in Stalling, 1990). The subadult-to-adult molt occurs between 8 and 12 weeks of age (Martin, 1956).

Breeding activities and social organization. Prairie voles are monogamous; a mated pair occupies the same home range (Thomas and Birney, 1979). Reproduction occurs throughout the year, and gestation lasts approximately 3 wk (Martin, 1956; Keller, 1985; Nadeau, 1985). Both sexes care for the young; paternal activities include runway construction, food caching, grooming, retrieving, and brooding the young (Thomas and Birney, 1979). The young are weaned by about 3 weeks of age (Thomas and Birney, 1979). Reproductive activity peaks from May to October, coinciding with high moisture availability (Martin, 1956; Keller, 1985). Monogamous family units apparently defend territories against other family groups (Ostfeld et al., 1988; Johnson and Johnson, 1982; Thomas and Birney, 1979).

Home range and resources. Prairie voles excavate underground nests that are used as nurseries, resting areas, and as shelter from severe weather (Klatt and Getz, 1987). They spend very little time away from this nest (Barbour, 1963). In thick vegetation, prairie voles move about in surface runways, and the number of runways is proportional to population density (Carroll and Getz, 1976). Female home range size decreases with increasing prairie vole density according to the following regression equation (Gaines and Johnson, 1982):

$Y = -0.23X + 20.16$ where Y= home range length in meters and X= minimum number alive per 0.8 ha grid.

Abramsky and Tracy (1980) found a similar correlation using both sexes according to the equation:

$Y = -0.20X + 27.12$ where Y= home range length in meters and X=number of individuals per hectare.

Population dynamics. Female prairie voles can reach sexual maturity in about 35 d, males in 42 to 45 d (Gier and Cooksey, 1967, as cited in Stalling, 1990). Martin (1956) found in Kansas that females mature within about 6 wk in the summer, but may require 15 wk or more to mature if born in the fall. Male prairie voles tend to disperse from their natal site; approximately twice as many females as males mature near their birthplace (Boonstra et al., 1987). Populations tend to fluctuate with available moisture (Gier, 1967, as cited in Stalling, 1990). Mortality rates in prairie vole postnestling juveniles and young adults are similar and higher than adult mortality rates; nestlings have the lowest mortality rate (Golley, 1961). Average life expectancy in the field is about 1 yr (Martin, 1956).

Similar species (from general references)

- The pine vole (*Microtus pinetorum*) (7 to 11 cm), despite its name, usually inhabits deciduous forest floors, among a thick layer of duff, where it tunnels through loose soil near the surface. It is found in the eastern half of the United States, except Florida; in the south, it inhabits pine forests. In addition to feeding on bark, it burrows for bulbs, tubers, and corms.

- See also similar species listed for the meadow vole in this chapter.

General references

Burt and Grossenheider (1980); Johnson and Johnson (1982); Stalling (1990); Tamarin (1985).

Prairie Vole (*Microtus ochrogaster*)

Factors	Age/Sex/ Cond./Seas.	Mean	Range or (95% CI of mean)	Location	Reference	Note No.
Body Weight (g)	A B	41.6		ne Colorado	Abramsky & Tracy, 1980	
	A B summer	41.9		ne Colorado	Abramsky & Tracy, 1980	
	A B fall	44.2				
	A B winter	39.0				
	A B spring	41.3				
	A M	31.3 ± 0.35 SE		s Indiana	Myers & Krebs, 1971	
	A F	33.3 ± 0.30 SE				
	neonate B	2.8 ± 0.4 SD		ne Kansas	Martin, 1956	
Metabolic Rate (lO_2/kg-d)	A winter	51.8 ± 8.2 SD		NS/lab	Wunder et al., 1977	
	A summer	41.8 ± 4.8 SD				
Metabolic Rate (kcal/kg-d)	A B basal	177			estimated	1
	A B free-living	399	(190 - 833)		estimated	2
Food Ingestion Rate (g/g-d)	A B at 21°C	0.13 - 0.14		Illinois/lab	Dice, 1922	3
	A B at 28°C	0.09 - 0.10				
Water Ingestion Rate (g/g-d)	A B	0.37		NS/lab	Chew, 1951	4
	A B	0.29 ± 0.02 SE		Kansas/lab	Dupre, 1983	5
	A B	0.21	0.15 to 0.26	Illinois/lab	Dice, 1922	6
	A B	0.14			estimated	7
Inhalation Rate (m^3/d)	A B	0.043			estimated	8
Surface Area (cm^2)	A B	139			estimated	9

Prairie Vole (*Microtus ochrogaster*)

Dietary Composition	Spring	Summer	Fall	Winter	Location/Habitat (measure)	Reference	Note No.
Sporobolus asper		19.5			Kansas/forb and grass field	Fleharty & Olson, 1969	
Kochia scoparia		22.5					
Bouteloua gracilis		6.5			(% volume; stomach contents)		
Bromus japonicus		8.5					
Rumex crispus		9.2					
Triticum aestivum		3.4			(Items less than 2% of volume were combined as "other")		
Carex sp.		2.0					
other		28.3					
(grasses)		(53.5)					
(forbs)		(46.5)					
Festuca arundinacea	20.5	25.0	10.6	28.9	Missouri/old field	Cook et al., 1982	
Dactylis glomerata	6.7	1.7	1.1	4.2			
Phleum pratense	8.3	2.0	2.1	5.3	(mean number of food items; stomach contents)		
Tridens flavus	17.1	11.1	1.9	11.0			
Setaria viridis	6.7	6.2	1.7	6.2			
Taraxacum officinale	5.8	4.8	3.9	1.5	(Plant parts consumed: leaf, stem, and seeds of *Festuca* and *Bromus*; leaf and stem of *Tridens* and *Setaria faberi*; leaf and seeds of *Dactylis* and *Seteria viridis*; and leaves only of all other plant species)		
Lamium amplexicaule	3.9	2.9	5.2	3.4			
Bromus tectorum	2.8	4.7	2.5	4.8			
Setaria faberi	5.6	3.9	0.7	21.0			
Capsella bursa-past.	2.7	1.2	0.5	0.6			
Trifolium stolonifera	2.4	0.8	0.5	1.4			
arthropods	0.2	0.3	0.0	0.1			
animal material	0	0.2	0.2	0.0			
other	3.9	1.4	1.5	0.9			

Population Dynamics			Range			Note No.
Home Range Size (ha)	A B all yr	0.098 ± 0.012 SE		Illinois/bluegrass	Jike et al., 1988	
	A M all yr	0.037 ± 0.0029 SE		Kansas/NS	Swihart & Slade, 1989	
	A F all yr	0.024 ± 0.0018 SE				
	A M	0.011		ne Colorado/short-grass prairie	Abramsky & Tracy, 1980	
	A F	0.0073				

Prairie Vole (*Microtus ochrogaster*)

Population Dynamics	Age/Sex/ Cond./Seas.	Mean	Range	Location/Habitat	Reference	Note No.
Population Density (N/ha)	summer winter	25 - 35 12		w Nebraska/xeric prairie	Meserve, 1971	
	spring summer	78 - 118 81 - 104		Illinois/alfalfa field	Carroll & Getz, 1976	
	summer winter spring fall	168 - 234 160 - 197 203 - 247 94 - 123		ne Kansas/grassland	Martin, 1956	
Litter Size		3.18 ± 0.24 SD 3.4 4.25	1 - 7	ne Kansas/grassland Kansas/NS Illinois/NS	Martin, 1956 Jameson, 1947 Cole & Batzli, 1978	10 11 12
Litters/Year		several		NS/NS	Johnson & Johnson, 1982	
Days Gestation		21 21		ne Kansas/grassland NS/NS	Martin, 1956 Keller, 1985	
Pup Growth Rate (g/d)	days 1 to 10 days 11 to 30 > 30 d until growth stops	0.6 1.0 0.5 (highly variable)		ne Kansas/grassland	Martin, 1956	
Age at Weaning		21 days		NS/lab	Thomas & Birney, 1979	
Age at Sexual Maturity	F M	35 days	42 to 45 d	NS/NS	Gier & Cooksey, 1967	13
Annual Mortality	B	93 %		ne Colorado/short-grass prairie	Abramsky & Tracy, 1980	
Longevity	B	1 yr	up to 1.8 yr	ne Kansas/grassland	Martin, 1956	

Prairie Vole (*Microtus ochrogaster*)

Seasonal Activity	Begin	Peak	End	Location	Reference	Note No.
Mating		May to Oct		NS	Keller, 1985; Martin, 1956	
Parturition		May to Oct		NS	Keller, 1985; Martin, 1956	
Molt		any time		NS	Jameson, 1947	13

1 Estimated using equation 3-43 (Boddington, 1978) and body weights (summer) from Abramsky and Tracy (1980).
2 Estimated using equation 3-48 (Nagy, 1987) and body weights (summer) from Abramsky and Tracy (1980).
3 Estimated from ingestion rate for diet of oats (74 to 78 percent of total weight of diet) and dry grass, assuming 31 to 34 g body weight. Diet was low in water (probably less than 10 percent).
4 Measured water drunk from water bottles; diet consisted of rolled oats with sunflower seeds; temperature 28°C.
5 Measured water drunk; diet of dry food.
6 Temperature 21°C; dry air.
7 Estimated using equation 3-17 (Calder and Braun, 1983) and body weights (summer) from Abramsky and Tracy (1980).
8 Estimated using equation 3-20 (Stahl, 1967) and body weights (summer) from Abramsky and Tracy (1980).
9 Estimated using equation 3-22 (Stahl, 1967) and body weights (summer) from Abramsky and Tracy (1980).
10 Determined from pup count, which may underestimate litter size at birth.
11 Cited in Keller (1985); embryo or pup count.
12 Cited in Keller (1985); embryo or placental scar count.
13 Cited in Stalling (1990).

References (including Appendix)

Abramsky, Z.; Tracy, C. R. (1980) Relation between home range size and regulation of population size in *Microtus ochrogaster*. Oikos 34: 347-355.

Agnew, W. J.; Uresk, D. W.; Hansen; et al. (1988) Arthropod consumption by small mammals on prairie dog colonies and adjacent ungrazed mixed grass prairie in western South Dakota. In: Uresk, D. W.; Schenbeck, G. L.; Cefkin, R., tech. coord. Eighth Great Plains wildlife damage control workshop proceedings; April 28-30, 1987; Rapid City, South Dakota. Fort Collins, CO: U.S. Department of Agriculture, Forest Service, Rocky Mountain Forest and Range Experiment Station; pp. 81-87.

Barbour, R. W. (1963) *Microtus*: a simple method of recording time spent in the nest. Science 141: 41.

Boddington, M. J. (1978) An absolute metabolic scope for activity. J. Theor. Biol. 75: 443-449.

Boonstra, R.; Krebs, C. J.; Gaines, M. S.; et al. (1987) Natal philopatry and breeding systems in voles (*Microtus* spp.). J. Anim. Ecol. 56: 655-673.

Bradley, S. R. (1976) Temperature regulation and bioenergetics of some microtine rodents [Ph.D. dissertation]. Ithaca, NY: Cornell University.

Burt, W. H.; Grossenheider, R. P. (1980) A field guide to the mammals of North America north of Mexico. Boston, MA: Houghton Mifflin Co.

Calder, W. A.; Braun, E. J. (1983) Scaling of osmotic regulation in mammals and birds. Am. J. Physiol. 244: R601-R606.

Carroll, D.; Getz, L. L. (1976) Runway use and population density in *Microtus ochrogaster*. J. Mammal. 57: 772-776.

Chew, R. M. (1951) The water exchanges of some small mammals. Ecol. Monogr. 21: 215-225.

Cole, F. R.; Batzli, G. O. (1978) Influence of supplemental feeding on a vole population. J. Mammal. 59: 809-819.

Colvin, M. A.; Colvin, D. V. (1970) Breeding and fecundity of six species of voles (*Microtus*). J. Mammal. 51: 417-419.

Cook, J. C.; Topping, M. S.; Stombaugh, T. A. (1982) Food habits of *Microtus ochragaster* and *Peromyscus maniculatus* in sympatry. Trans. Missouri Acad. Sci. 16: 17-23.

Corthum, D. W., Jr. (1967) Reproduction and duration of placental scars in the prairie vole and the eastern vole. J. Mammal. 48: 287-292.

Dice, L. R. (1922) Some factors affecting the distribution of the prairie vole, forest deer mouse, and prairie deer mouse. Ecology 3: 29-47.

Dupre, R. K. (1983) A comparison of the water relations of the hispid cotton rat, *Sigmodon hispidus*, and the prairie vole, *Michrotus ochrogaster*. Comp. Biochem. Physiol. 75A: 659-663.

Eadie, R. W. (1952) Shrew predation and vole populations on a localized area. J. Mammal. 33: 185-189.

Fitch, H. S. (1957) Aspects of reproduction and development in the prairie vole (*Microtus ochrogaster*). Univ. Kansas Publ., Mus. Nat. Hist. 10: 129-161.

Fleharty, E. D.; Olson, L. E. (1969) Summer food habits of *Michrotus ochrogaster* and *Sigmodon hispidus*. J. Mammal. 50: 475-486.

Fleharty, E. D.; Krause, M. E.; Stinnett, D. P. (1973) Body composition, energy content, and lipid cycles of four species of rodents. J. Mammal. 54: 426-438.

Gaines, M. S.; Johnson, M. L. (1982) Home range size and population dynamics in the prairie vole, *Microtus ochrogaster*. Oikos 39: 63-70.

Gaines, M. S.; Rose, R. K. (1976) Population dynamics of *Microtus ochrogaster* in eastern Kansas. Ecology 57: 1145-1161.

Getz, L. L.; Hofmann, J. E.; Klatt, B. J.; et al. (1987) Fourteen years of population fluctuations of *Microtus ochrogaster* and *M. pennsylvanicus* in east central Illinois. Can. J. Zool. 65: 1317-1325.

Gier, H. T. (1967) The Kansas small mammal census: terminal report. Trans. Kansas Acad. Sci. 70: 505-518.

Gier, H. T.; Cooksey, B. F., Jr. (1967) *Michrotus ochrogaster* in the laboratory. Trans. Kansas Acad. Sci. 70: 256-265.

Golley, F. B. (1961) Interaction of natality, mortality and movement during one annual cycle in a *Microtus* population. Am. Midl. Nat. 66: 152-159.

Harvey, M. J.; Barbour, R. W. (1965) Home range of *Microtus ochrogaster* as determined by a modified minimum area method. J. Mammal. 46: 398-402.

Jameson, E. W., Jr. (1947) Natural history of the prairie vole (mammalian genus *Michrotus*). Misc. Publ. Mus. Nat. Hist. Univ. Kansas 1: 125-151.

Jike, L.; Batzli, G. O.; Getz, L. L. (1988) Home ranges of prairie voles as determined by radiotracking and by powdertracking. J. Mammal. 69: 183-186.

Johnson, M. L.; Johnson, S. (1982) Voles (*Microtus* species). In: Chapman, J. A.; Feldhamer, G. A., eds. Wild mammals of North America. Baltimore, MD: Johns Hopkins University Press; pp. 326-353.

Jones, J. K. Jr.; Armstrong, R. S.; Hoffman, R. S.; et al. (1983) Mammals of the Great Northern Plains. Lincoln, NE: University of Nebraska Press.

Kaufman, D. W.; Fleharty, E. D. (1974) Habitat selection by nine species of rodents in north-central Kansas. Southwest. Nat. 18: 443-451.

Keller, B. L. (1985) Reproductive patterns. In: Tamarin, R. H., ed. Biology of new world *Microtus*. American Society of Mammalogists; Special Publication No. 8; pp. 725-778.

Keller, B. L.; Krebs, C. J. (1970) *Microtus* population biology. III. Reproductive changes in fluctuating populations of *M. ochrogaster* and *M. pennsylvanicus* in southern Indiana, 1965-1967. Ecol. Monogr. 40: 263-294.

Kenney, A. M.; Evans, R. L.; Dewsbury, D. A. (1977) Postimplantation pregnancy disruption in *Microtus orchogaster*, *Microtus pennsylvanicus*, and *Peromyscus maniculatis*. J. Reprod. Fert. 49: 365-367.

Klatt, B. J. (1985) The role of habitat preference and interspecific competition in determining the local distribution of *Microtus pennsylvanicus* and *M. ochrogaster* in central Illinois (abstract). Bull. Ecol. Soc. Am. 66: 209.

Klatt, B. J.; Getz, L. L. (1987) Vegetation characteristics of *Microtus ochragaster* and *M. pennsylvanicus* habitats in east-central Illinois. J. Mammal. 68: 569-577.

Krebs, C. J. (1977) Competition between *Microtus pennsylvanicus* and *Microtus ochragaster*. Am. Midl. Nat. 97: 42-49.

Kruckenberg, S. M.; Gier, H. T.; Dennis, S. M. (1973) Postnatal development of the prairie vole, *Microtus ochrogaster*. Lab. Anim. Sci. 23: 53-55.

Lomolino, M. V. (1984) Immigrant selection, predation, and the distribution of *Microtus pennsylvanicus* and *Blarina brevicauda* on islands. Am. Nat. 123: 468-483.

Martin, E. P. (1956) A population study of the prairie vole (*Michrotus ochragaster*) in northeastern Kansas. Univ. Kansas Publ. Mus. Nat. Hist. 8: 361-416.

Martin, E. P. (1960) Distribution of native mammals among the communities of the mixed prairie. Fort Hays Stud. N. S. Sci. Ser. 1: 1-26.

Meserve, P. L. (1971) Population ecology of the prairie vole, *Microtus ochrogaster*, in the western mixed prairie of Nebraska. Am. Woodl. Nat. 86: 417-433.

Morrison, P. R.; Dieterich, R.; Preston, D. (1976) Breeding and reproduction of fifteen wild rodents maintained as laboratory colonies. Lab. Anim. Care 26: 237-243.

Myers, J. H.; Krebs, C. J. (1971) Genetic, behavioral, and reproductive attributes of dispersing field voles *Microtus pennsylvanicus* and *Michrotus ochrogaster*. Ecol. Monogr. 41: 53-78.

Nadeau, J. H. (1985) Ontogeny. In: Tamarin, R. H., ed. Biology of new world *Microtus*. Spec. Publ. Amer. Soc. Mammal. 8; pp. 254-285.

Nagy, K. A. (1987) Field metabolic rate and food requirement scaling in mammals and birds. Ecol. Monogr. 57: 111-128.

Ostfeld, R. S.; Pugh, S. R.; Seamon, J. O.; et al. (1988) Space use and reproductive success in a population of meadow voles. J. Anim. Ecol. 57: 385-394.

Quick, F. W. II (1970) Small mammal populations in an old field community [Ph.D. dissertation]. Louisville, KY: University of Louisville.

Richmond, M. E. (1967) Reproduction of the vole, *Microtus orchogaster* [Ph.D. dissertation]. Columbia, MO: University of Missouri.

Richmond, M. E.; Conaway, C. H. (1969) Management, breeding and reproductive performance of the vole, *Microtus ochrogaster* in a laboratory colony. Lab. Anim. Care 19: 80-87.

Rolan, R. G.; Gier, H. T. (1967) Correlation of embryo and placental scar counts of *Peromyscus maniculatis* and *Microtus orchogaster*. J. Mammal. 48: 317-319.

Rose, R. K.; Gaines, M. S. (1978) The reproductive cycle of *Microtus orchogaster* in eastern Kansas. Ecol. Monogr. 48: 21-42.

Stahl, W. R. (1967) Scaling of respiratory variables in mammals. J. Appl. Physiol. 22: 453-460.

Stalling, D. T. (1990) *Microtus ochrogaster*. American Society of Mammalogists; Mammalian Species No. 355; 9 pp.

Swihart, R. K.; Slade, N. A. (1989) Differences in home-range size between sexes of *Microtus ochrogaster*. J. Mammal. 70: 816-820.

Tamarin, R. H. (1985) Biology of new world *Microtus*. Spec. Publ. Amer. Soc. Mammal. 8.

Thomas, J. A.; Birney, E. C. (1979) Parental care and mating system of the prairie vole, *Microtus ochrogaster*. Behav. Ecol. Sociobiol. 5: 171-186.

Wooster, L. D. (1939) An ecological evaluation of predatees on a mixed prairie area in western Kansas. Trans. Kans. Acad. Sci. 42: 515-517.

Wunder, B. A. (1985) Energetics and thermoregulation. In: Tamarin, R. H., ed. Biology of new world *Microtus*. Spec. Publ. Amer. Soc. Mammal. 8; pp. 812-844.

Wunder, B. A.; Dobkin, D. S.; Gettinger, R. D. (1977) Shifts of thermogenesis in the prairie vole (*Microtus ochrogaster*), strategies for survival in a seasonal environment. Oecologia (Berl.) 29: 11-26.

Zimmerman, E. G. (1965) A comparison of habitat and food of two species of *Microtus*. J. Mammal. 46: 605-612.

2.2.9. Meadow Vole (voles)

Order *Rodentia* Family *Muridae* (subfamily *Arvicolinae*). New world voles are small, herbivorous rodents that reside in all areas of Canada and the United States where there is good grass cover. Their presence is characterized by narrow runways through matted grasses. *Microtus* species are adapted to underground, terrestrial, and sometimes semiamphibious habitats (Johnson and Johnson, 1982). They are active by day and night, feeding mainly on shoots, grasses, and bark. Voles are prey for hawks and owls as well as several mammalian predators such as short-tailed shrews, badgers, and foxes (Johnson and Johnson, 1982; Eadie, 1952).

Selected species

The meadow vole (*Microtus pennsylvanicus*) makes its burrows along surface runways in grasses or other herbaceous vegetation. It is the most widely distributed small grazing herbivore in North America and is found over most of the northern half of the United States. Meadow voles have been used in bioassays to indicate the presence of toxins in their foods (Kendall and Sherwood, 1975, cited in Reich, 1981; Schillinger and Elliot, 1966). Although primarily terrestrial, the meadow vole also is a strong swimmer (Johnson and Johnson, 1982).

Body size. The meadow vole measures 8.9 to 13 cm in length (head and body) and has a 3.6- to 6.6-cm tail. They weigh between 20 and 40 g depending on age, sex, and location (see table). Mature males are approximately 20 percent heavier than females (Boonstra and Rodd, 1983). Meadow voles lose weight during the winter, reaching a low around February, then regain weight during spring and summer, reaching a high around August in many populations (see table; Iverson and Turner, 1974).

Habitat. The meadow vole inhabits grassy fields, marshes, and bogs (Getz, 1961a). Compared with the prairie vole, the meadow vole prefers fields with more grass, more cover, and fewer woody plants (Getz, 1985; Zimmerman, 1965). The meadow vole also tends to inhabit moist to wet habitats, whereas the prairie vole is relatively uncommon in sites with standing water (Getz, 1985).

Food habits. Meadow voles consume green succulent vegetation, sedges, seeds, roots, bark, fungi, insects, and animal matter (see table). They are agricultural pests in some areas, feeding on pasture, hay, and grain (Johnson and Johnson, 1982; Burt and Grossenheider, 1980). At high population densities, the meadow vole has been known to girdle trees, which can damage orchards (Byers, 1979, cited in Reich, 1981). In seasonal habitats, meadow voles favor green vegetation when it is available and consume other foods more when green vegetation is less available (Johnson and Johnson, 1982; Riewe, 1973; Getz, 1985). Although Zimmerman (1965) found some evidence of food selection, he found that meadow voles generally ate the most common plants in their habitat. Meadow voles living on prairies consume more seeds and fewer dicots and monocots than voles in a bluegrass habitat (Lindroth and Batzli, 1984). The meadow vole's large cecum allows it to have a high digestive efficiency of 86 to 90 percent (Golley, 1960). Coprophagy (eating of feces) has been observed in this species (Ouellete and Heisinger, 1980).

Temperature regulation and molt. In winter, *Microtus* species do not undergo hibernation or torpor; instead, they are active year round (Didow and Hayward, 1969; Johnson and Johnson, 1982). Behaviors that help meadow voles to maintain their body temperature include the use of burrows, runways, nests, and snow cover for insulation. They also can change when they are active; when temperatures exceed 20°C, meadow voles are most active at night (Getz, 1961b; Johnson and Johnson, 1982). In winter, meadow voles increase their brown fat content (a major site of thermoregulatory heat production). Mature individuals average 0.5 percent brown fat in summer, increasing to 1.7 percent in early winter; juveniles average 1.0 percent in the summer, increasing to 2.3 percent in the winter (Didow and Hayward, 1969). Voles undergo three molts: juvenile, postjuvenile, and adult. The timing varies by species (Johnson and Johnson, 1982). Adult *Arvicolinae* also undergo winter and summer molts (Johnson and Johnson, 1982).

Breeding activities and social organization. Meadow voles are polygynous (McShea, 1989). Males form a hierarchy in which the most dominant male voles breed (Boonstra and Rodd, 1983). Voles produce litters throughout the breeding season, the number of litters per season increases with decreasing latitude (Johnson and Johnson, 1982).

Home range and resources. The area encompassed by a meadow vole's home range depends on season, habitat, population density, and the age and sex of the animal. Summer ranges tend to be larger than winter ranges, and ranges in marshes tend to be larger than ranges in meadows (Getz, 1961c; Reich, 1981). Home range size also declines with increasing population density (Getz, 1961c; Tamarin, 1977a). Female meadow voles defend territories against other females, whereas male home ranges are larger and overlap with home ranges of both sexes (Madison, 1980; Ostfeld et al., 1988; Wolff, 1985). Meadow voles build runways in grasses and vegetation at the ground's surface and use the runways for foraging about 45 percent of the time, depending on weather and other factors (Gauthier and Bider, 1987). The meadow vole exhibits daytime activity where dense cover is available and becomes more crepuscular with less cover (Graham, 1968, cited in Reich, 1981). All *Microtus* species apparently do some burrowing, excavating underground nests that are used as nurseries, resting areas, and as shelter from severe weather (Johnson and Johnson, 1982). Nests are built with the use of dead grass in patches of dense, live grass; widened spaces, called forms, are used off main runways (Ambrose, 1973).

Population density. Meadow vole population densities fluctuate widely from season to season and year to year, sometimes crashing to near zero before recovering in a few years to densities of several hundred per hectare (Boonstra and Rodd, 1983; Lindroth and Batzli, 1984; Getz et al., 1987; Myers and Krebs, 1971; Taitt and Krebs, 1985). Krebs and Myers (1974) noted population cycles of 2 to 5 yr, whereas Tamarin (1977b) reported 3- to 4-year population cycles in southeastern Massachusetts. However, Getz et al. (1987) found no indication of multiannual abundance cycles in their three habitat study (i.e., bluegrass, tallgrass prairie, and alfalfa) in east central Illinois. Meadow voles avoid short-tailed shrews (Fulk, 1972), and the vole population density decreases as the number of short-tailed shrews in the area increases (Eadie, 1952).

Population dynamics. Voles reach sexual maturity usually within several weeks after birth, with females maturing before males, but still continue to grow for several months (Johnson and Johnson, 1982). Innes (1978) reported that litter size is independent of latitude or elevation. However, summer litters were, on average, 14 percent larger than litters produced during other seasons, and larger females produced larger litters (Keller and Krebs, 1970). Young from the spring and early summer litters reached adult weight in about 12 wk (Brown, 1973). Mortality rates are highest in postnestling juveniles and young adults and lowest in nestlings (ages 1 to 10 d) (Golley, 1961). Dispersing meadow voles (predominantly young males) tend to weigh less than resident meadow voles (Boonstra et al., 1987; Myers and Krebs, 1971; Boonstra and Rodd, 1983; Brochu et al., 1988).

Similar species (from general references)

- The California vole (*Microtus californicus*) is larger than the meadow vole (12 to 14 cm head and body) and is found throughout California and southern Oregon. It inhabits freshwater and saltwater marshy areas, wet meadows, and grassy hillsides from the seashore to the mountains and feeds on green vegetation.

- Townsend's vole (*Microtus townsendii*) usually is found near water in moist fields, sedges, tules, and meadows (from tidewater to alpine meadows). Its range is limited to extreme northwestern California, western Oregon and Washington, and southern British Columbia (inhabits several islands off the coast of Washington and British Columbia). It is easily distinguished by its large size (12 to 16 cm) and black-brown color.

- The montane vole (*Microtus montanus*) (mountain vole) is slightly larger (10 to 14 cm) than the meadow vole and is found in valleys of the mountainous Great Basin area of the western and northwestern United States.

- The long-tailed vole (*Microtus longicaudus*) (tail 5 to 9 cm) is slightly larger (11 to 14 cm) than the meadow vole. It is found in the western United States and Canada to Alaska and lives along streambanks, in mountain meadows, sometimes in dry situations, and in brushy areas during winter. In addition to grasses and bark, it feeds on bulbs. It nests above ground in winter and burrows in summer.

- The creeping vole (*Microtus oregoni*) (Oregon vole) (10 to 11 cm) is an inhabitant of western Oregon and Washington and extreme northwest California. Seldom above ground, it spends most of its time burrowing through forest floor duff or grass roots. It lives in forests, brush, and grassy areas.

- The sagebrush vole (*Lagurus curtatus*) (9.7 to 11 cm) lives in loose soil and arid conditions and feeds on green vegetation, especially sagebrush. It also burrows around sagebrush; a vole found living in sagebrush is almost certainly this species.

General references

Burt and Grossenheider (1980); Reich (1981); Johnson and Johnson (1982); Tamarin (1985).

Meadow Vole (*Microtus pennsylvanicus*)

Factors	Age/Sex/ Cond./Seas.	Mean	Range or (95% CI of mean)	Location	Reference	Note No.
Body Weight (g)	A M summer	40.0 ± 8.3 SE		Quebec, Canada	Brochu et al., 1988	
	A F summer	33.4 ± 8.2 SE				
	A M spring	52.4		Ontario, Canada	Boonstra & Rodd, 1983	
	A F spring	43.5				
	A M & F			Manitoba, Canada	Anderson et al., 1984	
	spring	26.0				
	summer	24.3				
	fall	17.0				
	winter	17.5				
	A M avg. all yr	35.5 ± 0.1 SE		south Indiana	Myers & Krebs, 1971	
	A F avg. all yr	39.0 ± 0.3 SE				
	neonate M & F	2.1	1.6 - 3.0	not specified	Hamilton, 1941	1
	neonate M & F	2.3 ± 0.1 SD			Innes & Millar, 1981	2
Pup Growth Rate (g/d)	birth - 21 days	0.95		south Michigan/old field	Golley, 1961	
	22 - 33 days	0.81				
	34 - 54 days	0.45				
	55 - 103 days	0.19				
Body Fat (g)	summer:			Alberta, Canada	Millar, 1987	
	J F	0.37 ± 0.04 SE				
	A F gestating	1.20 ± 0.15 SE				
	A F lactating	0.60 ± 0.09 SE				
Metabolic Rate (IO_2/kg-d)	basal	60.0		lab	Wiegert, 1961	3
	average daily	82.8 ± 12 SD	43.2 - 146	lab	Morrison, 1948	4
Metabolic Rate (kcal/kg-d)	A M basal	166			estimated	5
	A F basal	175				
	A B avg. daily	395		lab 25-30°C	Pearson, 1947	
	A M free-living	357	(170 - 747)		estimated	6
	A F free-living	485	(231 - 1,020)			

Meadow Vole (*Microtus pennsylvanicus*)

Factors	Age/Sex/ Cond./Seas.	Mean	Range or (95% CI of mean)	Location	Reference	Note No.
Food Ingestion Rate (g/g-d)		0.30 - 0.35		Russia	Ognev, 1950	7
(cal/g-d)	A M short-day A M long-day	370 ± 20 SE 410 ± 10 SE		NS	Dark et al., 1983	8
Water Ingestion Rate (g/g-d)	A B	0.21 ± 0.02 SE		NS	Ernst, 1968	9
	A B	0.14			estimated	10
Inhalation Rate (m^3/d)	A M A F	0.052 0.044			estimated	11
Surface Area (cm^2)	A M A F	161 143			estimated	12

Dietary Composition	Spring	Summer	Fall	Winter	Location/Habitat (measure)	Reference	Note No.
dicot shoots	41	60	66	12	Illinois/bluegrass	Lindroth & Batzli, 1984	
monocot shoots	50	26	9	40			
seeds	1	9	1	13	(% volume; stomach contents)		
roots	0	1	12	34			
fungi	6	4	10	0			
insects	2	0	2	1			
dicot shoots	53	65	41	41	Illinois/tallgrass prairie	Lindroth & Batzli, 1984	
monocot shoots	23	29	12	5			
seeds	7	1	16	36	(% volume; stomach contents)		
roots	4	0	6	17			
fungi	12	1	20	0			
insects	1	4	5	1			

Meadow Vole (*Microtus pennsylvanicus*)

Population Dynamics	Age/Sex/ Cond./Seas:	Mean	Range	Location/Habitat	Reference	Note No.
Home Range Size (ha)	A M summer A F summer	0.019 ± 0.011 SD 0.0069 ±0.0039 SD		Virginia/old field	Madison, 1980	
	A B summer A B winter	0.014 0.0002		Montana/alluvial bench	Douglass, 1976	
	A M summer A F summer	0.083 ± 0.037 SD 0.037 ± 0.020 SD		Massachusetts/grassy meadow	Ostfeld et al., 1988	
Population Density (N/ha)	A B A B A B		96 - 549 2 - 28 25 - 163	Ontario, Canada/grassland Illinois/bluegrass Indiana/grassland	Boonstra & Rodd, 1983 Lindroth & Batzli, 1984 Myers & Krebs, 1971	
	fall winter spring summer		28 - 51 20 - 51 22 - 53 38 - 64	Michigan/grass-sedge marsh	Getz, 1961a	
Litter Size		3.82 4.46 6.05	1 - 11 1 - 9 1 - 8	Manitoba, Canada/NS Indiana/NS Pennsylvania/NS	Iverson & Turner, 1976 Corthum, 1967 Goin, 1943	13 13 13
Litters/Year		several		NS/NS	Bailey, 1924	14
Days Gestation		21.0 ± 0.2 SD		NS/NS	Kenney et al., 1977	2
Age at Weaning (d)		21		s Michigan/NS	Golley, 1961	
Age at Sexual Maturity	F M		at least 3 wk at least 6-8 wk	NS/NS	Johnson & Johnson, 1982	
Mortality Rates	nestlings juveniles young adults adults old adults	(0-10 g) 50% (11-20 g) 61% (21-30 g) 58% (31-50 g) 53% (>50 g) 100%		south Michigan/old field	Golley, 1961	

Meadow Vole (*Microtus pennsylvanicus*)

Population Dynamics	Age/Sex/ Cond./Seas.	Mean	Range	Location/Habitat	Reference	Note No.
Longevity		2-3 mo		NS	Beer & MacLeod, 1961	9
			< 24 mo	NS	Johnson & Johnson, 1982	
			End			Note No.
	early April		mid-October	Manitoba, Canada	Mihok, 1984	
		Oct. - Nov.		Michigan (fall-winter peak)	Getz, 1960	15
		April - June		Michigan (spring-summer peak)	Getz, 1960	15
		fall/winter		Indiana/grassland	Myers & Krebs, 1971	
		summer (females) winter (males)		Massachusetts/coastal field	Tamarin, 1977b	

1 Cited in Reich (1981) and Johnson and Johnson (1982).
2 Cited in Nadeau (1985).
3 Body weight 35.6 g; temperature not specified; cited in Deavers and Hudson (1981).
4 Temperature 15 to 25°C; weight 26.2 to 32 g.
5 Estimated using equation 3-43 (Boddington, 1978) and body weights from Anderson et al. (1984).
6 Estimated using equation 3-48 (Nagy, 1987) and body weights from Anderson et al. (1984).
7 Cited in Johnson and Johnson (1982).
8 Short-day photoperiod = 10 h of light, 14 of dark; long-day photoperiod = 14 h of light, 10 of dark.
9 Cited in Reich (1981).
10 Estimated using equations 3-17 (Calder and Braun, 1983) and 3-18 and body weights from Anderson et al. (1984).
11 Estimated using equation 3-20 (Stahl, 1967) and body weights from Anderson et al. (1984).
12 Estimated using equation 3-22 (Stahl, 1967) and body weights from Anderson et al. (1984).
13 Cited in Keller (1985).
14 Cited in Johnson and Johnson (1982).
15 Cited in Getz (1961b).

References (including Appendix)

Ambrose, H. W., III. (1973) An experimental study of some factors affecting the spatial and temporal activity of *Microtus pennsylvanicus*. J. Mammal. 54: 79-100.

Anderson, M.; Prieto, J.; Rauch, J. (1984) Seasonal changes in white and brown adipose tissues in *Clethrionomys gapperi* (red-backed vole) and in *Microtus pennsylvanicus* (meadow vole). Comp. Biochem. Physiol. A Comp. Physiol. 79: 305-310.

Bailey, V. (1924) Breeding, feeding and other life habits of meadow mice (*Microtus*). J. Agric. Res. 27: 523-526.

Barbehenn, K. R. (1955) A field study of growth in *Microtus pennsylvanicus*. J. Mammal. 36: 533-543.

Beer, J. R.; MacLeod, C. F. (1961) Seasonal reproduction in the meadow vole. J. Mammal. 42: 483-489.

Benton, A. H. (1955) Observations on the life history of the northern pine mouse. J. Mammal. 36: 52-62.

Boddington, M. J. (1978) An absolute metabolic scope for activity. J. Theor. Biol. 75: 443-449.

Boonstra, R.; Rodd, F. H. (1983) Regulation of breeding density in *Microtus pennsylvanicus*. J. Anim. Ecol. 52: 757-780.

Boonstra, R.; Krebs, C. J.; Gaines, M. S.; et al. (1987) Natal philopatry and breeding systems in voles (*Microtus* spp.). J. Anim. Ecol. 56: 655-673.

Bradley, S. R. (1976) Temperature regulation and bioenergetics of some microtine rodents [Ph.D. dissertation]. Ithaca, NY: Cornell University.

Brochu, L.; Caron, L.; Bergeron, J.-M. (1988) Diet quality and body condition of dispersing and resident voles (*Microtus pennsylvanicus*). J. Mammal. 69: 704-710.

Brooks, R. J.; Webster, A. B. (1984) Relationships of seasonal change to changes in age structure and body size in *Microtus pennsylvanicus*. Carnegie Mus. Nat. Hist. Spec. Publ. No. 10; pp. 275-284.

Brown, E. B., III. (1973) Changes in patterns of seasonal growth of *Microtus pennsylvanicus*. Ecology 54: 1103-1110.

Burt, W. H.; Grossenheider, R. P. (1980) A field guide to the mammals of North America north of Mexico. Boston, MA: Houghton Mifflin Co.

Byers, R. E. (1979) Meadow vole control using anticoagulant baits. Hort. Sci. 14: 44-45.

Calder, W. A.; Braun, E. J. (1983) Scaling of osmotic regulation in mammals and birds. Am. J. Physiol. 244: R601-R606.

Corthum, D. W., Jr. (1967) Reproduction and duration of placental scars in the prairie vole and the eastern vole. J. Mammal. 48: 287-292.

Dark, J.; Zucker, I. (1986) Photoperiodic regulation of body mass and fat reserves in the meadow vole. Physiol. Behav. 38: 851-854.

Dark, J.; Zucker, I.; Wade, G. N. (1983) Photoperiodic regulation of body mass, food intake, and reproduction in meadow voles. Am. J. Physiol. 245: R334-R338.

Deavers, D. R.; Hudson, J. W. (1981) Temperature regulation in two rodents (*Clethrionomys gapperi* and *Peromyscus leucopus*) and a shrew (*Blarina brevicauda*) inhabiting the same environment. Physiol. Zool. 54: 94-108.

Didow, L. A.; Hayward, J. S. (1969) Seasonal variations in the mass and composition of brown adipose tissue in the meadow vole, *Microtus pennsylvanicus*. Can. J. Zool. 47: 547-555.

Dieterich, R. A.; Preston, D. J. (1977) The meadow vole (*Microtus pennsylvanicus*) as a laboratory animal. Lab. Anim. Sci. 27: 494-499.

Douglass, R. J. (1976) Spatial interactions and microhabitat selections of two locally sympatric voles, *Microtus montanus* and *Microtus pennsylvanicus*. Ecology 57: 346-352.

Dueser, R. D.; Wilson, M.; Rose, R. K. (1981) Attributes of dispersing meadow voles in open-grid populations. Acta Theriol. 26: 139-162.

Eadie, R. W. (1952) Shrew predation and vole populations on a localized area. J. Mammal. 33: 185-189.

Ernst, C. H. (1968) Kidney efficiencies of three Pennsylvania mice. Trans. Kentucky Acad. Sci. 29: 21-24.

Fulk, G. W. (1972) The effect of shrews on the space utilization of voles. J. Mammal. 53: 461-478.

Gauthier, R.; Bider, J. R. (1987) The effects of weather on runway use by rodents. Can. J. Zool. 65: 2035-2038.

Getz, L. L. (1960) A population study of the vole, *Microtus pennsylvanicus*. Am. Midl. Nat. 64: 392-405.

Getz, L. L. (1961a) Factors influencing the local distribution of *Microtus* and *Synaptomys* in southern Michigan. Ecology 42: 110-119.

Getz, L. L. (1961b) Responses of small mammals to live-trap and weather conditions. Am. Midl. Nat. 66: 160-170.

Getz, L. L. (1961c) Home ranges, territoriality, and movement of the meadow vole. J. Mammal. 42: 24-36.

Getz, L. L. (1985) Habitat. In: Tamarin, R. H., ed. Biology of new world *Microtus*. Spec. Publ. Amer. Soc. Mammal. 8; pp. 286-309.

Getz, L. L.; Hofmann, J. E.; Klatt, B. J.; et al. (1987) Fourteen years of population fluctuations of *Microtus ochrogaster* and *M. pennsylvanicus* in east central Illinois. Can. J. Zool. 65: 1317-1325.

Goin, O. B. (1943) A study of individual variation in *Microtus pennsylvanicus pennsylvanicus*. J. Mammal. 24: 212-223.

Golley, F. B. (1960) Anatomy of the digestive tract of *Microtus*. J. Mammal. 41: 89-99.

Golley, F. B. (1961) Interaction of natality, mortality and movement during one annual cycle in a *Microtus* population. Am. Midl. Nat. 66: 152-159.

Graham, W. J. (1968) Daily activity patterns in the meadow vole, *Microtus pennsylvanicus* [Ph.D. dissertation]. Ann Arbor, MI: University of Michigan.

Hamilton, W. J., Jr. (1937) Growth and life span of the field mouse. Am. Nat. 71: 500-507.

Hamilton, W. J., Jr. (1941) Reproduction of the field mouse (*Microtus pennsylvanicus*). Cornell Univ. Agric. Exp. Sta. Mem. 237: 3-23.

Harris, V. T. (1953) Ecological relationships of meadow voles and rice rats in tidal marshes. J. Mammal. 34: 479-487.

Innes, D. G. (1978) A reexamination of litter sizes in some North American microtines. Can. J. Zool. 56: 1488-1496.

Innes, D. G.; Millar, J. S. (1979) Growth of *Clethrionomys gapperi* and *Microtus pennsylvanicus* in captivity. Growth 43: 208-217.

Innes, D. G.; Millar, J. S. (1981) Body weight, litter size, and energetics of reproduction in *Clethrionomys gapperi* and *Microtus pennsylvanicus*. Can. J. Zool. 59: 785-789.

Iverson, S. L.; Turner, B. N. (1974) Winter weight dynamics in *Microtus pennsylvanicus*. Ecology 55: 1030-1041.

Iverson, S. L.; Turner, B. N. (1976) Small mammal radioecology: natural reproductive patterns of seven species. Pinawa, Manitoba: Whiteshell Nuclear Research Establishment; AECL-5393; 53 pp.

Johnson, M. L.; Johnson, S. (1982) Voles (*Microtus* species). In: Chapman, J. A.; Feldhamer, G. A., eds. Wild mammals of North America; pp. 326-353.

Keller, B. L. (1985) Reproductive patterns. In: Tamarin, R. H., ed. Biology of new world *Microtus*. Spec. Publ. Amer. Soc. Mammal. 8; pp. 812-844.

Keller, B. L.; Krebs, C. J. (1970) *Microtus* population biology. III. Reproductive changes in fluctuating populations of *M. ochrogaster* and *M. pennsylvanicus* in southern Indiana, 1965-1967. Ecol. Monogr. 40: 263-294.

Kendall, W. A.; Sherwood, R. T. (1975) Palatability of leaves of tall fescue and reed canary-grass and some of their alkaloids to meadow voles. Agron. J. 67: 667-671.

Kenney, A. M.; Evans, R. L.; Dewsbury, D. A. (1977) Postimplantation pregnancy disruption in *Microtus orchogaster*, *Microtus pennsylvanicus*, and *Peromyscus maniculatis*. J. Reprod. Fert. 49: 365-367.

Kott, E.; Robinson, W. L. (1963) Seasonal variation in litter size of the meadow vole in southern Ontario. J. Mammal. 44: 467-470.

Krebs, C. J. (1977) Competition between *Microtus pennsylvanicus* and *Microtus ochragaster*. Am. Midl. Nat. 97: 42-49.

Krebs, C. J.; Myers, J. H. (1974) Population cycles in small mammals. Adv. Ecol. Res. 8: 267-399.

Lee, C.; Horvath, D. J. (1969) Management of the meadow vole (*Microtus pennsylvanicus*). Lab. Anim. Care 19: 88-91.

Lindroth, R. L.; Batzli, G. O. (1984) Food habits of the meadow vole (*Microtus pennsylvanicus*) in bluegrass and prairie habitats. J. Mammal. 65: 600-606.

Lomolino, M. V. (1984) Immigrant selection, predation, and the distribution of *Microtus pennsylvanicus* and *Blarina brevicauda* on islands. Am. Nat. 123: 468-483.

Madison, D. M. (1978) Movement indicators of reproductive events among female meadow voles as revealed by radio-telemetry. J. Mammal. 59: 835-843.

Madison, D. M. (1980) Space use and social structure in meadow voles, *Microtus pennsylvanicus*. Behav. Ecol. Sociobiol. 7: 65-71.

McShea, W. J. (1989) Reproductive synchrony and home range size in a territorial microtine. Oikos 56: 182-186.

McShea, W. J.; Madison, D. M. (1989) Measurements of reproductive traints (litter size, pup growth, and birth interval) in a field population of meadow voles. J. Mammal. 70: 132-141.

Mihok, S. (1984) Life history profiles of boreal meadow voles (*Microtus pennsylvanicus*). Carnegie Mus. Nat. Hist. Spec. Publ. No. 10; pp. 91-102.

Mihok, S.; Brian, T. N.; Iverson, S. L. (1985) The characterization of vole population dynamics. Ecol. Monogr. 55: 399-420.

Millar, J. S. (1987) Energy reserves in breeding small rodents. Symp. Zool. Soc. Lond. 57: 231-240.

Morrison, P.; Dieterich, R.; Preston, D. (1977) Body growth in sixteen rodent species and subspecies maintained in laboratory colonies. Physiol. Zool. 50: 294-310.

Morrison, P. R. (1948) Oxygen consumption in several small wild mammals. J. Cell. Comp. Physiol. 31: 69-96.

Myers, J. H.; Krebs, C. J. (1971) Genetic, behavioral, and reproductive attributes of dispersing field voles *Microtus pennsylvanicus* and *Michrotus ochrogaster*. Ecol. Monogr. 41: 53-78.

Nadeau, J. H. (1985) Ontogeny. In: Tamarin, R. H., ed. Biology of new world *Microtus*. Spec. Publ. Amer. Soc. Mammal. 8; pp. 254-285.

Nagy, K. A. (1987) Field metabolic rate and food requirement scaling in mammals and birds. Ecol. Monogr. 57: 111-128.

Ognev, S. I. (1950) Mammals of the U.S.S.R. and adjacent countries. Translated from Russian by: Israel Program for Scientific Translations (1964), Jerusalem; 626 pp.

Ostfeld, R. S.; Pugh, S. R.; Seamon, J. O.; et al. (1988) Space use and reproductive success in a population of meadow voles. J. Anim. Ecol. 57: 385-394.

Ouellette, D. E.; Heisinger, J. F. (1980) Reingestion of feces by *Microtus pennsylvanicus*. J. Mammal. 61: 366-368.

Pearson, O. P. (1947) The rate of metabolism of some small mammals. Ecology 29: 127-145.

Reich, L. M. (1981) *Microtus pennsylvanicus*. Mammalian species. The American Society of Mammalogists; Species No. 159; 8 pp.

Riewe, R. R. (1973) Food habits of insular meadow voles, *Microtus pennsylvanicus terraenovae* (*Rodentia: Cricetidae*), in Notre Dame Bay, Newfoundland. Can. Field-Nat. 87: 5-13.

Schillinger, J. A., Jr.; Elliott, F. C. (1966) Bioassays for nutritive value of individual alfalfa plants. Q. Bull. Michigan Agric. Exp. Sta. 48: 580-590.

Schwartz, B.; Mihok, S. (1983) Body composition of meadow voles contrasted during annual and multiannual population fluctuations (abstract). Bull. Ecol. Soc. Am. 64: 102.

Stahl, W. R. (1967) Scaling of respiratory variables in mammals. J. Appl. Physiol. 22: 453-460.

Taitt, M. J.; Krebs, C. J. (1985) Population dynamics and cycles. In: Tamarin, R. H., ed. Biology of new world *Microtus*. Spec. Publ. Amer. Soc. Mammal. 8; pp. 567-620.

Tamarin, R. H. (1977a) Dispersal in island and mainland voles. Ecology 58: 1044-1054.

Tamarin, R. H. (1977b) Demography of the beach vole (*Microtus breweri*) and the meadow vole (*M. pennsylvanicus*) in southern Massachusetts. Ecology 58: 1310-1321.

Tamarin, R. H. (1984) Body mass as a criterion of dispersal in voles: a critique. J. Mammal. 65: 691-692.

Tamarin, R. H., ed. (1985) Biology of new world *Microtus*. Spec. Publ. Amer. Soc. Mammal. 8.

Townsend, M. T. (1935) Studies on some of the small animals of central New York. Roosevelt Wildl. Ann. 4: 1-20.

Van Vleck, D. B. (1969) Standardization of *Microtus* home range calculation. J. Mammal. 50: 69-30.

Wiegert, R. (1961) Respiratory energy loss and activity patterns in the meadow vole, *Microtus pennsylvanicus pennsylvanicus*. Ecology 42: 245-253.

Wolff, J. O. (1985) Behavior. In: Tamarin, R. H., ed. Biology of New World *Microtus*. Spec. Publ. Am. Soc. Mammal. 8; pp. 340-372.

Wunder, B. A. (1985) Energetics and thermoregulation. In: Tamarin, R. H., ed. Biology of new world *Microtus*. Spec. Publ. Amer. Soc. Mammal. 8; pp. 812-844.

Zimmerman, E. G. (1965) A comparison of habitat and food of two species of *Microtus*. J. Mammal. 46: 605-612.

2.2.10. Muskrat (water rats and muskrats)

Order *Rodentia* Family *Muridae*. Water rats and muskrats are the most aquatic of this family of rodents, with most of their lives spent in or near bogs, marshes, lakes or streams. These two rodents feed mostly on aquatic vegetation. Only one species exists in each genus (Burt and Grossenheider, 1980).

Selected species

The muskrat (*Ondatra zibethicus*) is indigenous and common throughout most of the United States (except in the extreme southeast, central Texas, and most of California) and Canada (except in the extreme north) (Burt and Grossenheider, 1980). Muskrats feed primarily on aquatic plants. They are prey for hawks, minks, otters, raccoons, owls, red fox, dogs, snapping turtles, and water snakes (Bednarik, 1956; Errington, 1939a; Wilson, 1985), and are more vulnerable to predation during times of drought when low water levels leave their dens or lodges more exposed (Errington, 1939a). Many vertebrates use muskrat homes for shelter or to find food (Kiviat, 1978). The muskrat is one of the most valuable fur animals in North America (Dozier, 1953; Perry, 1982). Including the Newfoundland muskrat, formerly *Ondatra obscurus*, 16 recognized subspecies of *O. zibethicus* exist in North America (Perry, 1982). Of these, *O. z. zibethicus* (eastern United States, southeastern Canada), *O. z. osoyoosensis* (Rocky Mountains, southwestern Canada), and *O. z. rivalicius* (southern Louisiana, coasts of Mississippi, western Alabama, and eastern Texas) are most often studied.

Body size. The muskrat measures 25 to 36 cm (head and body) with a 20- to 25- cm tail (Burt and Grossenheider, 1980), and adult weights can range from 0.5 kg to over 2 kg (see Appendix). Willner et al. (1980) reported no sexual dimorphism, whereas Dozier (1950), Parker and Maxwell (1984), and others (see Appendix) reported that males are slightly heavier than females. Muskrats tend to be larger and heavier in northern latitudes (Perry, 1982), although the smallest muskrats are found in Idaho (Reeves and Williams, 1956). Fat levels in adult males increase from spring through fall, and subsequently decrease from winter to spring (Schacher and Pelton, 1975). In nonpregnant females, fat levels decrease from winter through summer; in pregnant females, body fat increases from spring to summer (Schacher and Pelton, 1975).

Habitat. Muskrats inhabit saltwater and brackish marshes and freshwater creeks, streams, lakes, marshes, and ponds (Dozier, 1953; Johnson, 1925; Kiviat, 1978; O'Neil, 1949). Muskrats that live along the banks or shores of waterways generally excavate dens in the banks, whereas muskrats living in ponds with ample plant material construct lodges (Johnson, 1925; Perry, 1982). When available, bank dens seem preferred over constructed lodges (Johnson, 1925).

Food habits. Muskrats are primarily herbivorous, but some populations are more omnivorous (Dozier, 1953; Errington, 1939b). Muskrats usually feed at night, diving to gnaw on aquatic vegetation growing near their houses (Dozier, 1953; Johnson, 1925; Perry, 1982). The roots and basal portions of aquatic plants make up most of the muskrat's diet, although shoots, bulbs, tubers, stems, and leaves also are eaten (Dozier,

1950, 1953; Willner et al., 1980; Svihla and Svihla, 1931). Marsh grasses and sedges (Svihla and Svihla, 1931) and cattails (Johnson, 1925; Willner et al., 1975) seem to be important muskrat foods; in Maryland, green algae is also important (Willner et al., 1975). Although muskrats forage near their dens or lodges, they show preferences for some plant species (e.g., cattails, bulrushes) over others (Bellrose, 1950). Muskrats are a major consumer of marsh grasses (Kiviat, 1978). They also dig for food on lake and pond bottoms (Bailey, 1937; Dozier, 1953; Hanson et al., 1989). Among the animals that muskrats consume are crayfish, fish, frogs, turtles, and young birds (Errington, 1939b; Johnson, 1925; Willner et al., 1980). Molluscs are an important component of the diet of some populations (Convey et al., 1989; Neves and Odom, 1989; Parmalee, 1989; Willner et al., 1980). Young muskrats feed more on bank vegetation than do adults (Warwick, 1940, cited in Perry, 1982).

Temperature regulation and molt. Active year-round (Kiviat, 1978), muskrats usually begin their annual molt in the summer, with fur reaching its minimum density during August (Willner et al., 1980). Muskrats use their dens or lodges to insulate themselves from summer heat and winter cold (O'Neil, 1949; Willner et al., 1980). During extreme cold, muskrats may freeze to death if they are unable to plug their den entrances (Errington, 1939a).

Breeding activities and social organization. Muskrats are solitary or form breeding pairs that remain in a home range exclusive of other pairs (Errington, 1963; Proulx and Gilbert, 1983). They are territorial, particularly during peak reproductive activity, with their houses usually spaced at least 8 m apart (Johnson, 1925; Sather, 1958; Trippensee, 1953). In southern parts of their range, muskrats breed throughout the year, with late fall and early spring peaks (O'Neil, 1949; Svihla and Svihla, 1931; Wilson, 1955). In northern latitudes, breeding occurs only in the spring and summer, with first litters born in late April or early May (Mathiak, 1966; Beer, 1950; Errington, 1937b; Gashwiler, 1950). Errington (1937b) found that postpartum estrus occurs in the muskrat, and suggested that the period between litters is about 30 d. Neonates are almost hairless but by age 2 wk are covered with fur and able to swim (Errington, 1963).

Home range and resources. Muskrats have relatively small home ranges that vary in configuration depending on the aquatic habitat (Perry, 1982; Willner et al., 1980). They build two different types of houses: a main dwelling and a feeding house (feeder) that is smaller than the main house (Dozier, 1953; Johnson, 1925; Sather, 1958). The feeder provides protection from the elements and predators when feeding in prime foraging areas, as well as access to oxygen during frozen conditions. The house provides a dry nest and stable temperatures. Muskrats usually forage within 5 to 10 m of a house (Willner et al., 1980). Using radiotelemetry, MacArthur (1978) found muskrats within 15 m of their primary dwelling 50 percent of the time and only rarely more than 150 m. Mathiak (1966) reported other experiments showing that muskrats remain close to their dwellings.

In the winter, muskrats build pushups, which are cavities formed in 30 to 46 cm high piles of vegetation pushed up through holes in the ice of a marsh (Perry, 1982). Muskrats use pushups as resting places during frozen conditions to minimize their exposure to cold water (Fuller, 1951). In the summer, muskrats often change the use of their home range in response to water levels; during droughts they will move if the area

around the house dries up, which can lead to intense aggression in the more favorable habitat (Errington, 1939a). Usually only a minor proportion of drought-evicted muskrats can find new homes (Errington, 1939a). In the winter, droughts can result in severe mortality (Errington, 1937a).

Population density. Bellrose and Brown (1941, cited in Perry, 1982) concluded that cattail communities support more muskrat houses than other plant types in the Illinois River valley. Cattail communities also support high densities of muskrats in other areas (Errington, 1963; Dozier, 1950). In pond and lake habitats, shoreline length is a more important factor than overall habitat area in determining muskrat density (Glass, 1952, cited in Perry, 1982). Many investigators estimate muskrat densities by counting the number of houses or push-ups and multiplying by a factor ranging from 2.8 (Lay, 1945, cited in Boutin and Birkenholz, 1987) to 5.0 (Dozier et al., 1948), although this method is questionable (Boutin and Birkenholz, 1987).

Population dynamics. The age at first breeding varies but usually occurs during the first spring after birth (Errington, 1963; Perry, 1982). Southern populations produce more litters but with fewer pups in each than do northern populations (Boyce, 1977; Perry, 1982; see table). Muskrats in lower quality habitats have both smaller litter sizes and fewer litters than muskrats in better quality areas (Neal, 1968). They disperse in the spring to establish breeding territories or to move into uninhabited areas (Errington, 1963). Muskrat population cycles of 5, 6, and 10 y have been reported (Butler, 1962; Willner et al., 1980); Perry (1982) summarized several studies that reported cycles ranging from 10 to 14 yr or more. Butler (1962) found that muskrats follow a 10-yr cycle in most parts of Canada.

Similar species (from general references)

- The Florida water rat (*Neofiber alleni*) is much smaller (20 to 22 cm) than the muskrat, with a rounded tail (11 to 17 cm) to distinguish it further. The Florida water rat inhabits bogs, marshes, weedy lake borders, and savanna streams, though its range is limited to Florida. It feeds on aquatic plants and crayfish.

General references

Boutin and Birkenholz (1987); Burt and Grossenheider (1980); Perry (1982); Willner et al. (1980).

Muskrat (*Ondatra zibethicus*)

Factors	Age/Sex/ Cond./Seas.	Mean	Range or (95% CI of mean)	Location	Reference	Note No.
Body Weight (g)	B M winter	1,480	1,400 - 1,520	New York	Dozier, 1950	
	B F winter	1,350	1,300 - 1,400			
	B M winter	1,326 ± 45.9 SE		e Tennessee	Schacher & Pelton, 1978	
	B F winter	1,221 ± 54.2 SE				
	B M winter	1,180	730 - 1,550	Nebraska, nc Kansas	Sather, 1958	
	B F winter	1,090	770 - 1,450			
	A M spring	909		Idaho	Reeves & Williams, 1956	
	A F spring	837				
	neonate	21.3	16 - 28	Iowa	Errington, 1939b	
	neonate		20 - 25	New York	Dean, 1957	
	at weaning	200	112 - 184	Iowa	Errington, 1939b	
	at weaning			New Brunswick, Canada	Parker & Maxwell, 1984	
Pup Growth Rate (g/d)	0 to 30 d	5.4	4.3 - 5.6	Iowa/marsh	Errington, 1939b	
	weaning to 1st fall; M	7.5		New Brunswick, Canada/ marsh	Parker & Maxwell, 1980	
	F	7.1				
Metabolic Rate (lO_2/kg-d)	floating	21 ± 7.9 SE		lab (water temperature 25°C)	Fish, 1982	
	swimming	38				
Metabolic Rate (kcal/kg-d)	floating	101		lab (water temperature 25°C)	Fish, 1982	
	swimming	182				
	A M basal	71.6			estimated	1
	A F basal					
	A M free-living	213	(90 - 505)		estimated	2
	A F free-living	216	(91 - 513)			

Muskrat (*Ondatra zibethicus*)

Factors	Age/Sex/ Cond./Seas.	Mean	Range or (95% CI of mean)	Location	Reference	Note No.
Food Ingestion Rate (g/g-d)	greens greens & corn	0.34 0.26		Louisiana, captive (*rivalicius*)	Svihla & Svihla, 1931	3
Water Ingestion Rate (g/g-d)	A M A F	0.97 0.98			estimated	4
Inhalation Rate (m^3/d)	A M A F	0.61 0.57			estimated	5
Surface Area (cm^2)	A M A F	1,221 1,159			estimated	6

Dietary Composition				Winter		Reference	Note No.
cattail bulrush burreed waterstarwort pondweed arrowhead corn				25 - 50 10 - 25 5 - 10 2 - 5 2 - 5 2 - 5 2 - 5	ne United States/NS (rough approximation of % diet; stomach contents)	Martin et al., 1951	
cattail rush millet algae grass cord grass seeds other		59 17 8 5 4 4 2 3			Somerset Co., MD/brackish marsh (% of diet; stomach contents)	Willner et al., 1975	

Muskrat (*Ondatra zibethicus*)

Dietary Composition	Spring	Summer	Fall	Winter	Location/Habitat (measure)	Reference	Note No.
green algae		77			Montgomery Co., MD/ freshwater	Willner et al., 1975	
3-square rush		8					
switch grass		8					
soft rush		4			(% of diet; stomach contents)		
water willow		2					
grass (*Graminae*)		1					
other		<1					

Population Dynamics			Range		Reference	Note No.
Home Range Size (ha)	summer	0.17 ± 0.0078 SD		Ontario, Canada/marsh	Proulx & Gilbert, 1983	
	early summer	0.048 ± 0.024 SD		Ontario, Canada/bay	Proulx & Gilbert, 1983	
	late summer	0.11 ± 0.084 SD				
	B M	0.17		Iowa/marsh	Neal, 1968	
	B F	0.17				
Population Density	A B spring	9.3 ± 1.3 SE/ha		ne Iowa/open water riverine	Clay & Clark, 1985	
	A B summer	2.6 ± 0.3 SE/ha				
	A B fall	6.3 ± 1.1 SE/ha				
	B M	18.7/ha		Virginia/fringe marsh	Halbrook, 1990	
	B M	2.1/ha		Virginia/marsh		
	B B	28.3/ha	1 - 74	Louisiana/*Scirpus olneyi* marsh	O'Neil, 1949	
	B B summer	23/km river		Pennsylvania/riverine (little vegetation)	Brooks & Dodge, 1986	
	B B summer	48/km river		Massachusetts/wetland, river (sedges)	Brooks & Dodge, 1986	
Litter Size		3.46		Louisiana/marsh	O'Neil, 1949	
		4.65	3 - 6	Virginia/marsh	Halbrook, 1990	
		7.1 ± 0.2 SE		Iowa/riverine	Clay & Clark, 1985	
		7.3	1 - 12	Wisconsin/marsh	Mathiak, 1966	

Muskrat (*Ondatra zibethicus*)

Population Dynamics	Age/Sex/ Cond./Seas.	Mean	Range	Location/Habitat	Reference	Note No.
Litters/Year		1.7 2.1 5 - 6	 < 7 - 8	Idaho/marsh Maine/wildlife refuge - NS Louisiana/NS	Reeves & Williams, 1956 Gashwiler, 1950 O'Neil, 1949	
Days Gestation		29 - 30	> 22 - 23	nw Iowa/marsh Maine/wildlife refuge - NS	Errington, 1937b Gashwiler, 1950	
Age at Weaning	B	28 d	21 - 30 d	Iowa/marsh	Errington, 1939b	
Age at Sexual Maturity		6 mo		Louisiana/marsh	Svihla & Svihla, 1931	
Annual Mortality Rates (%)	adult juvenile juvenile	87 90 67		ne Iowa/riverine Missouri/NS	Clay & Clark, 1985 Schwartz & Schwartz, 1959	 7
Longevity			< 5 yr	Ontario, Canada/marsh	Proulx & Gilbert, 1983	
Seasonal Activity	Begin	Peak	End		Reference	Note No.
Mating	year-round	winter spring-summer		southern latitudes northern latitudes	O'Neil, 1949; Svihla & Svihla, 1931 Chamberlain, 1951; Gashwiler, 1950; Reeves & Williams, 1956	
Parturition	late April early May late May	June early July	late August late August mid-August	Iowa Maine Idaho	Errington, 1937b Gashwiler, 1950 Reeves & Williams, 1956	
Dispersal		fall spring		Ontario, Canada Iowa	McDonnell & Gilbert, 1981 Errington, 1963	

Muskrat (*Ondatra zibethicus*)

1 Estimated using equation 3-43 (Boddington, 1978) and body weights from Sather (1958).
2 Estimated using equation 3-46 (Nagy, 1987) and body weights from Sather (1958).
3 Based on wet weight of food; greens included *Panicum hemitomum*, *P. virgatum*, and *Spartina patens*.
4 Estimated using equation 3-17 (Calder and Braun, 1983) and body weights from Sather (1958).
5 Estimated using equation 3-20 (Stahl, 1967) and body weights from Sather (1958).
6 Estimated using equation 3-22 (Stahl, 1967) and body weights from Sather (1958).
7 Cited in Perry (1982.)

References (including Appendix)

Arthur, S. C. (1931) The fur animals of Louisiana. Louis. Dept. Conserv. Bull. 18 (revised).

Asdell, S. A. (1964) Patterns of mammalian reproduction. Compstock Publishing Co.

Bailey, V. (1937) The Maryland muskrat marshes. J. Mammal. 18: 350-354.

Bednarik, K. (1956) The muskrat in Ohio Lake Erie marshes. Columbus, OH: Ohio Division of Wildlife Department of Natural Resources; 67 pp.

Beer, J. R. (1950) The reproductive cycle of the muskrat in Wisconsin. J. Wildl. Manage. 14: 151-156.

Bellrose, F. C. (1950) The relationship of muskrat populations to various marsh and aquatic plants. J. Wildl. Manage. 14: 299-315.

Bellrose, F. C.; Brown, L. G. (1941) The effect of fluctuating water levels on the muskrat population of the Illinois River valley. J. Wildl. Manage. 5: 206-212.

Beshears, W. W., Jr. (1951) Muskrats in relation to farm ponds. Proc. Annu. Conf. Southeast. Assoc. Game and Fish Comm. 5: 1-8.

Beshears, W. W.; Haugen, A. O. (1953) Muskrats in farm ponds. J. Wildl. Manage. 17: 540-456.

Boddington, M. J. (1978) An absolute metabolic scope for activity. J. Theor. Biol. 75: 443-449.

Boutin, S.; Birkenholz, D. E. (1987) Muskrat and round-tailed muskrat. In: Novak, M.; Baker, J. A.; Obbarel, M. E.; et al., eds. Wild furbearer management and conservation; pp. 316-324.

Boyce, M. S. (1977) Life histories in variable environments: applications to geographic variation in the muskrat (*Ondatra zibethicus*) [Ph.D. dissertation]. New Haven, CT: Yale University.

Brooks, R. P.; Dodge, W. E. (1986) Estimation of habitat quality and summer population density for muskrats on a watershed basis. J. Wildl. Manage. 50: 269-273.

Burt, W. H.; Grossenheider, R. P. (1980) A field guide to the mammals of North America north of Mexico. Boston, MA: Houghton Mifflin Co.

Butler, L. (1940) A quantitative study of muskrat food. Can. Field-Nat. 54: 37-40.

Butler, L. (1962) Periodicities in the annual muskrat population figures for the province of Saskatchewan. Can. J. Zool. 40: 1277-1286.

Calder, W. A.; Braun, E. J. (1983) Scaling of osmotic regulation in mammals and birds. Am. J. Physiol. 244: R601-R606.

Chamberlain, J. L. (1951) The life history and management of the muskrat on Great Meadows Refuge [master's thesis]. Amherst, MA: University of Massachusetts.

Clay, R. T.; Clark, W. R. (1985) Demography of muskrats in the upper Mississippi River. J. Wildl. Manage. 49: 883-890.

Convey, L. E.; Hanson, J. M.; MacKay, W. C. (1989) Size-selective predation on unionid clams by muskrats. J. Wildl. Manage. 53: 654-657.

Dean, F. C. (1957) Age criteria and kit growth of central New York muskrats [Ph.D. dissertation]. NY: State University of New York, College of Forestry.

Dibblee, R. L. (1971) Reproduction, productivity and food habits of muskrats on Prince Edward Island [master's thesis]. Wolfville, Nova Scotia, Canada: Acadia University.

Dilworth, T. G. (1966) The life history and ecology of the muskrat, *Ondatra zibethicus zibethicus*, under severe water level fluctuations [master's thesis]. Fredericton, New Brunswick, Canada: University of New Brunswick.

Donohoe, R. W. (1961) Muskrat production in areas of controlled and uncontrolled water-level units [Ph.D. dissertation]. Columbus, OH: Ohio State University.

Dorney, R. S.; Rusch, A. J. (1953) Muskrat growth and litter production. Wisc. Conserv. Dept. Tech. Wildl. Bull. 8; 32 pp.

Dozier, H. L. (1948) Estimating muskrat populations by house counts. Trans. North Amer. Wildl. Conf. 13: 372-392.

Dozier, H. L. (1950) Muskrat trapping on the Montezuma National Wildlife Refuge, New York, 1943-1948. J. Wildl. Manage. 14: 403-412.

Dozier, H. L. (1953) Muskrat production and management. U.S. Fish Wildl. Serv. Circ. 18; 42 pp.

Dozier, H. L.; Markley, M. H.; Llewellyn, L. M. (1948) Muskrat investigations on the Blackwater National Wildife Refuge, Maryland, 1941-1945. J. Wildl. Manage. 12: 177-190.

Erickson, H. R. (1963) Reproduction, growth, and movement of muskrats inhabiting small water areas in New York state. N.Y. Fish Game J. 10: 90-117.

Errington, P. L. (1937a) Habitat requirements of stream-dwelling muskrats. Trans. North Amer. Wildl. Conf. 2: 411-416.

Errington, P. L. (1937b) The breeding season of the muskrat in northwest Iowa. J. Mammal. 18: 333-337.

Errington, P. L. (1939a) Reactions of muskrat populations to drought. Ecology 20: 168-186.

Errington, P. L. (1939b) Observations on young muskrats in Iowa. J. Mammal. 20: 465-478.

Errington, P. L. (1948) Environmental control for increasing muskrat production. Trans. North Amer. Wildl. Nat. Resour. Conf. 13: 596-609.

Errington, P. L. (1963) Muskrat populations. Ames, IA: Iowa State University Press.

Fish, F. E. (1982) Aerobic energetics of surface swimming in the muskrat *Ondatra zibethicus*. Physiol. Zool. 55: 180-189.

Fish, F. E. (1983) Metabolic effects of swimming velocity and water temperature in the muskrat (*Ondatra zibethicus*). Comp. Biochem. Physiol. A Comp. Physiol. 75: 397-400.

Fuller, W. A. (1951) Measurements and weights of northern muskrats. J. Mammal. 32: 360-362.

Gashwiler, J. S. (1948) Maine muskrat investigations. Maine Dept. Inland Fish. Game Bull.; 38 pp.

Gashwiler, J. S. (1950) A study of the reproductive capacity of Maine muskrats. J. Mammal. 31: 180-185.

Glass, B. P. (1952) Factors affecting the survival of the plains muskrat *Ondatra zibethica cinnamomina* in Oklahoma. J. Wildl. Manage. 16: 484-491.

Godin, A. J. (1977) Wild mammals of New England. Baltimore, MD: Johns Hopkins University Press; 304 pp.

Halbrook, R. S. (1990) Muskrat populations in Virginia's Elizabeth River: Influence of environmental contaminants [Ph.D. dissertation]. Blacksburg, VA: Virginia Polytechnic Institute and State University.

Hall, E. R. (1981) The mammals of North America. 2nd ed. New York, NY: John Wiley and Sons; 181 pp.

Hanson, J. M.; Mackay, W. C.; Prepas, E. E. (1989) Effect of size-selective predation by muskrats *(Ondatra zibethicus)* on a population of unionid clams *(Anodonta grandis simpsoniana)*. J. Anim. Ecol. 58: 15-28.

Harris, V. T. (1952) Muskrats on tidal marshes of Dorchester County. Maryland Board Nat. Resour., Chesapeake Bio. Lab., Dept. Res. Education Publ. 91; 36 pp.

Johnson, C. E. (1925) The muskrat in New York: its natural history and economics. Roosevelt Wildl. Bull. 3: 205-321.

Kiviat, E. (1978) The muskrat's role in the marsh ecosystem: a qualitative synthesis (abstract). Bull. Ecol. Soc. Am. 59: 124.

Lay, D. W. (1945) Muskrat investigations in Texas. J. Wildl. Manage. 9: 56-76.

MacArthur, R. A. (1978) Winter movements and home range of the muskrat. Can. Field-Nat. 92: 345-349.

MacArthur, R. A.; Krause, R. E. (1989) Energy requirements of freely diving muskrats *(Ondatra zibethicus)*. Can. J. Zool. 67: 2194-2200.

Martin, A. C.; Zim, H. S.; Nelson, A. L. (1951) American wildlife and plants. New York: McGraw-Hill.

Mathiak, H. A. (1966) Muskrat population studies at Horicon Marsh. Tech. Bull. Wisconsin Conserv. Dept. 36: 1-56.

McDonnell, J. A.; Gilbert, F. F. (1981) The responses of muskrats (*Ondatra zibethicus*) to water level fluctuations at Luther Marsh, Ontario. In: Chapman, J. A.; Pursley, D., eds. Proceedings worldwide furbearer conference: v. 1. August 1980; Frostburg, MD; pp. 1027-1040.

McLeod, J. A.; Bondar, G. F. (1952) Studies on the biology of the muskrat in Manitoba. Part I. Oestrus cycle and breeding season. Can. J. Zool. 30: 243-253.

Nagy, K. A. (1987) Field metabolic rate and food requirement scaling in mammals and birds. Ecol. Monogr. 57: 111-128.

Neal, T. J. (1968) A comparison of two muskrat populations. Iowa State J. Sci. 43: 193-210.

Neves, R. J.; Odom, M. C. (1989) Muskrat predation on endangered freshwater mussels in Virginia. J. Wildl. Manage. 53: 934-941.

O'Neil, T. (1949) The muskrat in the Louisiana coastal marshes (A study of the ecological, geological, biological, tidal, and climatic factors governing the production and management of the muskrat industry in Louisiana). New Orleans, LA: Louis. Dept Wildl. Fish., Fed. Aid Sect. Fish and Game Div.; 152 pp.

O'Neil, T.; Linscombe, G. (1976) The fur animals, the alligator, and the fur industry in Louisiana. New Orleans, LA: Louisiana Wildl. and Fish. Comm. Wildl. Education Bull. 106; 66 pp.

Olsen, P. F. (1959) Muskrat breeding biology at Delta, Manitoba. J. Wildl. Manage. 23: 40-53.

Parker, G. R.; Maxwell, J. W. (1980) Characteristics of a population of muskrats *(Ondatra zibethicus zibethicus)* in New Brunswick. Can. Field-Nat. 94: 1-8.

Parker, G. R.; Maxwell, J. W. (1984) An evaluation of spring and autumn trapping seasons for muskrats, *Ondatra zibethicus*, in eastern Canada. Can. Field-Nat. 98: 293-304.

Parmalee, P. W. (1989) Muskrat predation on softshell turtles. J. Tenn. Acad. Sci. 64: 225-227.

Perry, H. R., Jr. (1982) Muskrats. In: Chapman, J. A.; Feldhamer, G. A., eds. Wild mammals of North America: biology, management and economics. Baltimore, MD: Johns Hopkins University Press; pp. 282-325.

Proulx, G.; Gilbert, F. F. (1983) The ecology of the muskrat *Ondatra zibethicus* at Luther Marsh, Ontario. Can. Field-Nat. 97: 377-390.

Reeves, H. M.; Williams, R. M. (1956) Reproduction, size, and mortality in Rocky Mountain muskrat. J. Mammal. 37: 494-500.

Sather, J. H. (1958) Biology of the Great Plains muskrat in Nebraska. Wildl. Monogr. 2. 35 pp.

Schacher, W. H.; Pelton, M. R. (1975) Productivity of muskrats in east Tennessee. Proc. Annu. Conf. Southeast. Assoc. Game and Fish Comm. 29: 594-608.

Schacher, W. H.; Pelton, M. R. (1978) Sex ratios, morphology and condition parameters of muskrats in east Tennessee. Proc. Annu. Conf. Southeast. Assoc. Fish and Wildl. Agencies 30: 660-666.

Schwartz, C. W.; Schwartz, E. R. (1959) The wild mammals of Missouri. Columbia, MO: University of Missouri Press and Missouri Conservation Commission.

Seamans, R. (1941) Lake Champlain fur survey. Vermont Fish Game Bull. 3-4.

Smith, F. R. (1938) Muskrat investigations in Dorchester County, Maryland, 1930-34. U.S. Dept. Agr. Circ. 474; 24 pp.

Smith, H. R.; Jordan, P. A. (1976) An exploited population of muskrats with unusual biomass, productivity, and body size. Conn. Dept. Environ. Prot. Rep. Invest. No. 7; 16 pp.

Smith, H. R.; Sloan, R. J.; Walton, G. S. (1981) Some management implications between harvest rate and population resiliency of the muskrat (*Ondatra zibethicus*). In: Chapman, J. A.; Pursley, D., eds. Proceedings worldwide furbearer conference: v. 1. August 1980; Frostburg, MD; pp. 425-442.

Stahl, W. R. (1967) Scaling of respiratory variables in mammals. J. Appl. Physiol. 22: 453-460.

Stevens, W. E. (1953) The northwestern muskrat of the Mackenzie Delta, Northwest Territories, 1947-48. Can. Wildl. Serv., Wildl. Manage. Bull., Ser. 8; 55 pp.

Stewart, R. W.; Bider, J. R. (1974) Reproduction and survival of ditch-dwelling muskrats in southern Quebec. Can. Field-Nat. 88: 420-436.

Svihla, A. (1931) The field biologist's report. In: Arthur, S. C., compil. The fur animals of Louisiana. New Orleans, LA: Louisiana Dept. Conserv., Bull. 18 (rev.); 439 pp.

Svihla, A.; Svihla, R. D. (1931) The Louisiana muskrat. J. Mammal. 12: 12-28.

Trippensee, R. E. (1953) Muskrats. In: Wildlife management: fur bearers, waterfowl, and fish: v. 2. New York, NY: McGraw-Hill; pp. 126-139.

Walker, E. P.; et al. (1975) In: Paradiso, J. L., ed. Mammals of the world: v. 2. 3rd ed. Baltimore, MD: Johns Hopkins University Press; pp. 645-1500.

Warwick, T. (1940) A contribution to the ecology of the muskrat (*Ondatra zibethica*) in the British Isles. Proc. Zool. Soc. London, Ser. A 110: 165-201.

Willner, G. R.; Chapman, J. A.; Goldsberry, J. R. (1975) A study and review of muskrat food habits with special reference to Maryland. Maryland Wildl. Adm. Publ. Wildl. Ecol. 1; 25 pp.

Willner, G. R.; Feldhamer, G. A.; Zucker, E. E.; et al. (1980) *Ondatra zibethicus*. Mammalian species. No. 141. Amer. Soc. Mammal.; 8 pp.

Wilson, K. A. (1954) Litter production of coastal North Carolina muskrats. Proc. Annu. Conf. Southeast. Assoc. Game and Fish Comm. 8: 13-19.

Wilson, K. A. (1955) A compendium of the principal data on muskrat reproduction. Raleigh, NC: North Carolina Wildl. Resour. Comm., Game Div.; Fed. Aid Wildl. Restoration Proj. W-6-R.

Wilson, K. A. (1956) Color, sex ratios, and weights of North Carolina muskrats. Raleigh, NC: North Carolina Wildl. Resour. Comm.; Fed. Aid in Wildl. Restoration Proj. W-6-R-15; 20 pp.

Wilson, K. A. (1985) The role of mink and otter as muskrat predators in northeastern North Carolina. Proc. Annu. Conf. Southeast. Assoc. Fish and Wildl. Agencies 18: 199-207.

2.2.11. Eastern Cottontail (rabbits)

Order *Lagomorpha* Family *Leporidae*. Rabbits and hares are medium-sized grazing herbivores found throughout North America. Most species are nocturnal and crepuscular. Many are social, travelling in small groups. Rabbits are prey for large carnivorous birds and mammals. Most species also are important game animals.

Selected species

The eastern cottontail (*Sylvilagus floridanus*) is the most widely distributed of the medium-sized rabbits (Chapman et al., 1982). It is found over most of the eastern half of the United States and southern Canada and has been widely introduced into the western United States (Chapman et al., 1980). North of Mexico, 14 subspecies are recognized (Chapman et al., 1982). The eastern cottontail feeds on green vegetation in summer and bark and twigs in winter. The cottontail is active from early evening to late morning and is preyed on by owls, hawks, and carnivorous mammals (Palmer and Fowler, 1975; Burt and Grossenheider, 1980).

Body size. The eastern cottontail measures 35 to 43 cm in length and weighs 0.7 to 1.8 kg (Lord, 1963; see table) with females slightly larger than the males (Nowak and Paradiso, 1983; see table). Cottontail body weight varies seasonally, increasing during spring and summer and declining during winter in some areas; different patterns occur in other areas (Chapman et al., 1982; Pelton and Jenkins, 1970).

Habitat. The eastern cottontail is unique to the genus because of the large variety of habitats that it occupies, including glades and woodlands, deserts, swamps, prairies, hardwood forests, rain forests, and boreal forests (Nowak and Paradiso, 1983). Open grassy areas generally are used for foraging at night, whereas dense, heavy cover typically is used for shelter during the day (Chapman et al., 1982). During winter, cottontails rely more on woody vegetation for adequate cover (Allen, 1984).

Food habits. During the growing season, cottontails eat herbaceous plants (e.g., grasses, clover, timoth, alfalfa). During the winter in areas where herbaceous plants are not available, they consume woody vines, shrubs, and trees (e.g., birch, maple, apple) (Chapman et al., 1982). In Ohio, bluegrass and other grasses made up a large portion of the eastern cottontail's diet, except during snow cover (Chapman et al., 1982). During the winter in Connecticut, the principle diet of eastern and New England cottontails consists of bark and twigs, shrubs and vines, berries, and willow (Dalke and Sime, 1941). In agricultural areas, corn, soybeans, wheat, and other crops may comprise a large portion of their diet (Chapman et al., 1982). Younger rabbits prefer the more succulent weedy forbs that contain more digestible energy and protein (Chapman et al., 1982). Coprophagy (ingestion of feces) has been reported in *S. floridanus* (Kirkpatrick, 1956).

Temperature regulation and molt. Eastern cottontails do not undergo hibernation or torpor; they are active all year, showing peaks of daily activity at dawn and dusk (Chapman et al., 1980). Adults molt gradually over about 9 mo of the year, with two peak molting periods (Spinner, 1940). In Connecticut, the spring peak occurs in May and

June and the fall peak occurs in September and October (Spinner, 1940). In Texas, spring and fall molts peak in April and October, respectively (Bothma and Teer, 1982).

Breeding activities and social organization. Breeding activity begins later at higher elevations and at higher latitudes (Conaway et al., 1974), by January in Alabama and by late March in southern Wisconsin (Chapman et al., 1980). Several studies have shown that continued harsh winter weather may delay the onset of the breeding season (Hamilton, 1940; Conaway and Wight, 1962; Wight and Conaway, 1961). Breeding seasons are longer in the southern states (Lord, 1960). The onset of breeding varies between different populations and within the same population from year to year (Chapman et al., 1980). Males may fight to establish dominance hierarchies for access to females (Chapman and Ceballos, 1990; Nowak and Paradiso, 1983). Lagomorphs in general are induced ovulators, and cottontails in particular demonstrate a synchronized breeding season, with conception immediately after the birth of a litter (Chapman et al., 1982).

Home range and resources. Cottontails are found in a variety of habitats that contain weedy forbs and perennial grasses; they prefer thick, short, woody perennials that provide escape sites (Chapman and Ceballos, 1990). Cottontails usually do not defend territories; the home ranges of different age and sex groups tend to overlap, especially in fall and winter when they look for areas offering a combination of food and cover (Chapman et al., 1980, 1982). Home ranges are smaller when thick vegetation provides abundant food and larger in habitats with less food (Chapman et al., 1982). Home ranges also are smaller during severe winter weather than at other times (Chapman et al., 1982). During the breeding season, females build elaborate nests within slanting holes in the ground where they give birth to their altricial (helpless) young. These burrows are vulnerable to flooding (Chapman et al., 1982). The size of male home ranges during the breeding season can be more than double that in winter (Nowak and Paradiso, 1983; Trent and Rongstad, 1974).

Population density. Population density depends on the availability of resources (e.g., food, cover) in an area, and tends to cycle over a period of several years (Chapman and Ceballos, 1990). Usual densities range from 1 to 5 animals per hectare, although values as high as 14 per hectare have been reported (Chapman and Ceballos, 1990; Chapman et al., 1982).

Population dynamics. The eastern cottontail exhibits the highest fecundity of the genus; they often produce 25 to 35 young per year (Chapman and Ceballos, 1990). Gestation lasts approximately 1 mo (Chapman et al., 1982). Females may produce five to seven litters per year, and juvenile breeding has been reported (Chapman et al., 1982). The first and last litters of the year are usually the smallest (Chapman et al., 1977). Cottontails have more litters with fewer young each in the southern states (Lord, 1960). Young leave the nest when about age 14 to 16 d, although they may not be fully weaned until a few weeks later (Ecke, 1955). Female cottontails are capable of breeding by age 5 mo, and males as early as 3 mo (Bothma and Teer, 1977). Adult mortality is high, from approximately 65 to 75 percent per year in some places (Eberhardt et al., 1963). Juvenile mortality is even higher, between 85 and 90 percent in the same areas (Eberhardt et al., 1963).

Similar species (from general references)

- The mountain cottontail (*Sylvilagus nuttallii*) (Nuttall's cottontail) is smaller (30 to 36 cm in length and 0.7 to 1.3 kg) than the eastern cottontail. The only cottontail through most of its range - the western United States - it lives in thickets and sagebrush, around loose rocks, cliffs, and mountains. In the southwest, it lives in forests.

- The New England cottontail (*Sylvilagus transitionalis*) is similar in size to the eastern cottontail and inhabits brushy areas, open forests, and mountain terrain in New England, extending down the Appalachians into the southern United States. In recent years, it has disappeared throughout much of the northeastern United States, apparently because of competition with *S. floridanus.*

- The desert cottontail (*Sylvilagus audubonii*) (Audubon's cottontail) (30 to 38 cm in length and 0.6 to 1.2 kg) is common in valleys in the arid southwest, although its range extends south to Mexico and north into the Rocky Mountains. It inhabits open plains, foothills, and low valleys and also areas of grass, sagebrush, pinyons and junipers. It is most active from late afternoon throughout the night.

- The brush rabbit (*Sylvilagus bachmani*) (28 to 33 cm; 0.6 to 0.8 kg) is usually seen around thick cover and rarely uses a burrow. It feeds on green vegetation, including lawns when in suburban areas. The species is found along the Pacific coast from the Columbia River in the north to the tip of Baja California in the south.

- The marsh rabbit (*Sylvilagus palustris*) is similar in size to the eastern cottontail and ranges from southeastern North Carolina to Florida. As the name implies, it inhabits swamps and hummocks, as well as wet bottomlands. Mostly nocturnal, it feeds on marsh vegetation, rhizomes, and bulbs.

- The swamp rabbit (*Sylvilagus aquaticus*) is similar in size to the eastern cottontail and is a good swimmer found in swamps, marshes, and wet bottomlands. It ranges primarily in the south, from Texas eastward. It nests beneath logs or in the bases of stumps, rarely using a burrow and may harm crops near swamps.

- The pygmy rabbit (*Sylvilagus idahoensis*) is markedly smaller (22 to 28 cm; 0.2 to 0.5 kg) than the eastern cottontail, lacks a conspicuous tail, and is considered by some to be a distinct genus (*Brachylagus*). Its range is limited to several western states, where it inhabits clumps of tall sagebrush. It is mostly nocturnal.

- The white-tailed jackrabbit (*Lepus townsendii*), larger (46 to 56 cm; 2.2 to 4.5 kg) than the eastern cottontail, is limited to the northern United States

west of the Great Lakes, into southern Canada. It inhabits open, grassy, or sagebrush plains and may damage hay crops and small trees.

- The black-tailed jackrabbit (*Lepus californicus*) (43 to 53 cm; 1.3 to 3.1 kg) is the most common jackrabbit in the grasslands and open areas of the western United States, where it inhabits open prairies and deserts with little vegetation. It is mostly nocturnal.

- The snowshoe hare (*Lepus americanus*) (33 to 46 cm; 0.9 to 1.8 kg) inhabits swamps, forests, and thickets in the northern United States and Canada. During summer, it feeds on succulent vegetation and during winter on twigs, buds, and bark. Its home range is about 4 ha, but populations fluctuate widely.

General references

Allen (1984); Burt and Grossenheider (1980); Chapman et al. (1980, 1982); Lord (1963); Nowak and Paradiso (1983); and Palmer and Fowler (1975).

Eastern Cottontail (*Sylvilagus floridanus*)

Factors	Age/Sex/ Cond./Seas.	Mean	Range or (95% CI of mean)	Location (subspecies)	Reference	Note No.
Body Weight (g)	A M	1,134 ± 122 SD	801 - 1,411	w Maryland, West Virginia	Chapman & Morgan, 1973	
	A F	1,244 ± 165 SD	842 - 1,533			
	A B winter	1,176	793 - 1,671	Georgia	Pelton & Jenkins, 1970	
	A B spring	1,286	898 - 1,630	all areas combined		
	A B summer	1,197	910 - 1,608			
	A B fall	1,255	886 - 1,669			
				Georgia		
	A B not breed.	1,229 ± 113 SD	1,093 - 1,461	mountain	Pelton & Jenkins, 1970	
	A B not breed.	1,313 ± 141 SD	986 - 1,671	coastal		
	A B not breed.	1,132 ± 136 SD	793 - 1,579	Piedmont		
	A B	1,231 ± 164	700 - 1,800	Illinois	Lord, 1963	
	neonate	42.2	36.0 - 49.0	Alabama	Hill, 1972b	
	age:					
	10 d	58		Illinois	Lord, 1963	
	30 d	159				
	50 d	401				
	101 d	822				
	149 d	1,106				
Growth Rate (g/d)	day 0 - 30	3.2		Illinois	Lord, 1963	
	day 11 - 30	3.7				
	day 31 - 50	8.8				
	day 51 - 100	11.3				
	day 101 - 150	6.4				
Metabolic Rate (kcal/kg-d)	A B basal	71			estimated	1
	A B free-living	203	(77 - 535)		estimated	2
Food Ingestion Rate (g/g-d)						3
Water Ingestion Rate (g/g-d)	A B	0.097			estimated	4

Eastern Cottontail (*Sylvilagus floridanus*)

Factors	Age/Sex/ Cond./Seas.	Mean	Range or (95% CI of mean)	Location (subspecies)	Reference	Note No.
Inhalation Rate (m^3/d)	A B	0.63			estimated	5
Surface Area (cm^2)	A B	1,254			estimated	6

Dietary Composition				Winter	Location (subspecies)/ Habitat(measure)	Reference	Note No.
trees	13	2	7	39	Connecticut (*mallarus*)/ various	Dalke & Sime, 1941 (85% for *mallarus* subspecies, remainder for similar species *S. transitionalis*)	
shrubs & vines	4	2	27	40			
herbs	44	23	34	5	(% frequence of occurrence; observations of feeding on plants)		
grasses, sedges, rushes	26	56	30	6			
crops	13	17	2	10			
woody plants	17	23	20	100	Maryland/forest	Spencer & Chapman, 1986	
forbs	19	30	46				
grasses	64	47	34		(% frequency of occurrence; stomach contents)		
bluegrass	34	34	25	32	Ohio (*mearnsi*)/NS	Dusi, 1952	
orchard grass	4	1	-	1			
timothy grass	5	12	7	1	(% frequency of occurrence; scats)		
Nodding wild rye	5	11	8	4			
Canada goldenrod	-	-	3	-			
red clover	-	-	6	-	(in winter, woody tissues predominated in the unidentified category)		
unidentified	52	42	51	62			

Eastern Cottontail (*Sylvilagus floridanus*)

Population Dynamics	Age/Sex/ Cond./Seas.	Mean	Range	Location (subspecies)/Habitat	Reference	Note No.
Home Range Size (ha)	A M winter	3.05 ± 0.72 SE		Wisconsin/woodlot	Dixon et al., 1981	
	A F winter	2.99 ± 0.28 SE				
	A M winter	3.2		c Pennsylvania/mixed	Althoff and Storm, 1989	
	A M spring	7.2				
	A M summer	7.8				
	A M fall	3.1				
	A F winter	2.1		c Pennsylvania/mixed	Althoff and Storm, 1989	
	A F spring	2.8				
	A F summer	2.4				
	A F fall	1.5				
	A M spring	2.8		sw Wisconsin/woodlot	Trent & Rongstad, 1974	
	A M					
	early summer	4.0				
	late summer	1.5				
	A F spring	1.7				
	A F summer	0.8				
Population Density (N/ha)	fall	1.1 ± 0.41 SD	0.41 to 2.08	c Michigan/woods, marsh, fields	Eberhardt et al., 1963	
	fall		3.0 - 5.9	Illinois/old field	Lord & Casteel, 1960	
	winter		0.67 - 1.5			
	summer	4.2		sw Wisconsin/farm	Trent & Rongstad, 1974	
	fall	10.1				
	spring	3.7				
Litter Size		3.5 ± 0.042 SE		Alabama/across six habitats	Hill, 1972c	
		5.3		Illinois/NS	Lord, 1963	
		6.0		Missouri/wildlife area	Conaway et al., 1963	
Litters/Year		4.6		w Maryland/NS	Chapman et al., 1977	
			5 - 7	several locations and habitats	Chapman et al., 1980	7
Days Gestation		28	25 - 35	several locations and habitats	Chapman et al., 1982	

Eastern Cottontail (*Sylvilagus floridanus*)

Population Dynamics	Age/Sex/ Cond./Seas.	Mean	Range	Location (subspecies)/Habitat	Reference	Note No.
Age at Weaning		20 - 25 days		Illinois/NS	Ecke, 1955	
Age at Sexual Maturity	F M		3 - 6 months 3 - 6 months	s Texas/grassland Missouri/NS	Lord, 1961, Negus, 1959b Conaway & Wight, 1963	8
Annual Mortality Rates (%)	B B B B	80 65 ± 7 SD		sw Wisconsin/farm Illinois/sanctuary	Trent & Rongstad, 1974 Lord, 1963	
Longevity	B	1.25		Kentucky/NS	Bruna, 1952	9
Seasonal Activity	**Begin**	**Peak**	**End**	**Location**		**Note No.**
Mating	mid-March year-round	 January - April	mid-September	Connecticut s Texas	Dalke, 1942 Bothma & Teer, 1977	9
	April	May - July	August	wc New York	Hamilton, 1940	
	August September February March	October Sept. - Oct. April May - June	December November July August	s Texas Connecticut s Texas Connecticut	Bothma & Teer, 1982 Spinner, 1940 Bothma & Teer, 1982 Spinner, 1940	

1 Estimated using equation 3-43 (Boddington, 1978) and body weights from Lord (1963).
2 Estimated using equation 3-46 (Nagy, 1987) and body weights from Lord (1963).
3 See Chapters 3 and 4 for approaches to estimating food ingestion rates.
4 Estimated using equation 3-17 (Calder and Braun, 1983) and body weights from Lord (1963).
5 Estimated using equation 3-20 (Stahl, 1967) and body weights from Lord (1963).
6 Estimated using equation 3-22 (Stahl, 1967) and body weights from Lord (1963).
7 Summary of several studies.
8 Cited in Conaway and Wight (1963).
9 Cited in Chapman et al. (1980).
10 Cited in Chapman et al. (1982).

References (including Appendix)

Allen, D. L. (1938) Breeding of the cottontail rabbit in southern Michigan. Am. Midl. Nat. 20: 464-469.

Allen, D. L. (1939) Michigan cottontails in winter. J. Wildl. Manage. 3: 307-322.

Allen, A. W. (1984) Habitat suitability index models: Eastern cottontail. U.S. Fish Wildl. Serv. Biol. Rep. 82(10.66); 23 pp.

Althoff, D. P.; Storm, G. L. (1989) Daytime spatial characteristics of cottontail rabbits in central Pennsylvania. J. Mammal. 70: 820-824.

Bailey, J. A.; Siglin, R. J. (1966) Some food preferences of young cottontails. J. Mammal. 47: 129-130.

Barkalow, F. S., Jr. (1962) Latitude related to reproduction in the cottontail rabbit. J. Wildl. Manage. 26: 32-37.

Beule, J. D. (1940) Cottontail nesting-study in Pennsylvania. Trans. North Am. Wildl. Nat. Resour. Conf. 5: 320-328.

Bittner, S. L.; Chapman, J. A. (1981) Reproductive and physiological cycles in an island population of *Sylvilagus floridanus*. In: Myers, K. and MacInnes, C. D., eds. Proceedings world lagomorph conference; August 1979; Guelph, Ontario. Guelph, Ontario, Canada: University of Guelph; pp. 182-203.

Boddington, M. J. (1978) An absolute metabolic scope for activity. J. Theor. Biol. 75: 443-449.

Bothma, J. P.; Teer, J. G. (1977) Reproduction and productivity in south Texas cottontail rabbits. Mammalia 41: 253-281.

Bothma, J. P.; Teer, J. G. (1982) Moulting in the cottontail rabbit in south Texas. Mammalia 46: 241-245.

Bruna, J. F. (1952) Kentucky rabbit investigations. Fed. Aid Proj. 26-R. Kentucky; 83 pp.

Burt, W. H.; Grossenheider, R. P. (1980) A field guide to the mammals of North America north of Mexico. Boston, MA: Houghton Mifflin Co.

Calder, W. A.; Braun, E. J. (1983) Scaling of osmotic regulation in mammals and birds. Am. J. Physiol. 244: R601-R606.

Chapman, J. A.; Ceballos, G. (1990) Chapter 5: the cottontails. In: Chapman, J. A.; Flux, J. E., eds. Rabbits, hares and pikas; status survey and conservation action plan. International Union for Conservation of Nature and Natural Resources in collaboration with World Wide Fund for Nature. Oxford, UK: Information Press.

Chapman, J. A.; Morgan, R. P., II. (1973) Systematic status of the cottontail complex in western Maryland and nearby West Virginia. Wildl. Monogr. 36: 1-54.

Chapman, J. A.; Harman, A. L.; Samuel, D. E. (1977) Reproductive and physiological cycles in the cottontail complex in western Maryland and nearby West Virginia. Wildl. Monogr. 56: 1-73.

Chapman, J. A.; Hockman, J. G.; Edwards, W. R. (1982) Cottontails. In: Chapman, J. A.; Feldhammer, G. A., eds. Wild mammals of North America. Baltimore, MD: Johns Hopkins University Press; pp. 83-123.

Chapman, J. A.; Hockman, J. G.; Ojeda, M. M. (1980) *Sylvilagus floridanus*. American Society of Mammalogists; Mammalian Species No. 136; 8 pp.

Conaway, C. H.; Wight, H. M. (1962) Onset of reproductive season and first pregnancy of the season in cottontails. J. Wildl. Manage. 26: 278-290.

Conaway, C. H.; Wight, H. M. (1963) Age at sexual maturity of young male cottontails. J. Mammal. 44: 426-427.

Conaway, C. H.; Wight, H. M.; Sadler, K. C. (1963) Annual production by a cottontail population. J. Wildl. Manage. 27: 171-175.

Conaway, K.; Sadler, C.; Hazelwood, D. H. (1974) Geographic variation in litter size and onset of breeding in cottontails. J. Wildl. Manage. 38: 473-481.

Crunden, C. W.; Hendrickson, G. O. (1955) Evaluations of techniques estimating a Mearns cottontail population. Proc. Iowa Acad. Sci. 62: 498-501.

Dalke, P. D. (1942) The cottontail rabbits in Connecticut. Bull. Connecticut Geol. Nat. Hist. Surv. 65: 1-97.

Dalke, P. D.; Sime, P. R. (1941) Food habits of the eastern and new England cottontails. J. Wildl. Manage. 5: 216-228.

de Poorter, M.; van der Loo, W. (1981) Report on the breeding and behavior of the volcano rabbit at the Antwerp Zoo. In: Myers, K.; MacInnes, C. D., eds. Proceedings of the world lagomorph conference; August 1979; Guelph, Ontario. Guelph, Ontario, Canada: University of Guelph; pp. 956-972.

Dixon, K. R.; Chapman, J. A.; Rongstad, O. J.; et al. (1981) A comparison of home range size in *Sylvilagus floridanus* and *S. bachmani.* In: Myers, K.; MacInnes, C. D., eds. Proceedings of the world lagomorph conference; August 1979; Guelph, Ontario. Guelph, Ontario, Canada: University of Guelph; pp. 541-548.

Dusi, J. L. (1952) The food habits of several populations of cottontail rabbits in Ohio. J. Wildl. Manage. 16: 180-186.

Eberhardt, L.; Peterle, T. J.; Schofield, R. (1963) Problems in a rabbit population study. Wildlife Society Wildlife Monographs No. 10, Michigan Department of Conservation and Ohio State University; 51 pp.

Ecke, D. H. (1955) The reproductive cycle of the Mearns cottontail in Illinois. Am. Midl. Nat. 54: 294-311.

Edwards, W. R.; Havera, S. P.; Labisky, R. F.; et al. (1981) The abundance of cottontails in relation to agricultural land use in Illinois (U.S.A.) 1956-1978, with comments on mechanism of regulation. In: Myers, K.; MacInnes, C. D., eds. Proceedings of the world lagomorph conference; August 1979; Guelph, Ontario. Canada, Guelph, Ontario: University of Guelph; pp. 761-789.

Eisenberg, J. F. (1981) The mammalian radiations; an analysis of trends in evolution, adaptation, and behavior. Chicago, IL: University of Chicago Press.

Evans, R. D.; et al. (1965) Regional comparisons of cottontail reproduction in Missouri. Amer. Midland Nat. 74: 176-184.

Gerstell, R. (1937) Management of the cottontail rabbit in Pennsylvania. Pa. Game News; May.

Hamilton, W. J., Jr. (1940) Breeding habits of the cottontail rabbit in New York state. J. Mammal. 21: 8-11.

Haugen, A. O. (1942) Life history studies of the cottontail rabbit in southwestern Michigan. Am. Midl. Nat. 28: 204-244.

Heard, L. P. (1963) Notes on cottontail rabbit studies in Mississippi. Proc. Annu. Conf. Southeast. Assoc. Game and Fish Comm. 17: 85-92.

Hendrickson, G. O. (1943) Gestation period in Mearns cottontail. J. Mammal. 24: 273.

Hill, E. P., III. (1972a) The cottontail rabbit in Alabama. Auburn Univ., Agric Exp. Stn. Bull. 440; 103 pp.

Hill, E. P., III. (1972b) An evaluation of several body measurements for determining age in live juvenile cottontails. Proc. Annu. Conf. Southeast. Assoc. Game and Fish Comm. 25: 269-281.

Hill, E. P., III. (1972c) Litter size in Alabama cottontails as influenced by soil fertility. J. Wildl. Manage. 36: 1199-1209.

Hinds, D. S. (1973) Acclimation of thermoregulation in the desert cottontail, *Sylvilagus audubonii*. J. Mammal. 54: 708-728.

Janes, D. W. (1959) Home range and movements of the eastern cottontail in Kansas. Univ. Kansas Publ., Mus. Nat. Hist. 10: 553-572.

Jurewicz, R. L.; Cary, J. R.; Rongstad, O. J. (1981) Spatial relationships of breeding female cottontail rabbits in southwestern Wisconsin. In: Myers, K.; MacInnes, C. D., eds. Proceedings of the world lagomorph conference; August 1979; Guelph, Ontario. Guelph, Ontario, Canada: University of Guelph; pp. 295-309.

Kirkpatrick, C. M. (1956) Coprophagy in the cottontail. J. Mammal. 37: 300.

Leite, E. A. (1965) Relation of habitat structure to cottontail rabbit production, survival and harvest rates. Job Prog. Rep., Ohio J.A.P.R. Proj. W-103-R-8, Job 12; 12 pp.

Lord, R. D., Jr. (1960) Litter size and latitude in North American mammals. Am. Midl. Nat. 64: 488-499.

Lord, R. D., Jr. (1961) Magnitudes of reproduction in cottontail rabbits. J. Wildl. Manage. 25: 28-33.

Lord, R. D., Jr. (1963) The cottontail rabbit in Illinois. Tech. Bull. Illinois Dept. Conserv. 3: 1-94.

Lord, R. D., Jr.; Casteel, D. A. (1960) Importance of food to cottontail winter mortality. Trans. North Am. Wildl. Conf. 25: 267-274.

Marsden, H. M.; Conaway, C. H. (1963) Behavior and the reproductive cycle in the cottontail. J. Wildl. Manage. 27: 161-170.

Martin, A. C.; Zim, H. S.; Nelson, A. L. (1951) American wildlife and plants. New York, NY: McGraw-Hill Book Company, Inc.

Nagy, K. A. (1987) Field metabolic rate and food requirement scaling in mammals and birds. Ecol. Monogr. 57: 111-128.

Negus, N. C. (1959a) Pelage stages in the cottontail rabbit. J. Mammal. 39: 246-252.

Negus, N. C. (1959b) Breeding of subadult cottontail rabbits in Ohio. J. Wildl. Manage. 23: 451-452.

Nowak, R. M.; Paradiso, J. L. (1983) Walker's mammals of the world, v. 3, 4th ed. Baltimore, MD: Johns Hopkins University Press.

Palmer, E. L.; Fowler, H. S. (1975) Fieldbook of natural history. New York, NY: McGraw-Hill Book Co.

Pelton, M. R.; Jenkins, J. H. (1970) Weights and measurements of Georgia cottontails and an ecological principle. Proc. Annu. Conf. Southeast. Assoc. Game and Fish Comm. 24: 268-277.

Pelton, M. R.; Jenkins, J. H. (1971) Productivity of Georgia cottontails. Proc. Annu. Conf. Southeast. Assoc. Game and Fish Comm. 25: 261-268.

Pelton, M. R.; Provost, E. E. (1972) Onset of breeding and breeding synchrony by Georgia cottontails. J. Wildl. Manage. 36: 544-549.

Peterson, R. L. (1966) The mammals of eastern Canada. Toronto, Canada: Oxford University Press.

Pils, C. M.; Martin, M. A. (1978) Population dynamics, predator-prey relationships and management of the red foxes in Wisconsin. Wisc. Dept. Nat. Resour.; Tech. Bull. 105; 56 pp.

Prouty, J. (1937) Cottontails of Massachusetts [master's thesis]. MA: Massachusetts State College.

Rongstad, O. J. (1966) Biology of penned cottontail rabbits. J. Wildl. Manage. 30: 312-319.

Sandt, J. L.; McKee, R. M. (1978) Upland wildlife investigations. Unpublished Federal Aid Performance Report (Maryland); W-47-7; 4 pp.

Schierbaum, D. (1967) Job completion report, evaluation of cottontail rabbit productivity. Albany, NY: Pittman-Robertson Proj. W-84-R-12; 21 pp.

Seton, E. T. (1929) Lives of game animals. Garden City, NY: Doubleday, Doran and Co., Inc.

Sheffer, D. E. (1957) Cottontail rabbit propagation in small breeding pens. J. Wildl. Manage. 21: 90.

Spencer, R. K.; Chapman, J. A. (1986) Seasonal feeding habits of New England and eastern cottontails. Proc. Penn. Acad. Sci. 60: 157-160.

Spinner, G. P. (1940) Molting characteristics in the eastern cottontail rabbits. J. Mammal. 21: 429-434.

Stahl, W. R. (1967) Scaling of respiratory variables in mammals. J. Appl. Physiol. 22: 453-460.

Trent, T. T.; Rongstad, O. S. (1974) Home range and survival of cottontail rabbits in southwestern Wisconsin. J. Wildl. Manage. 38: 459-472.

Trethewey, D. E.; Verts, B. J. (1971) Reproduction in eastern cottontail rabbits in western Oregon. Am. Midl. Nat. 86: 463-476.

Wainright, L. C. (1969) A literature review on cottontail reproduction. Colo. Div. Game, Fish Parks, Spec. Rep. No. 19; 24 pp.

Wight, H. M.; Conaway, C. H. (1961) Weather influences on the onset of breeding in Missouri cottontails. J. Wildl. Manage. 25: 87-89.

2.3. REPTILES AND AMPHIBIANS

Table 2-3 summarizes the species of reptiles and amphibians included in this section. For range maps, refer to the general references identified in the individual species profiles. The remainder of this section is organized by species in the order presented in Table 2-3. The availability of information in the published literature varies substantially among species, which is reflected in the profiles. The measures used to describe body length are included in each species profile. Body weight is reported as fresh wet weight (including the shell for turtles), unless otherwise noted.

Unlike birds and mammals for which a single common name usually covers all subspecies, many reptile and amphibian subspecies are recognized by different common names. For example, there are two subspecies of *Rana clamitans*: the green frog and the bronze frog (Section 2.3.7). There are four subspecies of *Terrapene carolina*: eastern box turtle, three-toed box turtle, Florida box turtle, and Gulf Coast box turtle (Section 2.3.3). In this case, other species exist that are also known as box turtles: the ornate and desert box turtles belong to the species *T. ornata*. For species that could be confused with other species unless a subspecies common name is used, we selected the common name of the most widespread subspecies to use in the tables and titles of the species profile. As with the other species in the Handbook, however, the profile covers all subspecies for the selected species that were represented in the literature reviewed.

In these profiles, we use the word hibernation for the period of dormancy that reptiles and amphibians undergo during winter, when they change their metabolism to accommodate the low (often near freezing) temperatures and lack of food (and oxygen). Use of the word for this group is controversial, however, because the word was developed initially to describe mammalian winter dormancy. Some investigators argue that a different word, brumation, should be established to describe the overwintering dormancy and associated metabolic changes for reptiles and amphibians (Hutchison, 1979). Others disagree, because significant physiological changes also occur in reptiles and amphibians during winter dormancy. They argue that, although the physiological changes are different from those in mammals, the word hibernation is a general term that does not specify what

Table 2-3. Reptiles and Amphibians Included in the Handbook

Order	Common name	Scientific name	Section
Chelydridae	snapping turtle	*Chelydra serpentina*	2.3.1
Emydidae	painted turtle	*Chrysemys picta*	2.3.2
	eastern box turtle[a]	*Terrapene carolina carolina*	2.3.3
Colubridae	racer	*Coluber constrictor*	2.3.4
	northern water snake[a]	*Nerodia sipedon sipedon*	2.3.5
Salamandridae	eastern newt	*Notophthalmus viridescens*	2.3.6
Ranidae	green frog[a]	*Rana clamitans clamitans*	2.3.7
	bullfrog	*Rana catesbeiana*	2.3.8

[a]Additional subspecies also are included in the profile.

metabolic changes occur to allow overwintering in a dormant state (Gatten, 1987). We have chosen this latter interpretation for the Handbook.

References

Gatten, R. E., Jr. (1987) Cardiovascular and other physiological correlates of hibernation in aquatic and terrestrial turtles. Am. Zool. 27: 59-68.

Hutchison, V. H. (1979) Thermoregulation. In: Harless, M.; Morlock, H., eds. Turtles: perspectives and research. Toronto, Canada: John Wiley and Sons; pp. 207-227.

2.3.1. Snapping Turtle (snapping turtles)

Order *Testudines*, Family *Chelydridae*. Snapping turtles are among the largest of the freshwater turtles. They are characterized by large heads with powerful hooked jaws. There are only two species of this family in North America (the snapping turtle, including both the common and Florida snapping turtles, and the alligator snapping turtle).

Selected species

The snapping turtle (*Chelydra serpentina*) is primarily aquatic, inhabiting freshwater and brackish environments, although they will travel overland (DeGraaf and Rudis, 1983; Ernst and Barbour, 1972; Smith, 1961). There are two subspecies recognized in North America that are primarily distinguished by range: *C. s. serpentina* (the common snapping turtle, which is the largest subspecies, primarily occupies the United States east of the Rockies, except for the southern portions of Texas and Florida), and *C. s. osceola* (the Florida snapping turtle, found in the Florida peninsula) (Conant and Collins, 1991). In this profile, studies refer to the *serpentina* subspecies unless otherwise noted.

Body size. Adult snapping turtles are large, 20 to 37 cm in carapace length, and males attain larger sizes than females (Congdon et al., 1986; Ernst and Barbour, 1972; Galbraith et al., 1988). In a large oligotrophic lake in Ontario Canada, adult males averaged over 10 kg, whereas the females averaged 5.2 kg (Galbraith et al., 1988). In other populations, the difference in size between males and females often is less (Congdon et al., 1986; Galbraith et al., 1988; Hammer, 1969). They reach sexual maturity at approximately 200 mm in carapace length (Mosimann and Bider, 1960). The cool, short activity season in more northern areas results in slower growth rates and longer times to reach sexual maturity (Bury, 1979).

Habitat. In the east, snapping turtles are found in and near permanent ponds, lakes, and marshes. However, in the arid west, the species is primarily found in larger rivers, because these are the only permanent water bodies (Toner, 1960, cited in Graves and Anderson, 1987). They are most often found in turbid waters with a slow current (Graves and Anderson, 1987). They spend most of their time lying on the bottom of deep pools or buried in the mud in shallow water with only their eyes and nostrils exposed. Froese (1978) observed that young snapping turtles show a preference for areas with some obstructions that may provide cover or food.

Food habits. Snapping turtles are omnivorous. In early spring, when limited aquatic vegetation exists in lakes and ponds, they may eat primarily animal matter; however, when aquatic vegetation becomes abundant, they become more herbivorous (Pell, 1941, cited in Graves and Anderson, 1987). Young snapping turtles are primarily carnivorous and prefer smaller streams where aquatic vegetation is less abundant (Lagler, 1943; Pell, 1941, cited in Graves and Anderson, 1987). Snapping turtles consume a wide variety of animal material including insects, crustaceans, clams, snails, earthworms, leeches, tubificid worms, freshwater sponges, fish (adults, fry, and eggs), frogs and toads, salamanders, snakes, small turtles, birds, small mammals, and carrion and plant material including various algae (Alexander, 1943; Graves and Anderson, 1987; Hammer, 1969;

Punzo, 1975). Budhabatti and Moll (1988) observed no difference between the diets of males and females who fed at the surface, midpelagic, and benthic levels. Bramble (1973) suggested that the pharyngeal mechanism of feeding (i.e., drawing water with food objects into the mouth) prevents snapping turtles from ingesting food above the air-water interface.

Temperature regulation and daily activities. Snappers are most active at night. During the day, they occasionally leave the water to bask on shore, but basking is probably restricted by intolerance to high temperatures and by rapid loss of moisture (Ernst and Barbour, 1972). In a study in Ontario, Canada, Obbard and Brooks (1981) found that the turtles were active in the early morning and early evening and basked in the afternoon but were rarely active at night. Active turtles were found in deeper waters than inactive snappers (Obbard and Brooks, 1981). Cloacal temperatures of 18.7 to 32.6°C were reported for snapping turtles captured in the water in Sarasota County, Florida, between May and October (Punzo, 1975).

Hibernation. Snapping turtles usually enter hibernation by late October and emerge sometime between March and May, depending on latitude and temperature. To hibernate, they burrow into the debris or mud bottom of ponds or lakes, settle beneath logs, or retreat into muskrat burrows or lodges. Snapping turtles have been seen moving on or below the ice in midwinter. Large congregations sometimes hibernate together (Budhabatti and Moll, 1988; Ernst and Barbour, 1972).

Breeding activities and social organization. Mating occurs any time turtles are active from spring through fall, depending on latitude (Ernst and Barbour, 1972). Some investigators believe that male snapping turtles are territorial (Kiviat, 1980; Pell, 1941, cited in Galbraith et al., 1987), but Galbraith et al. (1987) doubts that males defend their home ranges against other males. Sperm may remain viable in the female for several years (Smith, 1956). Nesting occurs from late spring to early fall, peaking in June (Ernst and Barbour, 1972). Hammer (1969) observed that larger, older females nested earlier in the season than did smaller, younger ones. Females often move up small streams to lay eggs (Ewert, 1976, cited in Graves and Anderson, 1987). The nest site may be in the soil of banks or in muskrat houses but more commonly is in the open on south-facing slopes and may be several hundred meters from water (DeGraaf and Rudis, 1983). The turtle digs a 4- to 7-in cavity on dry land, preferably in sand, loam, or vegetable debris. The duration of incubation is inversely related to soil temperature (Ernst and Barbour, 1972; Yntema, 1978, cited in Graves and Anderson, 1987). In more northerly populations, hatchlings may overwinter in the nest (DeGraaf and Rudis, 1983).

Home range and resources. Most turtles stay primarily within the same marsh or in one general area from year to year ((Hammer, 1969; Obbard and Brooks, 1981). The summer home range includes a turtle's aquatic foraging areas, but females may need to travel some distance outside of the foraging home range to find a suitable nest site (DeGraaf and Rudis, 1983). Obbard and Brooks (1980) found that females tagged at their nesting site moved an average of 5.5 km (± 1.8 SD) from the nest site afterwards. Lonke and Obbard (1977) observed that 91.9 percent of the turtles in one population returned to the same nesting site a year after having been tagged there. Home ranges overlap both between and within sexes (Obbard and Brooks, 1981). Young snapping turtles use

different habitats than adults; they tend to remain in small streams until shortly before maturity, when they migrate to habitats preferred by adults (e.g., ponds, marshes, lakes) (Hammer, 1971; Minton, 1972, cited in Graves and Anderson, 1987).

Population density. The density of snapping turtles appears to be positively correlated with the productivity of the surface water body (e.g., density in a eutrophic surface water body is higher than in an oligotrophic lake) (Galbraith et al., 1988). Specific habitat characteristics and intraspecific interactions contribute to the variability of observed population densities in snapping turtles (Froese and Burghardt, 1975).

Population dynamics. Females do not begin laying eggs until age 6 to 19 yr depending on latitude and when they reach an appropriate size (approximately 200 mm carapace) (Galbraith et al. 1989; Mosimann and Bider, 1960). Males mature a few years earlier than females (see table). Females may lay one or two clutches per season (Minton, 1972, cited in Graves and Anderson, 1987). Clutch size increases with female body size; Congdon et al. (1987) calculated the relationship between clutch size (CS) and plastron length (PL in mm) for a population in southeastern Michigan:

$$CS = -21.227 + 0.242\ PL,\ (r^2 = 0.409,\ n = 65).$$

Clutch size has also been positively correlated with latitude (Petokas and Alexander, 1980). Hammer (1969) found that mammalian predators destroyed over 50 percent of the turtle nests in a South Dakota marsh, and in undisturbed nests, hatchling success was less than 20 percent. Petokas and Alexander (1980) observed a 94 percent predation rate of nests under study in northern New York. Adult mortality is low, corresponding with the long lives exhibited by these turtles (see table).

Similar species (from general references)

- The alligator snapping turtle (*Macroclemys temmincki*) is much larger (16 to 68 kg; 38 to 66 cm carapace) than the common snapping turtle and is one of the largest turtles in the world. Its range is from northern Florida to east-central Texas and north in the Mississippi Valley.

General references

Conant and Collins (1991); DeGraaf and Rudis (1983); Ernst and Barbour (1972); Graves and Anderson (1987).

Snapping Turtle (*Chelydra serpentina*)

Factors	Age/Sex/ Cond./Seas.	Mean	Range or (95% CI of mean)	Location	Reference	Note No.
Body Weight (kg)	A M summer	10.5 ± 2.85 SD		Ontario, Canada/large oligotrophic lake	Galbraith et al., 1988	
	A F summer	5.24 ± 0.85 SD				
	J B summer	1.15 ± 0.80 SD				
	A M summer	5.52 ± 2.23 SD		Ontario, Canada/eutrophic pond	Galbraith et al., 1988	
	A F summer	5.03 ± 1.12 SD				
	J B summer	1.40 ± 0.20 SD				
	A M	4.16 ± 0.28 SE		Michigan	Congdon et al., 1986	
	A F	3.16 ± 0.20 SE				
	J B	0.80 ± 0.07 SE				
	at hatching	0.0057		NS	Ernst & Barbour, 1972	
	at hatching	0.0089		NS	Ewert, 1979	
	mm carapace:					
	118	0.33		Massachusetts	Graham & Perkins, 1976	
	127	0.44				
	134	0.53				
	167	1.03				
	192	1.51				
	220	2,362				
Egg Weight (g)			7 - 15	NS	Ernst & Barbour, 1972	
		11.1		northern New York	Petokas & Alexander, 1980	
		9.6		South Carolina	Congdon et al., 1986	
		9.3	5.7 - 13.8	New Jersey	Hotaling et al., 1985	
Body Length (mm carapace)	age in years			Michigan	Gibbons, 1968	
	1	62 ± 4.5 SD	54 - 66			
	2	102 ± 5.8 SD	83 - 108			
	3	137 ± 9.4 SD	124 - 145			
	4	168 ± 14.2 SD	146 - 184			
	5	198 ± 13.7 SD	177 - 211			
	6	222 ± 12.9 SD	204 - 238			

Snapping Turtle (*Chelydra serpentina*)

Factors	Age/Sex/ Cond./Seas.	Mean	Range or (95% CI of mean)	Location	Reference	Note No.
Metabolic Rate (lO_2/kg-d)	7.18 kg, rest 25°C	2.54			Lynn & von Brand, 1945	1
Metabolic Rate (kcal/kg-d)	A F basal A M basal	3.2 3.0			estimated	2
Food Ingestion Rate (g/g-d)	B summer		0.01 - 0.016	New York/captivity	Kiviat, 1980	

Dietary Composition	Spring	Summer	Fall	Winter			Note No.
adults & juveniles: plants animals		 35 - 70 6 - 35			location not specified (% of diet; measure NS)	Smith, 1956	3
adults: fish vegetation clams mud & rocks		 83.7 13.6 0.2 2.5			Tennessee/embayment (% wet volume; gastro-intestinal tract contents)	Meyers-Schoene & Walton, 1990	
adults & juveniles: (plants) algae (animals) crayfish fiddler crab sucker bullhead sunfish unknown fish (miscellaneous)		 (36.5) 12.8 (54.1) 8.9 2.7 3.2 6.3 7.5 12.4 (9.4)			Connecticut/lakes, ponds, streams, swamps (% wet volume; stomach contents)	Alexander, 1943	

Snapping Turtle (*Chelydra serpentina*)

Population Dynamics	Age/Sex/ Cond./Seas.	Mean	Range or (95% CI of mean)	Location/Habitat	Reference	Note No.
Home Range Size (ha)	A M summer	0.7 ± 0.29 SD	0.24 - 1.3	Ontario, Canada/lake	Galbraith et al., 1987	
	A F summer	3.79 ± 1.46 SD	2.5 - 5.19	Ontario, Canada/lake	Obbard & Brooks, 1981	
	A M summer	3.21 ± 2.67 SD	0.95 - 8.38			
	A B summer	3.44 ± 2.18 SD				
	A M	8.9		New York/fresh tidal wetland	Kiviat, 1980	
	A F nonbreed	7.2				
Population Density (N/ha)	A M summer	1.5		Ontario, Canada/ oligotrophic lake	Galbraith et al., 1987	
	B B summer	2.3 ± 1.45 SD	1.0 - 4.9	oligotrophic waters	Galbraith et al., 1988	4
	B B summer	60.4	40.3 - 95.0	eutrophic pond	Galbraith et al., 1988	
	B B summer	29.3 ± 27.6 SD	4.4 - 65.9	eutrophic ponds (other studies)	Galbraith et al., 1988	5
	A B summer	59		Tennessee/pond	Froese & Burghardt, 1975	
Clutch Size		49.0	31 - 87	South Dakota/marsh	Hammer, 1969	
		27.9 ± 0.76 SE	12 - 41	se Michigan/NS	Congdon et al., 1987	
		16.6 ± 1.6 SD	14 - 20	Florida/NS	Iverson, 1977	6
Clutches/Year		> 1	1 - 2	Indiana/NS	Minton, 1972	7
				NS/summarizing other studies	Ernst & Barbour, 1972	
Days Incubation		105	90 - 119	Ontario, Canada/lake	Obbard & Brooks, 1981	
			67 - 73	se Wisconsin/NS	Ewert, 1979	
Age at Sexual Maturity (yr)	F nesting	6 - 8		New York/NS	Pell, 1941	8
	F nesting	9 - 10		Iowa/NS	Christiansen & Burken, 1979	
	M	4 - 5				
	F nesting	17 - 19	at least 14 to 15	Ontario, Canada/riverine, mixed forest	Galbraith et al., 1989	

Snapping Turtle (*Chelydra serpentina*)

Population Dynamics	Age/Sex/ Cond./Seas.	Mean	Range or (95% CI of mean)	Location/Habitat	Reference	Note No.
Length at Sexual Maturity	A B	200 mm carapace		Quebec, Canada/NS	Mosimann & Bider, 1960	
	A B	145 mm plastron		Tennessee/NS	White & Murphy, 1973	9
Annual Mortality Rates (%)	A B		3 - 7	NS/NS	Galbraith & Brooks, 1987	10
Longevity (yr)			at least 24	Michigan/marsh	Gibbons, 1987	
			at least 19	South Carolina/river	Gibbons, 1987	
Seasonal Activity	**Begin**	**Peak**	**End**	**Location**		**Note No.**
Mating	April	June	November	depends on latitude	Ernst & Barbour, 1972	
	early June	mid-June	end of June	New York	Kiviat, 1980	
	mid-June			Florida	Punzo, 1975	
Nesting	May	June	September	depends on latitude	Ernst & Barbour, 1972	
	late May	early to mid-June	late June	northern New York	Petokas & Alexander, 1980	
	early June	mid-June	end of June	South Dakota	Hammer, 1969	
Hatching	August		October	depends on latitude	Ernst & Barbour, 1972	
	late August	September	early October	se Michigan	Congdon et al., 1987	
Hibernation	October		March-May	depends on latitude	Ernst & Barbour, 1972	
	late September		mid-March	Iowa	Christiansen & Burken, 1979	
	mid-October		early May	Ontario, Canada	Obbard & Brooks, 1981	

1 Cited in Sievert et al. (1988).
2 Estimated assuming temperature of 20°C, using equation 3-50 (Robinson et al., 1983) and body weights from Congdon et al. (1986), after subtracting 30 percent of body weight to eliminate the weight of the shell (Hall, 1924). More information on estimating energy budgets for reptiles is provided in Congdon et al. (1982).
3 Method of estimating percent diet not specified.
4 Summary of six field studies, including the author's.
5 Summary of data from various authors for eleven eutrophic ponds.
6 Cited in Petokas and Alexander (1980).
7 Cited in Graves and Anderson (1987).

Snapping Turtle (*Chelydra serpentina*)

8 Cited in Galbraith et al. (1989).
9 Cited in Bury (1979).
10 Cited in Frazer et al. (1991).

References (including Appendix)

Alexander, M. M. (1943) Food habits of the snapping turtle in Connecticut. J. Wildl. Manage. 7: 278-282.

Barbour, R. W. (1950) The reptiles of Big Black Mountain, Harlan County, Kentucky. Copeia 1950: 100-107.

Bramble, D. M. (1973) Media dependent feeding in turtles. Am. Zool. 13: 1342.

Breckenridge, W. J. (1944) Reptiles and amphibians of Minnesota. Minneapolis, MN: University of Minnesota Press.

Budhabhatti, J.; Moll, E. O. (1988) Diet and activity patterns of the common snapping turtle, *Chelydra serpentina* (Linnaeus) at Chain O'Lakes State Park, Lake County, Illinois (abstract only). Bull. Ecol. Soc. Am. Suppl. 69: 86.

Bury, R. B. (1979) Population ecology of freshwater turtles. In: Harless, M.; Morlock, H., eds. Turtles: perspectives and research. Toronto, Canada: John Wiley and Sons, Inc.; pp. 571-602.

Bush, F. M. (1959) Foods of some Kentucky herptiles. Herpetologica 15: 73-77.

Cahn, A. R. (1937) The turtles of Illinois. Illinois Biol. Monogr. 35: 1-218.

Carr, A. F. (1952) Handbook of turtles. Ithaca, NY: Comstock.

Christiansen, J. L.; Burken, R. R. (1979) Growth and maturity of the snapping turtle (*Chelydra serpentina*) in Iowa. Herpetologica 35: 261-266.

Conant, R.; Collins, J. T. (1991) A field guide to reptiles and amphibians - eastern and central North America. Boston, MA: Houghton Mifflin Co.

Congdon, J. D.; Gibbons, J. W. (1985) Egg components and reproductive characteristics of turtles: relationships to body size. Herpetologica 41: 194-205.

Congdon, J. D.; Dunham, A. E.; Tinkle, D. W. (1982) Energy budgets and life histories of reptiles. In: Gans, C., ed. Biology of the reptilia. v. 13. New York, NY: Academic Press; pp. 233-271.

Congdon, J. D.; Greene, J. L.; Gibbons, J. W. (1986) Biomass of freshwater turtles: A geographic comparison. Am. Midl. Nat. 115: 165-173.

Congdon, J. D.; Tinkle, D. W.; Rosen, P. C. (1983) Egg components and utilization during development in aquatic turtles. Copeia 1983: 264-268.

Congdon, J. D.; Breitenbach, G. L.; van Loben Sels, R. C.; et al. (1987) Reproduction and nesting ecology of snapping turtles *(Chelydra serpentina)* in southeastern Michigan. Herpetologica 43: 39-54.

DeGraaf, R. M.; Rudis, D. D. (1983) Amphibians and reptiles of New England. Amherst, MA: University of Massachusetts Press; p. 42.

Ernst, C. H. (1968) A turtle's territory. Int. Turtle Tortoise Soc. J. 2: 9-34.

Ernst, C. H. (1971) Population dynamics and activity cycles of *Chrysemys picta* in southeastern Pennsylvania. J. Herpetol. 140: 191-200.

Ernst, C. H.; Barbour, R. W. (1972) Turtles of the United States. Lexington, KY: University Press of Kentucky.

Ewert, M. A. (1976) Nests, nesting and aerial basking of *Macroclemys* under natural conditions, and comparisons with *Chelydra* (Testudines: Chelydridae). Herpetologica 32: 150-156.

Ewert, M. A. (1979) The embryo and its egg: development and natural history. In: Harless, M.; Morlock, H., eds. Turtles: perspectives and research. Toronto, Canada: John Wiley and Sons, Inc.; pp. 333-413.

Frazer, N. B.; Gibbons, J. W.; Greene, J. L. (1991) Growth, survivorship and longevity of painted turtles *Chrysemys picta* in a southwestern Michigan marsh. Am. Midl. Nat. 125: 245-258.

Froese, A. D. (1978) Habitat preferences of the common snapping turtle, *Chelydra s. serpentina* (Reptilia, Testudines, Chelydridae). J. Herpetol. 12: 53-58.

Froese, A. D.; Burghardt, G. M. (1975) A dense natural population of the common snapping turtle (*Chelydra s. serpentina*). Herpetologica 31: 204-208.

Galbraith, D. A.; Brooks, R. J. (1987) Survivorship of adult females in a northern population of common snapping turtles, *Chelydra serpentina*. Can. J. Zool. 65: 1581-1586.

Galbraith, D. A.; Chandler, M. W.; Brooks, R. J. (1987) The fine structure of home ranges of male *Chelydra serpentina*: are snapping turtles territorial? Can. J. Zool. 65: 2623-2629.

Galbraith, D. A.; Bishop, C. A.; Brooks, R. J.; et al. (1988) Factors affecting the density of populations of common snapping turtles *(Chelydra serpentina serpentina)*. Can. J. Zool. 66: 1233-1240.

Galbraith, D. A.; Brooks, R. J.; Obbard, M. E. (1989) The influence of growth rate on age and body size at maturity in female snapping turtles (*Chelydra serpentina*). Copeia 1989: 896-904.

Gerholdt, J. E.; Oldfield, B. (1987) *Chelydra serpentina serpentina* (common snapping turtle), size. Herpetol. Rev. 18: 73.

Gibbons, J. W. (1968) Growth rates of the common snapping turtle, *Chelydra serpentina*, in a polluted river. Herpetologica 24: 266-267.

Gibbons, J. W. (1987) Why do turtles live so long? BioSci. 37: 262-269.

Graham, T. E.; Perkins, R. W. (1976) Growth of the common snapping turtle, *Chelydra s. serpentina*, in a polluted marsh. Bull. Md. Herpetol. Soc. 12: 123-125.

Graves, B. M.; Anderson, S. H. (1987) Habitat suitability index models: snapping turtle. U.S. Fish Wildl. Serv. Biol. Rep. 82(10.141); 18 pp.

Hall, F. G. (1924) The respiratory exchange in turtles. J. Metab. Res. 6: 393-401.

Hammer, D. A. (1969) Parameters of a marsh snapping turtle population, La-creek Refuge, South Dakota. J. Wildl. Manage. 33: 995-1005.

Hammer, D. A. (1971) The durable snapping turtle. Nat. Hist. 80: 59-65.

Hotaling, E. C.; Wilhoft, D. C.; McDowell, S. B. (1985) Egg position and weight of hatchling snapping turtles, *Chelydra serpentina*, in natural nests. J. Herp. 19: 534-536.

Hutchison, V. H. (1979) Thermoregulation. In: Harless, M.; Morlock, H., eds. Turtles: perspectives and research. Toronto, Canada: John Wiley and Sons, Inc.; pp. 207-227.

Iverson, J. B. (1977) Reproduction in freshwater and terrestrial turtles of north Florida. Herpetologica 33: 205-212.

Kiviat, E. (1980) A Hudson River tide-marsh snapping turtle population. In: Trans. Northeast. Sec. Wildl. Soc. 37th Northeast, Fish and Wildl. Conf.; April 27-30, 1980; Ellenville, NY; pp. 158-168.

Lagler, K. F. (1943) Food habits and economic relations of the turtles of Michigan with special reference to game management. Am. Midl. Nat. 29: 257-312.

Lagler, K. F.; Applegate, V. C. (1943) Relationship between the length and the weight in the snapping turtle *Chelydra serpentina* Linnaeus. Am. Nat. 77: 476-478.

Lonke, D. J.; Obbard, M. E. (1977) Tag success, dimensions, clutch size and nesting site fidelity for the snapping turtle, *Chelydra serpentina* (Reptilia, Testudines, Chelydridae), in Algonquin Park, Ontario, Canada. J. Herpetol. 11: 243-244.

Lynn, W. G.; von Brand, T. (1945) Studies on the oxygen consumption and water metabolism of turtle embryos. Biol. Bull. 88: 112-125.

Macnamara, C. (1919) Notes on turtles. Ottawa Natural. 32: 135.

Major, P. D. (1975) Density of snapping turtles, *Chelydra serpentina* in western West Virginia. Herpetologica 31: 332-335.

Meyers-Schone, L.; Walton, B. T. (1990) Comparison of two freshwater turtle species as monitors of environmental contamination. Oak Ridge, TN: Oak Ridge National Lab.; Environmental Sciences Division Publication No. 3454. ORNL/TM-11460.

Minton, S. A., Jr. (1972) Amphibians and reptiles of Indiana. Indianapolis, IN: Indiana Academy of Science.

Moll, E. O. (1979) Reproductive cycles and adaptations. In: Harless, M.; Morlock, H., eds. Turtles: perspectives and research. Toronto, Canada: John Wiley and Sons, Inc.; pp. 305-331.

Mosimann, J. E.; Bider, J. R. (1960) Variation, sexual dimorphism, and maturity in a Quebec population of the snapping turtle, *Chelydra serpentina*. Can. J. Zool. 38: 19-38.

Obbard, M. E. (1983) Population ecology of the common snapping turtle, *Chelydra serpentina*, in north-central Ontario [Ph.D. dissertation]. Guelph, Ontario Canada: University of Guelph.

Obbard, M. E.; Brooks, R. J. (1980) Nesting migrations of the snapping turtle (*Chelydra serpentina*). Herpetologica 36: 158-162.

Obbard, M. E.; Brooks, R. J. (1981) A radio-telemetry and mark-recapture study of activity in the common snapping turtle, *Chelydra serpentina*. Copeia 1981: 630-637.

Pearse, A. S. (1923) The abundance and migration of turtles. Ecology 4: 24-28.

Pell, S. M. (1940) Notes on the food habits of the common snapping turtle. Copeia 2: 131.

Pell, S. M. (1941) Notes on the habits of the common snapping turtle, *Chelydra serpentina* (Linn.) in central New York [master's thesis]. Ithaca, NY: Cornell University.

Petokas, P. J.; Alexander, M. M. (1980) The nesting of *Chelydra serpentina* in northern New York. J. Herpetol. 14: 239-244.

Punzo, F. (1975) Studies on the feeding behavior, diet, nesting habits and temperature relationships of *Chelydra serpentina osceola* (Chelonia: Chelydridae). J. Herp. 9: 207-210.

Robinson, R. W.; Peters, R. H.; Zimmermann, J. (1983) The effects of body size and temperature on metabolic rate of organisms. Can. J. Zool. 61: 281-288.

Sievert, L. M.; Sievert, G. A.; Cupp, P. V., Jr. (1988) Metabolic rate of feeding and fasting juvenile midland painted turtles, *Chrysemys picta marginata*. Comp. Biochem. Physiol. A Comp. Physiol. 90: 157-159.

Smith, H. M. (1956) Handbook of amphibians and reptiles of Kansas. Univ. Kansas Mus. Nat. Hist. Misc. Publ. 9; pp. 134-136.

Smith, P. W. (1961) The amphibians and reptiles of Illinois. Ill. Nat. Hist. Surv. Bull. 28: 118-120.

Toner, G. C. (1960) The snapping turtle. Can. Audubon 22:97-99.

White, J. B.; Murphy, G. G. (1973) The reproductive cycles and sexual dimorphism of the common snapping turtle, *Chelydra serpentina serpentina*. Herpetologica 29: 240-246.

Wilhoft, D. C.; del Baglivo, M. G.; del Baglivo, M. D. (1979) Observations of mammalian predation of snapping turtle nests (Reptilia, Testudines, Chelydridae). J. Herpetol. 13: 435-438.

Yntema, C. L. (1968) A series of stages in the embryonic development of *Chelydra serpentina*. J. Morphol. 125: 219-252.

Yntema, C. L. (1970) Observations on females and eggs of the common snapping turtle, *Chelydra serpentina*. Am. Midl. Nat. 84: 69-76.

Yntema, C. L. (1978) Incubation times for eggs of the turtle *Chelydra serpentina* (Testudines: Chelydridae) at various temperatures. Herpetologica 34: 274-277.

2.3.2. Painted Turtle (pond and marsh turtles)

Order *Testudines*, Family *Emydidae*. Pond and marsh turtles (i.e., sliders, cooters, red-bellied turtles, and painted turtles) are small to medium-sized semiaquatic turtles well known for basking in the sun. Painted turtles are the most widespread of these in North America, ranging across the continent.

Selected species

The painted turtle (*Chrysemys picta*) is largely aquatic, living in shallow-water habitats, and is among the most conspicuous of the basking turtles. There are four subspecies in the United States (only one reaching slightly into Canada), distinguished by color variations, body size, and range: *C. p. picta* (eastern painted turtle; 11.5 to 15.2 cm; range Nova Scotia to Alabama), *C. p. marginata* (midland painted turtle; 11.5 to 14 cm; range southern Quebec and southern Ontario to Tennessee), *C. p. dorsalis* (southern painted turtle; 10 to 12.5 cm; range southern Illinois to the Gulf), and *C. p. bellii* (western painted turtle; the largest of the subspecies, 9 to 18 cm; range southwest Ontario and Missouri to the Pacific Northwest) (Conant and Collins, 1991). *C. p. dorsalis* is the smallest subspecies and also one of the smallest emydid turtles in North America (Moll, 1973). Hybridization occurs between subspecies in areas where their ranges overlap (e.g., *bellii* × *marginata* hybrids may occur in areas of Michigan) (Snow, 1980).

Body size. Painted turtles are medium-sized turtles (10 to 18 cm). Males are smaller than females; adult males average from 170 to 190 g, whereas adult females average from 260 to 330 g in some populations (Congdon et al., 1986; Ernst 1971b). In general, the shell comprises approximately 30 percent of the total wet weight of turtles of this size (Hall, 1924). Frazer et al. (1991) estimated a relationship between plastron length (PL in mm) and age (t in years) for a population in Michigan in the 1980's using von Bertalanffy growth equations:

$$PL = 111.8(1 - 0.792e^{-0.184t}) \quad \text{for males, and}$$

$$PL = 152.2(1 - 0.852e^{-0.128t}) \quad \text{for females.}$$

Congdon et al. (1982) reported a relationship between plastron length (PL in mm) and body weight (Wt in grams) for painted turtles:

$$\log_e(Wt) = -6978 + 2.645 \log_e(PL).$$

Eggs weigh 4 to 6 g, and neonates retain a large yolk mass that they draw on for the first few months of life (Cagle, 1954).

Habitat. Painted turtle habitat requirements include soft and muddy bottoms, basking sites, and aquatic vegetation (Sexton, 1959). Painted turtles prefer slow-moving shallow water such as ponds, marshes, ditches, prairie sloughs, spring runs, canals, and occasionally brackish tidal marshes (Conant and Collins, 1991). They frequent areas with floating surface vegetation for feeding and for cover (Sexton, 1959). These areas tend to

be warmer than more open water, which is important in the early fall as temperatures begin to drop (Sexton, 1959). For winter hibernation or dormancy, painted turtles seek deeper water (Sexton, 1959). If outlying marsh areas are dry during the summer, the turtles may return to the more permanent bodies of water sooner (McAuliffe, 1978). Painted turtles sometimes inhabit stagnant and polluted water (Smith, 1956).

Food habits. Painted turtles are omnivorous. Depending on habitat and on age, painted turtles may consume predominantly vegetation or predominantly animal matter. Marchand (1942, cited in Mahmoud and Klicka, 1979) found in one population that juveniles consumed approximately 85 percent animal matter and 15 percent plant matter, whereas the adults were primarily herbivorous, consuming 88 percent plant matter and 12 percent insects and amphipods. Knight and Gibbons (1968) found oligochaets, cladocera, dragonfly nymphs, lepidopteran larvae, and tendipedid larvae and pupae to dominate the animal component of the diet and filamentous algae to dominate the plant component of the diet in a population living in a polluted river in Michigan. Adult painted turtles in a Pennsylvania population were found to consume only 40 percent plant matter (Ernst and Barbour, 1972), whereas in a Michigan marsh and elsewhere, painted turtles of all ages apparently consumed 95 to 100 percent plant matter (Cahn, 1937, cited in Smith, 1961; Gibbons, 1967). Some carrion also may be consumed (Mount, 1975).

Temperature regulation and daily activities. Painted turtles are diurnal and usually spend their nights sleeping submerged (Ernst, 1971c). During the day, they forage in the late morning and late afternoon and bask during the rest of the day (Ernst, 1971c). Active feeding does not occur until water temperatures approach 20°C, and these turtles are most active around 20.7 to 22.4°C (Ernst, 1972; Ernst and Barbour, 1972; Hutchinson, 1979). Basking is most frequent in the spring, summer, and fall, but occasionally painted turtles bask during warm spells in the winter (Ernst and Barbour, 1972). Sexton (1959) divided the annual activity cycle of painted turtles into five parts: (1) the prevernal, which begins with the final melting of winter ice and lasts until late March, or when the turtles begin to move in mass out of the hibernation ponds; (2) the vernal, from late March to late May, when the submerged aquatic plants important to the turtles grow to the surface of the water (the initiation of feeding and mating activities and the emergence of the hatchling turtles from the nests of the previous year also occur during this season); (3) the aestival, extending from June through August, when the turtles forage, grow, nest, and return to their winter hibernation ponds; (4) the autumnal, including September through November or when a permanent ice cover forms; and (5) the winter season, which lasts while the water is permanently covered with ice.

Hibernation. Most painted turtles become dormant during the colder months but will become active during warm periods in the winter (Ernst and Barbour, 1972). *C. picta* usually hibernates in muddy bottoms of ponds (DeGraaf and Rudis, 1983). Taylor and Nol (1989) found painted turtles overwintering in an Ontario pond in areas with a mean water depth of 0.32 m (range 0.2 to 0.48 m), mean sediment depth of 0.79 m (0.5 to 0.95 m), and mean sediment temperature of 4.1°C (3 to 6°C). During hibernation, painted turtles shift toward more anaerobic metabolism, supported by glycolysis of liver and skeletal muscle glycogen (Seymour, 1982). After emerging from hibernation, the turtles convert the accumulated lactate to glucose in the liver (using aerobic metabolism) (Seymour, 1982).

Breeding activities and social organization. Mating usually occurs in spring and summer but may continue into the fall (Ernst, 1971c; Gibbons, 1968a; Gist et al., 1990). Nesting occurs somewhat later (Cagle, 1954; Ernst and Barbour, 1972; Moll 1973). Eggs are often laid in high banks (DeGraaf and Rudis, 1983). The species does not appear to be territorial and can be found in large aggregations, particularly at favorite basking sites (Ernst, 1971c).

Home range and resources. In spring, as the winter ice melts, many painted turtles move away from the ponds in which they hibernated to more shallow ponds and marshes with surface vegetation (Sexton, 1959). Movements averaging 60 to 140 meters characterized one population in Michigan (Sexton, 1959). The summer home range includes the painted turtle's foraging areas and basking sites. Females find nesting sites on dry land outside of the foraging range; Congdon and Gatten (1989) found nests to average 60 meters from the edge of a foraging marsh. Females initiate nesting migrations during daylight hours, and most finish their nests before dark on the same day (Congdon and Gatten, 1989). In winter, painted turtles generally move back to the deeper ponds for hibernation (DeGraaf and Rudis, 1983).

Population density. Reported densities range from 11.1/ha in Saskatchewan (MacCulloch and Secoy, 1983) to 830/ha in Michigan marshes (Frazer et al., 1991). Accurate censuses are difficult, however (Bayless, 1975), and the distribution of painted turtles in summer is highly clumped, corresponding to the patches of floating aquatic vegetation (Sexton, 1959).

Population dynamics. Sexual maturity is attained in about 2 to 7 years, depending on the sex and size of the turtle and growing season (Christiansen and Moll, 1973; Ernst and Barbour, 1972). Males reach sexual maturity 1 to a few years earlier than females (Moll, 1973). Once sexual maturity is reached, growth of painted turtles slows or essentially ceases (Ernst and Barbour, 1972). Older, larger females tend to produce larger clutch sizes and larger eggs than younger, smaller females (Mitchell, 1985). In more southerly populations, painted turtles produce more clutches annually with fewer eggs each than in more northerly populations (Moll, 1973; Snow, 1980; Schwarzkopf and Brooks, 1986). Predation causes most nest losses, usually within the first 2 days after laying (Tinkle et al., 1981). The duration of the incubation period depends on soil temperature, and hatchlings may overwinter in the nest in more northerly populations (Gibbons and Nelson, 1978).

Similar species (from general references)

Many species of pond and marsh turtles can be found in similar habitats; however, there are important dietary differences among species that can affect exposure to environmental contaminants, as described below. Size is listed according to carapace length, which is longer than plastron length.

cooters

- The Florida cooter (*Pseudemys floridana*) is larger (23 to 33 cm) than the painted turtle. The *floridana* subspecies ranges from the coastal plain of

Virginia to eastern Texas and north in the Mississippi Valley to southern Illinois, while the *peninsularis* subspecies is restricted to the Florida peninsula. The Florida cooter resides in permanent bodies of water. In their first year, young cooters feed on both aquatic plant and animal life; later they become totally herbivorous.

- The river cooter (*Pseudemys concinna*), composed of five subspecies, also is larger (23 to 33 cm) than the painted turtle. It inhabits coastal plains ranging from southeastern Virginia to Georgia, southeast into Florida, west into Texas and New Mexico, and north in the Mississippi Valley to southern Illinois. It is chiefly a resident of streams and relatively large lakes. In their first year, young river cooters are omnivorous; the adults are almost entirely herbivorous.

- The Texas river cooter (*Pseudemys texana*) (18 to 25.5 cm) prefers rivers but can be found in smaller creeks and ditches. Its range is restricted to most of central and southeastern Texas.

red-bellied turtles

- The Florida red-bellied turtle (*Pseudemys nelsoni*) is larger (20 to 31 cm) than the painted turtle and has a range in the Florida peninsula and panhandle. It can be found basking on logs over fresh to moderately brackish water, and it prefers abundant submerged aquatic vegetation, its principal food.

- The Alabama red-bellied turtle (*Pseudemys alabamensis*) is larger (23 to 33 cm) than the painted turtle and is found only in the lower portion of the Mobile Bay drainage in Alabama. It prefers fresh to moderately brackish water with abundant aquatic vegetation, its principal food.

- The red-bellied turtle (*Pseudemys rubriventris*) is much larger (25 to 32 cm) than the painted turtle and is found in the mid-Atlantic states and eastern Massachusetts.

sliders

- The pond slider (*Trachemys scripta*) is similar in size or a little larger (12 to 20 cm) than the painted turtle and has three subspecies ranging from southeastern Virginia to northern Florida and west to New Mexico. During the first year, pond sliders are principally carnivorous; consuming aquatic insects, crustaceans, molluscs, and tadpoles. As they mature, sliders become herbivorous, consuming a wide variety of aquatic plants.

- The big bend slider (*Trachemys gaigeae*) (12 to 20 cm) is similar to the pond slider in size and habits. It is abundant locally in its limited range along the upper Rio Grande and some of its tributaries.

General references

Behler and King (1979); Conant and Collins (1991); Congdon et al. (1986); Ernst and Barbour (1972); Moll (1973); Sexton (1959).

Painted Turtle (*Chrysemys picta*)

Factors	Age/Sex/ Cond./Seas.	Mean	Range or (95% CI of mean)	Location (subspecies)	Reference	Note No.
Body Weight (g)	A F A M	266.5 ± 60.1 SD 189.1 ± 52.3 SD	83.5 - 450.3 102.0 - 274.5	Pennsylvania (*picta* x *marginata*)	Ernst, 1971b	
	A F A M J B	326.7 ± 4.95 SE 176.9 ± 1.92 SE 64.2 ± 1.59 SE		Michigan	Congdon et al., 1986	
	at hatching	3.7 ± 0.2 SD	3.5 - 3.9	central Virginia (*picta*)	Mitchell, 1985	
	at hatching	4.1 ± 0.61 SD		Iowa	Ratterman & Ackerman, 1989	
Body Length (mm plastron)	A F A M	157 ± 2.6 SE 132 ± 2.9 SE	136 - 185 96 - 155	Wisconsin (*bellii*)	Moll, 1973	
(mm plastron)	A F A M J B	125.1 ± 0.64 SE 99.9 ± 0.48 SE 65.0 ± 0.65 SE		Michigan	Congdon et al., 1986	
(mm carapace)	A F A M J B	134.2 ± 0.81 SE 109.7 ± 0.54 SE 71.5 ± 0.69 SE		Michigan	Congdon et al., 1986	
Egg Weight (g)	initial mass	6.17		Georgia (*dorsalis*)	Congdon & Gibbons, 1985	
	initial mass final mass	6.65 ± 0.67 SD 8.62 ± 1.06 SD		Iowa	Ratterman & Ackerman, 1989	
Growth Rate	J F - 1 yr J F - 2 to 3 yr J F - 4 to 5 yr J F - 6 to 7 yr A F - 8 to 12 yr A F - > 12 yr	35 mm/yr 19 - 20 mm/yr 12 mm/yr 8 - 10 mm/yr 3 - 6 mm/yr < 3 mm/yr		Quebec, Canada (*marginata*) (measured using plastron)	Christens & Bider, 1986	

Painted Turtle (*Chrysemys picta*)

Factors	Age/Sex/ Cond./Seas.	Mean	Range or (95% CI of mean)	Location (subspecies)	Reference	Note No.
Metabolic Rate (lO_2/kg-d)	adults; 25°C			North Carolina	Stockard & Gatten, 1983	1
	land, rest	0.73 ± 0.44 SD				
	water, swim	0.22 ± 0.32 SD				
	juv.; 25°C	0.39 ± 0.68 SD				
	feeding	5.06 ± 0.42 SE				
	1-day fast	3.44 ± 0.29 SE		NS (*marginata*)	Sievert et al., 1988	2
	10-day fast	1.98 ± 0.13 SE				
	19-day fast	1.57 ± 0.19 SE				
Metabolic Rate (kcal/d, averaged over 1 year)	J F - yr 1	0.06		Michigan (*marginata*)	Congdon et al., 1982	3
	J F - yr 3	0.30				
	J F - yr 5	0.53				
	J F - yr 7	0.77				
	A F - yr 9	1.12				
	A F - yr 11	1.23				
	A F - yr 13	1.28				
Food Ingestion Rate (g/g-d)						4
Water Ingestion Rate (g/g-d)	A B		up to 0.025	Wisconsin (*bellii*) (lab)	Trobec & Stanley, 1971	5
	A B summer	0.02	0.016 - 0.022	Pennsylvania (lab)	Ernst, 1972	6
Inhalation Rate (m^3/kg-d)	A B resting	0.0025 ±0.0005 SE		NS (lab)	Milsom & Chan, 1986	

Dietary Composition	Spring	Summer	Fall	Winter	Location/Habitat (measure)	Reference	Note No.
all ages: plants		> 95			Michigan/marsh (% wet weight; stomach contents)	Gibbons, 1967	

Painted Turtle (*Chrysemys picta*)

Dietary Composition	Spring	Summer	Fall	Winter	Location/Habitat (measure)	Reference	Note No.
all ages:					Michigan/polluted river	Knight & Gibbons, 1968	
plants	31.6	38.7					
animals	77.3	72.3			(% wet weight; stomach contents)		
Oligochaeta	-	30.0					
Cladocera	1.5	48.5					
Odonata nymphs	60.0	38.3					
Lepidoptera larvae	1.0	50.0					
Tendipedidae larva	30.8	7.7					
Tendipedidae pupae	36.7	10.0					
detritus	7.8	1.9					
adults:							
snails		12.1			Pennsylvania (*picta*)/NS	Ernst & Barbour, 1972	
amphipods		3.0					
crayfish		7.5			(% wet volume; stomach contents)		
insects		11.5					
fish		13.0					
other animals		14.1			season not specified		
algae		14.7					
vascular plants		24.1					
other plants		0.8					

Population Dynamics			Range or (95% CI of mean)			Note No.
Movements (m)	A B spring	63 - 144	up to 301	Michigan (*marginata*)/NS	Sexton, 1959	7
	A B summer	86 - 91	up to 300			
	A B fall	88 - 130	up to 336			
Population Density (N/ha)	B B summer	11.1		Saskatchewan, Canada (*bellii*)/river	MacCulloch & Secoy, 1983	
	B B		98 - 410	Michigan (*marginata*)/ponds, marsh	Sexton, 1959	
	B B	590	240 - 941	Pennsylvania/pond, marsh	Ernst, 1971c	
	B B	828		Michigan/lake, marsh	Frazer et al., 1991	

Painted Turtle (*Chrysemys picta*)

Population Dynamics	Age/Sex Cond./Seas.	Mean	Range or (95% CI of mean)	Location/Habitat	Reference	Note No.
Clutch Size		19.8	17 - 23	Saskatchewan, Canada (*bellii*)/creek	MacCulloch & Secoy, 1983	
		10.7	4 - 16	Wisconsin (*bellii*)/NS	Moll, 1973	
		7.6	2 - 11	Michigan (*marginata*)/NS	Congdon & Tinkle, 1982	
		4.8	2 - 9	Tennessee (*dorsalis* × *marginata*)/NS	Moll, 1973	
Clutches/Year		1 - 2	2	Ontario, Canada/NS	Schwarzkopf & Brooks, 1986	
		1 - 2	2	Michigan (*bellii* × *marginata*) /NS	Snow, 1980	
		> 2	3	Illinois (*bellii* × *marginata*) /kettle ponds	Moll, 1973	
		> 3	5	Tennessee, Louisiana (*dorsalis* and *d.* × *marginata*)/NS	Moll, 1973	
Days Incubation			65 - 80	se Pennsylvania/NS	Ernst, 1971c	
			60 - 65	se Wisconsin/NS (natural)	Ewert, 1979	
			72 - 99	nw Minnesota/NS (natural)	Ewert, 1979	
Age at Sexual Maturity (yr)	F	5 - 6		New Mexico (*bellii*)/NS	Christiansen & Moll, 1973	
	M	3				
	F	8		Wisconsin (*bellii*)/NS	Christiansen & Moll, 1973	
	M	4				
	F	6		Pennsylvania (*picta*)/NS	Ernst & Barbour, 1972	
	M	5				
	F	4 - 5		Tennessee (*dorsalis* x *marginata*)/NS	Moll, 1973	
	M	2 - 3				

Painted Turtle (*Chrysemys picta*)

Population Dynamics	Age/Sex Cond./Seas.	Mean	Range or (95% CI of mean)	Location/Habitat	Reference	Note No.
Length at Sexual Maturity (mm plastron)	M F	90 120 - 130		northern Michigan (*marginata*, *dorsalis*)/NS	Cagle, 1954	
	M F	70 120 - 125		southern Illinois (*marginata*, *dorsalis*)/NS	Cagle, 1954	
	M F	123 150	88 - 170 132 - 205	New Mexico (*bellii*)/NS	Christiansen & Moll, 1973	
Annual Mortality Rates (%)	A F A M		0 - 14 2 - 46	Saskatchewan, Canada, MI, NY, NE/NS	Zweifel, 1989	8
	A B J B	 54	4 - 6	Virginia/NS	Mitchell, 1988	8
Longevity	M F		up to 31 yrs up to 34 yrs	Michigan/marsh	Frazer et al., 1991	
Seasonal Activity			**End**			**Note No.**
Mating	late April March	 April - early May October	mid-June May	se Pennsylvania Michigan Ohio	Ernst, 1971c Gibbons, 1968a Gist et al., 1990	
Nesting	June June late May	 June	July July late June	se Pennsylvania Illinois, Kansas se Michigan (*marginata*)	Ernst, 1971c Smith, 1956, 1961 Tinkle et al., 1981	
Hatching	 September August	late summer	 spring September	se Michigan (*marginata*) Illinois (*marginata*) Kansas (*bellii*)	Tinkle et al., 1981 Cahn, 1937 Smith, 1956	 9
Hibernation	late October late October		late March April	se Michigan (*marginata*) Kansas (*bellii*)	Congdon et al., 1982 Smith, 1956	

Painted Turtle (*Chrysemys picta*)

1 Average mass of test animals resting on land and in water = 215 g (79 to 395 g) and of test animals swimming and measured for existence metabolism = 143 g (79 to 297 g).
2 Average weight of juvenile turtles = 7.7 g.
3 Based on an annual energy budget estimated by the authors assuming that females lay one clutch of eggs per year after their seventh year.
4 See Chapters 3 and 4 for approaches to estimating food ingestion rates from metabolic rate and diet.
5 Uptake of water by turtles held in tap water.
6 Measured as evaporative water loss.
7 Spring: from hibernation to other ponds; summer: back to hibernation ponds; fall: to deep-water areas for hibernation.
8 Cited in Frazer et al., 1991.
9 Cited in Smith, 1961.

References (including Appendix)

Bayless, L. E. (1975) Population parameters for *Chrysemys picta* in a New York pond. Am. Midl. Nat. 93: 168-176.

Behler, J. L.; King, F. W. (1979) The Audubon Society field guide to North American reptiles and amphibians. New York, NY: Alfred A. Knopf, Inc.

Blanchard, F. N. (1923) The amphibians and reptiles of Dickinson County, Iowa. Univ. Iowa Stud. Nat. Hist. 10: 19-26.

Breckenridge, W. J. (1944) Reptiles and amphibians of Minnesota. Minneapolis, MN: University of Minnesota Press.

Breitenbach, G. L.; Congdon, J. D.; van Loben Sels, R. C. (1984) Winter temperatures of *Chrysemys picta* nests in Michigan: effects on hatchling survival. Herpetologica 40: 76-81.

Bury, R. B. (1979) Population ecology of freshwater turtles. In: Harless, M.; Morlock, H., eds. Turtles: perspectives and research. Toronto, Canada: John Wiley and Sons, Inc.; pp. 571-602.

Cagle, F. R. (1954) Observations on the life cycles of painted turtles (Genus *Chrysemys*). Am. Midl. Nat. 52: 225-235.

Cahn, A. R. (1937) The turtles of Illinois. Illinois Biol. Monogr. 1-218.

Christens, E.; Bider, J. R. (1986) Reproductive ecology of the painted turtle (*Chrysemys picta marginata*) in southwestern Quebec. Can. J. Zool. 64: 914-920.

Christiansen, J. L.; Moll, E. O. (1973) Latitudinal reproductive variation within a single subspecies of painted turtle, *Chrysemys picta bellii*. Herpetologica 29: 152-163.

Conant, R.; Collins, J. T. (1991) A field guide to reptiles and amphibians - eastern and central North America. Boston, MA: Houghton Mifflin Co.

Congdon, J. D.; Gatten, R. E., Jr. (1989) Movements and energetics of nesting *Chrysemys picta*. Herpetologica 45: 94-100.

Congdon, J. D.; Gibbons, J. W. (1985) Egg components and reproductive characteristics of turtles: relationships to body size. Herpetologica 41: 194-205.

Congdon, J. D.; Tinkle, D. W. (1982) Reproductive energetics of painted turtle (*Chrysemys picta*). Herpetologica 38: 228-237.

Congdon, J. D.; Dunham, A. E.; Tinkle, D. W. (1982) Energy budgets and life histories of reptiles. In: Gans, C., ed. Biology of the reptilia: v. 13. New York, NY: Academic Press; pp. 233-271.

Congdon, J. D.; Greene, J. L.; Gibbons, J. W. (1986) Biomass of freshwater turtles: a geographic comparison. Am. Midl. Nat. 115: 165-173.

DeGraaf, R. M.; Rudis, D. D. (1983) Amphibians and reptiles of New England. Amherst, MA: University of Massachusetts Press.

Ernst, C. H. (1971a) Sexual cycles and maturity of the turtle, *Chrysemys picta*. Biol. Bull. 140: 191-200.

Ernst, C. H. (1971b) Growth of the painted turtle, *Chrysemys picta*, in southeastern Pennsylvania. Herpetologica 27: 135-141.

Ernst, C. J. (1971c) Population dynamics and activity cycles of *Chrysemys picta* in southeastern Pennsylvania. J. Herpetol. 5: 151-160.

Ernst, C. H. (1972) Temperature-activity relationship in the painted turtle, *Chrysemys picta*. Copeia 1972: 217-222.

Ernst, C. H.; Barbour, R. W. (1972) Turtles of the United States. Lexington, KY: University Press of Kentucky.

Ewert, M. A. (1979) The embryo and its egg: development and natural history. In: Harless, M.; Morlock, H., eds. Turtles: perspectives and research. Toronto, Canada: John Wiley and Sons, Inc.; pp. 333-413.

Frazer, N. B.; Gibbons, J. W.; Greene, J. L. (1991) Growth, survivorship and longevity of painted turtles *Chrysemys picta* in a southwestern Michigan marsh. Am. Midl. Nat. 125: 245-258.

Gemmell, D. J. (1970) Some observations on the nesting of the western painted turtle, *Chrysemys picta belli*, in northern Minnesota. Can. Field-Nat. 84: 308-309.

Gibbons, J. W. (1967) Variation in growth rates in three populations of the painted turtle, *Chrysemys picta*. Herpetologica 23: 296-303.

Gibbons, J. W. (1968a) Reproductive potential, activity and cycles in *Chrysemys picta*. Ecology 49: 399-409.

Gibbons, J. W. (1968b) Population structure and survivorship in the painted turtle, *Chrysemys picta*. Copeia 2: 260-268.

Gibbons, J. W. (1987) Why do turtles live so long? BioSci. 37: 262-269.

Gibbons, J. W.; Nelson, D. H. (1978) The evolutionary significance of delayed emergence from the nest by hatchling turtles. Evolution 32: 297-303.

Gist, D. H.; Michaelson, J. A.; Jones, J. M. (1990) Autumn mating in the painted turtle, *Chrysemys picta*. Herpetologica 46: 331-336.

Hall, F. G. (1924) The respiratory exchange in turtles. J. Metab. Res. 6: 393-401.

Hutchinson, V. H. (1979) Thermoregulation. In: Harless, M.; Morlock, H., eds. Turtles: perspectives and research. Toronto, Canada: John Wiley and Sons, Inc.; pp. 207-227.

Iverson, J. B. (1982) Biomass in turtle populations: a neglected subject. Oecologia (Berl.) 55: 69-76.

Knight, A. W.; Gibbons, J. W. (1968) Food of the painted turtle, *Chrysemys picta* in a polluted river. Am. Midl. Nat. 80: 558-562.

Lagler, K. F. (1943) Food habits and economic relations of the turtles of Michigan with special reference to game management. Am. Midl. Nat. 29: 257-312.

Legler, J. M. (1954) Nesting habits of the western painted turtle, *Chrysemys picta belli* Gray. Herpetologica 10: 137-144.

Lynn, W. G.; von Brand, T. (1945) Studies on the oxygen consumption and water metabolism of turtle embryos. Biol. Bull. 88: 112-125.

MacCulloch, R. D.; Secoy, D. M. (1983) Demography, growth, and food of western painted turtles, *Chrysemys picta bellii* (Gray), from southern Saskatchewan. Can. J. Zool. 61: 1499-1509.

Mahmoud, I. Y.; Klicka, J. (1979) Feeding, drinking, and excretion. In: Harless, M.; Morlock, H., eds. Turtles: perspectives and research. Toronto, Canada: John Wiley and Sons, Inc.; pp. 229-243.

Marchand, L. J. (1942) A contribution to a knowledge of the natural history of certain freshwater turtles [master's thesis]. Gainesville, FL: University of Florida.

McAuliffe, J. R. (1978) Seasonal migrational movements of a population of the western painted turtle (*Chrysemys picta bellii*) (reptilia, testudines, testudinidae). J. Herpetol. 12: 143-149.

Milsom, W. K.; Chan, P. (1986) The relationship between lung volume, respiratory drive and breathing pattern in the turtle, *Chrysemys picta*. J. Exp. Biol. 120: 233-247.

Mitchell, J. C. (1985) Female reproductive cycle and life history attributes in a Virginia population of painted turtles, *Chrysemys picta*. J. Herpetol. 19: 218-226.

Mitchell, J. C. (1988) Population ecology and life histories of the freshwater turtles *Chrysemys picta* and *Sternotherus odoratus* in an urban lake. Herpetol. Monogr. 2: 40-61.

Moll, E. O. (1973) Latitudinal and intersubspecific variation in reproduction of the painted turtle, *Chrysemys picta*. Herpetologica 29: 307-318.

Morlock, H.; Herrington, S.; Oldham, M. (1972) Weight loss during food deprivation in the eastern painted turtle, *Chrysemys picta picta*. Copeia 1972: 392-394.

Mount, R. H. (1975) The reptiles and amphibians of Alabama. Auburn, AL: Auburn University Agricultural Experiment Station.

Packard, G. C.; Packard, M. J.; Boardman, T. J.; et al. (1983) Influence of water exchanges by flexible-shelled eggs of painted turtles *Chrysemys picta* on metabolism and growth of embryos. Physiol. Zool. 56: 217-230.

Pearse, A. S. (1923) The abundance and migration of turtles. Ecology 4: 24-28.

Pope, C. H. (1939) Turtles of the United States and Canada. New York, NY: Alfred A. Knopf.

Powell, C. B. (1967) Female sexual cycles of *Chrysemys picta* and *Clemmys insculpta* in Nova Scotia. Can. Field-Nat. 81: 134-140.

Ratterman, R. J.; Ackerman, R. A. (1989) The water exchange and hydric microclimate of painted turtle (*Chrysemys pica*) eggs incubating in field nests. Physiol. Zool. 62: 1059-1079.

Ream, C. H. (1967) Some aspects of the ecology of painted turtles, Lake Mendota, Wisconsin [Ph.D. dissertation]. Madison, WI: University of Wisconsin.

Schwarzkopf, L.; Brooks, R. J. (1986) Annual variations in reproductive characteristics of painted turtles (*Chrysemys picta*). Can. J. Zool. 64: 1148-1151.

Sexton, O. J. (1959) Spatial and temporal movements of a population of the painted turtle, *Chrysemys picta marginata* (Agassiz). Ecol. Monogr. 29: 113-140.

Seymour, R. S. (1982) Physiological adaptations to aquatic life. In: Gans, C.; Pough, F. H., eds. Biology of the reptilia, physiology D; physiological ecology: v. 13. New York, NY: Academic Press; pp. 1-51.

Sievert, L. M.; Sievert, G. A.; Cupp, P. V., Jr. (1988) Metabolic rate of feeding and fasting juvenile midland painted turtles, *Chrysemys picta marginata*. Comp. Biochem. Physiol. A Comp. Physiol. 90: 157-159.

Smith, H. M. (1956) Handbook of amphibians and reptiles of Kansas. Univ. Kansas Mus. Nat. Hist. Misc. Publ. 9; 365 pp.

Smith, P. W. (1961) The amphibians and reptiles of Illinois. Ill. Nat. Hist. Surv. Bull. 28.

Snow, J. E. (1980) Second clutch laying by painted turtles. Copeia 1980: 534-536.

Snow, J. E. (1982) Predation on painted turtle nests: nest survival as a function of nest age. Can. J. Zool. 60: 3290-3292.

Stockard, M. E.; Gatten, R. E. (1983) Activity metabolism of painted turtles (*Chrysemys picta*). Copeia 1983: 214-221.

Taylor, G. M.; Nol, E. (1989) Movements and hibernation sites of overwintering painted turtles in southern Ontario. Can. J. Zool. 67: 1877-1881.

Tinkle, D. W.; Congdon, J. D.; Rosen, P. C. (1981) Nesting frequency and success: Implications for the demography of painted turtles. Ecology 62: 1426-1432.

Trobec, T. N.; Stanley, J. G. (1971) Uptake of ions and water by the painted turtle, *Chrysemys picta*. Copeia 1971: 537-542.

Wade, S. E.; Gifford, C. E. (1965) A preliminary study of the turtle population of a northern Indiana lake. Proc. Indiana Acad. Sci. 74: 371-374.

Wilbur, H. M. (1975a) The evolutionary and mathematical demography of the turtle *Chrysemys picta*. Ecology 56: 64-77.

Wilbur, H. M. (1975b) A growth model for the turtle *Chrysemys picta*. Copeia 1975: 337-343.

Zweifel, R. G. (1989) Long-term ecological studies on a population of painted turtles, *Chrysemys picta*, on Long Island, New York. Am. Mus. Novit. 2952: 1-55.

2.3.3. Eastern Box Turtle (box turtles)

Order *Testudines*, Family *Emydidae*. Box turtles are the most terrestrial of the Emydid turtles, having close-fitting shells that have allowed them to adapt well to terrestrial life. They are found throughout the eastern and central United States and into the southwest. They are omnivorous.

Selected species

The eastern box turtle (*Terrapene carolina carolina*) ranges from northeastern Massachusetts to Georgia, west to Michigan, Illinois, and Tennessee (Conant and Collins, 1991). There are four subspecies of *T. carolina*, all found within the eastern United States: *T. c. carolina* (above), *T. c. major* (Gulf Coast box turtle; the largest subspecies, restricted to the Gulf Coast), *T. c. triunguis* (three-toed box turtle; Missouri to south-central Alabama and Texas), and *T. c. bauri* (Florida box turtle; restricted to the Florida peninsula and keys) (Conant and Collins, 1991).

Body size. The eastern box turtle is small, with adults ranging from 11.5 to 15.2 cm in length (plastron) and approximately 300 to over 400 g. Hatchlings weigh approximately 8 to 10 g. Turtles continue to grow throughout their lives; however, their growth rate slows after reaching sexual maturity (Ernst and Barbour, 1972), and growth rings are no longer discernable after 18 to 20 years (Stickel, 1978). Body fat reserves in a Georgia population averaged 0.058 to 0.060 g of fat per gram of lean dry weight from spring through fall (Brisbin, 1972).

Habitat. Typical box turtle habitats include open woodlands, thickets, and well-drained but moist forested areas (Stickel, 1950), but occasionally pastures and marshy meadows are utilized (Ernst and Barbour, 1972). In areas with mixed woodlands and grasslands, box turtles use grassland areas in times of moderate temperatures and peak moisture conditions; otherwise, they tend to use the more moist forested habitats (Reagan, 1974). Many turtles are killed attempting to cross roads, and fragmentation of habitat by roads can severely reduce populations (DeGraaf and Rudis, 1983; Stickel, 1978).

Food habits. Adult *T. carolina* are omnivorous (Ernst and Barbour, 1972). When young, they are primarily carnivorous, but they become more herbivorous as they age and as growth slows (Ernst and Barbour, 1972). They consume a wide variety of animal material, including earthworms, slugs, snails, insects and their larvae (particularly grasshoppers, moths, and beetles), crayfish, frogs, toads, snakes, and carrion; they also consume vegetable matter, including leaves, grass, berries, fruits, and fungi (DeGraaf and Rudis, 1983). A high proportion of snails and slugs may comprise the animal matter in the diet (Barbour, 1950), and seeds can become an important component of the plant materials in the late summer and fall (Klimstra and Newsome, 1960).

Temperature regulation and daily activities. The species is diurnal and spends the night resting in a scooped depression or form that the turtle digs in the soil with its front feet (Ernst and Barbour, 1972; Stickel, 1950). *T. carolina* are most active in temperate,

humid weather (Stickel, 1950). In the summer, they avoid high temperatures during midday by resting under logs or leaf litter, in mammal burrows, or by congregating in mudholes (Smith, 1961; Stickel, 1950). In the hottest weather, they may enter shaded shallow pools for hours or days (Ernst and Barbour, 1972). In the cooler temperatures, they may restrict their foraging activities to midday (Stickel, 1950). In the laboratory, locomotion is maximal between 24 and 32°C (Adams et al., 1989). In the field, their mean active body temperature is approximately 26°C (Brattstrom, 1965, cited in Hutchinson, 1979).

Hibernation. In the northern parts of its range (northeastern Massachusetts, Michigan, Illinois), the eastern box turtle enters hibernation in late October or November and emerges in April. In Louisiana, Penn and Pottharst (1940, cited in Ernst and Barbour, 1972) found that *T. c. major* hibernated when temperatures fell below 65°F. To hibernate, the box turtle burrows into loose soil and debris or mud of ponds or stream bottoms. Congdon et al. (1989) found a South Carolina population of box turtles to occupy relatively shallow burrows (less than 4 cm) compared with those occupied by box turtles in colder regions (up to 46 cm). Dolbeer (1971) found hibernacula of box turtles in Tennessee to be under 15.5 cm of leaf litter and 5.8 cm of soil on average. In southern states, during rainy and warm periods, box turtles may become active again (Dolbeer, 1971). In Florida, the box turtle may be active all year (Ernst and Barbour, 1972).

Breeding activities and social organization. Box turtles are solitary except briefly during the mating season. Individuals restrict their activities to a foraging home range, but home ranges of different individuals can overlap substantially (Stickel, 1950). Mating usually occurs in the spring but may continue into fall, and eggs are laid in late spring and summer (Ernst and Barbour, 1972). The female digs a 3- to 4-inch cavity in sandy or loamy soil in which she deposits her eggs and then covers the nest with soil. Nests tend to be constructed several hundred meters from the female's foraging home range in the warmer and drier uplands (Stickel, 1989). The duration of incubation depends on soil temperatures, and sometimes hatchlings overwinter in the nest. The young are semiaquatic but seldom seen (Smith, 1956).

Home range and resources. Measures of the foraging home range for box turtles range from .5 ha to just over 5 ha (Dolbeer, 1969; Schwartz et al., 1984). A female may need to search for suitable nest site (e.g., slightly elevated sandy soils) (Ernst and Barbour, 1972) outside of her foraging home range (Stickel, 1950). Winter hibernacula tend to be within the foraging home range (Stickel, 1989).

Population density. Population density varies with habitat quality, but studies linking density to particular habitat characteristics are lacking. In some areas, population densities have declined steadily over the past several decades (Schwartz and Schwartz, 1974; Stickel, 1978). Some investigators attribute the decline to increasing habitat fragmentation and obstacles (e.g., highways) that prevent females from reaching or returning from appropriate nesting areas (Stickel, 1978; DeGraaf and Rudis, 1983).

Population dynamics. Sexual maturity is attained at about 4 or 5 years (Ernst and Barbour, 1972) to 5 to 10 years of age (Minton, 1972, cited in DeGraaf and Rudis, 1983). One to four clutches may be laid per year, depending on latitude (Oliver, 1955, cited in

Moll, 1979; Smith, 1961). Clutch size ranges from three to eight eggs, averaging three to four in some areas (Congdon and Gibbons, 1985; Ernst and Barbour, 1972; Smith, 1956). Juveniles generally comprise a small proportion of box turtle populations, for example, 18 to 25 percent in one population in Missouri (Schwartz and Schwartz, 1974) and 10 percent in a study in Maryland (Stickel, 1950). Some individual box turtles may live over 100 years (Graham and Hutchinson, 1969, cited in DeGraaf and Rudis, 1983; Oliver, 1955, cited in Auffenberg and Iverson, 1979).

Similar species (from general references)

- The ornate box turtle (*Terrapene ornata ornata*) and the desert box turtle (*Terrapene ornata luteola*) are similar in size and habits to the eastern box turtle. They occur in the western, midwestern, and southern midwestern states. Preferred habitats include open prairies, pastureland, open woodlands, and waterways in arid, sandy-soil terrains. The ornate box turtle and desert box turtle forage primarily on insects but also on berries and carrion.

General references

Behler and King (1979); Conant and Collins (1991); DeGraaf and Rudis (1983); Ernst and Barbour (1972); Stickel (1950).

Eastern Box Turtle (*Terrapene carolina*)

Factors	Age/Sex/ Cond./Seas.	Mean	Range or (95% CI of mean)	Location (subspecies)	Reference	Note No.
Body Weight (g)	A F fall	381 ± 29 SE		Georgia (*carolina*), captive	Brisbin, 1972	
	A M fall	398 ± 47 SE				
	A F spring	388 ± 29 SE		Georgia (*carolina*)	Brisbin, 1972	
	A M spring	369 ± 47 SE				
	A F	372		South Carolina	Congdon & Gibbons, 1985	
	at hatching	8.8		Florida (*major*)	Ewert, 1979	
		8.4		Indiana (*carolina*)	Ewert, 1979	
	2 months	21		Tennessee	Allard, 1948	1
	1.3 years	40				
	3.3 years	54				
Body Fat (g/g lean dry weight)	B fall	0.058 ± 0.014 SE		Georgia (*carolina*), captive	Brisbin, 1972	
	B spring	0.060 ± 0.016 SE				
	B summer	0.059 ± 0.006 SE				
Length	A F	129 mm plastron		South Carolina	Congdon & Gibbons, 1985	
	A		up to 198 mm	NS/NS	Oliver, 1955	2
	at hatching	28 mm carapace	carapace	NS/NS	Oliver, 1955	2
Egg Weight (g)		9.02 ± 0.17 SE		South Carolina	Congdon & Gibbons, 1985	
			6 - 11	NS/NS	Ernst & Barbour, 1972	
Metabolic Rate (kcal/kg-d)	A F basal	5.4			estimated	3
Food Ingestion Rate (g/g-d)						4

Eastern Box Turtle (*Terrapene carolina*)

Dietary Composition	Spring	Summer	Fall	Winter	Location (subspecies)/ Habitat (measure)	Reference	Note No.
snails		60			Kentucky (*carolina*)/ Cumberland Mountains	Barbour, 1950	
crayfish		15					
plants		12.5					
crickets		7.5			(% volume; stomach contents)		
unidentified seeds		5					
plant matter	35	39	20		Illinois (*carolina*)/forest, prairie	Klimstra & Newsome, 1960	
insects (adults)	18	12	12				
insects (larvae)	4	5	9				
seeds	8	16	33		(% wet volume; digestive tract)		
Gastropoda	18	6	8				
Isopoda	<1	5	3				
Diplopoda	3	2	5				
Decapoda	2	2	0				
Annelida	1	1	4				
mammals	2	<1	2				
reptiles	1	3	1				
birds	3	1	<1				

Population Dynamics			Range or (95% CI of mean)		Reference	Note No.
Home Range Size (ha)	summer	0.46		Tennessee (*carolina*)/ woodland	Dolbeer, 1969	5
	B M	1.2		Maryland (*carolina*)/ bottomland forest	Stickel, 1989	5
	B F	1.1				
	B M	5.2		Missouri (*triunguis*)/mixed woods, fields	Schwartz et al., 1984	5
	B F	5.1				
Population Density (N/ha)		2.8 - 3.6		Tennessee/woodland	Dolbeer, 1969	
		17 - 35		Maryland (*triunguis*)/forest	Schwartz et al., 1984	

Eastern Box Turtle (*Terrapene carolina*)

Population Dynamics	Age/Sex/ Cond./Seas.	Mean	Range or (95% CI of mean)	Location (subspecies)/Habitat	Reference	Note No.
Clutch Size		3.4 ± 0.3 SE 4	 2 - 7	South Carolina/NS Washington, DC/NS	Congdon & Gibbons, 1985 Smith, 1956	
Clutches/Year		 1	up to 4	Florida/NS Illinois/NS	Oliver, 1955 Smith, 1961	6
Days Incubation		 99	78 - 102 69 - 161	northwest Minnesota/(natural) Washington, DC/(natural)	Ewert, 1979 Ewing, 1933	 7
Age at Sexual Maturity (yr)	B B	4 - 5 5 - 10		NS/NS NS/NS	Ernst & Barbour, 1972 Minton, 1972	 8
Length at Sexual Maturity (mm carapace)	B		100 - 130	NS/NS	Oliver, 1955	2
Longevity (yr)		20	up to 80 up to 138	NS/NS captivity	Nichols, 1939a Oliver, 1955	8 2
Seasonal Activity			End			Note No.
Mating	June	spring	July	northern range ne Carolinas, Washington, DC	Ernst & Barbour, 1972 DeGraaf & Rudis, 1983; Smith, 1956	
	September August		October September	northern range ne Carolinas	Ernst & Barbour, 1972 DeGraaf & Rudis, 1983	
	November October		April April	northern range Missouri (*triunguis*)	Ernst & Barbour, 1972 Schwartz & Schwartz, 1974	

1 Cited in Ernst and Barbour (1972).
2 Cited in Auffenberg and Iverson (1979).
3 Estimated assuming temperature of 20°C, using Equation 3-50 (Robinson et al., 1983) and body weights of Brisbin (1972) after subtracting 30 percent of the body weight to eliminate the weight of the shell (Hall, 1924).
4 See Chapters 3 and 4 for methods of estimating ingestion rates from metabolic rate and diet.

5 Foraging home range; nest sites can be several hundred meters away from the foraging home range.
6 Cited in Moll (1979).
7 Cited in Ewert (1979).
8 Cited in DeGraaf and Rudis (1983).

References (including Appendix)

Adams, N. A.; Claussen, D. L.; Skillings, J. (1989) Effects of temperature on voluntary locomotion of the eastern box turtle, *Terrapene carolina carolina.* Copeia 4: 905-915.

Allard, H. A. (1935) The natural history of the box turtle. Sci. Monthly 41: 325-338.

Allard, H. A. (1948) The eastern box-turtle and its behavior, part 1. J. Tenn. Acad. Sci. 23: 307-321.

Auffenberg, W.; Iverson, J. G. (1979) Demography of terrestrial turtles. In: Harless, M.; Morlock, H., eds. Turtles: perspectives and research. Toronto, Canada: John Wiley and Sons; pp. 541-569.

Barbour, R. W. (1950) The reptiles of Big Black Mountain, Harlan County, Kentucky. Copeia 1950: 100-107.

Behler, J. L.; King, F. W. (1979) The Audubon Society field guide to North American reptiles and amphibians. New York, NY: Alfred A. Knopf, Inc.

Brattstrom, B. H. (1965) Body temperatures of reptiles. Am. Midl. Nat. 73: 376-422.

Breder, R. B. (1927) Turtle trailing: a new technique for studying the life habits of certain testudinata. Zoologica 9: 231-243.

Brisbin, I. L., Jr. (1972) Seasonal variations in the live weights and major body components of captive box turtles. Herpetologica 28: 70-75.

Bush, F. M. (1959) Foods of some Kentucky herptiles. Herpetologica 15: 73-77.

Cahn, A. R. (1937) The turtles of Illinois. Illinois Biol. Monogr. 1-218.

Carr, A. F. (1952) Handbook of turtles. Ithaca, NY: Comstock.

Conant, R.; Collins, J. T. (1991) A field guide to reptiles and amphibians: eastern/central North America. Boston, MA: Houghton Mifflin Co.

Congdon, J. D.; Gibbons, J. W. (1985) Egg components and reproductive characteristics of turtles: relationships to body size. Herpetologica 41: 194-205.

Congdon, J. D.; Gatten, R. E., Jr.; Morreale, S. J. (1989) Overwintering activity of box turtles (*Terrapene carolina*) in South Carolina. J. Herpetol. 23: 179-181.

DeGraaf, R. M.; Rudis, D. D. (1983) Box turtle. Amphibians and reptiles of New England. Amherst, MA: University of Massachusetts Press.

Dickson, J. D., III (1953) The private life of the box turtle. Everglades Nat. Hist. 1: 58-62.

Dodge, C. H.; Dimond, M. T.; Wunder, C. C. (1979) The influence of temperature on the incubation of box turtle eggs (abstract only). Am. Zool. 19: 981.

Dolbeer, R. A. (1969) Population density and home range size of the eastern box turtle (*Terrapene c. carolina*) in eastern Tennessee. A.S.B. Bull. 16: 49.

Dolbeer, R. A. (1971) Winter behavior of the eastern box turtle, *Terrapene c. carolina* L., in eastern Tennessee. Copeia 1971: 758-760.

Ernst, C. H.; Barbour, R. W. (1972) Turtles of the United States. Lexington, KY: University Press of Kentucky.

Ewert, M. A. (1979) The embryo and its egg: development and natural history. In: Harless, M.; Morlock, H., eds. Turtles: perspectives and research. Toronto, Canada: John Wiley and Sons, Inc.; pp. 333-413.

Ewing, H. E. (1933) Reproduction in the eastern box-turtle *Terrapene carolina carolina.* Copeia 1933: 95-96.

Graham, T. E.; Hutchinson, V. H. (1969) Centenarian box turtles. Int. Turtle Tortoise Soc. J. 3: 24-29.

Hall, F. G. (1924) The respiratory exchange in turtles. J. Metab. Res. 6: 393-401.

Hutchinson, V. H. (1979) Thermoregulation. In: Harless, M.; Morlock, H., eds. Turtles: perspectives and research. Toronto, Canada: John Wiley and Sons, Inc.; pp. 207-227.

Klimstra, W. D.; Newsome, F. (1960) Some observations on the food coactions of the common box turtle, *Terrapene c. carolina.* Ecology 41: 639-647.

Lynn, W. G.; von Brand, T. (1945) Studies on the oxygen consumption and water metabolism of turtle embryos. Biol. Bull. 88: 112-125.

Minton, S. A., Jr. (1972) Amphibians and reptiles of Indiana. Indianapolis, IN: Indiana Academy of Science.

Moll, E. O. (1979) Reproductive cycles and adaptations. In: Harless, M.; Morlock, H., eds. Turtles: perspectives and research. Toronto, Canada: John Wiley and Sons, Inc.; pp. 305-331.

Nichols, J. T. (1939a) Data on size, growth and age in the box turtle, *Terrapene carolina.* Copeia 1939: 14-20.

Nichols, J. T. (1939b) Range and homing of individual box turtles. Copeia 1939: 125-127.

Oliver, J. A. (1955) The natural history of North American amphibians and reptiles. Princeton, NJ: Van Nostrand Co.

Penn, G. H.; Pottharst, K. E. (1940) The reproduction and dormancy of *Terrapene major* in New Orleans. Herpetologica 2: 25-29.

Reagan, D. P. (1974) Habitat selection in the three-toed box turtle *Terrapene carolina triunguis*. Copeia 2: 512-527.

Robinson, R. W.; Peters, R. H.; Zimmermann, J. (1983) The effects of body size and temperature on metabolic rate of organisms. Can. J. Zool. 61: 281-288.

Rosenberger, R. C. (1972) Interesting facts about turtles. Int. Turtle Tortoise Soc. J. 6: 4-7.

Schwartz, C. W.; Schwartz, E. R. (1974) The three-toed box turtle in central Missouri: its population, home range, and movements. Missouri Dept. Conserv. Terr. Ser. No. 5; 28 pp.

Schwartz, E. R.; Schwartz, C. W.; Kiester, A. R. (1984) The three-toed box turtle in central Missouri, part II: a nineteen-year study of home range, movements and population. Missouri Dept. Conserv. Terr. Ser. No. 12; 29 pp.

Smith, H. M. (1956) Handbook of amphibians and reptiles of Kansas. Univ. Kansas Mus. Nat. Hist. Misc. Publ. 9.

Smith, P. W. (1961) The amphibians and reptiles of Illinois. Ill. Nat. Hist. Surv. Bull. 28: 118-120.

Stickel, L. F. (1950) Population and home range relationships of the box turtle, *Terrapene c. carolina* (Linnaeus). Ecol. Monogr. 20: 351-378.

Stickel, L. F. (1978) Changes in a box turtle population during three decades. Copeia 1978: 221-225.

Stickel, L. F. (1989) Home range behavior among box turtles (*Terrapene c. carolina*) of a bottomland forest in Maryland. J. Herpetol. 23: 40-44.

Stickel, L. F.; Bunck, C. M. (1989) Growth and morphometrics of the box turtle, *Terrapene c. carolina*. J. Herpetol. 23: 216-223.

Strang, C. A. (1983) Spatial and temporal activity patterns in two terrestrial turtles. J. Herpetol. 17: 43-47.

2.3.4. Racer (and whipsnakes)

Order *Squamata*, Family *Colubridae*. All racer snakes (*Coluber constrictor*) and whipsnakes (*Masticophis*) belong to the family *Colubridae*, along with 84 percent of the snake species in North America. Colubrids vary widely in form and size and can be found in numerous terrestrial and aquatic habitats. The more terrestrial members of this family also include some brown and garter snakes; lined snakes; earth snakes; hognose snakes; small woodland snakes; green snakes; speckled racer and indigo snakes; rat snakes; glossy snakes; pine, bull, and gopher snakes; kingsnakes and milk snakes; scarlet, long-nosed, and short-tailed snakes; ground snakes; rear-fanged snakes; and crowned and black-headed snakes (Conant and Collins, 1991).

Selected species

Racer snakes (*Coluber constrictor*) are slender and fast moving and are found in a wide variety of terrestrial habitats. They are one of the most common large snakes in North America (Smith, 1961). There are 11 subspecies in North America, limited to the United States and Mexico: *C. c. constrictor* (northern black racer; southern Maine to northeastern Alabama), *C. c. flaviventris* (eastern yellowbelly racer; Montana, western North Dakota, and Iowa south to Texas), *C. c. foxii* (blue racer; northwest Ohio to eastern Iowa and southeast Minnesota), *C. c. anthicus* (buttermilk racer; south Arkansas, Louisiana, and east Texas), *C. c. etheridgei* (tan racer; west-central Louisiana and adjacent Texas), *C. c. helvigularis* (brownchin racer; lower Chipola and Apalachicola River Valleys in Florida panhandle and adjacent Georgia), *C. c. latrunculus* (blackmask racer; southeast Louisiana along east side of Mississippi River to northern Mississippi), *C. c. mormon* (western yellow-bellied racer; south British Colombia to Baja California, east to southwest Montana, western Wyoming, and western Colorado), *C. c. oaxaca* (Mexican racer; south Texas and Mexico), *C. c. paludicola* (Everglades racer; southern Florida Everglades region and Cape Canaveral area), and *C. c. priapus* (southern black racer; southeastern states and north and west in Mississippi Valley).

Body size. Adult racer snakes are usually 76 to 152 cm in total length (Conant and Collins, 1991). Brown and Parker (1984) developed an empirical relationship between snout-to-vent length (SVL)[i] and body weight for male and female racers of the *mormon* subspecies in northern Utah:

weight (g) = -100.80 + 2.93 SVL (cm) females,[j] and

weight (g) = -82.65 + 2.57 SVL (cm) males.

The equations apply only over a limited range of body sizes (40 to 70 cm) where the relationship is approximately linear instead of exponential. Kaufman and Gibbons (1975)

---

[i]Measures of SVL exclude the tail. Fitch (1963) estimated that the tail measures 28 percent of the SVL of young females and 31 percent of the SVL of young males.
[j]Females collected when nonreproductive.

determined a relationship between length and weight for both sexes of a South Carolina population:

$$\text{weight (g)} = 0.0003\ \text{SVL (cm)}^{2.97\ (\pm\ 0.15\ 2SE)} \quad \text{both sexes.}^{k}$$

Racers from populations in the northeastern United States tend to be the largest, while those from the far west and south Texas are the smallest (Fitch, 1963). Just prior to egg-laying, the eggs can account for over 40 percent of a gravid female's body weight (Brown and Parker, 1984). At hatching, racers weigh about 8 or 9 g. Weight gain during the first year is rapid, with both sexes increasing their weight after hatching by approximately 3.2 times in the first year (Brown and Parker, 1984). One-year-old females nearly double their weight during their second year (Brown and Parker, 1984). By the time females are 3 years old (when most reach sexual maturity), they are 1.3 times heavier than the males (Brown and Parker, 1984).

Habitat. Racers can be found in moist or dry areas, abandoned fields, open woodlands, mountain meadows, rocky wooded hillsides, grassy-bordered streams, pine flatwoods, roadsides, and marshes from sea level to 2,150 m in elevation (Behler and King, 1979). Racers are partially arboreal (Behler and King, 1979; DeGraaf and Rudis, 1983). *C. c. constrictor* seems to prefer forest edges and open grassy, shrubby areas (Fitch, 1963, 1982). In autumn, most *C. constrictor* move into woodlands to find rock crevices in which to overwinter (Fitch, 1982).

Food habits. Racers are foraging generalists that actively seek their prey. Their varied diet includes small mammals (e.g., mice, voles), insects, amphibians (especially frogs), small birds, birds' eggs, snakes, and lizards (Brown and Parker, 1982; Fitch, 1963; Klimstra, 1959). In early spring, *C.c. flaviventris* feeds primarily on mammals and from May to October feeds primarily on insects (Klimstra, 1959). They often capture new prey before fully digesting previously captured prey (Fitch, 1982). Females, which are larger than males, tend to consume a higher proportion of vertebrate prey than do the males (Fitch, 1982). Males tend to spend more time climbing among foliage in low shrubs and trees and consuming insects (Fitch, 1982).

Temperature regulation and daily activities. C. constrictor is diurnal and spends a good portion of the daylight hours foraging (Vermersch and Kuntz, 1986). The species is fast moving and may be encountered in almost any terrestrial situation (Fitch, 1982). Hammerson (1987) observed California racers to bask in the sun after emerging from their night burrows or crevices until their internal body temperature reached almost 34°C, after which they would begin actively foraging. When temperatures are moderate, racers will spend much of their time during the day in the open above ground; at high temperatures, racers may retreat underground (Brown and Parker, 1982). Although racers are good climbers, they spend most of their time on the ground (Behler and King, 1979). When searching for food or being pursued, the racer snake will not hesitate to climb or swim (Smith, 1961).

---

[k]95 percent confidence interval for constant (intercept in log-transform regression) = 0.00015 to 0.00058.

Hibernation. In fall, racers move to their hibernacula fairly directly and begin hibernation soon thereafter (Brown and Parker, 1982; Fitch, 1963). Racers hibernate in congregations of tens to hundreds of snakes (Brown and Parker, 1984), sometimes with copperheads and rattlesnakes, often using deep rock crevices or abandoned woodchuck holes (Parker and Brown, 1973). They are among the earliest snakes to emerge from hibernation (DeGraaf and Rudis, 1983).

Breeding activities and social organization. The species breeds in the spring or early summer. Racers defend home territories (DeGraaf and Rudis, 1983; Smith, 1956). Eggs are laid in the summer in rotting wood, stumps, decaying vegetable matter, or loose soil and hatch about 2 months later (Behler and King, 1979; DeGraaf and Rudis, 1983). More than one male may mate with one female in a breeding season. Eggs may double in size before hatching by absorbing water from the surrounding soil (Fitch, 1963).

Home range and resources. C. c. constrictor appears to have a definite home range (Smith, 1956) and requires large tracts of mixed old fields and woodlands (M. Klemens, pers. comm., cited in DeGraaf and Rudis, 1983). Fitch (1963) described four types of movement depending on the season and activity: (1) those in areas where hibernation occurs (e.g., rocky ledges), (2) seasonal migration between hibernation and summer ranges during spring and fall, (3) daily activities within a home range during the active season, and (4) wandering movements during which the racer shifts its activities.

Population density. Population densities of between 0.3 and 7 active snakes per hectare have been recorded in different habitats and areas (Fitch, 1963; Turner, 1977). Data on population densities are limited due to the difficulty in accurately censusing snakes.

Population dynamics. Male racers can reach sexual maturity by 13 to 14 months, whereas females tend not to mature until 2 or 3 years of age (Behler and King, 1979; Brown and Parker, 1984). Adult females produce at most a single clutch each year (some may reproduce only in alternate years) (Fitch, 1963). In general, the number of eggs in a clutch is proportional to the size of the female and ranges from 4 to 30 eggs (Fitch, 1963). Incubation lasts approximately 40 days to 2 months, depending on temperature (Behler and King, 1979; Smith, 1956). Juvenile snakes suffer higher mortality rates (e.g., 80 percent) than adult snakes (e.g., 20 percent) (Brown and Parker, 1984).

Similar species (from general references)

- The eastern coachwhip (*Masticophis flagellum flagellum*) (black phase) is similar in size and ranges from North Carolina and south Florida to Texas, Oklahoma, and Kansas.

- The western coachwhip (*Masticophis flagellum testaceus*) is similar in size to the racer. It ranges from western Nebraska south to Mexico.

- The central Texas whipsnake (*Masticophis taeniatus girardi*), Schott's whipsnake (*Masticophis taeniatus schotti*), and Ruthven's whipsnake

(*Masticophis taeniatus ruthveni*) are all similar in size to the racer and are restricted to southern Texas and northern Mexico.

- The Sonora whipsnake (*Masticophis bilineatus*) can be slightly larger (76 to 170 cm) than the racer and is found from Arizona southwest to New Mexico and Mexico.

- The striped racer (*Masticophis lateralis*) is also similar in size to the racer snake. It ranges from south-central Washington southeast in Great Basin to southern New Mexico and western and central Texas, south to west-central Mexico.

- The desert striped whipsnake (*Masticophis taeniatus taeniatus*) is similar to the central Texas whipsnake. It ranges from northern Texas and northern California to Washington state.

General references

Behler and King (1979); Brown and Parker (1984); Conant and Collins (1991); DeGraaf and Rudis (1983); Fitch (1963).

Racer Snake (*Coluber constrictor*)

Factors	Age/Sex/ Cond./Seas.	Mean	Range or (95% CI of mean)	Location (subspecies)	Reference	Note No.
Body Weight (g)	males: yrs/mm SVL			Utah (*mormon*)	Brown & Parker, 1984	
	<1 266	8.3				
	1 420	27.0				
	2 486	41.0				
	3 520	49.1				
	4 541	53.4				
	5 564	60.4				
	6 573	61.2				
	females: yrs/mm SVL			Utah (*mormon*)	Brown & Parker, 1984	
	<1 272	8.8				
	1 430	28.4				
	2 524	51.6				
	3 575	66.2				
	4 599	71.4				
	5 620	79.4				
	6 632	84.0				
	males: yrs/mm SVL			Kansas (*flaviventris*)	Fitch, 1963	
	2 615	68.2				
	3 706	102.1				
	4 757	139.0				
	5 806	152.4				
	6 827	175.9				
	7 845	181.2				
	8 868	217.5				

Racer Snake (*Coluber constrictor*)

Factors	Age/Sex/ Cond./Seas.	Mean	Range or (95% CI of mean)	Location (subspecies)	Reference	Note No.
Body Weight (g) (continued)	females: yrs/mm SVL			Kansas (*flaviventris*)	Fitch, 1963	
	2 644	83.5				
	3 810	149.4				
	4 866	212.3				
	5 914	209.6				
	6 965	245.9				
	7 974	251.3				
	neonate 215 mm SVL	4.16	2.4 - 5.8	Kansas (*flaviventris*)	Fitch, 1963	
Egg Weight (g)	female size:			Kansas (*flaviventris*)	Fitch, 1963	
	892 mm SVL	5.5	4.4 - 6.0			
	773 mm SVL	4.9	4.4 - 5.2			
	size NS	7.8 ± 0.17 SE	5.9 - 10.8	Utah (*mormon*)	Brown & Parker, 1984	
Juvenile Growth Rate (g/d)	both sexes; 0 to 10 wks	0.116		Kansas (*flaviventris*)	Fitch, 1963	1
Body Temperature (°C)	A B summer	31.8 ± 0.20 SE	18.6 - 37.7	Utah (*mormon*)	Brown, 1973	2
	A B summer	26 - 27 (mode)	15.5 - 32.4	Kansas (*flaviventris*)	Fitch, 1963	
Metabolic Rate (kcal/kg-d)	M basal	6.78			estimated	3
	F basal	6.19				
Food Ingestion Rate (g/g-d)	B B: spring through fall	0.02		Kansas (*flaviventris*)	Fitch, 1982	4

Racer Snake (*Coluber constrictor*)

Dietary Composition	Spring	Summer	Fall	Winter	Location/Habitat (measure)	Reference	Note No.
insects	20	40	64		s Illinois/pastures, meadows	Klimstra, 1959	5
small mammals	62	27	21				
amphibians	5	13	3		(% volume; digestive tracts)		
reptiles	7	8	-				
birds	4	6	8				
other	2	6	4				
small mammals		65.7			Kansas (*flaviventris*)/ locations throughout state	Fitch, 1963	
orthopterans		14.3					
lizards		9.2					
snakes		4.2			(% wet weight; scats and stomach contents)		
misc. insects		1.9					
birds		3.5					
frogs		1.2					
mice		15.4			Kansas (*flaviventris*)/ woodland, grassland	Fitch, 1963	
orthopterans		4.6					
lizards		61.5					
frogs		12.6			(% wet weight; stomach contents)		
snakes		5.1					
crickets		0.8					

Population Dynamics	Age/Sex/ Cond./Seas.	Mean	Range or (95% CI of mean)	Location (subspecies)/ Habitat		Note No.
Home Range Size (ha)	A F summer	1.8		Kansas (*flaviventris*)/ woodland, grassland	Fitch, 1963	
	A M summer	3.0				
Population Density (N/ha)	A B summer	7.0		Kansas (*flaviventris*)/ upland prairie, weeds, grasses	Fitch, 1963	
	B B	0.32		Utah (*mormon*)/desert shrub	Brown & Parker, 1984	

Racer Snake (*Coluber constrictor*)

Population Dynamics	Age/Sex/ Cond./Seas.	Mean	Range or (95% CI of mean)	Location (subspecies)/ Habitat	Reference	Note No.
Clutch Size	average	16.8	7 - 31	NS (*constrictor*)/NS	Fitch, 1963	6
	average	12.6	7 - 21	NS (*priapus*)/NS	Fitch, 1963	6
	average	5.28 ± 0.24 SE	4 - 8	Utah (*mormon*)/desert shrub	Brown & Parker, 1984	
Clutches/Year		0.5	up to 1	Kansas (*flaviventris*)/ woodland, grassland	Fitch, 1963	
Days Incubation	summer	51	43 - 63	Kansas (*flaviventris*)/lab	Fitch, 1963	
	summer	45 - 50		Utah (*mormon*)/desert	Brown & Parker, 1984	
Age at Sexual Maturity	F M	2 - 3 years 13 - 14 months		Kansas (*flaviventris*)/ woodland, grassland	Fitch, 1963	
Annual Mortality Rates (%)	B 2 yrs B 3 - 6 yrs B 7 yrs	58 25 - 30 38		Kansas (*flaviventris*)/ woodland, grassland	Fitch, 1963	
Longevity (yr)	A B		up to 20	Utah (*mormon*)/cold desert shrub	Brown & Parker, 1982	
Seasonal Activity					Reference	Note No.
Mating	April	May	June	Kansas (*flaviventris*)	Fitch, 1963	
	May		early June	NS (*constrictor*)	DeGraaf & Rudis, 1983	
	April		May	Texas (*flaviventris*)	Vermersch and Kuntz, 1986	
Nesting	June		July	Virginia, Carolinas	Martof et al., 1980	
	June		early August	Texas (*flaviventris*)	Vermersch and Kuntz, 1986	
Hatching	late August		early September	Kansas (*flaviventris*)	Fitch, 1963	
		mid-late August		Utah (*mormon*)	Brown & Parker, 1982	

Racer Snake (*Coluber constrictor*)

Seasonal Activity	Begin	Peak	End	Location (subspecies)	Reference	Note No.
Hibernation	late November		early April	Kansas (*flaviventris*)	Fitch, 1963	
	early October		early May	Utah (*mormon*)	Brown & Parker, 1982	

1 Ten-week period from hatching to hibernation.
2 Active snakes under natural conditions; cited in Brown and Parker (1982).
3 Estimated assuming temperature of 20°C using Equation 3-50 (Robinson et al., 1983) and body weights of 3-year-old snakes from Fitch (1963).
4 Author estimated that the snakes eat approximately four times their body weight over the 213-day active season from spring through fall.
5 Size of snakes not specified; captured within the range of *C. c. flaviventris* and *C. c. priapus*.
6 Author summarizing own work and unspecified other studies.

References (including Appendix)

Behler, J. L.; King, F. W. (1979) The Audubon Society field guide to North American reptiles and amphibians. New York, NY: Alfred A. Knopf, Inc.

Brown, W. S. (1973) Ecology of the racer, *Coluber constrictor mormon* (Serprentes, Colubridae), in a cold temperate desert in northern Utah [Ph.D. dissertation]. Salt Lake City, UT: University of Utah.

Brown, W. S.; Parker, W. S. (1982) Niche dimensions and resource partitioning in a great basin desert snake community. U.S. Fish Wildl. Serv. Wildl. Res. Rep. 13: 59-81.

Brown, W. S.; Parker, W. S. (1984) Growth, reproduction and demography of the racer, *Coluber constrictor mormon*, in northern Utah. In: Seigel, R. A.; Hunt, L. E.; Knight, J. L.; et al., eds. Vertebrate ecology and systematics. Lawrence, KS: Museum of Natural History, The University of Kansas; pp. 13-40.

Conant, R.; Collins, J. T. (1991) A field guide to reptiles and amphibians: eastern/central North America. Boston, MA: Houghton Mifflin Co.

Corn, P. S.; Bury, R. B. (1986) Morphological variation and zoogeography of racers (*Coluber constrictor*) in the central Rocky mountains. Herpetologica 42: 258-264.

DeGraaf, R. M.; Rudis, D. D. (1983) Racer snake. Amphibians and reptiles of New England. Amherst, MA: University of Massachusetts Press; pp. 68.

Fitch, H. S. (1963) Natural history of the racer *Coluber constrictor*: v. 15. Lawrence, KS: University of Kansas Publications, Museum of Natural History; pp. 351-468.

Fitch, H. S. (1982) Resources of a snake community in prairie woodland habitat of northeastern Kansas. In: Scott, N. J., Jr., ed. Herpetological communities. U.S. Fish Wildl. Serv. Wildl. Res. Rep. 13; pp. 83-98.

Gibbons, J. W.; Semlitsch, R. D. (1991) Guide to the reptiles and amphibians of the Savannah River site. Athens, GA: The University of Georgia Press.

Hammerson, G. A. (1987) Thermal behaviour of the snake *Coluber constrictor* in west-central California. J. Therm. Biol. 12: 195-197.

Kaufman, G. A.; Gibbons, J. W. (1975) Weight-length relationship in thirteen species of snakes in the southeastern United States. Herpetologica 31: 31-37.

Klimstra, W. D. (1959) Foods of the racer, *Coluber constrictor*, in southern Illinois. Copeia 1959: 210-214.

Martof, B. S.; Palmer, W. M.; Bailey, J. R.; et al. (1980) Amphibians and reptiles of the Carolinas and Virginia. Chapel Hill, NC: University of North Carolina Press.

Parker, W. S.; Brown, W. S. (1973) Species composition and population changes in two complexes of snake hibernacula in northern Utah. Herpetologica 29: 319-326.

Pope, C. H. (1944) Amphibians and reptiles of the Chicago area. Chicago, IL: Chicago Natural History Museum Press.

Robinson, R. W.; Peters, R. H.; Zimmermann, J. (1983) The effects of body size and temperature on metabolic rate of organisms. Can. J. Zool. 61: 281-288.

Ruben, J. A. (1976) Aerobic and anaerobic metabolism during activity in snakes. J. Comp. Physiol. B: Metab. Transp. Funct. 109: 147-157.

Smith, H. M. (1956) Handbook of amphibians and reptiles of Kansas. Univ. Kansas Mus. Nat. Hist. Misc. Publ. 9; 356 pp.

Smith, P. W. (1961) The amphibians and reptiles of Illinois. Ill. Nat. Hist. Surv. Bull. 28.

Turner, F. B. (1977) The dynamics of populations of squamates, crocodilians and rhynchocephalians. In: Gans, C.; Tinkle, D. W., eds. Biology of the reptilia: v. 7. New York, NY: Academic Press; pp. 157-264.

Uhler, F. M.; Cottom, C.; Clarke, T. E. (1939) Food of snakes of the George Washington National Forest, Virginia. Trans. North Am. Nat. Resour. Wildl. Conf. No. 4; pp. 605-622.

Vermersch, T. G.; Kuntz, R. E. (1986) Snakes of south central Texas. Austin, TX: Eakin Press; pp. 18-19.

Wright, A. H.; Wright, A. A. (1957) Handbook of snakes: v. 2. Ithaca, NY: Comstock.

2.3.5. Northern Water Snake (water snakes and salt marsh snakes)

Order *Squamata*, Family *Colubridae*. Water snakes and salt marsh snakes (genus *Nerodia*) belong to the family *Colubridae*, along with 84 percent of the snake species in North America. Colubrids vary widely in form and size and can be found in numerous habitats, including terrestrial, arboreal, aquatic, and burrowing. The more aquatic types of snakes in this family include water snakes, salt marsh snakes, swamp snakes, brown snakes, and garter and ribbon snakes (Conant and Collins, 1991).

Selected species

The northern water snake (*Nerodia sipedon sipedon*) is largely aquatic and riparian. It ranges from Maine and southern Quebec to North Carolina. It also inhabits the uplands of western North Carolina and adjacent portions of Tennessee and Virginia, and its range extends west to eastern Colorado (Conant and Collins, 1991). Three additional subspecies are recognized, distinguished by range and habitat: *N. s. pleuralis* (midland water snake; ranges from Indiana to Oklahoma and the Gulf of Mexico and south of the mountains to the Carolinas, preferring fast-moving streams), *N. s. insularum* (Lake Erie water snake; inhabits islands of Put-in-Bay, Lake Erie), and *N. s. williamengelsi* (Carolina salt marsh water snake; inhabits the Outer Bank islands and mainland coast of Pamlico and Core sounds, North Carolina) (Behler and King, 1979; Conant and Collins, 1991).

Body size. The northern water snake is typically 61 to 107 cm in total length (Conant and Collins, 1991). Island populations of the species tend to be larger than mainland ones (King, 1986). King (1986) estimated the relationship between snout-to-vent length (SVL)[1] and body weight for Lake Erie water snakes (*N. s. insularum*):

$$\text{weight (g)} = 0.0005\ \text{SVL (cm)}^{3.07} \qquad \text{all snakes;}$$

$$\text{weight (g)} = 0.0009\ \text{SVL (cm)}^{2.88} \qquad \text{females; and}$$

$$\text{weight (g)} = 0.0008\ \text{SVL (cm)}^{2.98} \qquad \text{males.}$$

Kaufman and Gibbons (1975) determined a relationship between length and weight for both sexes of a South Carolina population:

$$\text{weight (g)} = 0.0004\ \text{SVL (cm)}^{3.15\ (\pm\ 0.12\ \text{SE})} \qquad \text{all snakes}$$

(95% CI for intercept = 0.00015 to 0.0011). Immediately after emergence from hibernation, females begin to gain weight and continue gaining weight until giving birth in late summer. Weight loss associated with parturition in one population ranged from 28.2 to 45.5 percent of the female's weight just prior to parturition (King, 1986).

---

[1]Measures of SVL exclude the tail. Kaufman and Gibbons (1975) estimated that the tail represents 21.8 percent (± 0.010 SE) of the total length of a female and 25.7 percent (± 0.006 SE) of the total length of a male.

Habitat. The northern water snake prefers streams but can be found in lakes and ponds and nearby riparian areas (King, 1986; Smith, 1961). In the Carolinas and Virginia, they can be found from mountain lakes and streams to large coastal estuaries (Martof et al., 1980). They are absent from water bodies with soft muddy bottoms which may interfere with foraging (Lagler and Salyer, 1945). In Lake Erie, *N. s. insularum* occurs in shoreline habitats where rocks or vegetation provide refugia (King, 1986).

Food habits. Northern water snakes consume primarily fish and amphibians and, to a lesser extent, insects and small mammals (Raney and Roecker, 1947; Smith, 1961). Diet varies according to the age (and size) of the snake and food availability (DeGraaf and Rudis, 1983). Young snakes forage in shallow riffles and cobble bars, primarily waiting for prey to move within range (letter from K.B. Jones, U.S. Environmental Protection Agency Environmental Monitoring Systems Laboratory, to Susan B. Norton, January 6, 1992). Tadpoles comprise a large proportion of the diet of young snakes[m] in some areas (Raney and Roecker, 1947). Adults are strong swimmers and can swim and dive for fish midstream, often capturing large specimens (e.g., 20 to 23 cm brown trout; 19 cm bullhead; 20+ cm lamprey) (Lagler and Salyer, 1945). They also tend to consume bottom-dwelling fish species (e.g., suckers) (Raney and Roecker, 1947). In New York, Brown (1958) found that *N. s. sipedon* consumed the most food between June and August; they consumed little during the remaining months prior to hibernation.

Temperature regulation and daily activities. The northern water snake is active both day and night but is most active between 21 and 27°C (Brown, 1958; Smith, 1961). During the day, they are found in areas that provide basking sites and are not found in heavily shaded areas (DeGraaf and Rudis, 1983; Lagler and Salyer, 1945). They may become inactive and seek shelter, however, if temperatures exceed 27°C (Brown, 1958; Lagler and Salyer, 1945). They become torpid at temperatures less than 10°C (Brown, 1958).

Hibernation. In autumn, the *N. sipedon* leaves the aquatic habitats to overwinter in rock crevices or in banks nearby (DeGraaf and Rudis, 1983; Fitch, 1982).

Breeding activities and social organization. The northern water snake breeds primarily in early spring, and the young are born from late summer to fall (i.e., viviparous) (DeGraaf and Rudis, 1983). The rate of development before hatching is temperature dependent (Bauman and Metter, 1977).

Home range and resources. The northern water snake usually stays in the same area of a stream, in the same pond, or in an adjacent pond for several years (Fraker, 1970). Snakes along streams have larger home ranges than snakes in ponds and lakes (Fraker, 1970). Fraker (1970) found that for large ponds (e.g., 1,500 to 2,000 m^2), the home range of an individual snake is essentially the entire pond. In fish hatcheries with smaller ponds, individual snakes frequent more than one pond (Fraker, 1970).

---

[m]Snakes less than 36 cm in length for this example.

Population density. Population density estimates for water snakes usually are expressed relative to a length of shoreline. Values from 34 to 380 snakes per km of shoreline have been reported for streams and Lake Erie islands (see table).

Population dynamics. Northern water snakes reach sexual maturity at 2 or 3 years of age, with males generally maturing earlier and at a smaller size than females (Feaver, 1977, cited in King, 1986; King, 1986). Clutch sizes vary from 5 or 10 to 50 or 60 depending on location and on female size (see table). The proportion of females breeding in a given year increases with increasing female size, as does clutch size and offspring weight (King, 1986). King determined the relationship of litter size to female SVL for Lake Erie water snakes (*N. s. insularum*):

litter size = -12.45 + 0.41 SVL (cm).

Feaver (1977, cited in King, 1986) determined the relationship for a Michigan population:

litter size = -23.55 + 0.55 SVL (cm).

Females produce only one clutch per year (Beatson, 1976). Information on annual survivorship of juveniles or adults was not identified in the literature reviewed.

Similar species (from general references)

- The Mississippi green water snake (*Nerodia cyclopion*) can be slightly larger (76 to 114 cm) than the northern water snake and is found in quiet waters of the Mississippi Valley.
- The blotched water snake (*Nerodia erythrogaster transversa*) is larger than the northern water snake (76 to 122 cm) and is found in western Missouri and Kansas to northeastern Mexico.
- The northern copperbelly (*Nerodia erythrogaster neglecta*) is larger than the northern water snake (76 to 122 cm) and ranges from western Kentucky to southeastern Illinois and to Michigan.
- The redbelly water snake (*Nerodia erythrogaster erythrogaster*) of the midwestern United States is close in size to the water snake. It is best suited to swampy areas and sluggish streams.
- The yellowbelly water snake (*Nerodia erythrogaster flavigaster*) is found in the lower Mississippi Valley and adjacent areas. Like the redbelly, it is similar in size to the water snake and likely to be found in swampy areas and sluggish streams.
- The banded water snake (*Nerodia fasciata fasciata*) is similar in size, and its range includes the coastal plain, North Carolina to Mississippi.

- The broad banded water snake (*Nerodia fasciata confluens*) (56 to 90 cm) occurs in the Mississippi River delta region in marshes, swamps, and shallow waters, including brackish waters along the Gulf Coast.

- The Florida water snake (*Nerodia fasciata pictiventris*) is similar in size to the northern water snake and ranges from the extreme southeast of Georgia to the southern tip of Florida. It lives primarily in shallow freshwater habitats.

- Harter's water snake (*Nerodia harteri*) is relatively small (51 to 76 cm) and is found in central Texas.

- The diamondback water snake (*Nerodi rhombifer rhombifer*) can be slightly longer (76 to 122 cm) than the northern water snake and is more thick-bodied than most *Nerodia.* Its range extends south from the Mississippi Valley into Mexico.

- The Gulf salt marsh snake (*Nerodia clarkii clarkii*) inhabits the Gulf Coast from west-central Florida to southern Texas. It is abundant in coastal salt meadows, swamps, and marshes.

- The Atlantic salt marsh snake (*Nerodia clarkii taeniata*) is restricted to Volusia County along the Atlantic Coast of north Florida.

- The mangrove salt marsh snake (*Nerodia clarkii compressicauda*) is small (38 to 76 cm) and inhabits the mangrove swamps of Florida's lower coasts.

Dietary differences are evident among these species. Mushinsky et al. (1982) found in Louisiana forested wetlands that *N. erythrogaster* and *N. fasciata* change from a diet of fish to one dominated by frogs when they exceed an SVL of 50 cm. *N. rhombifer* and *N. cyclopion*, on the other hand, consume primarily fish throughout their lives, although the species and size composition of their diet changes as they grow larger (Mushinsky et al., 1982). *As N. rhombifer* exceeds 80 cm SVL, it begins to prey upon larger fish that occupy deeper open-water habitats. *N. cyclopion* eats a larger proportion of centrarchid fish as its body size increases. In a study of the diet of *N. rhombifer*, Plummer and Goy (1984) found a relationship between the SVL of the snakes and the standard length (SL) of the fish prey (defined as 80 percent of total length):

SL_{fish} (cm) = -5.9 + 0.23 SVL_{snake} (cm) for males, and

SL_{fish} (cm) = -3.6 + 0.17 SVL_{snake} (cm) for females.

The regression lines are not significantly different, however.

General references

Behler and King (1979); Conant and Collins (1991); DeGraaf and Rudis (1983); King (1986).

Water Snake (*Nerodia sipedon*)

Factors	Age/Sex/ Cond./Seas.	Mean	Range or (95% CI of mean)	Location (subspecies)	Reference	Note No.
Body Weight (g)	A B	207	up to 480	Kansas	Fitch, 1982	
	J B 1 yr	7.0 ± 2.3 SD	5.3 - 10.4	New York (*sipedon*)	Brown, 1958	
	J B 2 yr	29.0 (N = 2)	25.2 - 32.7			
	J M 3 yr	53.2 (N = 1)				
	A B 5 - 6 yr	210.0 ± 65 SD	114 - 255			
	neonate B	4.8	3.6 - 6.6	Ohio, Ontario (*insularum*)	King, 1986	
Length (mm)	A M	620 SVL		Ohio, Ontario (*insularum*)	King, 1989	1
	A F	745 SVL				
	J B 1 yr	285 total		New York (*sipedon*)	Brown, 1958	2
	J B 2 yr	496 total				
	J M 3 yr	607 total				
	A B 5 - 6 yr	868 total				
	neonate	181 SVL	125 - 210 SVL	Ohio, Ontario (*insularum*)	King, 1986	1
Juvenile Growth Rate (g/d)	J 1 yr	0.18 ± 0.08 SD	0.13 - 0.27	New York (*sipedon*)	Brown, 1958	
	J 2 yr	0.42	0.40 - 0.45			
	J 3 yr	0.80				
Metabolic Rate (IO_2/kg-d)	B resting:			Oklahoma, *Nerodia rhombifera* (similar species)	Gratz & Hutchinson, 1977	
	15°C	0.607 ± 0.035 SE	0.39 - 0.94			
	25°C	3.29 ± 0.10 SE	2.81 - 4.44			
	35°C	7.33 ± 0.23 SE	5.70 - 9.99			
Food Ingestion Rate (g/g-d)	J B 1 yr	0.088		New York (*sipedon*)	Brown, 1958	3
	J B 2 yr	0.043				
	J M 3 yr	0.043				
	A B 5 - 6 yr	0.061				
Surface Area (cm^2)	155 mm SVL	131.16		Arkansas, *Nerodia rhombifera* (similar species)	Baeyens & Rountree, 1983	

Water Snake (*Nerodia sipedon*)

Dietary Composition	Spring	Summer	Fall	Winter	Location (subspecies)/ Habitat (measure)	Reference	Note No.
Esocidae		7.0			Georgia/aquatic (NS)	Camp et al., 1980	
Catostomidae		22.5					
Percidae		15.7			(% wet volume; stomach contents)		
Proteidae		51.9					
Cyprinidae		1.5					
Centrarchidae		0.3			season not specified		
crawfish		1.5					
trout		64			n lower Michigan/streams	Alexander, 1977	4
non-trout fish		7					
unidentified fish		1			(% wet weight; stomach contents)		
Crustacea		1					
Amphibia		14					
birds & mammals		12					
unidentified		1					
minnows			9.1		n lower Michigan/lakes	Brown, 1958	5
darters			1.4				
Amphibia			52.8		(% volume; stomach contents)		
sculpin (Cottidae)			2.2				
trout perch (Percopsis)			2.8				
game fishes (Perca)			14.1				
burbot (Lota)			17.4				
catfish (Ictaluridae)			0.3				

Population Dynamics	Age/Sex/ Cond./Seas.	Mean	Range		Reference	Note No.
Population Density (N/km shore)	A B	138	22 - 381	Ohio, Ontario (*insularum*)/ Lake Erie islands	King, 1986	
	B B summer	34 - 41		Kansas (*sipedon*)/stream	Beatson, 1976	

Water Snake (*Nerodia sipedon*)

Population Dynamics	Age/Sex/ Cond./Seas.	Mean	Range	Location (subspecies)/ Habitat	Reference	Note No.
Litter Size		11.8	4 - 24	Michigan (*sipedon*)/ponds, marshes	Feaver, 1977	6
		20.8 ± 8.2 SD	6 - 34	Ohio, Ontario (*insularum*)/ Lake Erie islands	Camin & Ehrlich, 1958	
		22.9	9 - 50	Ohio, Ontario (*insularum*)/ Lake Erie islands	King, 1986	
		33	13 - 52	Illinois (*pleuralis*)/NS	Smith, 1961	
Litters/Year		1		central Missouri (*sipedon*)/fish hatchery	Bauman & Metter, 1977	
		1		Kansas (*sipedon*)/stream	Beatson, 1976	
Days Gestation		58		central Missouri (*sipedon*)/fish hatchery	Bauman & Metter, 1977	
Age at Sexual Maturity (d)	F M	34 mo 23 - 24 mo		Michigan (*sipedon*)/ponds, marshes	Feaver, 1977	6
	F M	3 yrs 2 yrs		Ohio, Ontario (*insularum*)/ Lake Erie islands	King, 1986	
Length at Sexual Maturity (mm SVL)	F M		476 - 649 375 - 425	Michigan (*sipedon*)/ponds, marshes	Feaver, 1977	6
	F M	590 430		Ohio, Ontario (*insularum*)/ Lake Erie islands	King, 1986	
Seasonal Activity			End		Reference	Note No.
Mating	mid-May	April - May May	mid-June	Kansas (*sipedon*) Michigan (*sipedon*) central Missouri (*sipedon*)	Smith, 1956 Feaver, 1977 Bauman & Metter, 1977	6

Water Snake (*Nerodia sipedon*)

Seasonal Activity	Begin	Peak	End	Location (subspecies)	Reference	Note No.
Parturition	late August mid-August	 late summer	September late September	Illinois (*sipedon*) Ohio, Ontario (*insularum*) Virginia, Carolinas (*sipedon*)	Smith, 1961 King, 1986 Martof et al., 1980	
	mid-October November		mid-April late March	Ohio, Ontario (*insularum*) Michigan (*sipedon*)	King, 1986 Feaver, 1977	 6

1 SVL = snout-to-vent length, which excludes the tail beyond the vent.
2 Total = total length, from nose to tip of tail.
3 Snakes in captivity; mean temperatures = 23°C. Snakes fed fish (one fed frogs).
4 Collected whenever they were found; thought to be active in area from May to September.
5 Months of collection and size of snakes not specified.
6 Cited in King (1986).

References (including Appendix)

Aldridge, R. D. (1982) The ovarian cycle of the water snake, *Nerodia sipedon*, and effects of hypophysectomy and gonadotropin administration. Herpetologica 38: 71-79.

Alexander, G. (1977) Food of vertebrate predators on trout waters in north central lower Michigan. Michigan Academician 10: 181-195.

Baeyens, D. A.; Rountree, R. L. (1983) A comparative study of evaporative water loss and epidermal permeability in an arboreal snake, *Opheodrys aestivus*, and a semi-aquatic snake, *Nerodia rhombifera*. Comp. Biochem. Physiol. 76A: 301-304.

Barbour, R. W. (1950) The reptiles of Big Black Mountain, Harlan County, Kentucky. Copeia 1950: 100-107.

Bauman, M. A.; Metter, D. E. (1977) Reproductive cycle of the northern watersnake *Natrix s. sipedon* (Reptilia. Serpentes, Colubridae). J. Herpetol. 11: 51-59.

Beatson, R. R. (1976) Environmental and genetical correlates of disruptive coloration in the water snake, *Natrix s. sipedon*. Evolution 30: 241-252.

Behler, J. L.; King, F. W. (1979) The Audubon Society field guide to North American reptiles and amphibians. New York: Alfred A. Knopf, Inc.

Brown, E. E. (1958) Feeding habits of the northern water snake, *Natrix sipedon sipedon* Linnaeus. Zoologica (N.Y.) 43: 55-71.

Bush, F. M. (1959) Foods of some Kentucky herptiles. Herpetologica 15: 73-77.

Camin, J. H.; Ehrlich, P. R. (1958) Natural selection in water snakes (*Natrix sipedon* L.) on islands in Lake Erie. Evolution 12: 504-511.

Camp, C. D.; Sprewell, W. D.; Powders, V. N. (1980) Feeding habits of *Nerodia taxispilota* with comparative notes on the foods of sympatric congeners in Georgia. J. Herpetol. 14: 301-304.

Conant, R.; Collins, J. T. (1991) A field guide to reptiles and amphibians: eastern/central North America. Boston, MA: Houghton Mifflin Co.

DeGraaf, R. M.; Rudis, D. D. (1983) Water snake. Amphibians and reptiles of New England. Amherst, MA: University of Massachusetts Press.

Feaver, P. E. (1977) The demography of a Michigan population of *Natrix sipedon* with discussions of ophidian growth and reproduction [Ph.D. dissertation]. Ann Arbor, MI: University of Michigan.

Fitch, H. S. (1982) Resources of a snake community in prairie woodland habitat of northeastern Kansas. In: Scott, N. J., Jr., ed. Herpetological communities. U.S. Fish Wildl. Serv. Wildl. Res. Rep. 13; pp 83-98.

Fraker, M. A. (1970) Home range and homing in the watersnake, *Natrix s. sipedon*. Copeia 1970: 665-673.

Gratz, R. K.; Hutchinson, V. H. (1977) Energetics for activity in the diamondback water snake, *Natrix Rhombifera*. Physiol. Zool. 50: 99-114.

Justy, G. M.; Mallory, F. F. (1985) Thermoregulatory behaviour in the northern water snake, *Nerodia s. sipedon,* and the eastern garter snake, *Thamnophis s. sirtalis*. Can. Field-Nat. 99: 246-249.

Kaufman, G. A.; Gibbons, J. W. (1975) Weight-length relationship in thirteen species of snakes in the southeastern United States. Herpetologica 31: 31-37.

King, R. B. (1986) Population ecology of the Lake Erie water snake, *Nerodia sipedon insularum*. Copeia 1986: 757-772.

King, R. B. (1989) Body size variation among island and mainland snake populations. Herpetologica 45: 84-88.

Lagler, K. F.; Salyer, J. C., II. (1945) Food and habits of the common water snake, *Natrix sipedon*, in Michigan. Pap. Michigan Acad. Sci., Arts and Letters 31: 169-180.

Martof, B. S.; Palmer, W. M.; Bailey, J. R.; et al. (1980) Water snake. Amphibians and reptiles of the Carolinas and Virginia. Chapel Hill, NC: University of North Carolina Press.

Mushinsky, H. R.; Hebrard, J. J.; Vodopich, D. S. (1982) Ontogeny of water snake foraging ecology. Ecology 63: 1624-1629.

Plummer, M. V.; Goy, J. M. (1984) Ontogenetic dietary shift of water snakes (*Nerodia rhombifera*) in a fish hatchery. Copeia 1984: 550-552.

Raney, E. C.; Roecker, R. M. (1947) Food and growth of two species of watersnakes from western New York. Copeia 1947: 171-174.

Smith, H. M. (1956) Water snake. Handbook of amphibians and reptiles of Kansas. Univ. Kansas Mus. Nat. Hist. Misc. Publ. 9; 356 pp.

Smith, P. W. (1961) The amphibians and reptiles of Illinois. Ill. Nat. Hist. Surv. Bull. 28.

Uhler, F. M.; Cottom, C.; Clarke, T. E. (1939) Food of snakes of the George Washington National Forest, Virginia. Trans. North Am. Wildl. Nat. Resour. Conf. 4: 605-622.

Wright, A. H.; Wright, A. A. (1957) Handbook of snakes: v. 2. Ithaca, NY: Comstock.

2.3.6. Eastern Newt (salamanders)

Order *Caudata*, Family *Salamandridae*. *Notophthalmus*, the genus comprising the eastern newts, inhabits eastern North America. A different genus, *Taricha*, comprises the western newts along the Pacific coast of North America. Unlike other salamanders, the skin of newts is rough textured, not slimy. Eastern newts are primarily aquatic; western newts are terrestrial. The life cycle of eastern newts is complex. Females deposit their eggs into shallow surface waters. After hatching, the larvae remain aquatic for 2 to several months before transforming into brightly colored terrestrial forms, called efts (Healy, 1974). Postlarval migration of efts from ponds to land may take place from July through November, but timing varies between populations (Hurlbert, 1970). Efts live on land (forest floor) for 3 to 7 years (Healy, 1974). They then return to the water and assume adult characteristics. In changing from an eft to an adult, the newt develops fins and the skin changes to permit aquatic respiration (Smith, 1961). Occasionally newts omit the terrestrial eft stage, especially in the species located in the southeast coastal plain (Conant and Collins, 1991) and along the Massachusetts coast (Healy, 1974). These aquatic juveniles have the same adaptations (i.e., smooth skin and flattened tail) as the aquatic adults but are not sexually mature (Healy, 1973). Under favorable conditions, adults are permanently aquatic; however, adults may migrate to land after breeding due to dry ponds, high water temperatures, and low oxygen tension (Hurlbert, 1969). The life cycle of western newts does not include the eft stage (Conant and Collins, 1991).

Selected species

The eastern newt (*Notophthalmus viridescens*) has both aquatic and terrestrial forms. The aquatic adult is usually yellowish-brown or olive-green to dark brown above, yellow below. The land-dwelling eft is orange-red to reddish-brown, and its skin contains tetrodotoxin, a neurotoxin and powerful emetic. There are four subspecies of eastern newts: *N. v. viridescens* (red-spotted newt; ranges from Nova Scotia west to Great Lakes and south to the Gulf states), *N. v. dorsalis* (broken-striped newt; ranges along the coastal plain of the Carolinas), *N. v. louisianensis* (central newt; ranges from western Michigan to the Gulf), and *N. v. piaropicola* (peninsula newt; restricted to peninsular Florida) (Conant and Collins, 1991). Neoteny[n] occurs commonly in the peninsula and broken-striped newts. In the central newt, neoteny is frequent in the southeastern coastal plain. In the red-spotted newt, neoteny is rare (Conant and Collins, 1991).

Body size. Adult eastern newts usually are 6.5 to 10.0 cm in total length (Conant and Collins, 1991). In North Carolina, *N. v. dorsalis* efts ranged from 2.1 to 3.8 cm snout-to-vent length (SVL), which excludes the tail, and adults ranged from 2.0 to 4.4 cm SVL (Harris, 1989; Harris et al., 1988). Healy (1973) found aquatic juveniles 1 year of age to range from 2.0 to 3.2 cm SVL. Adult eastern newts weigh approximately 2 to 3 g (Gill, 1979; Gillis and Breuer, 1984), whereas the efts generally weigh 1 to 1.5 g (Burton, 1977; Gillis and Breuer, 1984).

---

[n]Neotenic newts are mature and capable of reproduction but retain the larval form, appearance, and habits (Conant and Collins, 1991).

Habitat. Larval and adult eastern newts are found in ponds, especially those with abundant submerged vegetation, and in weedy areas of lakes, marshes, ditches, backwaters, and pools of shallow slow-moving streams or other unpolluted shallow or semipermanent water. Terrestrial efts inhabit mixed and deciduous forests (Bishop, 1941, cited in Sousa, 1985) and are found in moist areas, typically under damp leaves, brush piles, logs, and stumps, usually in wooded habitats (DeGraaf and Rudis, 1983). Adequate surface litter is important, especially during dry periods, because efts seldom burrow (Healy, 1981, cited in Sousa, 1985).

Food habits. Adult eastern newts are opportunistic predators that prey underwater on worms, insects and their larvae (e.g., mayfly, caddisfly, midge, and mosquito larvae), small crustaceans and molluscs, spiders, amphibian eggs, and occasionally small fish. Newts capture prey at the surface of the water and on the bottom of the pond, as well as in the water column (Ries and Bellis, 1966). The shed skin (exuvia) is eaten and may comprise greater than 5 percent of the total weight of food items of both the adult and eft diets (MacNamara, 1977). Snails are an important food source for the terrestrial eft (Burton, 1976). Efts feed only during rainy summer periods (Behler and King, 1979; Healy, 1973). Healy (1975) noted that in late August and September, efts often were found clustered around decaying mushrooms feeding on adult and larval dipterans. In a northern hardwood hemlock forest in New York, MacNamara (1977) found that most prey of adult migrants and immature efts were from the upper litter layer, soil surface, or low vegetation.

Temperature regulation and daily activities. Adult newts are often seen foraging in shallow water, and efts are often found in large numbers on the forest floor after it rains (Behler and King, 1979). Efts may be found on the open forest floor even during daylight hours (Conant and Collins, 1991), but they rarely emerge if the air temperature is below 10°C (Healy, 1975).

Hibernation. Most adults remain active all winter underwater on pond bottoms or in streams (DeGraaf and Rudis, 1983). Some adults overwinter on land (Hurlbert, 1970) and migrate to ponds during the spring to breed (Hurlbert, 1969). If the water body freezes to the bottom, adults may be forced to hibernate on land or to migrate to another pool (Smith, 1956). Efts hibernate on land, burrowing under logs and debris. Hurlbert (1969) observed that efts migrated to ponds for the first time in the spring and fall.

Breeding activities and social organization. In south-central New York, breeding takes place in late winter or early spring, usually in lakes, ponds, and swamps (Hurlbert, 1970). Ovulation and egg deposition occur over an extended period (McLaughlin and Humphries, 1978). Females overwintering on land can store sperm for at least 10 months (Massey, 1990). Spawning underwater, the female deposits eggs singly on leaves of submerged plants, hiding and wrapping each in vegetation (Gibbons and Semlitsch, 1991; Smith 1956). The time to hatching depends on temperature (DeGraaf and Rudis, 1983). Smith (1961) found typical incubation periods to be 14 to 21 days in Illinois, whereas the incubation period observed by Behler and King (1979) was 21 to 56 days.

Growth and metamorphosis. In late summer or early fall, the larvae transform into either aquatic juveniles or terrestrial efts (Behler and King, 1979). Harris (1987) showed

that low larval density stimulated neoteny in larvae under experimental conditions. Larval growth rates were higher in ponds with low larval densities (Harris, 1987; Morin et al., 1983). Growth rates for aquatic juveniles are highest in the spring; however, maximum seasonal growth for the terrestrial efts occurs between June and September when the temperature is optimal for active foraging (Healy, 1973).

Home range and resources. For adult newts, Bellis (1968) found the mean distance between capture and recapture sites to be about 7 m, indicating small home ranges. Harris (1981, cited in DeGraaf and Rudis, 1983) did not find any defined home range or any territoriality for males. Most efts around a pond in Pennsylvania remained within 1.5 m of the shore (Bellis, 1968). Healy (1975) estimated the home range for terrestrial efts in a Massachusetts woodland to be 270 m^2 and located approximately 800 m from the ponds where the adults and larvae were located.

Population density. Populations of aquatic adults may reach high local densities, whereas terrestrial efts exhibit lower population densities. Recorded population densities for terrestrial efts range from 34 per hectare (ranging from 20 to 50 efts per hectare) in a North Carolina mixed deciduous forest (Shure et al., 1989) to 300 per hectare in a Massachusetts woodland (Healy, 1975). Harris et al. (1988) observed a density of 1.4 adult newts per m^2 (14,000 adult newts per hectare) in a shallow pond in North Carolina in the winter, whereas the summer population density was only 0.2 adults per m^2 (2,000 adults per hectare).

Population dynamics. Many populations of the eastern newt reach sexual maturity when the eft stage returns to the water and changes to the adult form (Healy, 1974). However, under certain conditions such as low larval density, most of the larvae present have been shown to metamorphose directly into adults or even into sexually mature larvae (Harris, 1987). In experimental ponds, densities of 22 larvae per m^2 resulted in metamorphosis to eft by the majority, while a density of 5.5 larvae per m^2 resulted in metamorphosis directly to the adult form or sexual maturation without metamorphosis (Harris, 1987). Adult density also influences reproduction. Morin et al. (1983) found that doubling adult density resulted in a reduction of offspring produced to one-quarter that produced by adults at the lower density (i.e., from 36 offspring per female in tanks containing 1.1 females per m^2 to 9.7 offspring per female in tanks containing 2.2 females per m^2). The adult life expectancy noted by Gill (1978b) was 2.1 breeding seasons for males and 1.7 breeding seasons for females. Amphibian blood leeches (ectoparasites) are likely to be a primary source of mortality for adults; they also prey directly on larvae (Gill, 1978a).

Similar species (from general references)

- The black-spotted newt (*Notophthalmus meridionalis*) is similar in size (7.5 to 11.0 cm) to the eastern newt. It has large black spots and is found in south Texas in ponds, lagoons, and swamps. There is no eft stage.

- The striped newt (*Notophthalmus perstriatus*) is smaller (5.2 to 7.9 cm) than the eastern newt and ranges from southern Georgia to central Florida. It is found in almost any body of shallow, standing water.

- The western newts (*Taricha*) are found along the Pacific coast. They do not undergo the eft stage but rather transform into land-dwelling adults that return to the water at breeding time.

- Other small salamanders are similar but vary by having slimy skin and conspicuous costal grooves. They differ in life history, however; in the family *Plethudontidae*, all are lungless and breathe through thin, moist skin. Many are completely terrestrial.

General references

Behler and King (1979); Conant and Collins (1991); DeGraaf and Rudis (1983); Hurlbert (1969); Smith (1961).

Eastern Newt (*Notophthalmus viridescens*)

Factors	Age/Sex/ Cond./Seas.	Mean	Range or (95% CI of mean)	Location (subspecies)	Reference	Note No.
Body Weight (g)	adult:					
	B	2.24 ± 0.71 SD	1.12 - 3.52	New York	Gillis & Breuer, 1984	
	F prebreed	3.05 ± 0.06 SE		Virginia	Gill, 1979	
	F postbreed	2.49 ± 0.06 SE				
	M prebreed	2.49 ± 0.03 SE				
	M postbreed	2.76 ± 0.03 SE				
	B spring	1.71 ± 0.43 SD		Massachusetts	Pitkin, 1983	
	B summer	2.13 ± 0.44 SD				
	B winter	1.94 ± 0.33 SD				
	B fall	1.63 ± 0.28 SD				
	larvae:					
	12.8 mm SVL	0.04 ± 0.025 SD		South Carolina	Taylor et al., 1988	
	21.9 mm SVL	0.54 ± 0.167 SD				
	eft:					
	B	1.10 ± 0.40 SD	0.42 - 1.82	New York	Gillis & Breuer, 1984	
	B	1.45		New Hampshire (*viridescens*)	Burton, 1977	
	B summer	1.23	0.63 - 2.17	New York	Stefanski et al., 1989	

Eastern Newt (*Notophthalmus viridescens*)

Factors	Age/Sex/ Cond./Seas.	Mean	Range or (95% CI of mean)	Location (subspecies)	Reference	Note No.
Length (mm SVL)	adult:					
	M	35.0	24 - 44	North Carolina (*dorsalis*)	Harris et al., 1988	
	F	35.0	20 - 42			
	B summer	38.9	33 - 48	New York	MacNamara, 1977	
	juvenile:					
	B spring	26.1 ± 0.35 SE	20 - 32	Massachusetts (*viridescens*)	Healy, 1973	
	larvae:					
	B spring	12.3		s Illinois	Brophy, 1980	
	B fall	19.2				
	eft:					
	B (mm total)	50.4 ± 0.5 SE		North Carolina (*dorsalis*)	Harris et al., 1988	
	B spring	20.5		Massachusetts (*viridescens*)	Healy, 1973	
	B summer	32.7	18 - 41	New York	MacNamara, 1977	
Larval Growth Rate (g/d)	high density:			North Carolina	Harris, 1987	
	-> efts	0.00310		high density: 55,000/ha		
	-> adults	0.00421				
	-> neonates	0.00536				1
	low density:					
	-> efts	0.00635		low density: 220/ha		
	-> adults	0.00685				
	-> neonates	0.00676				1
Metabolic Rate (lO_2/kg-d)	efts at 15°C:			New York	Stefanski et al., 1989	
	resting	1.47				
	active	4.27				

Eastern Newt (*Notophthalmus viridescens*)

Factors	Age/Sex/ Cond./Seas.	Mean	Range or (95% CI of mean)	Location (subspecies)	Reference	Note No.
Metabolic Rate (kcal/kg-d)	basal:					
	A M postbreed	16.2			estimated	2a
	A F postbreed	16.7				
	larvae (12.8 mm)	43.5			estimated	2b
	eft (71.0 mm)	20.1			estimated	2c
Food Ingestion Rate (g/g-d)						3
Surface Area (cm^2)	A M	17			estimated	4
	A F	15				

Dietary Composition			Fall	Winter	Location (subspecies)/ Habitat (measure)	Reference	Note No.
aquatic adults:					New Hampshire (*viridescens*)/small oligotrophic lake	Burton, 1977	
Ephemeroptera		7.5	7.5				
Odonata		31.9	1.9				
Lepidoptera		13.7	0.9				
Diptera		5.8	0.3		(% wet weight; stomach and gut contents)		
other insects		9.9	0.6				
Cladocerans		5.1	84.1				
Amphipoda		5.6	3.1				
Pelycepoda		6.2	1.5				
N. viridescens larvae		11.4	0.0				
other		3.2	0.1				

Eastern Newt (*Notophthalmus viridescens*)

Dietary Composition	Spring	Summer	Fall	Winter	Location (subspecies)/ Habitat (measure)	Reference	Note No.
efts:					New York/leaf litter surface in forest	MacNamara, 1977	
Basommatophora		5.5					
Stylommatophora		18.3					
Acari		13.8			(% dry weight; stomach contents)		
Collembola		10.4					
Thysanoptera		3.4					
Homoptera		4.7					
Coleoptera adult		2.3					
Coleoptera larvae		3.5					
Lepidoptera larvae		7.9					
Diptera adult		9.7					
Diptera larvae		10.6					
Hymenoptera adult		5.8					
larvae:					New Hampshire (*viridescens*)/small oligotrophic lake	Burton, 1977	
Zygoptera (Odonata)		0.8					
Chironomidae (Diptera)		16.2					
Cladocera		12.7			(% wet weight; stomach and gut contents)		
Ostracoda		5.3					
Hyallela azteca (Amphipoda)		55.1					
Sphaerium sp. (Pelycepoda)		9.4					
Planorbidae (Gastropoda)		0.5					
Rhizopoda (Protozoa)		0.01					

Eastern Newt (*Notophthalmus viridescens*)

Population Dynamics	Age/Sex/ Cond./Seas.	Mean	Range or (95% CI of mean)	Location (subspecies)/ Habitat	Reference	Note No.
Home Range Size	eft: B	0.0087 ha	0.0028 - 0.0153	Massachusetts (*viridescens*)/ oak/pine forest	Healy, 1975	
	adult: summer	6.86 m		Pennsylvania (*viridescens*)/pond	Bellis, 1968	5
Population Density (N/ha)	A B entire lake A B fringe only	130 - 173 50 - 2,600		New Hampshire (*viridescens*)/small oligotrophic lake	Burton, 1977	
	A winter A summer	50,000 ± 9,000 SE 3,000 ± 1,000 SE		North Carolina (*dorsalis*)/ shallow pond	Harris et al., 1988	
	eft spring	300		Massachusetts (*viridescens*)/ oak/pine forest	Healy, 1975	
	eft summer	34	20 - 50	North Carolina (*viridescens*)/mixed deciduous forest	Shure et al., 1989	
	larvae spring	21,000	0 - 350,000	South Carolina/pond, wetland	Taylor et al., 1988	
	larvae spring summer fall	65,000 ± 15,000 SE 25,000 ± 5,000 SE 10,000 ± 3,000 SE		North Carolina (*dorsalis*)/ shallow pond	Harris et al., 1988	
Clutch Size (eggs)		200 - 400		NS/NS	Behler & King, 1979	
Days to Hatching		14 - 21		Illinois/NS	Smith, 1961	
		21 - 56		NS/NS	Behler & King, 1979	

Eastern Newt (*Notophthalmus viridescens*)

Population Dynamics	Age/Sex/ Cond./Seas.	Mean	Range or (95% CI of mean)	Location (subspecies)/ Habitat	Reference	Note No.
Age at Metamorphosis	larvae -> eft	2 - 3 mo		Illinois (*louisianensis*)/NS	Smith, 1961	
		6 mo		Massachusetts (*viridescens*)/inland ponds	Healy, 1974	
	eft -> adult	1 - 3 yrs		South Carolina/ponds	Gibbons & Semlitsch, 1991	
Age at Sexual Maturity	3 - 7 years eft	5 - 6 yrs	4 - 8	Massachusetts (*viridescens*)/inland ponds	Healy, 1974	
	no eft stage	2 yrs		coastal ponds		
Annual Mortality Rates (%)	A F A M	54.1 - 59.5 45.8 - 53.1		Virginia/mountain ponds	Gill, 1978a	
Longevity (breeding seasons)	A F A M	1.7 2.1		Virginia/mountain ponds	Gill, 1978b	

Seasonal Activity			End	Location	Reference	Note No.
Mating/Laying	February - March		April - May	South Carolina	Gibbons & Semlitsch, 1991	
	April		June	North Carolina	Harris et al., 1988	
Hatching	June			Virginia	Gill, 1978a	
	late April			North Carolina	Harris et al., 1988	
		spring		NS	Behler and King, 1979	

Eastern Newt (*Notophthalmus viridescens*)

Seasonal Activity	Begin	Peak	End	Location	Reference	Note No.
	June		September	South Carolina	Gibbons & Semlitsch, 1991	
	mid-August		late November	Virginia	Gill, 1978a	
	mid-July	August - Sept.	early November	New York	Hurlbert, 1970	
	August - Sept.		November	Virginia	Gill, 1978a	
	late March		late April	Virginia	Massey, 1990	

1 "Neonates" refers to newts that become sexually mature in the larval form (i.e., neoteny).
2 Estimated assuming temperature of 20°C using Equation 3-50 (Robinson et al., 1983) and postbreeding body weights from (a) Gill (1979); (b) Taylor et al. (1988); and (c) Gillis and Breuer (1984). The values for the larvae should be used with caution because these animals are smaller than any used to develop the allometric equations.
3 See Chapters 3 and 4 for methods of estimating food ingestion rates from metabolic rate and diet.
4 Estimated using Equation 3-26 (Whitford and Hutchinson, 1967) and postbreeding body weights from Gill, 1979.
5 Mean distance between capture and recapture sites, suggesting small home range size.

References (including Appendix)

Behler, J. L.; King, F. W. (1979) The Audubon Society field guide to North American reptiles and amphibians. New York, NY: Alfred A. Knopf, Inc.

Bellis, E. D. (1968) Summer movement of red-spotted newts in a small pond. J. Herpetol. 1: 86-91.

Bennett, S. M. (1970) Homing, density and population dynamics in the adult newt, *Notophthalmus viridescens* Rafinesque [Ph.D. dissertation]. Hanover, NH: Dartmouth College.

Bishop, S. C. (1941) The salamanders of New York. N. Y. State Mus. Bull. 324; 365 pp.

Brophy, T. E. (1980) Food habits of sympatric larval *Ambystoma tigrinum* and *Notopthalmus viridescens*. J. Herpetol. 14: 1-6.

Burton, T. M. (1976) An analysis of the feeding ecology of the salamanders (Amphibia, Urodela) of the Hubbard Brook Experimental Forest, New Hampshire. J. Herpetol. 10: 187-204.

Burton, T. M. (1977) Population estimates, feeding habits and nutrient and energy relationships of *Notophthalmus v. viridescens*, in Mirror Lake, New Hampshire. Copeia 1977: 139-143.

Conant, R.; Collins, J. T. (1991) A field guide to reptiles and amphibians: eastern/central North America. Boston, MA: Houghton Mifflin Co.

DeGraaf, R. M.; Rudis, D. D. (1983) Amphibians and reptiles of New England. Amherst, MA: University of Massachusetts Press.

Gage, S. H. (1891) The life history of the vermillion-spotted newt. Am. Nat. 25: 1084-1103.

Gibbons, J. W.; Semlitsch, R. D. (1991) Guide to the reptiles and amphibians of the Savannah River Site. Athens, GA: University of Georgia Press.

Gill, D. E. (1978a) The metapopulation ecology of the red-spotted newt, *Notophthalmus viridescens* (Rafinesque). Ecol. Monogr. 48: 145-166.

Gill, D. E. (1978b) Effective population size and interdemic migration rates in a metapopulation of the red-spotted newt, *Notophthalmus viridescens*. Evolution 32: 839-849.

Gill, D. E. (1979) Density dependence and homing behavior in adult red-spotted newts *Notophthalmus viridescens* (Rafinesque). Ecology 60: 800-813.

Gillis, J. E.; Breuer, W. J. (1984) A comparison of rates of evaporative water loss and tolerance to dehydration in the red-eft and newt of *Notophthalmus viridescens*. J. Herpetol. 18: 81-82.

Harris, R. N. (1981) Intrapond homing behavior in *Notophthalmus viridescens*. J. Herpetol. 15: 355-356.

Harris, R. N. (1987) Density-dependent paedomorphosis in the salamander *Notophthalmus viridescens dorsalis*. Ecology 68: 705-712.

Harris, R. N. (1989) Ontogenetic changes in size and shape of the facultatively paedomorphic salamander *Notophthalmus viridescens dorsalis*. Copeia 1989: 35-42.

Harris, R. N.; Alford, R. A.; Wilbur, H. M. (1988) Density and phenology of *Notophthalmus viridescens dorsalis* in a natural pond. Herpetologica 44: 234-242.

Healy, W. R. (1973) Life history variation and the growth of the juvenile *Notophthalmus viridescens* from Massachusetts. Copeia 1973: 641-647.

Healy, W. R. (1974) Population consequences of alternative life histories in *Notophthalmus v. viridescens*. Copeia 1974: 221-229.

Healy, W. R. (1975) Terrestrial activity and home range in efts of *Notophthalmus viridescens*. Am. Midl. Nat. 93: 131-138.

Healy, W. R. (1981) Field test of an HSI model for the red-spotted newt (*Notophthalmus viridescens*) for the Habitat Evaluation Procedures Group [unpublished material]. Fort Collins, CO: U.S. Fish Wildl. Serv.; 21 pp.

Hurlbert, S. H. (1969) The breeding migrations and interhabitat wandering of the vermilion-spotted newt, *Notophthalmus viridescens* (Rafinesque). Ecol. Monogr. 39: 465-488.

Hurlbert, S. H. (1970) The post-larval migration of the red-spotted newt, *Notophthalmus viridescens* (Rafinesque). Copeia 1970: 515-528.

Logier, E. B. (1952) The frogs, toads and salamanders of eastern Canada. Toronto, Canada: University of Toronto Press.

MacNamara, M. C. (1977) Food habits of terrestrial adult migrants and immature red efts of the red-spotted newt, *Notophthalmus viridescens*. Herpetologica 33: 127-132.

Massey, A. (1990) Notes on the reproductive ecology of red-spotted newts (*Notophthalmus viridescens*). J. Herpetol. 24: 106-107.

McLaughlin, E. W.; Humphries, A. A., Jr. (1978) The jelly envelopes and fertilization of eggs of the newt, *Notophthalmus viridescens*. J. Morphol. 158: 73-90.

Morin, P. J. (1986) Interactions between intraspecific competition and predation in an amphibian predator-prey system. Ecology 67: 713-720.

Morin, P. J.; Wilbur, H. M.; Harris, R. N. (1983) Salamander predation and the structure of experimental communities: responses of *Notophthalmus* and *Microcrustacea*. Ecology 64: 1430-1436.

Pitkin, R. B. (1983) Annual cycle of body size and blood parameters of the aquatic adult red-spotted newt, *Notophthalmus viridescens*. J. Exp. Zool. 226: 372-377.

Ries, K. M.; Bellis, E. D. (1966) Spring food habits of the red-spotted newt in Pennsylvania. Herpetologica 22: 152-155.

Robinson, R. W.; Peters, R. H.; Zimmermann, J. (1983) The effects of body size and temperature on metabolic rate of organisms. Can. J. Zool. 61: 281-288.

Shure, D. J.; Wilson, L. A.; Hochwender, C. (1989) Predation on aposomatic efts of *Notophthalmus viridescens*. J. Herpetol. 23: 437-439.

Smith, H. M. (1956) Handbook of amphibians and reptiles of Kansas. Univ. Kansas Mus. Nat. Hist. Misc. Publ. 9; 356 pp.

Smith, P. W. (1961) The amphibians and reptiles of Illinois. Ill. Nat. Hist. Surv. Bull. 28; pp. 118-120.

Sousa, P. J. (1985) Habitat suitability index models: Red-spotted newt. U.S. Fish Wildl. Serv. Biol. Rep. 82(10.111); 18 pp.

Stefanski, M.; Gatten, R. E.; Pough, F. H. (1989) Activity metabolism of salamanders: tolerance to dehydration. J. Herpetol. 23: 45-50.

Taylor, B. E.; Estes, R. A.; Pechmann, J. H.; et al. (1988) Trophic relations in a temporary pond: larval salamanders and their microinvertebrate prey. Can. J. Zool. 66: 2191-2198.

Whitford, W. G.; Hutchinson, V. H. (1967) Body size and metabolic rate in salamanders. Physiol. Zool. 40: 127-133.

2.3.7. Green Frog (true frog family)

Order *Anura*, Family *Ranidae*. These are typical frogs with adults being truly amphibious, living at the edge of water bodies and entering the water to catch prey, flee danger, and spawn (Behler and King, 1979). This profile covers medium-sized ranids. The next profile (Section 2.3.8) covers large ranids.

Selected species

The green frog (*Rana clamitans*) is usually found near shallow fresh water throughout much of eastern North America. Two subspecies are recognized: *R. c. clamitans* (the bronze frog; ranges from the Carolinas to northern Florida, west to eastern Texas, and north along the Mississippi Valley to the mouth of the Ohio River) and *R. c. melanota* (the green frog; ranges from southeastern Canada to North Carolina, west to Minnesota and Oklahoma but rare in much of Illinois and Indiana, introduced into British Columbia, Washington, and Utah) (Conant and Collins, 1991).

Body size. The green frog is a medium-sized ranid usually between 5.7 and 8.9 cm snout-to-vent length (SVL) (Conant and Collins, 1991; Martof et al., 1980). Its growing period is primarily confined to the period between mid May and mid September (Martof, 1956b). Females are usually larger than males (Smith, 1961). Adults typically weigh between 30 and 70 g (Wells, 1978). Hutchinson et al. (1968) developed an allometric equation relating green frog surface area (SA in cm) to body weight (Wt in grams):

$$SA = 0.997\ Wt^{0.712}.$$

This equation also is presented in Chapter 3 as Equation 3-25.

Habitat. Adult green frogs live at the margins of permanent or semipermanent shallow water, springs, swamps, streams, ponds, and lakes (Wells, 1977). Martof (1953b) found green frogs primarily to inhabitat the banks of streams. They also can be found among rotting debris of fallen trees (Behler and King, 1979; Conant and Collins, 1991). Juveniles prefer shallower aquatic habitats with denser vegetation than those preferred by adults (Martof, 1953b). McAlpine and Dilworth (1989) observed that green frogs inhabited aquatic habitats about two-thirds of the time and terrestrial habitats the remaining time. Similarly, Martof (1953b) found that the green frog relies on terrestrial habitats for feeding and aquatic habitats for refuge from desiccation, temperature extremes, and enemies. Ponds used by green frogs are usually more permanent than those used by other anuran species (Pough and Kamel, 1984).

Food habits. Adult *R. clamitans* are terrestrial feeders among shoreline vegetation. They consume insects, worms, small fish, crayfish, other crustaceans, newts, spiders, small frogs, and molluscs. Stewart and Sandison (1973) found that terrestrial beetles often are their most important food item but noted that any locally abundant insect along the shoreline may be consumed in large numbers. There is a pronounced reduction in food consumption during the breeding period for both males and females (Mele, 1980). During the breeding season, males spend most of their energy defending breeding territories, and

females expend their energy producing eggs (Wells, 1977). Fat reserves acquired during the prebreeding period compensate for reduced food intake during the breeding period (Mele, 1980). Jenssen and Klimstra (1966) found that green frogs consume most of their food in the spring and eat little during the winter. Food eaten in the spring, summer, and fall consists mostly of terrestrial prey, whereas winter food is composed mostly of aquatic prey (Jenssen and Klimstra, 1966). Juveniles (sexually immature frogs) eat about half the volume of food as do adults over the course of a year (Jenssen and Klimstra, 1966). Tadpoles are herbivorous (DeGraaf and Rudis, 1983). Green frogs eat their cast skins following molting; the casting of skin is frequent during midsummer (Hamilton, 1948).

Temperature regulation and daily activities. Martof (1953b) found that the green frog's activity period varies by frog size, with larger frogs being primarily nocturnal, small frogs being diurnal, and middle-sized frogs (5 to 7 cm SVL) being equally active during day and night.

Hibernation. Adult green frogs overwinter by hibernating underground or underwater from fall to spring (Ryan, 1953). Martof (1956a) observed frogs hibernating in mud and debris at the bottom of streams approximately 1 m deep. Jenssen and Klimstra (1966) noted that adults usually hibernate in restricted chambers within rock piles or beneath plant debris, while juveniles are more often found in locations with access to passing prey. The frogs begin emerging when the mean daily temperature is about 4.4°C and the maximum temperature is about 15.6°C for 3 to 4 days (Martof, 1953b). Juvenile frogs enter and exit hibernation after adult frogs (Martof, 1956a).

Breeding activities and social organization. Green frogs breed from spring through the summer, spawning at night (Smith, 1961; Wells, 1976). Female green frogs stay in nonbreeding habitat until it is time to spawn (Martof, 1956a). In preparation for breeding, males establish territories near shore that serve as areas for sexual display and as defended oviposition sites (Wells, 1977). Males establish calling sites within their territories where they attempt to attract females (Wells, 1977). Females visit male territories to mate and lay their egg masses. The masses are contained in films of jelly and are deposited in emergent, floating, or submerged vegetation; they hatch in about 3 to 6 days (Behler and King, 1979; Martof, 1956a; Ryan, 1953). Adults are solitary during non-breeding periods (Smith, 1956).

Tadpole and metamorphosis. In the southern part of their range, green frog tadpoles metamorphose into frogs in the same season in which they hatched, while in the northern part, 1 or 2 years pass before metamorphosis (Martof, 1956b). Tadpoles that hatch from egg masses laid in the spring usually metamorphose that fall, while those hatching from summer-laid eggs typically overwinter as larvae and metamorphose the following spring (Pough and Kamel, 1984). Ryan (1953) found that most tadpoles are 2.6 to 3.8 cm SVL at the time of transformation. Those that transform in late June or early July grow rapidly, adding 1.4 to 2.0 cm SVL in the first 2 months and 0.4 to 0.7 cm SVL more before hibernation. Tadpoles that transform at approximately 3.1 cm SVL may reach between 5.0 and 5.8 cm SVL before hibernation (Ryan, 1953). Newly transformed frogs often move from lakes and ponds where they were tadpoles to shallow stream banks, usually during periods of rain (Martof, 1953b).

Home range and resources. The species' home range includes its foraging and refuge areas in and around aquatic environments. During the breeding period, the male's home range also includes its breeding territory (Wells, 1976). Martof (1953b) found that roughly 80 percent of adult frogs captured in the spring and again in the fall occupied the same home ranges.

Population density. During the breeding season, green frog densities at breeding ponds can exceed several hundred individuals per hectare (Wells, 1978). Adult male frogs space their breeding territories about 2 to 3 m apart (Martof, 1953a).

Population dynamics. Sexual maturity is attained in 1 or 2 years after metamorphosis; individuals may reach maturity at the end of the first year but not attempt to breed until the next year (Martof, 1956a,b). Most females lay one clutch per year, although some may lay two clutches, about 3 to 4 weeks apart (Wells, 1976). In natural populations, green frogs can live to approximately 5 years of age (Martof, 1956b).

Similar species (from general references)

- The river frog (*Rana heckscheri*) is slightly larger than the green frog (8.0 to 12.0 cm SVL) and is found in swamps from southeast North Carolina to central Florida and southern Mississippi.

- The leopard and pickerel frogs (*Rana pipiens* and its relatives, and *Rana palustris*) are medium sized and strongly spotted. There are four leopard frogs whose ranges are mostly exclusive from each other, but overlap with the green frog. The pickerel frog has a similar range with gaps in the upper midwest and the southeast.

- The mink frog (*Rana septentrionalis*) is only slightly smaller (4.0 to 7.0 cm) and is found on the borders of ponds and lakes, especially near waterlilies. It ranges from Minnesota to New York, north to Labrador.

- The carpenter frog (*Rana virgatipes*) is about the same size as the green frog (4.1 to 6.7 cm) and is closely associated with sphagnum bogs and grasslands. It has a coastal plain range from New Jersey to Georgia and Florida.

The bullfrog and pig frog are much larger ranid species and are covered in the next profile (Section 2.3.8).

General references

Behler and King (1979); Conant and Collins (1991); DeGraaf and Rudis (1983); Martof (1953a, b, 1956a, b); Smith (1956, 1961).

Green Frog (*Rana clamitans*)

Factors	Age/Sex/ Cond./Seas.	Mean	Range or (95% CI of mean)	Location (subspecies)	Reference	Note No.
Body Weight (g)	B B	49.1 ± 20.0 SD	25.5 - 103.5	New Brunswick, Canada	McAlpine & Dilworth, 1989	
	A M breeding	44.0 ± 10.0 SD	27.0 - 66.0	New York (*melanota*)	Wells, 1978	
	at metamorphosis	3		New York	Pough & Kamel, 1984	1
Length (mm SVL)	A	54 - 102		NS	Behler and King, 1979	
	A M	79.8 ± 8.5 SD	103 maximum	s Michigan	Martof, 1956b	
	A F	80.3 ± 8.9 SD	105 maximum			
	J B	32.6	28.4 - 36.3	s Michigan	Martof, 1956b	
Metabolic Rate (kcal/kg-d)	basal:					
	A	8.08			estimated	2
	at metamorphosis	15.8			estimated	3
Food Ingestion Rate (g/g-d)						4
Surface Area (cm^2)	A	17			estimated	5
	at metamorphosis	2			estimated	6

Dietary Composition	Spring	Summer	Fall	Winter	Location (subspecies)/Habitat (measure)	Reference	Note No.
adults:					New York/lake	Stewart & Sandison, 1973	7
plant material		10.8					
Araneae		12.1			(% total volume; stomach contents)		
Coleoptera		32.8					
Hemiptera		12.9					
Hymenoptera		14.4					
Diptera		6.8					
Ephemeroptera		5.6					
Mollusca		5.4					
Lepidoptera		2.5					

Green Frog (*Rana clamitans*)

Dietary Composition	Spring	Summer	Fall	Winter	Location (subspecies)/Habitat (measure)	Reference	Note No.
adults:					s Illinois/swamp, stream	Jenssen & Klimstra, 1966	
mineral	-	-	-	2.6			
plant	5.7	8.3	4.2	0.5	(% wet volume; stomach contents)		
Pulmonata	15.7	18.3	6.4	11.0			
Oligochaeta	2.1	0.8	2.3	6.4			
Amphipoda	1.2	0.1	-	4.6			
Isopoda	5.6	1.4	-	4.6			
Decapoda	-	-	4.1	-			
Julioforma	7.5	0.3	1.7	-			
Araneida	2.8	3.4	6.6	7.4			
Odonata	1.6	12.4	5.9	-			
Orthoptera	0.9	3.0	1.5	-			
Hemiptera	1.0	7.0	6.1	2.2			
Coleoptera	9.6	19.6	15.9	9.1			
Lepidoptera	25.4	7.0	25.1	-			
Diptera	6.0	5.2	4.5	10.3			
Hymenoptera	9.9	6.0	13.5	-			
Salientia	-	-	3.9	-			

Population Dynamics	Age/Sex/ Cond./Seas.	Mean	Range or (95% CI of mean)	Location (subspecies)/ Habitat		Note No.
Home Range Size	A B nonbreeding	0.0065 ± 0.0036 SD ha	0.0020 - 0.020 ha	s Michigan (*melanota*)/ shallow water	Martof, 1953b	8
	A M breeding	meters shoreline: 4.0 - 6.0		New York (*melanota*)/ open nearshore areas of ponds	Wells, 1977	
	A M breeding	meters shoreline: 1.0 - 1.5		New York (*melanota*)/ densely vegetated nearshore areas of ponds	Wells, 1977	
Population Density (N/ha)	A M A F	476 567		New York (*melanota*)/ artificial pond	Wells, 1978	9

Green Frog (*Rana clamitans*)

Population Dynamics	Age/Sex/ Cond./Seas.	Mean	Range or (95% CI of mean)	Location (subspecies)/ Habitat	Reference	Note No.
Clutch Size		4,100	3,800 - 4,300	s Michigan (*melanota*)/ pond	Martof, 1956a	
			1,000 - 7,000	New York (*melanota*)/ shallow ponds	Wells, 1976	
			3,500 - 4,000	New York (*melanota*)/ shallow water	Wright, 1914	10
Clutches/Year			1 - 2	New York (*melanota*)/ shallow ponds	Wells, 1976	
Days Incubation (d)		3 - 6		Connecticut (*melanota*)/ shallow water	Babbit, 1937	10
		3 - 5		New York/ponds, pools	Ryan, 1953	
Age at Metamorphosis			1 - 2 yrs	New England (*melanota*)/ shallow water	DeGraaf & Rudis, 1983	
	early eggs late eggs	3 mo 10 - 12 mo		Virginia, Carolinas/ shallow ponds	Martof et al., 1980	
	early eggs late eggs	2.5 - 3 mo 11 - 12 mo		s Michigan (*melanota*)/ shallow ponds	Martof, 1956a, b	11
Age at Sexual Maturity (yr)	A M A F	1 - 2 1 - 2		s Michigan (*melanota*)/ shallow ponds	Martof, 1956a, b	
	B	1		New York (*melanota*)/ pond	Wells, 1977	

Green Frog (*Rana clamitans*)

Seasonal Activity	Begin	Peak	End	Location (subspecies)	Reference	Note No.
Mating/Laying	May	early June	mid-August	s Michigan (*melanota*)	Martof, 1956a	
	May		September	Illinois (*melanota*)	Smith, 1961	
	early June		mid-August	New York	Wells, 1976	
Meta-morphosis						
eggs laid early	early August		late September	s Michigan (*melanota*)	Martof, 1956b	12
		August, September		New York	Pough & Kamel, 1984	12
eggs laid late	early June		mid-July	s Michigan (*melanota*)	Martof, 1956b	13
		next spring		New York	Pough & Kamel, 1984	13
Hibernation	Oct. - Nov.		March - April	s Michigan (*melanota*)	Martof, 1956a	
	Oct.		late March	New York	Ryan, 1953	

1 Weight at metamorphosis can vary by two to four times between the smallest and largest individuals.
2 Estimated assuming temperature of 20°C using Equation 3-50 (Robinson et al., 1983) and body weights from McAlpine and Dilworth (1989).
3 Estimated assuming temperature of 20°C using Equation 3-50 (Robinson et al., 1983) and body weights from Pough and Kamel (1984).
4 See Chapters 3 and 4 for methods of estimating food ingestion rates from metabolic rate and diet.
5 Estimated using Equation 3-25 (Hutchinson et al., 1968) and body weights from McAlpine and Dilworth (1989).
6 Estimated using Equation 3-25 (Hutchinson et al., 1968) and body weights from Pough and Kamel (1984).
7 Season not specified.
8 Daily activity range of nonbreeding frogs.
9 Frogs were initially hand-captured and placed in pond; the numbers given are for those frogs that stayed.
10 Cited in DeGraaf and Rudis (1983).
11 Eggs laid before June.
12 Metamorphosed in the same year eggs were laid.
13 Metamorphosed the year following the season the eggs were laid.

References (including Appendix)

Babbitt, L. H. (1937) The amphibia of Connecticut. Hartford, CT: State Geol. and Nat. Hist. Surv.; Bull. No. 57. 9-50

Behler, J. L.; King, F. W. (1979) The Audubon Society field guide to North American reptiles and amphibians. New York: Alfred A. Knopf, Inc.

Bush, F. M. (1959) Foods of some Kentucky herptiles. Herpetologica 15: 73-77.

Conant, R.; Collins, J. T. (1991) A field guide to reptiles and amphibians. Boston, MA: Houghton Mifflin Co.

DeGraaf, R. M.; Rudis, D.D. (1983) Green frog. Amphibians and reptiles of New England. Amherst, MA: University of Massachusetts Press.

Hamilton, W. J., Jr. (1948) The food and feeding behavior of the green frog, *Rana clamitans* (Latreille), in New York state. Copeia 1948: 203-207.

Hutchinson, V. H.; Whitford, W. G.; Kohl, M. (1968) Relation of body size and surface area to gas exchange in anurans. Physiol. Zool. 41: 65-85.

Jenssen, T. A.; Klimstra, W. D. (1966) Food habits of the green frog, *Rana clamitans*, in southern Illinois. Amer. Midl. Nat. 76: 169-182.

Martof, B. S. (1953a) Territoriality in the green frog, *Rana clamitans*. Ecology 34: 165-174.

Martof, B. S. (1953b) Home range and movements of the green frog, *Rana clamitans*. Ecology 34: 529-543.

Martof, B. S. (1956a) Factors influencing size and composition of populations of *Rana clamitans*. Am. Midl. Nat. 56: 224-245.

Martof, B. S. (1956b) Growth and development of the green frog, *Rana clamitans*, under natural conditions. Am. Midl. Nat. 55: 101-117.

Martof, B. S.; Palmer, W. M.; Bailey, J. R.; et al. (1980). Amphibians and reptiles of the Carolinas and Virginia. Chapel Hill, NC: University of North Carolina Press.

McAlpine, D. F.; Dilworth, T. G. (1989) Microhabitat and prey size among three species of *Rana* (Anura: Ranidae) sympatric in eastern Canada. Can. J. Zool. 67: 2241-2252.

Mele, J. A. (1980) The role of lipids in storage and utilization of energy for reproduction and maintenance in the green frog, *Rana clamitans* [Ph.D. dissertation]. New Brunswick, NJ: Rutgers University.

Pope, C. H. (1947) Amphibians and reptiles of the Chicago area. Chicago, IL: Chicago Nat. Hist. Mus. Press.

Pough, F. H.; Kamel, S. (1984) Post-metamorphic physiological change in relation to anuran life histories. Oecologia 65: 138-144.

Robinson, F. W.; Peters, R. H.; Zimmermann, J. (1983) The effects of body size and temperature on metabolic rate of organisms. Can. J. Zool. 61: 281-288.

Ryan, R. A. (1953) Growth rates of some ranids under natural conditions. Copeia 1953:73-80.

Smith, H. M. (1956) Handbook of amphibians and reptiles of Kansas. Univ. Kansas Mus. Nat. Hist. Misc. Publ. 9.

Smith, P. W. (1961) The amphibians and reptiles of Illinois. Ill. Nat. Hist. Surv. Bull. 28.

Stewart, M. M.; Sandison, P. (1973) Comparative food habits of sympatric mink frogs, bullfrogs, and green frogs. J. Herpetol. 6: 241-244.

Wells, K. D. (1976) Multiple egg clutches in the green frog (*Rana clamitans*). Herpetologica 32: 85-87.

Wells, K. D. (1977) Territoriality and male mating success in the green frog (*Rana clamitans*). Ecology 58: 750-762.

Wells, K. D. (1978) Territoriality in the green frog (*Rana clamitans*): vocalizations and agonistic behaviour. Anim. Behav. 26: 1051-1063.

Wright, A. H. (1914) North American anura: life histories of the anurans of Ithaca, New York. Washington, DC: Carnegie Institute; Publ. No. 197.

2.3.8. Bullfrog (true frog family)

Order *Anura*, Family *Ranidae*. These are typical frogs with adults being truly amphibious. They tend to live at the edge of water bodies and enter the water to catch prey, flee danger, and spawn (Behler and King, 1979). This profile covers large ranids. Medium-sized ranids are covered in the previous profile (Section 2.3.7).

Selected species

The bullfrog's (*Rana catesbeiana*) natural range includes the eastern and central United States and southeastern Canada; however, it has been introduced in many areas in the western United States and other parts of North America. It is continuing to expand its range, apparently at the expense of several native species in many locations (Bury and Whelan, 1984). There are no subspecies for the bullfrog.

Body size. The bullfrog is the largest North American ranid. Adults usually range between 9 and 15 cm in length from snout-to-vent length (SVL) and exceptional individuals can reach one half kilogram or more in weight (Conant and Collins, 1991; Durham and Bennett, 1963). Males are usually smaller than females (Smith, 1961). Frogs exhibit indeterminate growth, and bullfrogs continue to increase in size for at least 6 years after metamorphosis (Durham and Bennett, 1963; Howard, 1981a). Hutchinson et al. (1968) developed an allometric equation relating bullfrog surface area (SA in cm) to body weight (Wt in grams):

$$SA = 0.953\ Wt^{0.725}.$$

This equation also is presented in Chapter 3 as Equation 3-24.

Habitat. Adult bullfrogs live at the edges of ponds, lakes, and slow-moving streams large enough to avoid crowding and with sufficient vegetation to provide easily accessible cover (Behler and King, 1979). Small streams are used when better habitat is lacking (Conant and Collins, 1991). Bullfrogs require permanent bodies of water, because the tadpoles generally require 1 or more years to develop prior to metamorphosis (Howard, 1981b). Small frogs favor areas of very shallow water where short grasses or other vegetation or debris offer cover (Durham and Bennett, 1963). Larger bullfrogs seem to avoid such areas (Durham and Bennett, 1963). Tadpoles tend to congregate around green plants (Jaeger and Hailman, 1976, cited in Bury and Whelan, 1984).

Food habits. Adult *R. catesbeiana* are indiscriminate and aggressive predators, feeding at the edge of the water and among water weeds on any available small animals, including insects, crayfish, other frogs and tadpoles, minnows, snails, young turtles, and occasionally small birds, small mammals, and young snakes (Behler and King, 1979; DeGraaf and Rudis, 1983; Korschgen and Baskett, 1963). Bullfrogs often focus on locally abundant foods (e.g., cicadas, meadow voles) (Korschgen and Baskett, 1963). Crustaceans and insects probably make up the bulk of the diet in most areas (Carpenter and Morrison, 1973; Fulk and Whitaker, 1968; Smith, 1961; Tyler and Hoestenbach, 1979). Bullfrog tadpoles consume primarily aquatic plant material and some invertebrates,

but also scavenge dead fish and eat live or dead tadpoles and eggs (Bury and Whelan, 1984; Ehrlich, 1979).

Temperature regulation and daily activities. Bullfrogs forage by day (Behler and King, 1979). They thermoregulate behaviorally by positioning themselves relative to the sun and by entering or leaving the water (Lillywhite, 1970). In one study, body temperatures measured in bullfrogs during their normal daily activities averaged 30°C and ranged from 26 to 33°C (Lillywhite, 1970). At night, their body temperatures were found to range between 14.4 and 24.9°C (Lillywhite, 1970). Tadpoles also select relatively warm areas, 24 to 30°C (Bury and Whelan, 1984). Despite this narrow range of temperatures in which bullfrogs normally maintain themselves, they are not immobilized by moderately lower temperatures (Lillywhite, 1970). The metabolic rate of bullfrogs increases with increasing body temperature. Between 15 and 25°C, the Q_{10} for oxygen consumption is 1.87; between 25 and 33°C, the Q_{10} is 2.41 (Burggren et al., 1983).

Hibernation. Most bullfrogs hibernate in mud and leaves under water beginning in the fall, but some bullfrogs in the southern states may be active year round (Bury and Whelan, 1984). They emerge sometime in the spring, usually when air temperatures are about 19 to 24°C and water temperatures are at least 13 to 14°C (Wright, 1914; Willis et al., 1956). Bullfrogs emerge from hibernation later than other ranid species (Ryan, 1953).

Breeding activities and *social organization.* Bullfrogs spawn at night close to shorelines in areas sheltered by shrubs (Raney, 1940, cited in DeGraaf and Rudis, 1983). The timing and duration of the breeding season varies depending on the location. In the southern states, the breeding season extends from spring to fall, whereas in the northern states, it is restricted to late spring and summer (Behler and King, 1979). Males tend to be territorial during the breeding season, defending their calling posts and oviposition sites (i.e., submerged vegetation near shore) (Howard, 1978b; Ryan, 1980). Female visits to the pond tend to be brief and sporadic (Emlen, 1976). Some males mate with several females whereas others, usually younger and smaller males, may not breed at all in a given year (DeGraaf and Rudis, 1983). Females attach their eggs, contained in floating films of jelly, to submerged vegetation (Behler and King, 1979). Adults are otherwise rather solitary occupying their own part of a stream or pond (Smith, 1961).

Tadpole and metamorphosis. Eggs hatch in 3 to 5 days (Clarkson and DeVos, 1986; Smith, 1956). Temperatures above 32°C have been shown to cause abnormalities in tadpoles and above 35.9°C to kill embryos (Howard, 1978a). Tadpole growth rates increase with increasing oxygen levels, food availability, and water temperature (Bury and Whelan, 1984). Tadpole gill ventilation at 20°C can generate a branchial water flow of almost 0.3 ml/g-min (Burggren and West, 1982). Metamorphosis from a tadpole to a frog can occur as early as 4 to 6 months in the southern parts of its range; however, most tadpoles metamorphose from 1 to 3 years after hatching, depending on latitude and temperature (DeGraaf and Rudis, 1983; Martof et al., 1980).

Home range and resources. The species' home range includes its foraging areas and refuges in and around aquatic environments. Home range size decreases with increasing bullfrog density, and males tend to use larger home ranges than females (Currie and Bellis, 1969). Bullfrogs tend to stay in the same pools throughout the summer months

if the water level is stable (Raney, 1940, cited in DeGraaf and Rudis, 1983). During the breeding season, adult males establish territories that they defend against conspecific males (Emlen, 1968). During the non-breeding season, Currie and Bellis (1969) found no evidence of territorial defense. Males often do not return to the same pond the following spring (Durham and Bennett, 1963).

Population density. During the breeding season, each breeding male may defend a few meters of shoreline (Currie and Bellis, 1969; Emlen, 1968). The densities of females and non-breeding males vary with time of day and season and are difficult to estimate. Tadpoles can be present locally in extremely high densities (Cecil and Just, 1979).

Population dynamics. Sexual maturity is attained in about 1 to 3 years after metamorphosis, depending on latitude (Howard, 1978a; Raney and Ingram, 1941, cited in Bury and Whelan, 1984). Only females that are at least 2 years past metamorphosis mate during the early breeding season; males and females 1 year past metamorphosis may breed during the later breeding periods (Howard, 1978a, 1981b). Also, some older females have been observed to mate and to lay a second clutch during the later breeding period (Howard, 1978a). Willis et al. (1956) estimated the minimum breeding length for females in Missouri to be 123 to 125 mm SVL. Mortality of tadpoles is high (Cecil and Just, 1979), and adult frogs are unlikely to live beyond 5 to 8 years postmetamorphosis (Howard, 1978b). In some areas, snapping turtles may be responsible for a large component of adult bullfrog mortality (Howard, 1981a).

Similar species (from general references)

- The pig frog (*Rana grylio*) is smaller than the bullfrog (8 to 14 cm) and is found in south South Carolina to south Florida and south Texas.

The remaining ranid species are more similar in size to the green (or bronze) frog. See Section 2.3.7 for a description of these frogs.

General references

Behler and King (1979); Bury and Whelan (1984); Conant and Collins (1991); DeGraaf and Rudis (1983); Smith (1961).

Bullfrog (*Rana catesbeiana*)

Factors	Age/Sex/ Cond./Seas.	Mean	Range or (95% CI of mean)	Location	Reference	Note No.
Body Weight (g)	B B	142.8 ± 77.4 SD	9.5 - 274.0	New Brunswick, Canada	McAlpine & Dilworth, 1989	1
	A B	249		central Arkansas	McKamie & Heidt, 1974	
	young tadpole	2.0 ± 1.1 SD		Kentucky	Viparina & Just, 1975	
	1-yr tadpole	35.7 ± 5.2 SD				
	post-emergence:					
	1 month	18	13 - 42	Louisiana/lab	Modzelewski & Culley, 1974	2
	2 months	30	19 - 52			
	3 months	42	27 - 77			
	4 months	56	41 - 101			
			total length:			
	at metamorph.	9	(84 mm)	east central Illinois	Durham & Bennett, 1963	
	1 yr B	91	(240 mm)			
	2 yr B	210	(307 mm)			
	3 yr B	240	(320 mm)			
	4 yr B	260	(335 mm)			
	5 yr B	290	(348 mm)			
	6 yr B	360	(356 mm)			
Metabolic Rate (lO_2/kg-d)	tadpole, 25°C	2.6 ± 0.2 SE		NS/lab	Burggren et al., 1983	3
	adult resting, 5°C	1.0	0.31 - 2.3	NS/NS	Hutchinson et al., 1968	4
Metabolic Rate (kcal/kg-d)	basal:				estimated	5
	2 mo (30 g)	9.1				
	1 yr (91 g)	7.0				
	B B (143 g)	6.3				
	A B (249 g)	5.5				

Bullfrog (*Rana catesbeiana*)

Factors	Age/Sex/ Cond./Seas.	Mean	Range or (95% CI of mean)	Location	Reference	Note No.
Food Ingestion Rate (g/g-d)	(13 - 42 g) (18 - 52 g) (28 - 77 g) (40 - 100 g)	0.071 0.059 0.040 0.033		Louisiana (24 - 27°C)	Modzelewski & Culley, 1974	
Surface Area (cm^2)	2 mo (30 g) 1 yr (91 g) B B (143 g) A B (249 g)	11 25 35 52			estimated	6

Dietary Composition		Summer	Fall	Winter			Note No.
adults: Decapoda-Astacidae Lepidoptera Coleoptera (Lampryidae) (Chrysomelidae) (Carabidae) Pulmonata-Zonitidae Chilipoda sand, rock, gravel		 47.7 19.0 16.0 (5.8) (5.8) (4.1) 8.3 7.7 1.2			Kentucky/NS (% wet volume; stomach contents)	Bush, 1959	
adults: plant animal (Odonata) (Coleoptera) (Hemiptera) (Hymenoptera) (Amphibia) unaccounted		 19.7 65.2 (8.8) (15.8) (0.5) (2.2) (26.4) 15.1			New York/mountain lake (% volume; stomach contents)	Stewart & Sandison, 1973	

Bullfrog (*Rana catesbeiana*)

Dietary Composition	Spring	Summer	Fall	Winter	Location/Habitat (measure)	Reference	Note No.
adults:					Missouri/bait minnow pond	Corse & Metter, 1980	
frogs	35	33	39				
tadpoles	8	11	0		(number of items found; stomach contents)		
shiners	305	157	25				
other fish	7	2	5				
Gastropoda	55	70	26				
crayfish	22	162	18				
other crustacea	71	42	47				
Arachnida	3	23	3				
Coleoptera (adult)	31	33	15				
Diptera (larvae)	2	7	0				
Hemiptera	41	43	16				

Population Dynamics	Age/Sex/ Cond./Seas.	Mean	Range or (95% CI of mean)			Note No.
Home Range Size (m radius)	A M nonbreed	2.9	0.76 - 11.3	Ontario, Canada/pond	Currie & Bellis, 1969	
	A F nonbreed	2.4	0.61 - 10.2			
	A M territory	2.7		Michigan/pond	Emlen, 1968	7
Population Density (N/ha)	B B (1960)	1,376		Ontario, Canada/pond	Currie & Bellis, 1969	
	B B (1961)	892				
	tadpoles:			Kentucky/pond	Cecil & Just, 1979	
	November	130,000				
	March	69,000				
	May	16,000				
Clutch Size		7,360 ± 741.7 SE	10,000 - 20,000	Kansas/NS New Jersey/pond	Smith, 1956 Ryan, 1980	
Clutches/Year	93% of F	1		Michigan/pond	Emlen, 1977	
	7% of F	2				
Days to Hatching		2 - 4		Arizona, California/river	Clarkson & DeVos, 1986	
		4 - 5		Kansas/NS	Smith, 1956	

Bullfrog (*Rana catesbeiana*)

Population Dynamics	Age/Sex/ Cond./Seas.	Mean	Range or (95% CI of mean)	Location/Habitat	Reference	Note No.
Age at Metamor-phosis	B	1 yr		Carolinas, Virginia/NS	Martof et al., 1980	
	B	1 - 2 yr		Michigan/pond	Collins, 1979	
	B	2 - 3 yr		New York/NS	Ryan, 1953	
	B	3 yr		Nova Scotia, Canada/NS	Bleakney, 1952	8
Age at Sexual Maturity	M	1 yr after metam.		Michigan/pond	Howard, 1978a	
	F	1 - 2 yr after metam.				
	B	1 - 2 yr after metam.		New York/NS	Ryan, 1953	
Annual Mortality Rates (%)	A M 1 - 2 yr	58		Michigan/pond	Howard, 1984	
	A M 2 - 3 yr	58				
	A M 3 - 4 yr	48				
	A M 4 - 5 yr	77				
Mortality Rates (%)	tadpoles (to metamorph.)	85.5	82.4 - 88.2	Kentucky/shallow ponds	Cecil & Just, 1979	
Longevity (yr)	A B		up to 5 - 8	Michigan/ponds	Howard, 1978b	
Seasonal Activity			End	Location	Reference	Note No.
Mating/Laying	February		October	southern range in N America	Behler & King, 1979	
	April	May	late June	California, Arizona	Clarkson & DeVos, 1986	
	May	late June	August	Missouri	Willis et al., 1956	
	late May	July	July	northern range in N America	DeGraaf & Rudis, 1983; Behler & King, 1979	
Metamor-phosis	August	(1st clutch)	October	California, Arizona	Clarkson & DeVos, 1986	
	March	(2nd clutch)	April	California, Arizona	Clarkson & DeVos, 1986	
	June	late June-Aug.	early October	Missouri	Willis et al., 1956	
	July		Sept., October	New York	Ryan, 1953	

Bullfrog (*Rana catesbeiana*)

Seasonal Activity	Begin	Peak	End	Location	Reference	Note No.
Hibernation	late October mid-October		late March March	east central Illinois Missouri	Durham & Bennett, 1963 Willis et al., 1956	

1 Mean snout-to-vent length (SVL) of frogs was 98 mm SVL and the range was 45 to 128 mm SVL.
2 Age postmetamorphosis; maintained at a temperature of 24 to 27°C and fed mosquitofish, crickets, and earthworms.
3 Restrained, cannulated; weight 5.7 g.
4 Mean weight of frogs was 74.8 g.
5 Estimated assuming temperature of 20°C using Equation 3-50 (Robinson et al., 1983). Body weights (1) for 2-month postmetamorphosis frog from Modzelewski and Culley (1974); (2) for a 1-year postmetamorphosis frog from Durham and Bennett (1963), Farrar and Dupre (1983); (3) for both juveniles and adults of both sexes, McAlpine and Dilworth (1989); and (4) for adults of both sexes, McKamie and Heidt (1974).
6 Estimated using Equation 3-24 (Hutchinson et al., 1968) and body weights as described in note 5.
7 Based on average distance between frogs.
8 Cited in Bury and Whelan (1984).

References (including Appendix)

Behler, J. L.; King, F. W. (1979) The Audubon Society field guide to North American reptiles and amphibians. New York, NY: Alfred A. Knopf, Inc.

Bleakney, J. S. (1952) The amphibians and reptiles of Nova Scotia. Can. Field-Nat. 66: 125-129.

Brooks, G. R., Jr. (1964) An analysis of the food habits of the bullfrog by body size, sex, month, and habitat. Va. J. Sci. 15: 173-186.

Bruneau, M.; Magnin, E. (1980) Croissance, nutrition, et reproduction des ouaouarons *Rana catesbeiana* Shaw (Amphibia Anura) des Laurentides au nord de Montreal. Can J. Zool. 58: 175-183.

Burggren, W. W.; West, N. H. (1982) Changing respiratory importance of gills, lungs and skin during metamorphosis in the bullfrog *Rana catesbeiana*. Physiol. Zool. 56: 263-273.

Burggren, W. W.; Feder, M. E.; Pinder, A. W. (1983) Temperature and the balance between aerial and aquatic respiration in larvae of *Rana berlandieri* and *Rana catesbeiana*. Physiol. Zool. 56: 263-273.

Bury, R. B.; Whelan, J. A. (1984) Ecology and management of the bullfrog. U.S. Fish Wildl. Serv. Resour. Publ. No. 155; 23 pp.

Bush, F. M. (1959) Foods of some Kentucky herptiles. Herpetologica 15: 73-77.

Carpenter, H. L.; Morrison, E. O. (1973) Feeding behavior of the bullfrog, *Rana catesbeiana*, in north central Texas. Bios 44: 188-193.

Cecil, S. G.; Just, J. J. (1979) Survival rate, population density and development of a naturally occurring anuran larvae (*Rana catesbeiana*). Copeia 1979: 447-453.

Clarkson, R. W.; DeVos, J. C., Jr. (1986) The bullfrog, *Rana catesbeiana* Shaw, in the lower Colorado River, Arizona-California. J. Herpetol. 20: 42-49.

Cohen, N. W.; Howard, W. E. (1958) Bullfrog food and growth at the San Joaquin Experimental Range, California. Copeia 1958: 223-225.

Collins, J. P. (1975) A comparative study of life history strategies in a community of frogs [Ph.D. dissertation]. Ann Arbor, MI: University of Michigan.

Collins, J. P. (1979) Intrapopulation variation in the body size at metamorphosis and timing of metamorphosis in the bullfrog. Ecology 60: 738-749.

Conant, R.; Collins, J. T. (1991) A field guide to reptiles and amphibians - eastern and central North America. Boston, MA: Houghton Mifflin Co.

Corse, W. A.; Metter, D. A. (1980) Economics, adult feeding and larval growth of *Rana catesbeiana* on a fish hatchery. J. Herpetol. 14: 231-238.

Currie, W.; Bellis, E. D. (1969) Home range and movements of the bullfrog, *Rana catesbeiana* (Shaw), in an Ontario pond. Copeia 1969: 688-692.

DeGraaf, R. M.; Rudis, D. D. (1983) Amphibians and reptiles of New England. Amherst, MA: University of Massachusetts Press.

Dowe, B. J. (1979) The effect of time of oviposition and microenvironment on growth of larval bullfrogs (*Rana catesbeiana*) in Arizona [master's thesis]. Tempe, AZ: Arizona State University.

Durham, L.; Bennett, G. W. (1963) Age, growth, and homing in the bullfrog. J. Wildl. Manage. 27: 107-123.

Ehrlich, D. (1979) Predation by bullfrog tadpoles (*Rana catesbeiana*) on eggs and newly hatched larvae of the plains leopard frog (*Rana blairi*). Bull. Md. Herpetol. Soc. 15: 25-26.

Emlen, S. T. (1968) Territoriality in the bullfrog, *Rana catesbeiana*. Copeia 1968: 240-243.

Emlen, S. T. (1976) Lek organization and mating strategies of the bullfrog. Behav. Ecol. Sociobiol. 1: 283-313.

Emlen, S. T. (1977) "Double clutching" and its possible significance in the bullfrog. Copeia 1977: 749-751.

Farrar, E. S.; Dupre, R. K. (1983) The role of diet in glycogen storage by juvenile bullfrogs prior to overwintering. Comp. Biochem. Physiol. A: Comp. Physiol. 75: 255-260.

Frost, S. W. (1935) The food of *Rana catesbeiana* Shaw. Copeia 1935: 15-18.

Fulk, F. D.; Whitaker, J. O., Jr. (1968) The food of *Rana catesbeiana* in three habitats in Owen County, Indiana. Indiana Acad. Sci. 78: 491-496.

George, I. D. (1940) A study of the bullfrog, *Rana catesbeiana* Shaw, at Baton Rouge, Louisiana [Ph.D. dissertation]. Ann Arbor, MI: University of Michigan.

Gibbons, J. W.; Semlitsch, R. D. (1991) Guide to the reptiles and amphibians of the Savannah River Site. Athens, GA: The University of Georgia Press.

Glass, M. L.; Burggren, W. W.; Johansen, K. (1981) Pulmonary diffusing capacity of the bullfrog (*Rana catesbeiana*). Acta Physiol. Scand. 113: 485-490.

Hammer, D. A.; Linder, R. L. (1971) Bullfrog food habits on a waterfowl production area in South Dakota. Proc. SD Acad. Sci. 50: 216-219.

Howard, R. D. (1978a) The influence of male-defended oviposition sites on early embryo mortality in bullfrogs. Ecology 59: 789-798.

Howard, R. D. (1978b) The evolution of mating strategies in bullfrogs, *Rana catesbeiana*. Evolution 32: 850-871.

Howard, R. D. (1981a) Sexual dimorphism in bullfrogs. Ecology 62: 303-310.

Howard, R. D. (1981b) Male age-size distribution and male mating success in bullfrogs. In: Alexander, R. D.; Tinkle, D. W., ed. Natural selection and social behavior: recent research and new theory; pp. 61-77.

Howard, R. D. (1984) Alternative mating behaviors of young male bullfrogs. Am. Zool. 24: 397-406.

Hutchinson, V. H.; Whitford, W. G.; Kohl, M. (1968) Relation of body size and surface area to gas exchange in anurans. Physiol. Zool. 41: 65-85.

Jaeger, R. G.; Hailman, J. P. (1976) Ontogenetic shift of spectral phototactic preferences in anuran tadpoles. J. Comp. Physiol. Psychol. 90: 930-945.

Korschgen, L. J.; Baskett, T. S. (1963) Foods of impoundment and stream dwelling bullfrogs in Missouri. Herpetologica 19: 89-97.

Korschgen, L. J.; Moyle, D. L. (1955) Food habits of the bullfrog in central Missouri farm ponds. Amer. Midl. Nat. 54: 332-341.

Lillywhite, H. B. (1970) Behavioral temperature regulation in the bullfrog, *Rana catesbeiana*. Copeia 1970: 158-168.

Martof, B. S.; Palmer, W. M.; Bailey, J. R.; et al. (1980) Amphibians and reptiles of the Carolinas and Virginia. Chapel Hill, NC: University of North Carolina Press.

McAlpine, D. F.; Dilworth, T. G. (1989) Microhabitat and prey size among three species of *Rana* (Anura: Ranidae) sympatric in eastern Canada. Can. J. Zool. 67: 2241-2252.

McAuliffe, J. R. (1978) Biological survey and management of sport-hunted bullfrog populations in Nebraska. Lincoln, NE: Nebraska Game and Parks Commission; 78 pp.

McKamie, J. A.; Heidt, G. A. (1974) A comparison of spring food habits of the bullfrog, *Rana catesbeiana*, in three habitats of central Arkansas. Southwest. Nat. 19: 107-111.

Modzelewski, E. H., Jr.; Culley, D. D., Jr. (1974) Growth responses of the bullfrog, *Rana catesbeiana* fed various live foods. Herpetologica 30: 396-405.

Oliver, J. A. (1955) The natural history of North American amphibians and reptiles. Princeton, NJ: Van Nostrand Co.

Raney, E. C. (1940) Summer movements of the bullfrog, *Rana catesbeiana* (Shaw), as determined by the jaw-tag method. Am. Midl. Nat. 23: 733-745.

Raney, E. C.; Ingram, W. M. (1941) Growth of tagged frogs (*Rana catesbeiana* Shaw and *Rana clamitans* Daudin) under natural conditions. Am. Midl. Nat. 26: 201-206.

Robinson, R. W.; Peters, R. H.; Zimmermann, J. (1983) The effects of body size and temperature on metabolic rate of organisms. Can. J. Zool. 61: 281-288.

Ryan, M. J. (1980) The reproductive behavior of the bullfrog (*Rana catesbeiana*). Copeia 1980: 108-114.

Ryan, R. A. (1953) Growth rates of some ranids under natural conditions. Copeia 1953: 73-80.

Smith, H. M. (1956) Handbook of amphibians and reptiles of Kansas. Univ. Kansas Mus. Nat. Hist. Misc. Publ. 9.

Smith, P. W. (1961) The amphibians and reptiles of Illinois. Ill. Nat. Hist. Surv. Bull. 28.

Stewart, M. M.; Sandison, P. (1973) Comparative food habits of sympatric mink frogs, bullfrogs, and green frogs. J. Herpetol. 6: 241-244.

Storer, T. I. (1922) The eastern bullfrog in California. Calif. Fish and Game 8: 219-224.

Treanor, R. R.; Nichola, S. J. (1972) A preliminary study of the commercial and sporting utilization of the bullfrog, *R. catesbeiana* Shaw in California. Calif. Dept. Fish and Game, Inland Fish. Admin. Rep. 72-4; 23 pp.

Turner, F. B. (1960) Postmetamorphic growth in anurans. Am. Midl. Nat. 64: 327-338.

Tyler, J. D.; Hoestenbach, R. D., Jr. (1979) Differences in food of bullfrogs (*Rana catesbeiana*) from pond and stream habitats in southwestern Oklahoma. Southwest. Nat. 24: 33-38.

Viparina, S.; Just, J. J. (1975) The life period, growth and differentiation of *Rana catesbeiana* larvae occurring in nature. Copeia 1975: 103-109.

Weathers, W. W. (1976) Influence of temperature acclimation on oxygen consumption, haemodynamics and oxygen transport in bullfrogs. Aust. J. Zool. 24: 321-330.

Willis, Y. L.; Moyle, D. L.; Baskett, T. S. (1956) Emergence, breeding, hibernation, movements and transformation of the bullfrog, *Rana catesbeiana*, in Missouri. Copeia 1956: 30-41.

Wright, A. H. (1914) North American Anura: life histories of the Anurans of Ithaca, New York. Washington, DC: Carnegie Institute; Publ. No. 197.

Wright, A. H.; Wright, A. A. (1949) Handbook of frogs and toads of the United States and Canada. Ithaca, New York: Comstock Publishing Co.

3. ALLOMETRIC EQUATIONS

Values for key contact rate factors such as food and water ingestion rates have been measured for few wildlife species. In this section, we describe allometric equations that can be used to estimate several exposure factors on the basis of animal body weight using models derived from taxonomically similar species. We emphasize, however, that measured values from well-conducted studies on the species of concern are likely to be more accurate and to have narrower confidence limits.

Allometry is defined as the study of the relationships between the growth and size of one body part to the growth and size of the whole organism; however, allometric relationships also exist between body size and other biological parameters (e.g., metabolic rate). The relationship between the physiological and physical parameters and body weight frequently can be expressed as:

$$Y = a\,Wt^{b} \pm \text{SE of } Y, \text{ or} \qquad [3\text{-}1]$$

$$\log Y = \log a + b \log Wt \pm \text{SE of } \log Y \qquad [3\text{-}2]$$

where Y is the biological characteristic to be predicted, Wt is the animal's body weight (mass), *a* and *b* are empirically derived constants, and SE is the standard error of the mean value of the parameter.

Equation 3-2 is the log transformation of Equation 3-1. Equation 3-2 represents a straight line, with *b* equal to the slope of the line and log *a* equal to the Y-intercept of the line. Values for *a* and *b* usually are determined empirically from measured values using linear regression analysis. Once values are determined for *a* and *b*, Equation 3-1 can be used to predict a value of Y from the body weight of the animal. The SE of Y is the standard error of the mean Y estimated for the mean of the Wt values; the SE of log Y is the standard error of the mean log Y estimated for the mean of the log Wt values.

Allometric equations can be used to estimate parameter values for species for which measured values are not available. The equations presented in this chapter, however, should not be used for taxonomic categories other than the category for which each was developed. For example, equations developed for iguanid lizards cannot be used for amphibians and should not be used for other groups of reptiles without careful evaluation of likely differences between the groups. It also is important to remember that the allometric equations presented in this chapter have been developed using mean values for a number of species within a taxonomic category. Individual species usually exhibit values somewhat different from those predicted by an allometric model based on several species. Furthermore, different-sized individuals within a species and individuals at varying stages of maturation are likely to exhibit a different allometric relationship between body weight and the dependent variable. For further discussion of within-species allometric equations related to growth and reproduction, see Reiss (1989).

In the next five sections, we describe empirically derived allometric equations that relate food ingestion rates (Section 3.1), water intake rates (Section 3.2), inhalation rates (Section 3.3), surface area (Section 3.4), and metabolic rate (Section 3.5) to body weight. As discussed above, most of the allometric models differ for birds, mammals, reptiles, and amphibians, and many also vary within these taxonomic groups. In Section 3.6, we provide a summary of operations involving logarithms and powers and unit conversion factors for those persons who may want to modify allometric equations found in the literature. Finally, in Section 3.7 we describe how to estimate 95-percent confidence intervals for food ingestion rates and free-living metabolic rates predicted on the basis of allometric equations presented in this chapter. We present most equations in the untransformed form only. For equations for which an investigator reported standard errors for the log transformation of the relationship, we present the equation both ways. For those persons interested in estimating confidence intervals for other allometric equations, Peters (1983) provides a simple review of how to estimate regression statistics for equations of the form of Equation 3-2. Section 3.8 contains the references for this chapter.

3.1. FOOD INGESTION RATES

Food ingestion rates vary with many factors, including metabolic rate, the energy devoted to growth and reproduction, and composition of the diet. The metabolic rate of free-ranging animals is a function of several factors, including ambient temperature, activity levels, and body weight. In birds and mammals, thermoregulation can considerably increase an animal's metabolic requirements during the winter, whereas reproductive efforts can replace thermoregulation as the predominant extra metabolic expenditure in the spring and summer. Many reptiles and amphibians, on the other hand, drop their activity levels and metabolic rates in the winter.

For homeotherms (i.e., animals that maintain a relatively constant body temperature such as most birds and mammals), metabolic rate generally decreases with increasing body mass (see Section 3.5). The smallest birds and mammals must consume quantities of food equal to their body weight or more daily; in contrast, the larger homeotherms may consume only a small fraction of their body weight in food daily. Herbivores tend to consume larger quantities of food than carnivores because of the lower energy content of their food. Ingestion rates, expressed in units of food energy normalized to body size (e.g., kcal/kg-day), are not significantly different for herbivores and carnivores (Peters, 1983). Four-legged poikilotherms (those animals whose usual body temperatures are the same as that of their environment, such as reptiles and amphibians) exhibit the same slope of decreasing ingestion rates per unit body weight with increasing body size but show a lower intercept (i.e., lower ingestion rate for a given body weight) than homeotherms (Nagy, 1987).

The rate of food consumption that an animal must achieve to meet its metabolic needs can be calculated by dividing its free-living (or field) metabolic rate (FMR) (see Section 3.5) by the metabolizable energy in its food (Nagy, 1987). Metabolizable energy (ME) is the gross energy (GE) in a unit of food consumed minus the energy lost in feces and urine. Assimilation efficiency (AE) equals the ratio ME/GE, or the fraction of GE that is metabolizable. AE is relatively constant among different groups of consumer species of mammals and birds that are all either carnivorous, insectivorous, herbivorous, or

granivorous (Hume, 1982; Peters, 1983; Nagy, 1987; Robbins, 1983). Nagy (1987) calculated the mean ME (i.e., kilojoules of ME per gram of dry matter) of various diets for birds and mammals from average values of AE for birds and mammals and typical GE contents of those diets as reported by Golley (1961) and Robbins (1983). These values are presented in Table 3-1. (For more information on ME and AE, see Section 4.1.2.) Using the values presented in Table 3-1, Nagy (1987) developed allometric equations for food ingestion (FI) rates as a function of body weight (Wt) for birds, mammals, and lizards using estimated FMRs and general dietary composition. In the remainder of this section, we present these equations for birds (Section 3.1.1) and mammals (Section 3.1.2). Section 3.1.3 summarizes Nagy's food ingestion allometric equations for iguanid lizards. We report this information even though no iguanid lizards were among our selected species because it is the only information of this type we identified for any amphibian or reptile.

Nagy's (1987) estimates of FMR are based on doubly labeled water measurements of CO_2 production in free-living animals. When performed correctly, this method is more accurate for estimating the metabolic rate of free-living animals than other methods commonly used (King, 1974). Other allometric equations for food ingestion rates that we identified in the open literature are based largely on captive animals without corrections for the additional energy requirements of free-living animals. For more accurate estimates of food ingestion rates by type of diet, we recommend following the procedures outlined in Section 4.1.2 instead of using these generic equations.

3.1.1. Birds

For birds, Nagy (1987) calculated FI rates (in grams dry matter per day) from ME and FMR and developed the following equations:

$$FI\ (g/day) = 0.648\ Wt^{0.651}\ (g),\ \text{or} \qquad \text{all birds} \qquad [3\text{-}3]$$
$$FI\ (kg/day) = 0.0582\ Wt^{0.651}\ (kg)$$

$$FI\ (g/day) = 0.398\ Wt^{0.850}\ (g) \qquad \text{passerines} \qquad [3\text{-}4]$$

Table 3-1. Metabolizable Energy (ME) of Various Diets for Birds and Mammals

Diet	Metabolizable Energy (kJ/g)[a]	(kcal/g)[a]	Animal Group
insects	18.7	= 4.47	mammals
	18.0	= 4.30	birds
fish	18.7	= 4.47	mammals
	16.2	= 3.87	birds
vegetation	10.3	= 2.26	mammals
seeds	18.4	= 4.92	mammals
nectar	20.6	= 4.92	hummingbirds
omnivory	14	= 3.35	mammals and birds

[a]g = grams dry weight.
Source: Nagy, 1987.

$$FI\ (g/day) = 0.301\ Wt^{0.751}\ (g) \qquad \text{non-passerines} \qquad [3\text{-}5]$$

$$FI\ (g/day) = 0.495\ Wt^{0.704}\ (g) \qquad \text{seabirds} \qquad [3\text{-}6]$$

where Wt equals the body weight (wet) of the animal in grams (g) or kilograms (kg) as indicated. We provide the regression statistics for these equations (including sample size and regression coefficient) and information required to estimate a 95-percent confidence interval for an FI rate predicted for a specified body weight in Section 3.7. More accurate estimates of food requirements can be made from estimates of FMR (Section 3.5), dietary composition, and AE for the species of interest, as outlined in Section 4.1.2.

3.1.2. Mammals

For placental mammals, Nagy (1987) calculated FI rates (in grams dry matter per day) from ME and FMR values and developed the following equations:

$FI\ (g/day) = 0.235\ Wt^{0.822}\ (g)$, or — all mammals — [3-7]
$FI\ (kg/day) = 0.0687\ Wt^{0.822}\ (kg)$

$FI\ (g/day) = 0.621\ Wt^{0.564}\ (g)$ — rodents — [3-8]

$FI\ (g/day) = 0.577\ Wt^{0.727}\ (g)$ — herbivores — [3-9]

We provide the regression statistics for these equations (including sample size and regression coefficient) and information required to estimate a 95-percent confidence interval for an FI rate predicted for a specified body weight in Section 3.7. More accurate estimates of food requirements can be made from estimates of FMR (Section 3.5), dietary composition, and AE for the species of interest, as outlined in Section 4.1.2.

Herbivores tend to consume more food than carnivores or omnivores on a dry-weight basis because of the lower energy content of the herbivores' diets. On an energy basis (e.g., kilocalories), the ingestion rates of carnivores and herbivores are not significantly different (Farlow, 1976):

$FI\ (kjoule/day) = 971\ Wt^{0.73}\ (kg)\ (r^2 = 0.942)$, or — herbivores — [3-10]
$FI\ (kcal/day) = 1.518\ Wt^{0.73}\ (g)$

$FI\ (kjoule/day) = 975\ Wt^{0.70}\ (kg)\ (r^2 = 0.968)$, or — carnivores — [3-11]
$FI\ (kcal/day) = 1.894\ Wt^{0.70}\ (g)$

3.1.3. Reptiles and Amphibians

This section summarizes food ingestion allometric equations for iguanid lizards, which is the only information of this type we identified for any amphibian or reptile. Nagy (1987) calculated FI rates (in grams dry matter per day) from ME and FMR values on spring and summer days and developed the following equations:

$$FI\ (g/day) = 0.019\ Wt^{0.841}\ (g) \qquad \text{herbivores} \qquad [3\text{-}12]$$

$$FI\ (g/day) = 0.013\ Wt^{0.773}\ (g) \qquad \text{insectivores} \qquad [3\text{-}13]$$

Again, on an energy basis, carnivores and herbivores are not significantly different and can be represented by a single relationship:

$$FI\ (kjoule/day) = 0.224\ Wt^{0.799}\ (g), \text{ or} \qquad \text{all iguanids} \qquad [3\text{-}14]$$
$$FI\ (kcal/day) = 0.054\ Wt^{0.799}\ (g)$$

We provide the regression statistics for these equations (including sample size and regression coefficient) and information required to estimate a 95-percent confidence interval for an FI rate predicted for a specified body weight in Section 3.7. More accurate estimates of food requirements for these and other groups of reptiles and amphibians can be made from estimates of FMR (Section 3.5), dietary composition, and AE for the species of interest, as outlined in Section 4.1.2.

Allometric equations for FI rates for other groups of reptiles and amphibians were not found. For other groups, we recommend estimating FI rates from FMR and diet, as described in Section 4.1.2.

3.2. WATER INTAKE RATES

Daily water requirements depend on the rate at which animals lose water to the environment due to evaporation and excretion. Loss rates depend on several factors, including body size, ambient temperature, and physiological adaptations for conserving water. Drinking water is only one way in which animals may meet their water requirements. All animals produce some water as a product of their metabolism. The degree to which metabolic water production and dietary water content can satisfy an animal's water requirements varies from species to species and with environmental conditions. Extensive literature describes the allometry of total water flux for various

groups of animals. Allometric models to predict drinking water intake, on the other hand, are limited.

3.2.1. Birds

Based on measured body weights and drinking water values from Calder (1981) and Skadhauge (1975), Calder and Braun (1983) developed an equation for drinking water ingestion (WI) for birds:

$$WI\ (L/day) = 0.059\ Wt^{0.67}\ (kg) \qquad \text{all birds} \qquad [3\text{-}15]$$

where Wt equals the average body weight in kilograms (kg) of the bird species. This equation is based on data from 21 species of 11 to 3,150 g body weight. Total water turnover should be proportional to metabolic rate (body weight to the 3/4 power, see Section 3.5.2.1). The exponent for Equation 3-15 is not significantly different from 0.75 (Calder and Braun, 1983). Additional sources of water not accounted for in this equation (metabolic water and water contained in food) also help to balance the animals' daily water losses. For allometric equations for total water flux (including water obtained from food) for birds, see Nagy and Peterson (1988).

To estimate daily drinking water intake as a proportion of an animal's body weight (e.g., as g/g-day), the WI rate estimated above is divided by the animal's body weight in kg:

$$\begin{aligned} WI\ (g/g\text{-}day) &= WI\ (kg/kg\text{-}day), \text{ or} \\ &= WI\ (L/day)\ /\ Wt\ (kg) \end{aligned} \qquad [3\text{-}16]$$

In general, birds drink less water than do mammals of equivalent body weights. Because of their relatively high metabolic rates, the quantity of metabolic water produced by birds is greater in relationship to body size than that produced by other vertebrates (Bartholomew and Cade, 1963). In addition, birds are able to conserve water by excreting nitrogen as uric acid instead of urea (as excreted by mammals); uric acid can be excreted

in a semi-solid suspension, whereas urea must be excreted in aqueous solution. On the other hand, birds exhibit a high rate of water loss from the respiratory system and use panting and evaporative water loss to prevent overheating at high ambient temperatures. For example, Dawson (1954) found evaporative losses in two species of towhees to increase fourfold between 30 and 40°C.

Although birds may satisfy some of their water needs by oxidative food metabolism, it has not been demonstrated that any normally active bird can satisfy its water requirements with metabolic water alone (Bartholomew and Cade, 1963). The balance must be obtained from water contained in foods such as insects or succulent plant material and from drinking water.

As would be expected, birds drink more water at warmer temperatures to make up for evaporative losses. Seibert (1949) found that juncos (weighing 16 to 18 g) consumed an average of 11 percent of their body weight in water daily at an ambient temperature of 0°C, 16 percent at 23°C, and 21 percent at 37°C. The white-throated sparrow increased water consumption from 18 percent of its body weight at 0°C to 27 percent at 23°C and 44 percent at 37°C.

Water consumption rates per unit body weight also tend to decrease with increasing body weight within a species. For example, in white leghorn chickens, water intake per gram of body weight is highest in the youngest chicks (45 percent of the body weight at 1 week when chicks average 62 g) and decreases with age thereafter (13 percent of the body weight at 16 weeks when chicks average 2.0 kg) until egg-laying, when water consumption increases for the production of eggs (24 percent of the body weight for laying hens) (Medway and Kare, 1959).

Some species obtain more of their daily water needs from their diet and therefore drink less water than others; therefore, measured water ingestion values from well-conducted studies should be used when available. In the absence of measured values, Equation 3-15 should provide a reasonable central value. Additional information required to estimate a 95-percent confidence interval was not provided along with this equation.

3.2.2. Mammals

Based on measured body weights and drinking water values from Calder (1981) and Skadhauge (1975), Calder and Braun (1983) developed an allometric equation for drinking water ingestion (WI) for mammals:

$$WI\ (L/day) = 0.099\ Wt^{0.90}\ (kg) \qquad \text{all mammals} \qquad [3\text{-}17]$$

where Wt equals the average body weight in kilograms (kg). Additional sources of water not accounted for in this equation (i.e., metabolic water and water contained in food) help to balance the animals' daily water losses. The empirically determined exponent of 0.90 does not suggest a simple physiological explanation. If total water turnover (metabolic water combined with water obtained from food) is proportional to metabolic rate (body weight to the 3/4 power, see Section 3.5.2.1), then drinking water ingestion would be expected to scale similarly, as was the case for birds (see Section 3.2.1). For allometric equations relating body weight to total water flux (including water obtained from food) for mammals, see Nagy and Peterson (1988).

To normalize drinking water intake to body weight (e.g., as g/g-day; see Chapter 4, Equation 4-4), the WI rate estimated above is divided by the animal's body weight in kg:

$$NWI\ (g/g\text{-}day) = WI\ (kg/kg\text{-}day),\ \text{or} \qquad [3\text{-}18]$$
$$= WI\ (L/day)\ /\ Wt\ (kg)$$

We present normalized drinking water intakes in the species profiles.

3.2.3. Reptiles and Amphibians

Allometric equations relating body weight to drinking water ingestion rates were not identified for reptiles and amphibians. The water balance of these groups is complex, in part because they can absorb water through their skin as well as drink water and extract water from their food (Duellman and Trueb, 1986; Minnich, 1982). The relative

contribution of these three routes of water intake depends on the species, habitat, temperature, and body surface area. In general, the skin of reptiles is less permeable than that of amphibians. Aquatic turtles (e.g., snapping turtle, painted turtle) also may ingest large amounts of water when feeding on aquatic plants and animals; however, the magnitude of such ingestion has not been quantified (Mahmoud and Klicka, 1979). For further discussion of water balance for these groups, see Duellman and Trueb (1986), Feder and Burggren (1992), Minnich (1982), and Nagy and Peterson (1988).

3.3. INHALATION RATES

Inhalation rate is one of the respiratory parameters needed to estimate potential exposure of wildlife to airborne contaminants. Inhalation rates vary with species, body size, body temperature, ambient temperature, and activity levels. When inhalation rate is increased, either because of increased activity levels or to promote evaporative cooling, exposure to airborne contaminants may be increased. As discussed in Section 4.1.4, an inhalation toxicologist should be consulted when assessing this pathway because additional respiratory parameters also must be considered (see U.S. EPA, 1990).

3.3.1. Birds

Lasiewski and Calder (1971) developed an allometric relationship for inhalation rate (IR) associated with standard metabolism (i.e., post-digestive, at rest) for non-passerine birds (N = 6 species ranging in weight from 43 to 88,000 grams). They excluded passerines, which have a somewhat higher metabolic rate than non-passerines (see Section 3.5):

$$IR\ (ml/min) = 284\ Wt^{0.77}\ (kg),\ \text{or} \qquad \text{all non-passerines} \qquad [3\text{-}19]$$

$$IR\ (m^3/day) = 0.4089\ Wt^{0.77}\ (kg),\ \text{or}$$

$$IR\ (m^3/day) = 0.002002\ Wt^{0.77}\ (g)$$

As noted above, these inhalation rates were associated with standard metabolic rates. Free-living metabolic rates are likely to be higher by a factor of at least 2 or 3 (see Section

3.5); therefore, IRs estimated from these equations should be adjusted accordingly (e.g., multiplied by 2 or 3) although IRs might not be directly proportional to metabolic rate.

3.3.2. Mammals

Using measured values from several reports of respiration rates in mammals (covering 691 data points), Stahl (1967) developed an allometric relationship for inhalation rate with body size for mammals (N = 691, r = 0.98, SE Y = 45):

$$IR\ (ml/min) = 379\ Wt^{0.80}\ (kg),\ or \qquad \text{all mammals} \qquad [3\text{-}20]$$
$$IR\ (m^3/day) = 0.5458\ Wt^{0.80}\ (kg),\ or$$
$$IR\ (m^3/day) = 0.002173\ Wt^{0.80}\ (g)$$

As for the equations given for birds, these IRs were associated with standard metabolic rates. Field metabolic rates are likely to be higher by a factor of at least 2 or 3 (see Section 3.5); therefore, IRs determined from these equations should be adjusted accordingly (e.g., multiplied by 2 or 3, although IRs may not be directly proportional to metabolic rate).

3.3.3. Reptiles and Amphibians

In contrast to the fairly regular breathing patterns of most birds and mammals, most reptiles breath air in distinct episodes. They may take single breaths, or exhibit an episode of several breaths, and then hold their breath for varying lengths of time (Milsom and Chan, 1986). Inhalation rate varies for reptiles and amphibians not only with body size and activity level, as for birds and mammals, but also with body temperature. Some gas exchange occurs normally through the integument of both reptiles and amphibians (Duellman and Trueb, 1986; Lillywhite and Maderson, 1982). Moreover, for semiaquatic species, a significant proportion of gas exchange can occur underwater through the skin, reducing the need to inspire air (Seymour, 1982). For example, in adult bullfrogs, gas exchange through the skin can account for 18 percent of total oxygen uptake (Burggren and West, 1982). Given the complexity of the subject, we refer those interested in

inhalation exposures for reptiles or amphibians to more specific treatments of these topics (e.g., Duellman and Trueb, 1986; Feder and Burggren, 1992; Gans and Dawson, 1976; Jackson, 1979; Hutchinson et al., 1968; Lillywhite and Maderson, 1982).

3.4. SURFACE AREAS

The degree to which an animal may absorb contaminants through direct contact with its skin depends on many factors, including the surface area of the skin available for contact. Summarizing measured surface areas for more than 100 animals reported by Hemmingsen (1960), Schmidt-Nielsen (1970, 1972) determined that animals have surface areas that usually are approximately twice that of a sphere of the same weight (assuming a specific gravity of 1 for both the sphere and the animal). The permeability of an animal's skin to contaminants, however, depends on characteristics of the skin (e.g., presence of keratinized scales) as well as the contaminant (e.g., molecule size, lipophilicity). This section presents allometric equations for estimating skin surface area; characteristics affecting skin permeability are not discussed.

3.4.1. Birds

In studies of avian thermal biology, skin surface area is commonly estimated using Meeh's (1879, cited in Walsberg and King, 1978) formula with Rubner's (1883, cited in Walsberg and King, 1978) constant of 10:

$$SA_{skin}\ (cm^2) = 10\ Wt^{0.667}\ (g) \qquad \text{all birds} \qquad [3\text{-}21]$$

where SA_{skin} is the skin surface area beneath the feathers and Wt is body weight (Walsberg and King, 1978). Although Rubner's constant of 10 was derived originally from domestic fowl, Drent and Stonehouse (1971) have verified the formula for birds in a variety of taxa and of weights spanning three orders of magnitude. For passerines, beak surface area tends to be about 1 percent (range 0.7 percent to 1.6 percent of 10 passerine species) of skin surface area, and leg surface area about 7 percent (range 5.9 percent to

7.9 percent of 10 passerine species) (Walsberg and King, 1978). These ratios would be expected to vary for many non-passerines (e.g., herons, woodcock).

3.4.2. Mammals

Summarizing data from more than 100 mammals, Stahl (1967) developed a relationship between surface and body weight:

$$SA_{skin}\ (m^2) = 0.11\ Wt^{0.65}\ (kg), \text{ or} \qquad \text{all mammals} \qquad [3\text{-}22]$$
$$SA_{skin}\ (cm^2) = 12.3\ Wt^{0.65}\ (g)$$

This relationship is very similar to that developed for birds (Equation 3-21).

3.4.3. Reptiles and Amphibians

Surface area has been found to be a different function of body weight for adult amphibians than for birds or mammals (Hutchinson et al., 1968; Whitford and Hutchinson, 1967):

$$SA_{skin}\ (cm^2) = 1.131\ Wt^{0.579}\ (g) \qquad \text{all frogs} \qquad [3\text{-}23]$$

$$SA_{skin}\ (cm^2) = 0.953\ Wt^{0.725}\ (g) \qquad \text{bullfrog} \qquad [3\text{-}24]$$

$$SA_{skin}\ (cm^2) = 0.997\ Wt^{0.712}\ (g) \qquad \text{green frog} \qquad [3\text{-}25]$$

$$SA_{skin}\ (cm^2) = 8.42\ Wt^{0.694}\ (g) \qquad \text{salamanders} \qquad [3\text{-}26]$$

Models by which to estimate surface areas for turtles (exclusive of the shell and plastron) and snakes were not found. The general formula for the surface area of a cylinder can be used to approximate the surface area of a snake if the length and girth are known or estimated.

3.5. ALLOMETRIC EQUATIONS FOR METABOLIC RATE

The allometric equations for estimating food ingestion rates provided in Section 3.1 were derived using very simple assumptions about the energetic content and digestibility of the diet for the species included in the regression equations. Consequently, the equations will provide only very rough estimates of food ingestion rates for any given species. For a site-specific exposure assessment, it may be more appropriate to evaluate ingestion rates for a diet that is likely to represent the species and study area. The caloric content and percent water, fat, and protein of wildlife diets vary not only among species, but also among individuals within the same species depending on factors such as location, time of year, age, and sex. If one can estimate the energetic requirements of the animal in the field and its dietary composition for a specified situation, one can estimate food ingestion rates for that diet and situation. In the remainder of this section, we discuss metabolic rate and provide allometric equations to estimate field free-living metabolic rates (FMRs) for wildlife species. Chapter 4 describes how to use FMR estimates and information about the energy content of specific diets to estimate food ingestion rates.

Several factors influence metabolic rates of free-ranging animals, including body size, body temperature, and type and level of activity. For homeotherms, metabolic energy must be expended to keep core body temperature within relatively narrow limits. At moderate ambient temperatures, homeotherms lose heat to the surrounding environment as rapidly as they gain it and therefore need not expend extra metabolic energy to maintain core body temperature. That range of ambient temperatures over which an animal's metabolic rate is at a minimum and constant level is called the thermoneutral zone. Below the thermoneutral zone, the organism loses heat to the environment and must increase its metabolic activity to compensate. Above the thermoneutral zone, the organism gains heat from its environment and must increase its metabolic rate to use evaporation to cool its body.

Thermoneutral zones vary somewhat among species depending upon the insulating properties and color of the fur or feathers, surface-to-volume ratios, and other factors. The degree to which metabolic rate increases with changes in ambient temperature outside of

the thermoneutral zone is referred to as the temperature coefficient (TC). Temperature coefficients also vary with body size, insulation, and other factors.[a]

There are several ways to measure and express metabolic rate, including basal metabolic rate (BMR), resting metabolic rate (RMR), existence metabolic rate (EMR), average daily metabolic rate (ADMR), and free-living or field metabolic rate (FMR). The different measures are distinguished by the range of animal activities included in the measure:

- Basal metabolic rate (BMR), also sometimes labeled standard metabolic rate (SMR), represents the minimal value of heat production for homeotherms. BMR must be measured within the thermoneutral zone of ambient temperatures when the animal is at rest and in a post-absorptive state (i.e., all food has been digested) (Gessaman, 1973).

- Standard metabolic rate (SMR) has been used in the literature in more than one way. Many authors define SMR as BMR (see above). Others use SMR if the thermoneutral zone has not been defined so that some cost of thermoregulation may be included (Bennett and Harvey, 1987).

- Resting metabolic rate (RMR) is usually measured at temperatures below the thermoneutral zone when the animal is at rest, but *not* post-absorptive (i.e., the animal is eating regularly and may be expending energy to digest its food). The RMR exceeds the BMR by the heat liberated in the digestion of food (i.e., the specific dynamic action, or SDA) and by some cost of thermoregulation. RMR and BMR are usually measured using indirect calorimetry (i.e., oxygen consumption and carbon dioxide production) over a period of 1 to 3 hours.

---

[a]Water has a much higher heat conductance than air. When submerged or swimming, the degree to which metabolic rate increases with decreasing water temperature depends on the animal's insulation (e.g., whether the fur traps an air layer next to the skin over part or all of the body or whether there is an insulative layer of blubber), duration of submergence, and body size.

- Existence metabolic rate (EMR) is the metabolic rate necessary for an animal to maintain itself in captivity without a change in body weight. EMR is greater than RMR due to the cost of locomotor and other activities required for self-maintenance. Most researchers measure EMR on the basis of food consumption and energy excretion at a constant weight over the period of several days or weeks (Kendeigh, 1969).

- Average daily metabolic rate (ADMR) is usually measured over 24 hours at a temperature similar to the animal's natural environment and with food and water available *ad libitum*. ADMR is the sum of BMR and the metabolic costs of thermoregulation, digestion, and daily activities.

- Free-living or field metabolic rate (FMR) can be measured using doubly-labeled water, and it represents the total daily energy requirement for an animal in the wild. FMR includes the costs of BMR, SDA, thermoregulation, locomotion, feeding, predator avoidance, alertness, posture, and other energy expenditures. Various models and measures have indicated that a constant value of approximately three times BMR is a reasonable estimate of FMR for birds and mammals (Lamprey, 1964; Buechner and Golley, 1967; Koplin et al., 1980), although more precise estimates also have been developed (see Sections 3.5.1.3, 3.5.2.3, and 3.5.3.2).

FMR also has been used in the literature to represent fasting metabolic rate (e.g., Gessaman, 1973), but we do not discuss fasting metabolic rate estimates in this Handbook.

The relationships between metabolic rate and body weight fall into two broad categories: those for homeothermic animals (i.e., most birds and mammals), and those for poikilothermic animals (i.e., most reptiles and amphibians). For poikilotherms, metabolic rate must be related to body temperature. It also is important to remember that poikilotherms can adjust their body temperatures relative to ambient temperatures

somewhat by modifying their behavior (e.g., basking in the sun, adopting postures to minimize or maximize absorption of solar radiation).

Allometric models relating metabolic rate to body size for birds and mammals are described in Sections 3.5.1 and 3.5.2, respectively. Allometric models for reptiles and amphibians are described in Section 3.5.3. We have attempted to identify the most accurate allometric equations currently available for estimating free-living metabolic rates. We also present allometric equations for basal and existence metabolism, which in combination with appropriate information on activity budgets and energy costs can be used to estimate field metabolic rates. Furthermore, measures of basal and existence metabolism are available for considerably more species than are measures (or estimates) of free-living metabolic rates. Consequently, more allometric models have been developed that distinguish the metabolic rate-weight relationship among taxonomic groups using measures of basal and existence metabolism than using measures of field metabolic rates. We caution users to pay close attention to the units for the parameters in the allometric equations. For most equations, energy is expressed as kcal (with the exception of some equations for reptiles and amphibians). Mass may be expressed either in g or kg, depending on how the equation was reported.

We emphasize that the literature on allometric relationships and metabolic rate is extensive and complex. We provide a very simplified overview that should be of assistance for screening-level exposure assessments only. For additional information on methods of estimating metabolic costs of free-ranging animals, please consult expert reviews on the subject (e.g., Bennett and Dawson, 1976; Bennett and Harvey, 1987; Ellis, 1984; Gans and Dawson, 1976; Gessaman, 1973; Kendeigh et al., 1977; King, 1974; Peters, 1983; Robinson et al., 1983; Wiens, 1984).

3.5.1. Birds

In birds, metabolic rate generally decreases with increasing body mass. Several authors have found passerine birds to have higher metabolic rates overall for their body size than non-passerines (Lasiewski and Dawson, 1967; Nagy, 1987; Kendeigh, 1970;

Zar, 1968). In this section, we present allometric models for three measures of metabolic rate on the basis of body size in birds: basal metabolic rate (BMR), existence metabolic rate (EMR), and field metabolic rate (FMR). All equations take the general form of $Y = aWt^b$, but can also be represented in their log-transformed form (the equation of a straight line). We conclude this section by discussing the influence of ambient temperature on avian metabolic rates. Additional information required to estimate a 95-percent confidence interval (CI) for a predicted FMR (the expression of metabolic rate that is generally most appropriate for wildlife exposure assessments) is provided in Section 3.7.

3.5.1.1. Basal Metabolic Rate

Several investigators have derived values for the constants *a* and *b* for the equation relating BMR to body weight (Wt) from empirical data on birds. Lasiewski and Dawson (1967) compiled body weight and BMR for almost 100 species of birds. They found BMR for passerines to be higher than BMR for non-passerines (i.e., the Y-intercept for passerines is higher than the Y-intercept for non-passerines):

<u>Passerines</u>

$$\log \text{BMR (kcal/day)} = 2.11 + 0.724 \log \text{Wt (kg)} \pm 0.113, \text{ or} \qquad [3\text{-}27]$$

$$\text{BMR (kcal/day)} = 128\ \text{Wt}^{0.724}\ \text{(kg)}$$

<u>Non-passerines</u>

$$\log \text{BMR (kcal/day)} = 1.89 + 0.723 \log \text{Wt (kg)} \pm 0.068, \text{ or} \qquad [3\text{-}28]$$

$$\text{BMR (kcal/day)} = 77.6\ \text{Wt}^{0.723}\ \text{(kg)}$$

Ellis (1984) found the Y-intercept for seabirds[b] to be somewhat higher than the Y-intercept for non-passerines determined by Lasiewski and Dawson (1967):

---

[b]Seabirds included penguins, albatross, petrels, shearwaters, pelicans, skuas, gulls, terns, noddys, murres, cormorants, and frigatebirds.

Seabirds

log BMR (kcal/day) = 1.96 + 0.721 log Wt (kg) (no SE provided), or [3-29]

BMR (kcal/day) = 91.2 $Wt^{0.721}$ (kg)

Zar (1968) reexamined the data compiled by Lasiewski and Dawson (1967) and developed models for relating BMR to body weight (kg) for several orders and families of birds (Table 3-2). These may be used to estimate whether the FMR for a species of interest is likely to fall above or below that predicted on the basis of the allometric equations derived for "all birds."

3.5.1.2. Existence Metabolic Rates

Kendeigh (1970) developed allometric equations for EMRs as a function of weight (Wt) at 30°C separately for passerines and for non-passerines. As was the case for BMRs, passerines showed higher EMRs than did non-passerines:

Passerines (N = 15 species)

log EMR (kcal/day) = 0.1965 + 0.6210 log Wt (g) ± 0.0633, or [3-30]

EMR (kcal/day) = 1.572 $Wt^{0.6210}$ (g), or

log EMR (kcal/day) = 2.060 + 0.6210 log Wt (kg), or

EMR (kcal/day) = 114.8 $Wt^{0.6210}$ (kg)

Non-passerines (N = 9 species)

log EMR (kcal/day) = -0.2673 + 0.7545 log Wt (g) ± 0.0630, or [3-31]

EMR (kcal/day) = 0.5404 $Wt^{0.7545}$ (g), or

log EMR (kcal/day) = 1.996 + 0.7545 log Wt (kg), or

EMR (kcal/day) = 99.03 $Wt^{0.7545}$ (kg), or

The average increase of EMR at 30°C over BMR is 31 and 26 percent in passerine and non-passerine species, respectively (Kendeigh, 1970). At 0°C, on the other hand, EMR of passerine and non-passerine species is similar, indicating that non-passerines are affected

Table 3-2. Allometric Equations for Basal Metabolic Rate (BMR) in Birds[a]

Avian group	Number of data points	a	log a	b	SE[b] of mean BMR	SE[b] of mean log BMR
Apodiformes	9	114	2.06	0.769	0.201	0.0558
Strigiformes	7	66.4	1.82	0.69	11.1	0.0989
Columbiformes	10	92.1	1.96	0.858	2.68	0.0491
Galliformes	13	72.6	1.86	0.698	15.3	0.0904
Falconiformes	5	65.3	1.82	0.648	45.3	0.108
Anseriformes	9	95.8	1.98	0.634	23.4	0.0524
Ciconiiformes	7	86.9	1.94	0.737	22.0	0.0464
Passeriformes	48	129	2.11	0.724	8.71	0.0806
Corvidae	8	126	2.10	0.709	23.3	0.147
Ploeceidae	17	164	2.21	0.794	1.40	0.0808
Fringillidae	19	125	2.10	0.714	1.02	0.0473
All Nonpasserines	72	78.5	1.90	0.723	42.8	0.111
All Species	120	86.3	1.94	0.668	52.8	0.133

[a]Values for the equation relating BMR to body weight (Wt): log BMR (kcal/day) = log a + b log Wt (kg).
[b]Estimated from the mean log Wt used to develop the allometric equation.
Source: Zar, 1968.

more by cold than passerines. Kendeigh (1970) estimated the equation for all bird species (N = 24) at 0°C to equal:

<u>All birds (24 species)</u>

$$\log \text{EMR (kcal/day)} = 0.6372 + 0.5300 \log \text{Wt (g)} \pm 0.0613, \text{ or} \qquad [3\text{-}32]$$

$$\text{EMR (kcal/day)} = 4.337\ \text{Wt}^{0.5300}\ \text{(g)}$$

The equations also indicate that smaller species are affected more by cold than are larger species. The slopes of the regression lines for EMR on body weight is less steep at 0°C than at 30°C, indicating that small birds must increase heat production more than large birds to regulate body temperature during cold weather.

To normalize EMR to body weight, divide the daily EMR by body weight:

NEMR (kcal/kg-day) = EMR (kcal/day) / Wt (kg) [3-33]

3.5.1.3. Free-Living Metabolic Rate

FMRs have been measured using doubly-labeled water (DLW) to measure CO_2 production in animals in the field. Based on DLW measurements with 25 species of birds, Nagy (1987) developed an equation relating FMR for birds to body weight:

FMR (kjoules/day) = 10.89 $Wt^{0.640}$ (g), or all birds [3-34]
FMR (kcal/day) = 2.601 $Wt^{0.640}$ (g)

In birds, the slope of FMR (i.e., 0.640) does not differ significantly from the BMR slope of 0.668 (see Table 3-2). This indicates that FMR may be a relatively constant multiple of BMR in birds over a large range of body mass.

Using estimates of FMR determined for 42 species by a variety of methods, Walsberg (1983) found a similar relationship (r^2 = 0.98, SE Y = 0.415, SE b = 0.012):

FMR (kjoules/day) = 13.05 $Wt^{0.605}$ (g), or all birds [3-35]
FMR (kcal/day) = 3.12 $Wt^{0.605}$ (g)

Separating the passerine from the non-passerine species, Nagy (1987) found a higher FMR among passerines than non-passerines of comparable weight (i.e., the Y-intercept for passerines is higher than the Y-intercept for non-passerines), as expected on the basis of basal metabolic rate:

FMR (kjoules/day)	$= 8.892\ Wt^{0.749}$ (g), or	passerines	[3-36]
FMR (kcal/day)	$= 2.123\ Wt^{0.749}$ (g)		
FMR (kjoules/day)	$= 4.797\ Wt^{0.749}$ (g), or	non-passerines	[3-37]
FMR (kcal/day)	$= 1.146\ Wt^{0.749}$ (g)		
FMR (kjoules/day)	$= 8.017\ Wt^{0.704}$ (g), or	seabirds	[3-38]
FMR (kcal/day)	$= 1.916\ Wt^{0.704}$ (g)		
FMR (kjoules/day)	$= 21.13\ Wt^{0.440}$ (g), or	non-seabirds[c]	[3-39]
FMR (kcal/day)	$= 5.051\ Wt^{0.440}$ (g)		

We provide the regression statistics for Nagy's (1987) equations (including sample size and the regression coefficient) and information required to estimate a 95-percent confidence interval for an FMR in Section 3.7.[d]

Nagy (1987) estimated the accuracy of the doubly-labeled water method to be ± 8 percent or better. Because of difficulties in recapturing birds during the nonbreeding season, most of the measured FMRs were for breeding birds (Nagy, 1987).

King (1974) estimated that FMR exceeds BMR by a factor of 3.5 on average (based on a sample of 18 measures for species ranging from 4 to 400 g in weight). Gessaman (1973) summarized data on mockingbirds and purple martins from Utter (1971) that indicated an FMR equal to 1.6 to 2.4 times the predicted BMR for adults not actively feeding nestlings. Feeding nestlings increased the ratio of FMR to BMR from 2.7 to 3.4 in purple martins (Utter, 1971, cited in Gessaman, 1973).

---

[c]All of the large birds included in the database were seabirds such as noddy, kittiwake, shearwater, albatross, tern, and petrel (Nagy, 1987). Other large birds, such as herons, hawks, and owls, were not included. Accordingly, non-passerine and non-seabird equations should be used with caution.
[d]Insufficient information is provided in Walsberg (1983) to estimate confidence intervals for a predicted FMR for species with body weights above or below the mean log body weight value of his data set.

To normalize FMR to body weight, divide the daily FMR by body weight:

NFMR (kcal/kg-day) = FMR (kcal/day) / Wt (kg) [3-40]

Figure 3-1 illustrates approximate monthly variations in the total energy budget of an adult house sparrow in Illinois throughout the year and the relationship between BMR and FMR (adapted from Kendeigh et al., 1977). For this bird, FMR varies seasonally, with a maximum value in midwinter (28 kcal/day) and a minimum in August prior to molting (20 kcal/day). Other species, however (e.g., willow ptarmigan), show no significant variation in FMR with season (King, 1974). For examples of nestling energy budgets, see Kendeigh et al. (1977) and Dunn (1980). For a discussion of modeling energy budgets for birds in general and for seabirds in particular, see Wiens (1984).

3.5.1.4. Temperature and Metabolic Rate

Below an animal's thermoneutral zone, metabolism increases with decreasing ambient temperature. Section 3.5.1.2 presented equations for EMR at 30°C and at 0°C, but these are not particularly helpful for estimating EMR at other temperatures. Although few researchers have attempted general multiple regressions of metabolic rate on both body size and temperature for birds, some relationships have been investigated in general terms (Peters, 1983):

- Low temperatures induce a greater proportional rise in metabolic rate relative to basal metabolic rate in smaller birds than in larger ones.[e]

- At high temperatures, metabolic rate increases to increase blood flow and evaporative cooling (via panting).

---

[e]This is because conductance and heat loss for a given thermal gradient between body temperature and ambient temperature rise more slowly with body size than do basal metabolic rates.

Figure 3-1. Monthly Variation in Energy Budget Estimated for a House Sparrow

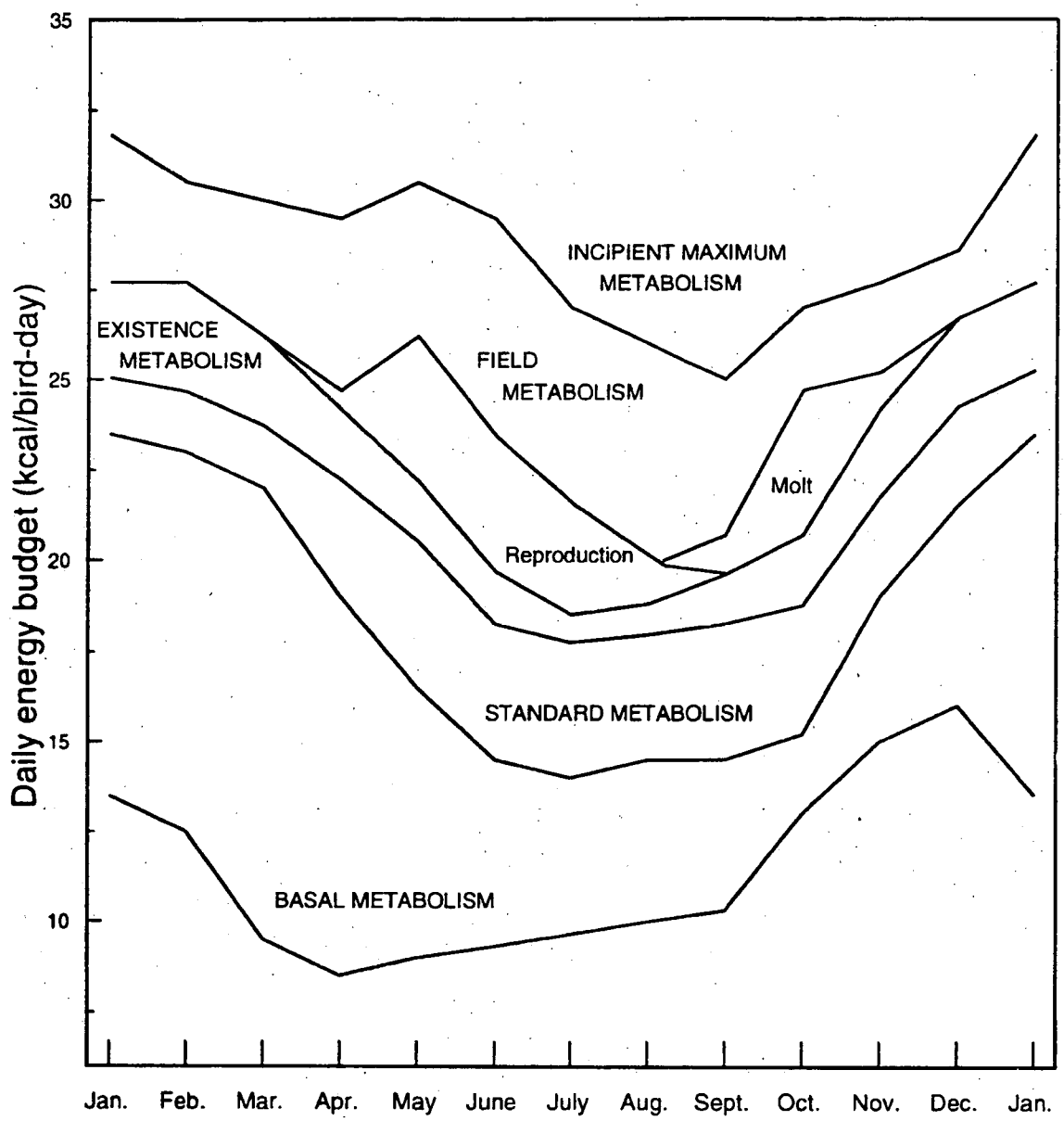

Note: In this figure, the incipient maximum metabolism is the maximum metabolic rate that a bird can maintain in times of stress (e.g., lower than usual temperatures) on a sustained basis. The difference between this value and the field (or free-living) meatbolic rate represents energy that might be available during times of need.

Source: Adapted from Kendeigh et al., 1977.

Peters (1983) developed an equation relating the ratio of SMR to BMR to thermal gradient (i.e., the difference between ambient temperature and body temperature) for birds:

$$SMR/BMR = 0.029 \text{ (thermal gradient in °C) } Wt^{-0.249} \text{ (kg)} \qquad [3\text{-}41]$$

Thus, standard metabolic costs increase relative to basal metabolism at lower temperatures, but less so for larger birds than for smaller birds. Despite the strong dependence of metabolic rate on ambient temperature, for screening-level risk assessments, it should not be necessary to adjust estimates of FMR for seasonal temperature changes. As Figure 3-1 illustrates, high metabolic demands of thermoregulation in the winter can be replaced by those of reproduction and molting during spring, summer, and fall.

3.5.2. Mammals

As for birds, metabolic rate in mammals generally decreases with increasing body size. The metabolic rates of herbivorous and carnivorous mammals are similar for similarly sized species. In this section, we present allometric models for three measures of metabolic rate on the basis of body size in mammals: basal metabolic rate (BMR), resting metabolic rate (RMR), and free-living metabolic rate (FMR). All equations take the general form of $Y = aWt^b$, but also can be represented in their log-transformed form (the equation of a straight line). We conclude this section by discussing the influence of ambient temperature on mammalian metabolic rates. Additional information that allows one to estimate a 95-percent confidence interval for a predicted FMR, the expression of metabolic rate that is generally most appropriate for wildlife exposure assessments, is provided in Section 3.7.

3.5.2.1. Basal Metabolic Rate

On the basis of BMR measurements for 26 species weighing 3.5 to 600 kg, Kleiber (1961) estimated that BMR was related to body weight in mammals according to the 3/4 power:

$$BMR\ (kcal/day) = 70\ Wt^{0.75}\ (kg) \pm 0.004 \qquad [3\text{-}42]$$

Boddington's (1978) analysis produced similar results:

$$BMR\ (kcal/day) = 75\ Wt^{0.73}\ (kg) \pm 0.013 \qquad [3\text{-}43]$$

3.5.2.2. Resting Metabolism

Stahl (1967) used an extensive database (349 species) to determine slightly higher values for RMR than had been determined for BMR (Section 2.5.2.1):

$$RMR\ (kcal/day) = 80\ Wt^{0.76}\ (kg) \qquad [3\text{-}44]$$

3.5.2.3. Field Metabolic Rate

Based on doubly-labeled water measurements with 23 species of placental mammals, Nagy (1987) developed an equation relating FMR to body weight:

$$FMR\ (kjoules/day) = 3.35\ Wt^{0.813}\ (g),\ \text{or} \qquad \text{placental mammals} \qquad [3\text{-}45]$$
$$FMR\ (kcal/day) = 0.800\ Wt^{0.813}\ (g)$$

The slope of 0.813 is significantly higher than the BMR slopes of 0.73 to 0.76 reported above. Thus, the FMR does not appear to be a constant multiple of BMR over a range of body sizes as was the case in birds. However, no FMR measurements have yet been made on shrews or other very active small mammals, and whales were included in the FMR data set (Nagy, 1987).

Separating the herbivores from non-herbivores, Nagy (1987) developed two additional equations:

$$FMR\ (kjoules/day) = 5.943\ Wt^{0.727}\ (g),\ \text{or} \qquad \text{herbivores} \qquad [3\text{-}46]$$
$$FMR\ (kcal/day) = 1.419\ Wt^{0.727}\ (g)$$

FMR (kjoules/day)	$= 2.582\ Wt^{0.862}$ (g), or	non-herbivores	[3-47]
FMR (kcal/day)	$= 0.6167\ Wt^{0.862}$ (g)		

Separating rodents from other animals, Nagy (1987) found:

FMR (kjoules/day)	$= 10.51\ Wt^{0.507}$ (g), or	rodents	[3-48]
FMR (kcal/day)	$= 2.514\ Wt^{0.507}$ (g)		

Nagy (1987) estimated the accuracy of the doubly-labeled water method to be ± 8 percent or better.

To normalize FMR to body weight (e.g., kcal/kg-day), divide the daily FMR by body weight. In Section 3.7, we provide the regression statistics for Nagy's (1987) equations (including sample size and the regression coefficient) and information that allows one to estimate a 95-percent confidence interval for an FMR value predicted for a specified body weight.

3.5.2.4. Temperature and Metabolic Rate

Few researchers have attempted general multiple regressions of metabolic rate with both body mass and temperature for mammals. However, several relationships have been investigated qualitatively (Peters, 1983):

- Low temperatures induce a greater proportional rise in metabolic rate relative to basal metabolic rate in smaller mammals than in larger ones.[f]

- At high temperatures, metabolic rate increases to increase blood flow and evaporative cooling (e.g., panting).

---

[f]This is because conductance and heat loss for a given thermal gradient between body temperature and ambient temperature rise more slowly with body size than do basal metabolic rates (Peters, 1983).

Peters (1983) developed an equation relating the ratio of SMR to BMR to thermal gradient for mammals:

$$SMR/BMR = 0.068 \text{ (thermal gradient in °C) } Wt^{-0.182} \text{ (kg)} \quad [3\text{-}49]$$

Thus, standard metabolic costs increase relative to basal metabolism at lower temperatures, but less so for larger than for smaller mammals.

3.5.3. Reptiles and Amphibians

Most reptiles and amphibians tend to have much lower metabolic rates than birds or mammals because they are poikilothermic. For example, at temperatures similar to normal body temperatures of birds and mammals (around 37 to 39°C), resting metabolic rates of reptiles and amphibians tend to be only 10 to 20 percent of those of birds and mammals of similar body weight (Bennett and Dawson, 1976). In this section, we provide some examples of allometric equations for metabolic rate. Because metabolic rate depends on body temperature, which in poikilotherms can vary substantially over time, we recommend that those persons interested in estimating metabolic rates consult more complete treatments of the subject, including thermoregulation in poikilotherms (e.g., Bennett and Dawson, 1976; Congdon et al., 1982; Duellman and Trueb, 1986; Feder and Burggren, 1992; Harless and Morlock, 1979; Hutchinson, 1979).

3.5.3.1. Basal and Resting Metabolic Rates

Robinson et al. (1983) developed an equation for the relationship between BMR and body mass for reptiles and amphibians at 20°C:

$$BMR \text{ (Watts)} = 0.19\ Wt^{0.76} \text{ (kg), or} \quad [3\text{-}50]$$
$$BMR \text{ (kcal/day)} = 3.92\ Wt^{0.76} \text{ (kg)}$$

Thus, the BMR of homeotherms (Sections 3.5.1 and 3.5.2) is approximately 30 times the BMR of poikilotherms at this ambient temperature (Peters, 1983). The difference in

metabolic rates between homeotherms and poikilotherms is lessened when poikilotherms modify their body temperatures by behavioral adjustments (such as basking in the sun).

Andrews and Pough (1985) used multiple regression analysis to evaluate the relationship between metabolic rate and three variables—mass, temperature, and standard or resting metabolic state—for snakes and lizards. From a total of 226 observations on 107 species (between 20 and 30°C for most observations), they developed the following equation:

$$MR\ (ml\ O_2/hr) = 0.013\ Wt^{0.80}\ (g) \times 10^{0.038\ temperature\ (°C)} \times 10^{0.14\ metabolic\ state} \qquad [3\text{-}51]$$

where MR equals either SMR or RMR and metabolic state equals zero (0) for standard metabolism[g] and equals 1 for resting metabolism.[h] The Q_{10} values for the influence of temperature on metabolic rate (i.e., quotient of the rate measured at one temperature divided by the rate measured at a temperature 10°C lower) were 2.4 for resting metabolism and 1.4 for standard metabolism. Thus SMR depended less on ambient temperature than did RMR.

Equation 3-51 is based on adult animals and should not be used to estimate metabolic rates of juvenile snakes and lizards. Andrews and Pough (1985) reviewed allometric equations relating resting metabolic rate to body weight within species and found that the exponents were significantly lower than the value of 0.80 in Equation 3-51. See Andrews and Pough (1985) for intraspecific allometric models for this group.

3.5.3.2. Free-Living Metabolic Rates

Nagy (1987) developed an equation for the relationship between FMR and body size in iguanid lizards:

---

[g]Measured for fasting individuals during the period of normal inactivity (at night for most species).
[h]Measured for fasting individuals during the period of normal activity (daytime for most species).

$$FMR\ (kjoules/day) = 0.224\ Wt^{0.799}\ (g),\ or \qquad [3\text{-}52]$$
$$FMR\ (kcal/day) = 0.0535\ Wt^{0.799}\ (g)$$

Bennett and Nagy (1977) estimated that the ratio of FMR to EMR for lizards is 2.0. Robinson et al. (1983) estimated the value to be 2.9, assuming that lizards rest at maintenance levels for 8 hours per day at 35°C.

Feder (1981, 1982) presented equations relating FMR to body size of unrestrained ranid (frog) tadpoles at 25°C:

$$dry\ mass\ (mg) = 0.047\ (wet\ mass)^{1.06}\ (mg) \qquad [3\text{-}53]$$

and

$$FMR\ (\mu lO_2/hr) = 2.5\ (dry\ mass)^{0.878}\ (mg),\ or \qquad [3\text{-}54]$$
$$FMR\ (mlO_2/day) = 0.06\ (dry\ mass)^{0.878}\ (mg)$$

Assuming 1 milliliter of oxygen is metabolically equivalent to approximately 4.80 calories (Dawson, 1974):

$$FMR\ (cal/day) = 0.288\ (dry\ mass)^{0.878}\ (mg) \qquad [3\text{-}55]$$

Burggren et al. (1983) estimated Q_{10} values for metabolic rates for bullfrog larvae of 1.87 between temperatures of 15 and 25°C and of 2.41 between temperatures of 25 and 33°C. Q_{10} values for a second ranid species (*Rana berlandieri*) were similar (1.97 and 1.76, respectively). Thus, the metabolic rate for ranid frogs approximately doubles with each 10-degree rise in temperature over this range of temperatures.

The equations presented in this section show that poikilotherm metabolic rate depends strongly on temperature. The available literature on the subject is extensive and complex, and again, interested readers are encouraged to consult substantive treatments of the subject (see references cited in the introduction to Section 3.5.3).

3.6. MATH PRIMER AND UNIT CONVERSIONS

To assist readers in using or modifying allometric equations presented in this Handbook or in using allometric equations presented in the open literature, we provide a brief summary of logarithm and power functions in Sections 3.6.1 and 3.6.2. Section 3.6.3 contains frequently used unit conversion factors.

3.6.1. Summary of Operations Involving Logarithms

$\log 1 = 0$

$\log (N_1 N_2) = \log N_1 + \log N_2$

$\log (N_1 / N_2) = \log N_1 - \log N_2$

$\log (1 / N_1) = -\log N_1$

$\log (N_1^c) = c \log N_1$

log c root of $N_1 = \log (N_1^{1/c}) = (1/c) \log N_1$

3.6.2. Summary of Operations Involving Powers

$W^a W^b = W^{a+b}$

$(W^a)^b = W^{ab}$

$(W_1 W_2)^a = W_1^a W_2^a$

$W^a / W^b = W^{a-b}$

$W^a / W = W^{a-1}$

$1/W^b = W^{-b}$

$W^0 = 1$

$(W_1 / W_2)^a = W_1^a / W_2^a$

c root of $W^a = (W^a)^{1/c} = W^{a/c}$

3.6.3. Unit Conversions

3.6.3.1. Approximate Factors for Metabolic Equations

1 kg dry mass	= 3 to 10 kg wet mass	(Peters, 1983)
1 kg dry mass	= 22×10^6 joules	(Peters, 1983)
1 kg wet mass	= 2 to 7×10^6 joules	(Peters, 1983)
1 kg fat	= 40×10^6 joules	(Peters, 1983)
tissue density	= 1 kg/liter	(Peters, 1983)
1 kg wet mass	= 1×10^{15} μm^3	(Peters, 1983)
1 kg dry mass	= 0.4 kg carbon	(Peters, 1983)
1 ml O_2	= 20.1 joules	(Peters, 1983)
	= 4.8 calories	(Dawson, 1974)

3.6.3.2. Exact Conversions

Area

1 acre	=	0.4047 hectares (ha)
1 square mile mi^2)	=	259 ha
1 square meter (m^2)	=	1×10^{-4} ha
1 square kilometer (km^2)	=	100 ha

Length

1 inch	=	2.54 centimeters (cm)
1 foot =	0.3 meters (m)	
	=	30.48 cm
1 mile (mi)	=	1.61 kilometers (km)

Volume

1 m^3	=	1×10^3 liters (L)
	=	1×10^6 cm^3

Mass

1 ounce (oz)	=	28.35 grams (g)
1 pound (lb)	=	453.6 g
1 lb	=	0.4536 kilograms (kg)

Work and energy (force × distance)

1 joule (J)	=	1 kg-m^2/s^2
	=	0.239 calories (cal)

Power (energy per unit time)

1 watt (W)	=	1 kg-m^2/s^3
	=	1 joule/s
	=	20.64 kcal/day
1 ml O_2/s	=	0.0446 mMol O_2/s
	=	1.43 mg O_2/s

3.7. ESTIMATING CONFIDENCE INTERVALS

A commonly reported measure of the precision of estimating log Y from log Wt (or Y from Wt) for allometric equations is the standard error (SE) of log Y:

$$\log Y = \log a + b \log Wt \pm \text{SE of } \log Y \qquad [3\text{-}2]$$

The SE of log Y is the standard error of the estimate of log Y from log Wt at a value of log Wt that represents the mean of the log Wt values used to estimate the allometric relationship. This value *cannot* be used to estimate a confidence interval (CI) for a log Y value predicted from log Wt values other than the mean log Wt value. The CI of a predicted log Y value is smallest at the mean log Y and mean log Wt values and increases as log Wt for the species of interest deviates from mean log Wt. Thus, to estimate the CI for a single predicted value of Y, one also must know the sample size and the mean of the log Wt values used in developing the allometric equation, which many investigators do not report.

Nagy (1987), however, did provide sufficient statistical information to estimate a 95-percent CI for a predicted value of Y given any value of Wt for his free-living (field) metabolic rate (FMR) and food ingestion (FI) rate equations. In this section, we outline Nagy's short-cut for estimating this CI and provide the statistical values required for each of Nagy's equations presented in this Handbook.

To estimate 95-percent CIs for the predicted FMR and FI rate, use the values from Table 3-3 (for FI rate equations) or 3-4 (for FMR equations) in the following formula:

$$95\%\ CI_{\log y} = \log y \pm c\,[d + e\,(\log Wt - \overline{\log Wt})^2]^{0.5}$$

where y is FMR in kilojoules/day or FI in grams (dry weight)/day. Log Wt is the log of the body weight in grams of the species for which y is being estimated. Log Wt bar is the mean log Wt of the species used to develop the allometric equation. Values for *c*, *d*, *e*, and log Wt bar are provided in Tables 3-3 and 3-4. Tables 3-3 and 3-4 also provide sample sizes (N), regression coefficients (r^2), and SE estimates for *b* and log *a* in the applicable equations.

Table 3-3. Regression Statistics for Nagy's (1987) Allometric Equations for Food Ingestion Rates for Free-Living Animals

Regression Statistics for Allometric Equations for Food Ingestion (FI) Rates (Dry Matter Ingestion) Rates of Free-Living Mammals, Birds, and Lizards. Equations are in the form $Y = aWt^b$ where Y is Food Ingestion Rate (in grams dry weight/day) and Wt is body weight of species s (grams wet weight).

$$95\%\ CI_{\log FI(\text{species } s)} = \log FI_{(\text{species } s)} \pm c\,[d + e\,(\log Wt_{(\text{species } s)} - \overline{\log Wt})^2]^{0.5}$$

Group subgroup	Equation	a	log a (SE log a)	b (SE b)	N	r^2	$\overline{\log Wt}$	c	d	e
Birds	3-3	0.64	-0.188 (0.060)	0.651 (0.028)	50	0.919	1.983	0.347	1.020	0.026
passerines	3-4	0.40	-0.400 (0.075)	0.850 (0.053)	26	0.915	1.378	0.158	1.038	0.480
non-passerines	3-5	0.30	-0.521 (0.132)	0.751 (0.048)	24	0.919	2.638	0.401	1.042	0.061
seabirds	3-6	0.49	-0.306 (0.187)	0.704 (0.061)	15	0.911	2.958	0.399	1.067	0.109
Eutherian Mammals (i.e., placental)	3-7	0.23	-0.629 (0.065)	0.822 (0.026)	46	0.958	2.196	0.425	1.022	0.015
rodents	3-8	0.62	-0.207 (0.194)	0.564 (0.119)	33	0.421	1.598	0.434	1.030	0.313
herbivores	3-9	0.58	-0.239 (0.109)	0.727 (0.039)	17	0.960	2.566	0.405	1.059	0.041
Iguanids										
herbivores	3-12	0.019	-1.713 (0.123)	0.841 (0.059)	5	0.985	1.896	0.358	1.200	0.278
insectivores	3-13	0.012	-1.890 (0.037)	0.773 (0.038)	20	0.958	0.870	0.151	1.050	0.279

Source: Nagy, 1987.

Table 3-4. Regression Statistics for Nagy's (1987) Allometric Equations for Free-Living (Field) Metabolic Rates

Regression Statistics for Allometric Equations for Free-Living Metabolic Rates (FMR) of Free-Living Mammals, Birds, and Lizards. Equations are in the form $Y = aWt^b$ where Y is FMR (in kilojoules/day) and Wt is body weight of species s (grams wet weight).

$$95\%\ CI_{\log FMR(species\ s)} = \log FMR_{(species\ s)} \pm c\,[d + e\,(\log Wt_{(species\ s)} - \overline{\log Wt})^2]^{0.5}$$

Group subgroup	Equa-tion	a	log a (SE log a)	b (SE b)	N	r^2	$\overline{\log Wt}$	c	d	e
Birds	3-34	10.9	1.037 (0.064)	0.640 (0.030)	50	0.907	1.983	0.368	1.020	0.026
passerines	3-36	8.89	0.949 (0.059)	0.749 (0.037)	26	0.899	1.378	2.014	0.026	0.0014
non-passerines	3-37	4.79	0.681 (0.102)	0.749 (0.037)	24	0.899	2.638	2.014	0.026	0.0014
seabirds	3-38	8.02	0.904 (0.187)	0.704 (0.061)	15	0.911	2.958	0.399	1.067	0.109
non-seabirds	3-39	21.1	1.325 (0.081)	0.440 (0.049)	35	0.709	1.565	0.297	1.029	0.113
Eutherian Mammals (i.e., placental)	3-45	3.35	0.525 (0.057)	0.813 (0.023)	46	0.967	2.196	0.371	1.022	0.015
rodents	3-48	10.5	1.022 (0.141)	0.507 (0.087)	33	0.524	1.598	0.316	1.030	0.313
herbivores	3-46	5.94	0.774 (0.109)	0.727 (0.039)	17	0.959	2.566	0.406	1.059	0.041
non-herbivores	3-47	2.58	0.412 (0.058)	0.862 (0.026)	29	0.977	1.980	0.321	1.035	0.027
Iguanids	3-52	0.224	-0.650 (0.029)	0.799 (0.023)	25	0.981	1.075	0.161	1.040	0.088

Source: Nagy, 1987.

3.8. REFERENCES

Andrews, R. M.; Pough, F. H. (1985) Metabolism of squamate reptiles: allometric and ecological relationships. Physiol. Zool. 58: 214-231.

Bartholomew, G. A.; Cade, T. J. (1963) The water economy of land birds. Auk 80: 504-539.

Bennett, A. F.; Dawson, W. R. (1976) Metabolism. In: Gans, C.; Dawson, W. R., eds. The biology of reptilia: v. 5, Physiology A. New York, NY: Academic Press; pp. 127-223.

Bennett, P. M.; Harvey, P. H. (1987) Active and resting metabolism in birds: allometry, phylogeny and ecology. J. Zool. Lond. 213: 327-363.

Bennett, A. F.; Nagy, K. A. (1977) Energy expenditure in free-ranging lizards. Ecology 58: 697-700.

Boddington, M. J. (1978) An absolute metabolic scope for activity. J. Theor. Biol. 75: 443-449.

Buechner, H. K.; Golley, F. B. (1967) Preliminary estimation of energy flow in Uganda kob (*Adenota kob thomasi* Neumann). In: Petrusewicz, L., ed. Secondary productivity of terrestrial ecosystems. Warszawa-Krakow; pp. 243-254.

Burggren, W. W.; West, N. H. (1982) Changing respiratory importance of gills, lungs and skin during metamorphosis in the bullfrog *Rana catesbeiana*. Physiol. Zool. 56: 263-273.

Burggren, W. W.; Feder, M. E.; Pinder, A. W. (1983) Temperature and the balance between aerial and aquatic respiration in the larvae of *Rana berlandieri* and *Rana catesbeiana*. Physiol. Zool. 56: 263-273.

Calder, W. A. (1981) Scaling of physiological processes in homeothermic animals. Ann. Rev. Physiol. 43: 301-322.

Calder, W. A.; Braun, E. J. (1983) Scaling of osmotic regulation in mammals and birds. Am. J. Physiol. 244: R601-R606.

Congdon, J. D.; Dunham, A. E.; Tinkle, D. W. (1982) Energy budgets and life histories of reptiles. In: Gans, C.; Pough, F. H., eds. Biology of the reptilia, physiology D; physiological ecology: v. 13. New York, NY: Academic Press; pp. 233-271.

Dawson, W. R. (1954) Temperature regulation and water requirements of the brown and abert towhees, *Pipilo fuscus* and *Pipilo aberti*. Univ. California Publ. Zool. 59: 81-124.

Dawson, W. R. (1974) Appendix: conversion factors for units used in the symposium. In: Paynter, R. A., ed. Avian energetics. Cambridge, MA: Nuttal Ornithological Club; Publication no. 15.

Drent, R. H.; Stonehouse, B. (1971) Thermoregulatory responses of the Peruvian penguin *Spheniscus humbolti*. Comp. Biochem. Physiol. A: Comp. Physiol. 40: 689-710.

Duellman, W. E.; Trueb, L. (1986) Biology of amphibians. New York, NY: McGraw-Hill Book Company.

Dunn, E. H. (1980) On the variability in energy allocation of nestling birds. Auk 97: 19-27.

Ellis, H. I. (1984) Energetics of free-ranging seabirds. In: Whittow, G. C.; Rahn, H., ed. Seabird energetics. New York, NY: Plenum Press; pp. 203-234.

Farlow, J. O. (1976) A consideration of the trophic dynamics of a late Cretaceous large-dinosaur community (Oldman Formation). Ecology 57: 841-857.

Feder, M. E. (1981) Effect of body size, trophic state, time of day, and experimental stress on oxygen consumption of anuran larvae: an experimental assessment and evaluation of the literature. Comp. Biochem. Physiol. A: 70: 497-508.

Feder, M. E. (1982) Effect of developmental stage and body size on oxygen consumption of anuran larvae: a reappraisal. J. Exp. Zool. 220: 33-42.

Feder, M. E.; Burggren, W. W., eds. (1992) Environmental physiology of the amphibia. Chicago, IL: University of Chicago Press.

Gans, C.; Dawson, W. R., eds. (1976) Biology of the reptilia: v. 5, physiology A. New York, NY: Academic Press.

Gessaman, J. A. (1973) Methods of estimating the energy cost of free existence. In: Gessaman, J. A., ed. Ecological energetics of homeotherms. Monogr. Ser. 20 ed. Logan, UT: Utah State University Press; pp. 3-31.

Golley, F. B. (1961) Energy values of ecological materials. Ecology 42: 581-584.

Harless, M.; Morlock, H., eds. (1979) Turtles: perspectives and research. Toronto, Canada: John Wiley and Sons, Inc.

Hemmingsen, A. M. (1960) Energy metabolism as related to body size and respiratory surfaces, and its evolution. Rept. Steno Mem. Hosp. Nord. Insulin Lab., Part II 9: 1-95.

Hume, I. D. (1982) Digestive physiology and nutrition of marsupials. Cambridge, England: Cambridge University Press.

Hutchinson, V. H. (1979) Thermoregulation. In: Harless, M.; Morlock, H., ed. Turtles: perspectives and research. Toronto, Canada: John Wiley and Sons, Inc.; pp. 207-227.

Hutchinson, V. H.; Whitford, W. G.; Kohl, M. (1968) Relation of body size and surface area to gas exchange in anurans. Physiol. Zool. 41: 65-85.

Jackson, D. C. (1979) Respiration. In: Harless, M.; Morlock, H., ed. Turtles: perspectives and research. Toronto, Canada: John Wiley and Sons, Inc.; pp. 165-191.

Kendeigh, S. C. (1969) Energy responses of birds to their thermal environments. Wilson Bull. 81: 441-449.

Kendeigh, S. C. (1970) Energy requirements for existence in relation to size of bird. Condor 72: 60-65.

Kendeigh, S. C.; Dol'nik, V. R.; Govrilov, V. M. (1977) Avian energetics. In: Pinowski, J.; Kendeigh, S. C., eds. Granivorous birds in ecosystems. Cambridge, MA: Cambridge University Press.

King, J. R. (1974) Seasonal allocation of time and energy resources in birds. In: Paynter, R. A. Jr., ed. Avian energetics. Cambridge, MA: Nuttal Ornithological Club; Publication no. 15; pp. 4-85.

Kleiber, M. (1961) The fire of life. New York, NY: John Wiley.

Koplin, J. R.; Collopy, M. W.; Bammann, A. R.; et al. (1980) Energetics of two wintering raptors. Auk 97: 795-806.

Lamprey, H. F. (1964) Estimation of the large mammal densities, biomass and energy exchange in the Tarangire Game Reserve and the Masai Steppe in Tanganyika. E. Afr. Wild. J. 2: 1-46.

Lasiewski, R. C.; Calder, W. A. (1971) A preliminary allometric analysis of respiratory variables in resting birds. Resp. Phys. 11: 152-166.

Lasiewski, R. C.; Dawson, W. R. (1967) A reexamination of the relation between standard metabolic rate and body weight in birds. Condor 69: 12-23.

Lillywhite, H. B.; Maderson, P. F. (1982) Skin structure and permeability. In: Gans, C.; Pough, F. H., eds. Biology of the reptilia: v. 12, physiology C; physiological ecology. New York, NY: Academic Press; pp. 397-442.

Mahmoud, I. Y.; Klicka, J. (1979) Feeding, drinking, and excretion. In: Harless, M.; Morlock, H., ed. Turtles: perspectives and research. Toronto, Canada: John Wiley and Sons, Inc.; pp. 229-243.

Medway, W.; Kare, M. R. (1959) Water metabolism of the growing domestic fowl with specific reference to water balance. Poultry Sci. 38: 631-637.

Meeh, K. (1879) Oberflachenmessungen des mensclichen Korpers. Z. Biol. 15: 426-458.

Milsom, W. K.; Chan, P. (1986) The relationship between lung volume, respiratory drive and breathing pattern in the turtle *Chrysemys picta*. J. Exp. Biol. 120: 233-247.

Minnich, J. E. (1982) The use of water. In: Gans, C.; Pough, F. H., eds. Biology of the reptilia: v. 12, physiology C; physiological ecology. New York, NY: Academic Press; pp. 325-395.

Nagy, K. A. (1987) Field metabolic rate and food requirement scaling in mammals and birds. Ecol. Monogr. 57: 111-128.

Nagy, K. A.; Peterson, C. C. (1988) Scaling of water flux rate in animals. Berkeley, CA: University of California Press.

Peters, R. H. (1983) The ecological implications of body size. Cambridge, England: Cambridge University Press.

Reiss, M. J. (1989) The allometry of growth and reproduction. Cambridge, United Kingdom: Cambridge University Press.

Robbins, C. T. (1983) Wildlife feeding and nutrition. New York, NY: Academic Press.

Robinson, R. W.; Peters, R. H.; Zimmermann, J. (1983) The effects of body size and temperature on metabolic rate of organisms. Can. J. Zool. 61: 281-288.

Rubner, M. (1883) Uber den Einfluss der Korpergrosse auf Stoff- und Kraftweschsel. Z. Biol. 19: 535-562.

Schmidt-Nielsen, K. (1970) Energy metabolism, body size and problems of scaling. Fed. Proc. Am. Soc. Exp. Biol. 29: 1524-1532.

Schmidt-Nielsen, K. (1972) How animals work. Cambridge, MA: Cambridge University Press.

Seibert, H. C. (1949) Differences between migrant and non-migrant birds in food and water intake at various temperatures and photoperiods. Auk 66: 128-153.

Seymour, R. S. (1982) Physiological adaptations to aquatic life. In: Gans, C.; Pough, F. H., eds. Biology of the reptilia: v. 13, physiology D; physiological ecology. New York, NY: Academic Press; pp. 1-51.

Skadhauge, R. (1975) Renal and cloacal transport of salt and water. Symp. Zool. Soc. London 35: 97-106.

Stahl, W. R. (1967) Scaling of respiratory variables in mammals. J. Appl. Physiol. 22: 453-460.

U. S. Environmental Protection Agency. (1990) Interim methods for development of inhalation reference concentrations, review draft. Washington, DC: Office of Research and Development; EPA report no. EPA/600/8-90/066A.

Utter, J. M. (1971) Daily energy expenditures of free-living purple martins (*Progne subis*) and mockingbirds (*Mimus polyglottos*) with a comparison of two northern populations of mockingbirds [Ph.D. dissertation]. Rutgers, NJ: Rutgers University; 173 pp.

Walsberg, G. E. (1983) Avian ecological energetics. In: Farner, D. S.; King, J. R.; Parkes, K. C., eds. Avian biology, v. 7. New York, NY: Academic Press; pp. 161-220.

Walsberg, G. E.; King, J. R. (1978) The relationship of the external surface area of birds to skin surface area and body mass. J. Exp. Biol. 76: 185-189.

Whitford, W. G.; Hutchinson, V. H. (1967) Body size and metabolic rate in salamanders. Physiol. Zool. 40: 127-133.

Wiens, J. A. (1984) Modelling the energy requirements of seabird populations. In: Whittow, G. C.; Rahn, H., eds. Seabird energetics. New York, NY: Plenum Press; pp. 284.

Zar, J. H. (1968) Standard metabolism comparisons between orders of birds. Condor 10: 278.

4. EXPOSURE ESTIMATES

This section provides equations to estimate oral doses of chemical contaminants for wildlife, along with a discussion of dose estimates for other exposure routes. Section 4.1 provides general dose equations. Equations for drinking water exposures are presented in Section 4.1.1, followed by equations for dietary exposures in Section 4.1.2. In the dietary exposure section, data on the caloric and water content of various food types and diet assimilation efficiencies are also provided. An equation and data to facilitate estimating doses received through soil or sediment ingestion are discussed in Section 4.1.3. Sections 4.1.4 and 4.1.5 provide a qualitative discussion of inhalation and dermal dose estimates. Section 4.2 describes considerations for analyses of uncertainty in exposure assessments. References are provided in Section 4.3.

4.1. GENERAL DOSE EQUATIONS

EPA's (1992a) *Framework for Ecological Risk Assessment* defines exposure as the co-occurrence of or contact between a stressor and an ecological component. When assessing risks of exposure to chemical contaminants, potential dose is often the metric used to quantify exposure. Potential dose is defined as the amount of chemical present in food or water ingested, air inhaled, or material applied to the skin (U.S. EPA, 1992b). Potential dose is analogous to the administered dose in a toxicity test. Because exposure to chemicals in the environment is generally inadvertent, rather than administered, EPA's (1992b) *Guidelines for Exposure Assessment* use the term potential dose rather than administered dose.

A general equation for estimating dose for intake processes is:

$$D_{pot} = \int_{t1}^{t2} C(t)\ IR(t)\ dt \qquad [4\text{-}1]$$

where D_{pot} is the total potential dose over time (e.g., total mg contaminant intake between t1 and t2), C(t) is the contaminant concentration in the contacted medium at time t (e.g., mg contaminant/kg medium), and IR(t) is the intake rate of the contaminated medium at time t measured as mass ingested or inhaled by an animal per unit time (e.g., kg medium/day). If C and IR are constant over time, then the total potential dose can be estimated as:

$$D_{pot} = C \times IR \times ED \qquad [4\text{-}2]$$

where ED is the exposure duration and equals t2 - t1.

Therefore, if C and IR are constant, the potential average daily dose (ADD_{pot}) for the duration of the exposure, normalized to the animal's body weight (e.g., mg/kg-day), is estimated by dividing total potential dose by ED and by body weight (BW):

$$ADD_{pot} = (C \times IR \times ED) / (BW \times ED), \text{ or} \qquad [4\text{-}3]$$
$$ADD_{pot} = (C \times IR) / BW$$

If C or IR vary over time, they may be averaged over ED. However, it is not always appropriate to average intake over the entire exposure duration: For example, a given quantity of a chemical might acutely poison an animal if ingested in a single event, but if that amount is averaged over a longer period, effects might not be expected at all. Similarly, developmental effects occur only during specific periods of gestation or development. A toxicologist should be consulted to determine which effects may be of concern given the exposure pattern and chemicals of interest. For carcinogenic compounds, it may be more appropriate to average exposure over the animal's lifetime. Again, address any questions to a toxicologist.

In addition, IR and BW can be combined into a normalized ingestion or inhalation rate (NIR) (e.g., kg medium/kg body weight - day):

$$NIR = IR / BW \qquad [4\text{-}4]$$

Therefore,

$$ADD_{pot} = C \times NIR \qquad [4\text{-}5]$$

It is important to remember that NIR can vary with changes in age, size, and reproductive status of an animal.

Two other variables often are used in calculations of average daily dose. A frequency term (FR) is used to denote the fraction of the time that an animal is exposed to contaminated media. In ecological exposure assessments, this term often is used when the foraging range of an animal is larger than the area of contamination.[a] An absorption factor (ABS) is used when an estimate of absorbed dose rather than potential dose is desired. It is commonly assumed that absorption in the species of concern in the field is the same as in the test organism, so no absorption factor is needed. However, if absorption is expected to differ, a ratio of the absorption factors would be used in the exposure equation.

4.1.1. Drinking Water

Figure 4-1 presents two wildlife oral exposure equations corresponding to two patterns of contamination of water:

(1) the animal obtains some of its drinking water from a contaminated source and the remainder from uncontaminated sources; and

(2) the animal consumes drinking water from several sources contaminated at different levels.

---

[a]The frequency term should be estimated with care. For example, if a feature attractive to wildlife is contaminated, an animal may spend a proportionally longer time in the contaminated area. Similarly, if only part of an animal's theoretical foraging range has suitable habitat, the animal may spend more time feeding in that habitat. Finally, animals may avoid areas or media with contamination they can detect.

Figure 4-1. Wildlife Dose Equations for Drinking Water Exposures

One Source of Contamination

$$ADD_{pot} = C \times FR \times NIR \qquad [4\text{-}6]$$

Different Sources With Varying Levels of Contamination

$$ADD_{pot} = \sum_{i=1}^{n} (C_i \times FR_i) \times NIR \qquad [4\text{-}7]$$

ADD_{pot} = Potential average daily dose (e.g., in mg/kg-day).

C = Average contaminant concentration in a single water source (e.g., in mg/L or in mg/kg, because 1 liter of water weighs 1 kg).

FR = Fraction of total water ingestion from the contaminated water source (unitless).

NIR = Normalized water ingestion rate (i.e., fraction of body weight consumed as water per unit time; e.g., in g/g-day)

and

C_i = Average contaminant concentration in the ith water source (e.g., in mg/L).

FR_i = Fraction of water consumed from the ith water source (unitless).

n = Number of contaminated water sources.

In the first case, the distribution and mean value of the contaminant concentration in the one source could be determined. In the second case, the different water sources are likely to be characterized by different mean levels of contamination, and consumption from these sources would be weighted by the fraction (FR_i) of the animal's total daily water ingestion obtained from each source. FR (or FR_i) in Figure 4-1 is a function of the degree of overlap of the contaminated water source(s) and the animal's home range. If the area of the contaminated water source is larger than the typical home range for the species, FR could

equal one for many individuals. The number of individuals for which FR equals one could be estimated from information on population density, distribution, and social structure. For large, mobile animals, the area of contamination may be smaller than the area over which a single animal is likely to move. In these cases, FR for an animal with the contaminated area entirely within its home range can be estimated using information on the home range, attributes of the contaminated area, and drinking behavior of the animal. Home range estimates should be used with care because (1) the area in which an animal moves varies with several factors, including reproductive status, season, and habitat quality; (2) most animals do not drink or feed randomly within their home range; (3) the term home range has been used inconsistently in the literature; and (4) estimates of home range can vary substantially with the measurement technique used. In this Handbook and accompanying Appendix, we have tried to identify clearly which estimates of home range correspond to a daily activity and foraging home range.

When using home range data, we recommend that users consult the Appendix tables for the species of interest to become familiar with how estimates of home range size vary with geographic area, season, type of habitat, animal reproductive status, and measurement technique. The Appendix tables provide both the sample size and a brief description of the method used to estimate home range size, which can help indicate the robustness of an estimate and whether it is likely to over- or underestimate home range size. For mark-and-recapture studies, the number of recaptures per animal is provided when possible to assist the user in determining the degree to which the reported values may underestimate true home range size. If a study indicated that the home range estimate is likely to include areas outside of the animals' usual activity range (e.g., distant egg-laying sites used only once per season), this would be noted in the Appendix tables, and the value would not be included in Chapter 2. Some animals use a fixed "home base" some distance from feeding grounds such as a rookery. For these animals, we have reported foraging radius (the distance they will travel to a feeding area). Foraging radius can be used to determine whether the animal might feed or drink in a given contaminated area.

4.1.2. Diet

Wildlife can be exposed to contaminants in one or more components of their diet, and different components can be contaminated at different levels. In this section, we outline methods of estimating food ingestion rates that allow total doses to be estimated when different components of the diet are contaminated, either at similar or different levels (Section 4.1.2.1). We also provide data on caloric content of foods and assimilation efficiencies that can be used in the dose equations provided (Section 4.1.2.2).

4.1.2.1. Dose Equations

Figure 4-2 presents a generic equation for estimating oral doses of contaminants in food for wildlife species. FR_k is a function of the degree of overlap of the kth type of simplest case, the normalized ingestion rate for each food type, NIR_k, is known on a wet-

Figure 4-2. Wildlife Dose Equations for Dietary Exposures

$$ADD_{pot} = \sum_{k=1}^{m} (C_k \times FR_k \times NIR_k) \qquad [4\text{-}8]$$

ADD_{pot}	=	Potential average daily dose (e.g., in mg/kg-day).
C_k	=	Average contaminant concentration in the kth type of food (e.g., in mg/kg wet weight).
FR_k	=	Fraction of intake of the kth food type that is contaminated (unitless). For example, if the kth component of an animal's diet were salmon, FR_k for salmon would equal the fraction of the salmon consumed that is contaminated at level C_k. If all of the salmon consumed were contaminated at level C_k, then FR_k would equal one.
NIR_k	=	Normalized ingestion rate of the kth food type on a wet-weight basis (e.g., in g/g-day).
m	=	Number of contaminated food types.

contaminated forage or prey and the animal's home range (see Section 4.1.1). In the weight basis, and Equation 4-8 can be used directly. In many cases, however, NIR_k is unknown or has been determined for laboratory diets that differ significantly from natural diets in terms of caloric value per unit wet weight. Ingestion rates based on relatively dry laboratory diets might underestimate the amount of food a free-living animal consumes.

There are several ways to estimate NIR_k, depending on the type of information that is available. If dietary composition is expressed as the number of each prey type captured on a daily basis (N_k), estimating the normalized ingestion rate for each prey type (NIR_k) requires only one step:

$$NIR_k = (N_k \times Wt_k) / BW \qquad [4\text{-}9]$$

where Wt_k is the body weight of the kth prey type and BW is the body weight of the predator.

Figure 4-3 presents a flow chart depicting equations that can be used if the proportion of the diet for a given food type has been measured or estimated on a wet-weight basis. These equations may require estimates of the free-living metabolic rate (FMR) of the organism and the metabolizable energy (ME) of the organism's forage or prey. Estimated FMRs can be found in the species profiles in Chapter 2, and allometric equations for estimating FMR on the basis of body weight are provided in Chapter 3 (Section 3.5). ME should be averaged over the food types when ME on a wet-weight basis (e.g., cal/g wet weight) differs substantially among the different foods. Section 4.1.2.2 describes how to estimate ME.

A common situation facing someone conducting a wildlife exposure assessment for predators is that in a key study, dietary composition is expressed as a percentage of the total number of prey captured over a period of time instead of as a percentage of the total wet weight of food ingested daily. Because some prey can be substantially larger than others (e.g., rabbits compared with voles), and because ME of different types of prey may

Figure 4-3. Estimating NIR_k When Dietary Composition Is Known on a Wet-Weight Basis

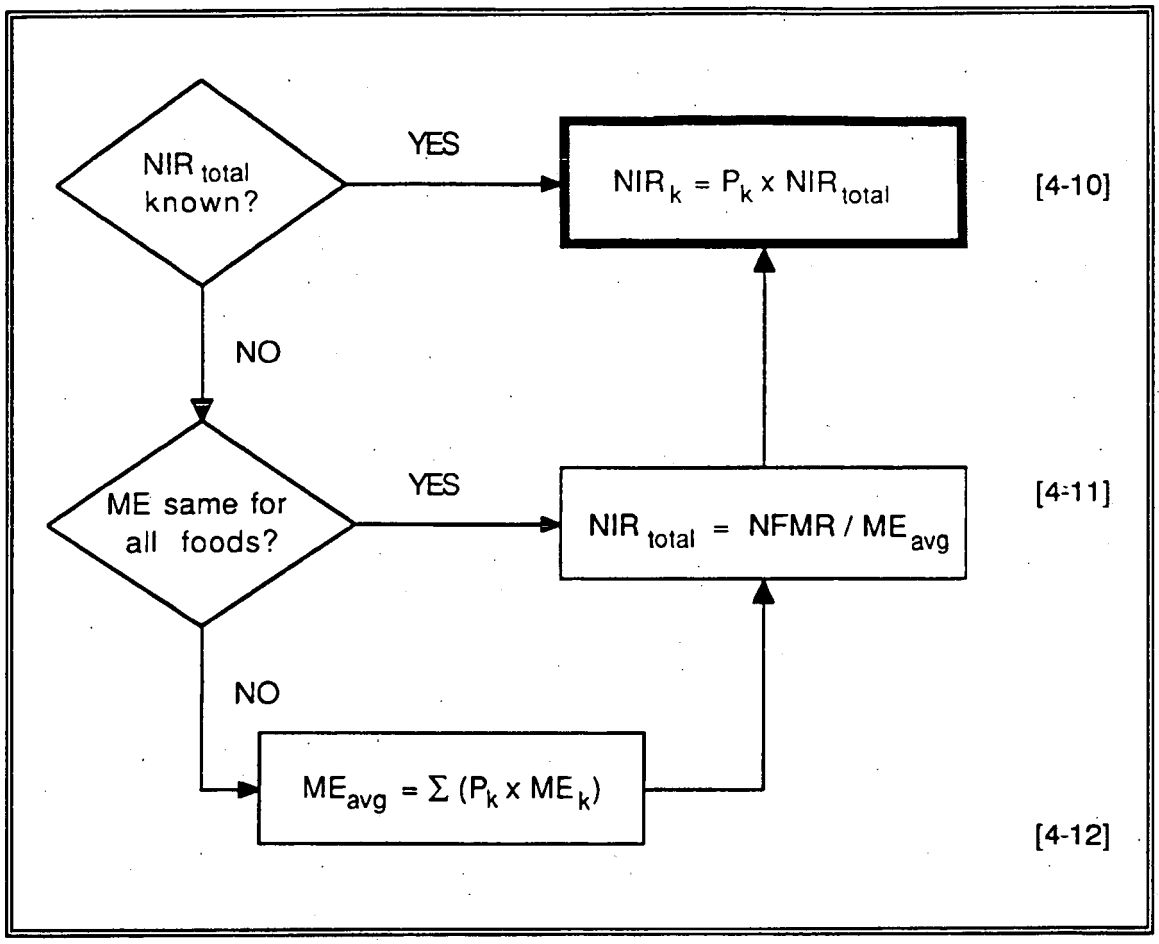

NIR_{total}	=	Total normalized ingestion rate (e.g., in g/g-day).
NIR_k	=	Normalized ingestion rate of the kth food type (e.g., in g/g-day).
P_k	=	Proportion of diet consisting of the kth food type on a wet-weight basis (unitless).
ME_{avg}	=	Average metabolizable energy of the total diet on a wet-weight basis (e.g., in kcal/g wet weight).
ME_k	=	Metabolizable energy of the kth food type on a wet-weight basis (e.g., in kcal/g wet weight).
NFMR	=	Free-living metabolic rate normalized to body weight (e.g., in kcal/g-day).

differ, the steps outlined in Figure 4-4 may be needed to estimate prey-specific ingestion rates. First, one calculates the ME of each prey type. Then, one determines the average number of prey (N_{avg}) captured daily on the basis of the metabolic needs of the predator

Figure 4-4. Estimating NIR_k Based on Different ME Values When Dietary Composition Is Expressed as Percentage of Total Prey Captured

Step 1: Calculate the metabolizable energy (ME) content of each prey or food type on a wet-weight basis:

$$ME(\text{wet wt})_k = GE(\text{wet wt})_k \times AE_k \qquad [4\text{-}13]$$

Step 2: Estimate the average number of prey (or other food items) consumed each day:

$$N_{avg} = FMR / (\text{weighted average prey ME})$$

$$N_{avg} = FMR / \left(\sum_{k=1}^{m} PN_k \times Wt_k \times ME(\text{wet wt})_k\right) \qquad [4\text{-}14]$$

Step 3: Calculate IR_k:

$$IR_k = N_{tot} \times PN_k \times Wt_k \qquad [4\text{-}15]$$

Step 4: Normalize to body weight:

$$NIR_k = IR_k / BW \qquad [4\text{-}16]$$

$ME(\text{wet wt})_k$	=	Metabolizable energy in the kth prey or food type (e.g., in kcal/g wet weight).
$GE(\text{wet wt})_k$	=	Gross energy content of the kth food type (e.g., in kcal/g wet weight).
AE_k	=	Assimilation efficiency for the species for the kth food type (unitless).
N_{avg}	=	Average number of prey (or other food items) eaten each day.
FMR	=	Free-living metabolic rate (e.g., in kcal/day).
m	=	Number of different types of prey or other foods.
PN_k	=	Proportion of the total number of prey that is composed of the kth prey type (unitless). It often is the case that larger numbers of relatively small prey and smaller numbers of relatively large prey are captured. (If the total number of prey of each type captured each day are reported in the literature, calculations of IR_k are very simple [i.e., $N_k \times Wt_k$] and steps 1 and 2 are unnecessary.)
Wt_k	=	Body weight of an individual of the kth food type (e.g., in g).
IR_k	=	Ingestion rate of the kth food type (e.g., in g/day).

and the weighted average ME of the prey. Given N_{avg} , the ingestion rate for each prey type (IR_k) can be computed on a wet-weight basis and normalized to body weight (NIR_k). Because N_{avg} is estimated using prey weight, different sizes of the same prey species (e.g., smaller and larger fish) should be separated into appropriate size intervals to reduce uncertainty in the estimate.

4.1.2.2. Energy Content and Assimilation Efficiencies

The total or gross energy (GE) content of a food type is a function only of characteristics of the food. On the other hand, metabolizable energy (ME) depends on characteristics of both the food and the organism eating it. To clarify the meaning of ME, Figure 4-5 presents a flow chart of energy utilization by animals. Digestible energy in a diet is GE consumed minus the energy lost as feces; digestible energy efficiency (DE) is digestible energy divided by GE. ME is GE consumed minus the energy lost as both feces and urine. Assimilation efficiency (AE, also called metabolizable energy efficiency) is ME divided by GE. Rearranging this relationship, ME is equal to GE of the diet multiplied by the animal's AE for the diet as shown in Figure 4-6, Equation 4-17. General ME values can be found in Table 3-1 or more specific ones calculated from GE content of the food and the AE of the animal eating that food, as discussed below.

The GE content of food typically is reported using one (or more) of three measures: (1) energy per unit total dry weight, (2) energy per unit ash-free dry weight, or (3) energy per unit fresh biomass (i.e., per unit wet weight) (Górecki, 1975). Caloric content per unit total dry weight is obtained directly from the combustion of dried material in a calorimeter. Ash-free dry weight is the dry weight after subtracting the ash content.[b] The ash-free dry-weight caloric value exceeds the total dry-weight caloric value by the ratio of the total dry weight to the ash-free dry weight. Typically, animal (exclusive of thick shells) and plant materials are 1 to 10 percent ash on a wet-weight basis and 5 to 30 percent ash on a dry-weight basis (Ashwell-Erickson and Elsner, 1981; Cummins and Wuycheck, 1971;

---

[b]Ash constituents typically include calcium carbonate (e.g., shell), calcium phosphate (vertebrate bone), and hydrated silica salts.

Figure 4-5. Utilization of Food Energy by Animals

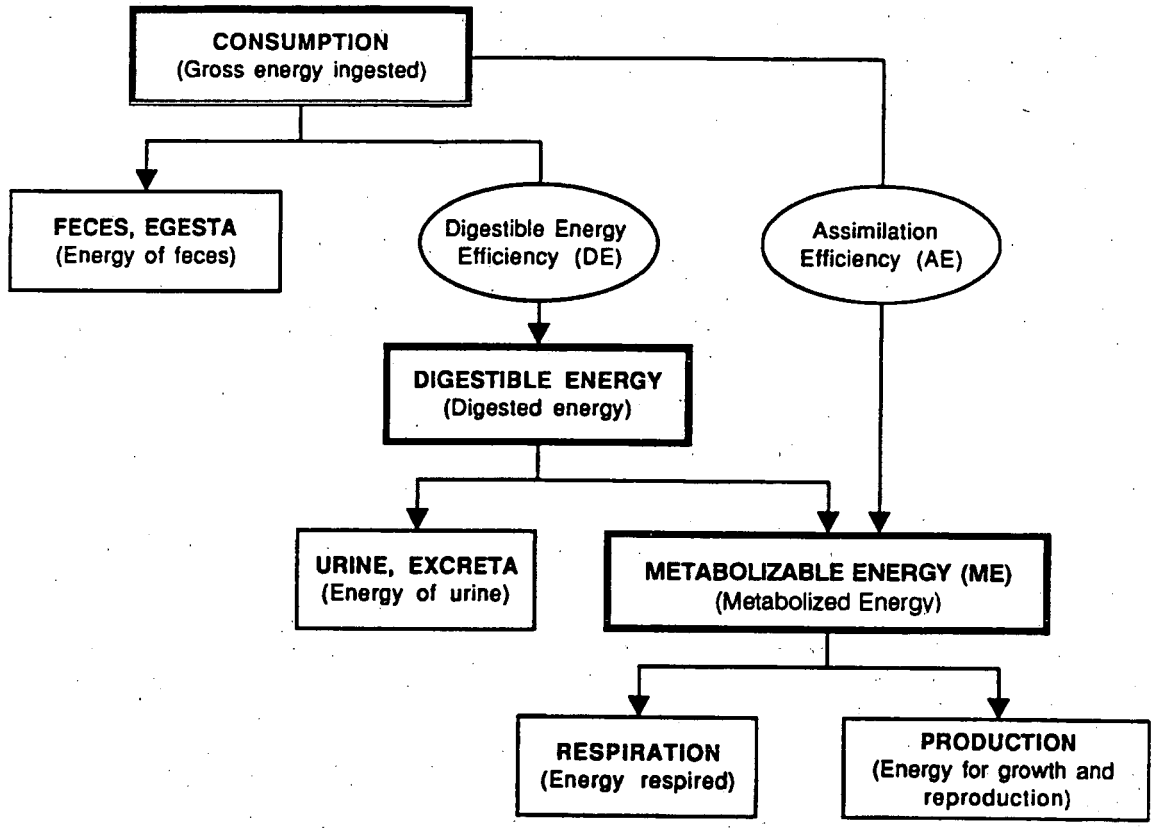

Source: Adapted from Grodzinski and Wunder, 1975.

Figure 4-6. Metabolizable Energy (ME) Equation

$$ME = GE \times AE \qquad [4\text{-}17]$$

where:

ME = Metabolizable energy (e.g., in kcal/g)

GE = Gross energy (e.g., in kcal/g)

AE = Assimilation efficiency (unitless)

This Handbook assumes ME and GE are estimated on a wet-weight basis. To estimate ME or GE of the kth food type on a wet-weight basis from dry-weight measurements, the following equations can be used:

$$GE(\text{wet wt})_k = GE(\text{dry wt})_k \times (1 - \text{proportion water}_k) \text{ or} \qquad [4\text{-}18]$$

$$GE(\text{wet wt})_k = GE(\text{dry wt})_k \times (\text{dry weight}_k/\text{wet weight}_k) \qquad [4\text{-}19]$$

and

$$ME(\text{wet wt})_k = ME(\text{dry wt})_k \times (1 - \text{proportion water}_k) \text{ or} \qquad [4\text{-}20]$$

$$ME(\text{wet wt})_k = ME(\text{dry wt})_k \times (\text{dry weight}_k/\text{wet weight}_k) \qquad [4\text{-}21]$$

Hunt, 1972). The ash content of the diet is not metabolized and thus does not provide energy to the animal. Figure 4-6 (Equations 4-18 through 4-21) illustrates how the caloric content per unit of fresh biomass can be obtained by adjusting the dry-weight value based on the water content of the biomass. A summary of GE contents of many wildlife food types are presented in Tables 4-1 a given species on a wet-weight basis tends to be more variable than caloric content on a dry-weight basis because plants, and to a lesser degree animals, vary in their water content depending on environmental conditions. Ash-free dry-weight caloric values are not presented because it is not appropriate to use them with the equations and AEs in this chapter. Ash contents are accounted for in the AEs presented in Table 4-3.

Table 4-1. Gross Energy and Water Composition of Wildlife Foods: Animal Prey (values expressed as mean [standard deviation]^n where n = number of studies)

Type of food	kcal/g wet wt	% H_2O	kcal/g dry wt	References
Aquatic				
invertebrates				
bivalves (without shell)	0.80	82 (4.5)[3]	4.6 (0.35)[4]	1,2,3,4,5,6
crabs (with shell)	1.0 (0.21)[5]	74 (6.1)[5]	2.7 (0.45)[4]	1,2,3,7
shrimp	1.1 (0.24)[4]	78 (3.3)[7]	4.8 (0.31)[6]	1,3,4,6,7
isopods, amphipods	1.1	71-80	3.6 (0.78)[3]	4,6,7
cladocerans	0.74	79-87	4.8 (0.62)[14]	2,4
insect larvae			5.3 (0.37)[8]	1,4
vertebrates				
bony fishes	1.2 (0.24)[18]	75 (5.1)[18]	4.9 (0.38)[18]	7
Pacific herring	2.0 (0.43)[3]	68 (3.9)[3]	6.1 (0.50)[4]	8,9
small fish (e.g., bluegill)			4.1 (0.47)[3]	1,7
Terrestrial				
invertebrates				
earthworms[a]	0.78-0.83	84 (1.7)[3]	4.6 (0.36)[4]	1,7
grasshoppers, crickets	1.7 (0.26)[3]	69 (5.6)[11]	5.4 (0.16)[4]	1,10,11
beetles (adult)	1.5	61 (9.8)[5]	5.7-5.9	1,10,11
mammals				
mice, voles, rabbits	1.7 (0.28)[14]	68 (1.6)[4]	5.0 (1.3)[17]	12,13,14
birds				
passerines				
with peak fat reserves[b]			7.8 (0.18)[10]	15
with typical fat reserves	1.9 (0.07)[3]	68	5.6 (0.34)[13]	10,14,15,16
mallard (flesh only)	2.0	67	5.9	10
gulls, terns	1.9		4.4	1
reptiles and amphibians				
snake, lizards	1.4	66	4.5 (0.28)[5]	14,17
frogs, toads	1.2	85 (4.7)[3]	4.6 (0.45)[3]	12,14

Note: For Tables 4-1 and 4-2, a single value represents the results of a single study on one species, and should not be interpreted as a mean value or a value indicating no variation in the category. Two values separated by a hyphen indicate that values were obtained from only two studies.

[a]Not including soil in gut, which can constitute one-third of the wet weight of an earthworm.
[b]Peak fat reserves occur just prior to migration. Typical fat reserves are for resident passerines or migratory species during nonmigratory seasons.

References: (1) Cummins and Wuycheck, 1971; (2) Golley, 1961; (3) Tyler, 1973; (4) Jorgensen et al., 1991; (5) Pierotti and Annett, 1987; (6) Minnich, 1982; (7) Thayer et al., 1973; (8) Ashwell-Erickson and Elsner, 1981; (9) Miller, 1978; (10) Collopy, 1975; (11) Bell, 1990; (12) Górecki, 1975; (13) Golley, 1960; (14) Koplin et al., 1980; (15) Odum et al., 1965; (16) Duke et al., 1987; (17) Congdon et al., 1982.

Type of food	kcal/g wet wt[a]	% H_2O	kcal/g dry wt	References
Aquatic				
algae	0.41-0.61	84 (4.7)[3]	2.36 (0.64)[4]	1,2,3
aquatic macrophytes		87 (3.1)[3]	4.0 (0.31)[12]	1,2,4
emergent vegetation		[45-80][b]	4.3 (0.13)[3]	1,2,4
Terrestrial				
monocots				
young grasses	1.3	70-88	4.2	5,6
mature dry grasses		7-10	4.3 (0.33)[5]	1,5,7,8
dicots				
leaves		85 (3.5)[3]	4.2 (0.49)[57]	9
roots			4.7 (0.43)[52]	9
bulbs, rhizomes			3.6 (0.68)[3]	2,7,10
stems, branches			4.3 (0.34)[51]	9
seeds		9.3 (3.1)[12]	5.1 (1.1)[57]	6,9,11,12
fruit				
pulp, skin	1.1 (0.30)[3]	77 (3.6)[3]	2.0 (3.4)[28]	10,13
pulp, skin, seeds			2.2 (1.6)[10]	10

Note: For Tables 4-1 and 4-2, a single value represents the results of a single study on one species, and should not be interpreted as a mean value or a value indicating no variation in the category. Two values separated by a hyphen indicate that values were obtained from only two studies.

[a] Few determinations of the energy content of plants have been made on a wet-weight basis because plants fluctuate widely in water content depending on environmental conditions.

[b] Values in brackets represent total range of field measurements, instead of values from only two studies, as for the remainder of the table. Buchsbaum and Valiela (1987) found the water content of the emergent marsh vegetation *Spartina alterniflora*, *S. patens*, and *Juncus gerardi* to decrease over a summer from 80 to 60 percent, 70 to 45 percent, and 78 to 61 percent, respectively, as the marsh dried. In contrast, they found a submerged macrophyte to maintain water content within a few percent throughout the season.

References: (1) Cummins and Wuycheck, 1971; (2) Jorgensen et al., 1991; (3) Minnich, 1982; (4) Boyd and Goodyear, 1971; (5) Davis and Golley, 1963; (6) Drozdz, 1968; (7) Golley, 1960; (8) Kendeigh and West, 1965; (9) Golley, 1961; (10) Karasov, 1990; (11) Dice, 1922; (12) Robel et al., 1979; (13) Levey and Karasov, 1989.

Table 4-3. General Assimilation Efficiency (AE) Values (values expressed as mean [standard deviation]^n where n = number of studies)

Group	Prey/Forage	AE %	Reference
Birds			
	animals		
birds of prey	birds, small mammals	78 (5.2)^{16}	1,2,3,4
eagles, seabirds	fish	79 (4.5)^{9}	1,2,4,5
waterfowl	aquatic invertebrates	77 (8.4)^{3}	1
birds	terrestrial insects	72 (5.1)^{16}	1,5,6
	plants		
passerines	wild seeds	75 (9)^{11}	1
non-passerines	wild seeds	59 (13)^{25}	1
birds	cultivated seeds	80 (8)^{17}	1
birds	fruit pulp, skin	64 (15)^{31}	1
birds	fruit pulp, skin, seeds	51 (15)^{22}	1
birds	grasses, leaves	47 (9.6)^{3}	1*
grouse, ptarmigans	stems, twigs, pine needles	34 (5.3)^{8}	1,1
geese	emergents (e.g., spartina)	39 (9.1)^{4}	1*
ducks	aquatic vegetation	23 (5.3)^{5}	1*
geese, grouse	bulbs, rhizomes	56 (18)^{4}	1
Mammals			
	animals		
pinnipeds	fish	88 (1.1)^{5}	7,8
mammals	small birds, mammals	84 (6.5)^{4}	9,10,11
mammals	fish	91	12
small mammals	insects	87 (4.9)^{6}	11,13
	plants		
voles, mice	seeds, nuts	85 (7.3)^{8}	11,14
lemmings, voles	mature grasses	41 (9.1)^{5}	15
rabbits, voles, mice	green forbs	73 (7.6)^{8}	11,14,15
rabbits, voles, rats	"herbivory"	76 (7.6)^{5}	11,14,16

References: (1) Karasov, 1990; (1*) calculated from data presented in Appendix I of Karasov, 1990; (2) Stalmaster and Gessaman, 1982; (3) Koplin et al., 1980; (4) Castro et al., 1989; (5) Ricklefs, 1974; (6) Bryant and Bryant, 1988; (7) Ashwell-Erickson and Elsner, 1981; (8) Miller, 1978; (9) Litvaitis and Mautz, 1976; (10) Vogtsberger and Barrett, 1973; (11) Grodzinski and Wunder, 1975; (12) estimated by dividing 4.9 kcal/g gross energy for bony fishes (Table 4-1) by metabolizable energy of 4.47 reported for fish consumed by mammals (Nagy, 1987); (13) Barrett and Stueck, 1976; (14) Drozdz, 1968; (15) Batzli and Cole, 1979; (16) Drozdz et al., 1971.

Table 4-3 summarizes AEs for several different types of foods and species. Assimilation efficiency is a function of both the consumer species' physiology and the type of diet. Factors that reduce many species' ability to assimilate the energy contained in food include the ash content of the diet and the percentage of relatively indigestible organic materials such as chitin (arthropods) or cellulose (plants). The higher the ash content, the lower the AE, all else being equal.

Fat content also influences GE. For example, carbohydrates (approximately 4.3 kcal/g) and proteins (approximately 5.7 kcal/g) typically provide about half as many calories per gram as fat (approximately 9.5 kcal/g) (Peters, 1983). Thus, small changes in fat content of animal tissues or plant seeds cause significant changes in their caloric value. For example, just prior to fall migration, passerine birds have achieved peak fat deposition and average 7.8 kcal/g dry weight. Nonmigrating passerines (i.e., permanent residents or migratory species during nonmigrating seasons) average only 5.6 kcal/g dry weight. Two references with substantial compilation of data on caloric content of biological materials are Jorgensen et al. (1991) and Cummins and Wuycheck (1971). The latter includes extensive data on invertebrates.

Figure 4-7 provides a sample calculation of food ingestion rates using the methodology outlined above.

4.1.3. Soil and Sediment Ingestion

In this section, we review information on the ingestion of soil and sediment for the species included in this Handbook (and similar species). Despite the potential importance of soil and sediment ingestion as a route of exposure of wildlife to environmental contaminants, data to quantify these ingestion rates are limited at this time.

Figure 4-7. Example of Estimating Food Ingestion Rates for Wildlife Species From Free-Living Metabolic Rate and Dietary Composition: Male Mink

1. Estimate Field Metabolic Rate (FMR) [Equation 3-47]

$$FMR\ (kcal/day) = 0.6167\ (g\ Wt)^{0.862} = 0.6167\ (1{,}040)^{0.862} = 246\ (kcal/day)$$

2. Normalize to Body Weight (Wt) [Equation 3-40]

$$NFMR\ (kcal/g\text{-}day) = 246\ (kcal/day)/1{,}040\ (g\ Wt)^{a} = 0.24\ (kcal/g\text{-}day)$$

3. Estimate Average Metabolizable Energy (ME_{avg}) of Diet [Equation 4-12]

Dietary Item (k=5)	Proportion of Diet (P_k)[b]	Gross Energy (GE_k)[c] (kcal/g wet wt)	Assimilation Efficiency (AE_k)[d]	Metabolizable Energy (ME_k) (kcal/g wet wt) ($ME_k = GE_k \times AE_k$)	($P_k \times ME_k$)
Fish	0.85	1.2	0.91	1.1	0.93
Crustacea	0.04	1.1	0.87	0.96	0.038
Amphibia	0.03	1.2	0.91	1.1	0.033
Birds/ Mammals	0.06	1.8	0.84	1.5	0.090
Vegetation	0.02	1.3	0.73	0.95	0.019
ME_{avg} (kcal/g wet wt) = $\sum(P_k \times ME_k)$ = 1.1[e]					

4. Estimate Total Normalized Ingestion Rate (NIR_{total}) [Equation 4-11]

$$NIR_{total}\ (g/g\text{-}day) = \frac{0.24\ (kcal/g\text{-}day)}{1.1\ (kcal/g\ wet\ wt)\ (i.e.,\ ME_{avg})} = 0.22\ (g/g\text{-}day)$$

5. Estimate Prey-specific Normalized Ingestion Rates (e.g., NIR_{fish}) [Equation 4-10]

$$NIR_{fish}\ (g/g\text{-}day) = 0.85\ (P_{fish}) \times 0.22\ (g/g\text{-}day) = 0.19\ (g/g\text{-}day)$$

[a]Body weight for Montana population in the summer (Mitchell, 1961).
[b]Dietary composition based on Alexander (1977).
[c]Values from Tables 4-1 and 4-2 (for vegetation, assuming value for young grasses).
[d]Values from Table 4-3 (for vegetation, assuming green forbs; for crustacea, assuming equivalent AE for insects; for amphibia, assuming equivalent to mammals consuming fish).
[e]In this example, ME_{avg} is the same as the ME value for fish, which comprises 85 percent of the diet.

4.1.3.1. Background

Soil is ingested both intentionally and incidentally by many species of wildlife and can be a significant exposure pathway for some contaminants (Arthur and Alldredge, 1979; Garten, 1980). Many ungulates deliberately eat soil to obtain nutrients; some may travel a considerable distance to reach certain areas (salt licks) that are used by many animals. Some birds gather mud in their beaks for nest-building, and others consume it for calcium (Kreulen and Jager, 1984). Many animals can incidentally ingest soil while grooming, digging, grazing close to the soil, or feeding on items that are covered with soil (such as roots and tubers) or contain sediment (such as molluscs). Earthworms ingest soil directly; the soil in their guts may be an important exposure medium for animals that eat these organisms (Beyer et al., 1993).[c]

Soil ingestion rates have been estimated for only a few wildlife species and were not available in the published literature for most of the animals in this Handbook. The percentage of soil ingested is often estimated from the acid-insoluble ash content of wildlife scats or digestive tract contents. Scat analysis on small animals is often difficult because scat are small. Soil ingestion by large mammals also has been estimated using insoluble chemical tracers (Mayland et al., 1977) and using standard x-ray diffraction analysis (Garten, 1980).

4.1.3.2. Methods

Garten (1980) estimated the amount of soil in the gastrointestinal (GI) tract of a small mammal (the hispid cotton rat) using the following equation:

$$I = (S - F)W \qquad [4\text{-}22]$$

---

[c]Seed-eating birds often consume "grit" to aid in digestion, which makes them vulnerable to poisoning by granular formulations of pesticides and fertilizers. In this section, however, we restrict our discussion to soils and sediments, which are composed of much smaller particle sizes.

where I equals the amount of soil in the GI tract, S equals the ratio of insoluble ash to dry contents in the GI tract, F equals the ratio of insoluble ash to dry contents in fescue (the dominant vegetation in the rat's habitat), and W equals the dry weight of GI-tract contents.

It is also possible to estimate soil ingestion rates from the acid-insoluble ash content of the animal's scat because the percentage of acid-insoluble ash in mineral soil is much higher (usually at least 90 percent) than in plant or animal tissue (usually no more than a few percent). Beyer et al. (in press) used scat samples to estimate the fraction of soil in the diet for several species. The equation for this estimation approach is slightly more complicated than Equation 4-22, because it accounts for digestibility and the mineral content of the soil. They found a significant correlation between the measured and predicted relationships of the ratio of acid-insoluble ash to dry weight of scat and the percentage of soil in the diet.

4.1.3.3. Results

Percent soil in the diet for some of the selected and similar species included in Chapter 2 are included in Tables 4-4 and 4-5. Of the species studied, the sandpiper group, which feeds on mud-dwelling invertebrates, was found to have the highest rates of soil/sediment ingestion (30, 18, 17, and 7.3 percent of diet, respectively, for semipalmated, western, stilt, and least sandpipers, although only a single sample was analyzed for each species). Wood ducks also can ingest a high proportion of sediment (24 percent) with their food. Relatively high soil intakes were estimated for the raccoon (9.4 percent), an omnivore, and the woodcock (10.4 percent), which feeds extensively on earthworms. Other species that eat earthworms might be expected to exhibit similarly high soil intakes. The Canada goose, which browses on grasses, also exhibited a high percentage of soil in its diet (8.2 percent). Soil ingestion was lowest for the white-footed mouse, meadow vole, fox, and box turtle (<2, 2.4, 2.8, and 4.5 percent, respectively). Box turtles, tortoises, and other reptiles, however, have been known to intentionally ingest soil, perhaps for its nutrient content (Kramer, 1973; Sokal, 1971). Beyer et al.'s (in press) data should be used with caution, because error was introduced by estimating variables in

Table 4-4. Percent Soil or Sediment in Diet Estimated From Acid-Insoluble Ash of Scat

Species	Scat Samples[a]	% Insoluble Ash Mean (SE)	Range	Estimated % Digestibility of Diet	Estimated Percent Soil in Diet (dry weight)
Birds					
Canada goose	23	12 (1.5)	3.9 - 38	25	8.2
Mallard	88	6.9 (1.1)	0.36 - 47	30	<2
Wood duck	7	24 (13)	0 - 75	60	11
Blue-winged teal	12	2.3 (0.36)	0.72 - 5.1	60	<2
Ring-necked duck	6	0.72 (5.5)	0.50 - 1.2	60	<2
American woodcock	7	22 (5.5)	6.3 - 40	55	10.4
Semipalmated sandpiper	1	56		70	30
Western sandpiper	1	42		70	18
Stilt sandpiper	1	40		70	17
Least sandpiper	1	24		70	7.3
Mammals					
Red fox	7	14 (2.6)	4.8 - 25	70	2.8
Raccoon	4	28 (8.9)	13 - 50	70	9.4
White-footed mouse	9	8.5 (0.71)	5.7 - 11	65	<2
Meadow vole	7	8.9 (1.2)	4.2 - 14	55	2.4
Reptiles and Amphibians					
Eastern painted turtle	9	21 (2.9)	11 - 41	70	5.9
Box turtle	8	18 (6.5)	3.6 - 49	70	4.5

[a]For the sandpipers, the white-footed mouse, and the meadow vole, scat samples from more than one animal had to be combined into one sample to provide sufficient quantity for chemical analysis.

Source: Adapted from Beyer et al. (in press).

Table 4-5. Other Estimates of Percent Soil or Sediment in Diet

Species	Estimated % soil in diet (dry weight)	Reference
Jackrabbit	6.3	Arthur and Gates 1988
Hispid cotton rats	2.8	Garten 1980
Shorebirds	10-60	Reeder 1951

the equation (e.g., digestibility) and by the small samples they obtained from some of the smaller animals.

Other studies of soil ingestion by species similar to those presented in this Handbook are summarized in Table 4-5. Sediment has been found in the stomachs of white-footed mice (Garten, 1980) and ruddy ducks and shovelers (Goodman and Fisher, 1962). Sediment in the gut of tadpoles inhabiting highway drainages may be responsible for high concentrations of lead detected in these organisms (Birdsall et al., 1986).

4.1.3.4. Dose Equations

To estimate exposures to contaminants in soils or sediments from the data provided in Tables 4-4 and 4-5, Equation 4-23 (Figure 4-8) can be used. If the percent soil in the diet is measured on a dry-weight basis, as it usually is, total dietary intake should also be expressed on a dry-weight basis.

4.1.4. Air

Inhalation toxicity values and exposure estimates are usually expressed in units of concentration in air (e.g., mg/m^3) rather than as average daily doses. Assessment of the inhalation pathway becomes complicated if the toxicity values must be extrapolated from a test species (e.g., rat) to a different species (e.g., shrew). Inhalation toxicologists extrapolate toxicity values from species to species on the basis of the dose deposited and retained in the respiratory tract (the dose that is available for absorption, distribution,

Figure 4-8. Wildlife Oral Dose Equation for Soil or Sediment Ingestion Exposures

$$ADD_{pot} = \left(\sum_{k=1}^{m} (C_k \times FS \times IR_{total}(\text{dry weight}) \times FR_k)\right)/BW \qquad [4\text{-}23]$$

ADD_{pot} = Potential average daily dose (e.g., in mg/kg-day).

C_k = Average contaminant concentration in soils in the kth foraging area (e.g., in mg/kg dry weight).

FS = Fraction of soil in diet (as percentage of diet on a dry-weight basis divided by 100; unitless).

IR_{total} = Food ingestion rate on a dry-weight basis (e.g., in kg/day). Nagy's (1987) equations for estimating FI rates on a dry-weight basis (presented in Section 3.1) can be used to estimate a value for this factor. If the equations for estimating FI rates on a wet-weight basis presented in Section 4.2 are used, conversion to ingestion rates on a dry-weight basis would be necessary.

FR_k = Fraction of total food intake from the kth foraging area (unitless).

BW = Body weight (e.g., in kg).

m = Total number of foraging areas.

metabolism, and elimination). Once the appropriate toxicity benchmark (in terms of dose) has been estimated for the species of concern (e.g., shrew), the corresponding air concentration is estimated based on the respiratory physiology of that species. EPA uses this approach because it can account for nonlinear relationships between exposure concentrations, inhaled dose, and dose to the target organ(s). Because of the complexities associated with the extrapolations, an inhalation toxicologist should be consulted when assessing this pathway.

The dose deposited, retained, and absorbed in the respiratory tract is a function of species anatomy and physiology as well as physicochemical properties of the contaminant. The assessor will need to consider factors such as the target species' airway

size, branching pattern, breathing rate (volume and frequency), and clearance mechanisms, as well as whether the contaminant is a gas or aerosol and whether its effects are systemic or confined to the respiratory tract. Key information on the contaminant includes particle size distribution (for aerosols), temperature and vapor pressure (for gaseous agents), and pharmacokinetic data (e.g., air/blood partition coefficients, metabolic parameters). While physiologically based pharmacokinetic models have been useful for these calculations, they are available for only a few laboratory species. These issues are discussed in detail in *Interim Methods for Development of Inhalation Reference Concentrations* (U.S. EPA, 1990). Although the document specifically describes how to calculate inhalation reference concentrations for humans, the principles are useful for any air-breathing species.

4.1.5. Dermal Exposure

Dermal toxicity values and exposure estimates are usually expressed as an absorbed dose resulting from skin contact with a contaminated medium. This exposure pathway can be of great importance to wildlife, particularly when an animal is directly sprayed (Driver et al., 1991). Dermal exposures may also be a concern for wildlife that swim or burrow. Dermal absorption of contaminants is a function of chemical properties of the contaminated medium, the permeability of the animals' integument, the area of integument in contact with the contaminated medium, and the duration and pattern of contact. A full discussion of quantifying absorbed dose through the skin is beyond the scope of this document, and many of the required parameters have not been measured for wildlife species. Readers interested in pursuing this exposure pathway may find useful information in *Dermal Exposure Assessment: Principles and Applications* (U.S. EPA, 1992c).

4.2. ANALYSIS OF UNCERTAINTY

In the risk assessment process, several sources of uncertainty should be evaluated, including the uncertainties associated with the exposure assessment and the toxicity

assessment. The following sections discuss three sources of uncertainty related to the exposure assessment: (1) natural variability in the population in question, (2) uncertainty about population parameters as a consequence of limits on sampling the population (i.e., sampling uncertainty), and (3) uncertainty about models used to estimate values. There are other categories of uncertainties associated with site-specific risk assessments that also need to be considered (e.g., selection of substances of concern, data gaps, toxicity assessments). Additional discussion of sources and treatment of uncertainty is available in *Framework for Ecological Risk Assessment* (U.S. EPA, 1992a) and *Guidelines for Exposure Assessment* (U.S. EPA, 1992b). For treatment of site-specific uncertainties in particular, see the *Risk Assessment Guidance for Superfund, Volume I; Human Health Evaluation Manual (Part A) Interim Final* (U.S. EPA, 1989).

4.2.1. Natural Variation

As a review of the data provided in this Handbook makes clear, there is natural variation in the values exhibited by populations for all exposure factors. Population values for some parameters (e.g., body weight) can assume a normal distribution that can be characterized by a mean and variance. We have provided the standard deviation (SD) as the measure of population variance whenever possible. If a risk assessor is concerned with exposures that might be experienced by animals exhibiting characteristics near the extremes of the population's distribution, the SD can be used with the mean value for a normally distributed population to estimate the parameter value for animals with characteristics at specified points in the distribution (e.g., 95th percentile). We also have provided the total range of values reported for each of the exposure factors whenever possible. The ranges can be particularly helpful for parameters that are not normally distributed, such as home-range size.

Another aspect of natural variation, however, is that different populations or the same population at different times or locations can exhibit different mean values for any parameter (e.g., body weight) and even different variances. We have tried to present enough data to give users of the Handbook a feel for the range of values that different populations can assume depending on geographic location, season, and other factors

(e.g., habitat quality). We recommend that risk assessors review the data presented in the Appendix to appreciate the potential for variation in the parameters of interest.

Dietary composition, in particular, can vary markedly with season, location, and availability of prey or forage. The latter factor varies with local conditions and usually is not available for risk assessments. Thus, it can be one of the larger sources of uncertainty in wildlife exposure assessments. State and local wildlife experts might be able to help specify the local dietary habits of a species of concern and should be consulted if screening analyses suggest that exposure at levels of concern is a possibility.

4.2.2. Sampling Uncertainty

Another source of uncertainty in exposure estimates results from limited sampling of populations. Estimates of a population mean and variance become more accurate as the number of samples taken from the population increases. With only a few samples from a population, our confidence that the true population mean is near the estimated mean is low; as the number of samples increases, our confidence increases. The standard error (SE) of the mean is equal to the variance of the population (σ) divided by the square root of the sample size (n). SE can be estimated from the standard deviation of the population divided by the square root of n. SE can be used to calculate confidence limits on an estimate of the mean value for a population. For a normally distributed population, the 95-percent confidence limit of the mean is the estimated mean plus or minus approximately 2 SEs for reasonable sample sizes (e.g., n = at least 20).

Sampling uncertainty occurs in many areas of exposure assessment. Contaminant concentration is one key parameter subject to sampling error. For site-specific risk assessments, as the number of environmental samples increases, the uncertainty about the true distribution of values decreases. Even with large sample sizes, however, this uncertainty can dominate the total uncertainty in the exposure assessment. Other parameters subject to sampling error are the exposure factors presented in this Handbook. One of our criteria for selecting values from the Appendix to include in Chapter 2 was a sample size large enough to ensure that SE was only a few percent of the mean value.

4.2.3. Model Uncertainty

Two main types of models are likely to be used in wildlife exposure assessments: (1) allometric models to predict contact-rate parameters (e.g., food ingestion rates) and (2) fate and transport models to predict contaminant concentrations to which wildlife are exposed.

In this Handbook, we have tried to present statistical confidence limits associated with allometric equations whenever possible. To reduce the confidence limits associated with allometric models, it is important to use a model derived from the smallest and most similar taxonomic/dietary group appropriate for the extrapolation. For example, to estimate a metabolic rate for a red-winged blackbird, it is preferable to use a metabolic rate model derived from data on passerines rather than a model derived from data on many different groups of birds (e.g., raptors, seabirds, geese), and best to use a model for Icterids (the subfamily to which the red-winged blackbird belongs) rather than a model derived from data on passerines.

Uncertainties in exposure models can include how well the exposure model or its mathematical expression approximates the true relationships in the field as well as how realistic the exposure model assumptions are for the situation at hand. Judicious field sampling (e.g., of contaminant concentrations in certain prey species) can help calibrate or confirm estimates in the exposure model (e.g., food-chain exposures). Often a sensitivity analysis can help a risk assessor identify which model parameters and assumptions are most important in determining risk so that attention can be focused on reducing uncertainty in these elements.

4.3. REFERENCES

Alexander, G. (1977) Food of vertebrate predators on trout waters in north central lower Michigan. Michigan Acad. 10: 181-195.

Arthur, W. J., III; Alldredge, A. W. (1979) Soil ingestion by mule deer in north central Colorado. J. Range Manage. 32: 67-70.

Arthur W. J., III; Gates, R. J. (1988) Trace element intake via soil ingestion in pronghorns and in black-tailed jackrabbits. J. Range Manage. 41: 162-166.

Ashwell-Erickson, S.; Elsner, R. (1981) The energy cost of free existence for Bering Sea harbor and spotted seals. In: Hood, D. W.; Calder, J. A., eds. The Eastern Bering Sea shelf: oceanography and resources: v. 2, Washington, DC: Department of Commerce; pp. 869-899.

Barrett, G. W.; Stueck, K. L. (1976) Caloric ingestion rate and assimilation efficiency of the short-tailed shrew, *Blarina brevicauda*. Ohio J. Sci. 76: 25-26.

Batzli, G. O.; Cole, F. R. (1979) Nutritional ecology of microtine rodents: digestibility of forage. J. Mammal. 60: 740-750.

Bell, G. P. (1990) Birds and mammals on an insect diet: a primer on diet composition analysis in relation to ecological energetics. Studies Avian Biol. 13: 391-415.

Beyer, N.; Connor, E.; Gerould, S. (In press) Estimates of soil ingestion by wildlife. J. Wildl. Manage. 1993.

Beyer, W. N.; Stafford, C.; Best, D. (1993) Survey and evaluation of contaminants in earthworms from confined disposal facilities for dredged material in the Great Lakes. Environ. Monit. Assess. 24: 151-165.

Birdsall, C. W.; Grue, C. E.; Anderson, A. (1986) Lead concentrations in bullfrog *Rana catesbeiana* and green frog *R. clamitans* inhabiting highway drainages. Environ. Poll. (Series A) 40: 233-247.

Boyd, C. E.; Goodyear, C. P. (1971) Nutritive quality of food in ecological systems. Arch. Hydrobiol. 69: 256-270.

Bryant, D. M.; Bryant, V. M. (1988) Assimilation efficiency and growth of nestling insectivores. Ibis 130: 268-274.

Buchsbaum, R.; Valiela, I. (1987) Variability in the chemistry of estuarine plants and its effect on feeding by Canada geese. Oecologia (Berl.) 73: 146-153.

Buchsbaum, R.; Wilson, J.; Valiela, I. (1986) Digestibility of plant constituents by Canada geese and Atlantic brant. Ecology 67: 386-393.

Castro, G.; Stoyan, N.; Myers, J. P. (1989) Assimilation efficiency in birds: a function of taxon or food type? Comp. Biochem. Physiol. A. Comp. Physiol. 92: 271-278.

Collopy, M. W. (1975) Behavioral and predatory dynamics of kestrels wintering in the Arcata Bottoms [master's thesis]. Arcata, CA: Humboldt State University.

Congdon, J. D.; Dunham, A. E.; Tinkle, D. W. (1982) Energy budgets and life histories of reptiles. In: Gans, C., ed. Biology of the reptilia: v. 13. New York, NY: Academic

Press; pp. 233-271.

Cummins, K. W.; Wuycheck, J. C. (1971) Caloric equivalents for investigations in ecological energetics. Stuttgart, West Germany: International Association of Theoretical and Applied Limnology.

Davis, D. E.; Golley, F. B. (1963) Principles in mammalogy. New York, NY: Van Nostrand Rheinhold.

Dice, L. R. (1922) Some factors affecting the distribution of the prairie vole, forest deer mouse, and prairie deer mouse. Ecology 3: 29-47.

Driver, C. J.; Ligotke, M. W.; Van Voris, P., et al. (1991) Routes of uptake and their relative contribution to the toxicological response of northern bobwhite (*Colinus virginianus*) to an organophosphate pesticide. Environ. Toxicol. Chem. 10: 21-33.

Drozdz, A. (1968) Digestibility and assimilation of natural foods in small rodents. Acta Theriol. 13: 367-389.

Drozdz, A.; Górecki, A.; Grodzinski, W.; et al. (1971) Bioenergetics of water voles (*Arvicola terrestris* L.) from southern Moravia. Ann. Zool. Fennici 8: 97-103.

Duke, G. E.; Mauro, L.; Bird, D. M. (1987) Physiology. In: Pendleton, B. A.; Millsap, B. A.; Cline, K. W.; et al., eds. Raptor management techniques manual. Washington, DC: Institute for Wildlife Research, National Wildlife Federation. Sci. Tech. Ser. No. 10; pp. 262-267.

Garten, C. T. (1980) Ingestion of soil by hispid cotton rats, white-footed mice, and eastern chipmunks. J. Mammal. 61: 136-137.

Golley, F. B. (1960) Energy dynamics of a food chain of an old-field community. Ecol. Monogr. 30: 187-206.

Golley, F. B. (1961) Energy values of ecological materials. Ecology 42: 581-584.

Goodman, D. C.; Fisher, H. I. (1962) Functional anatomy of the feeding apparatus in waterfowl (Aves: Anatidae). Carbondale, IL: Southern Illinois University Press; 193 pp.

Górecki, A. (1975) Calorimetry in ecological studies. In: Grodzinski, W.; Klekowski, R. Z.; Duncan, A., eds. IPB handbook no. 24: methods for ecological energetics. Oxford, London, Edinburgh, Melbourne: Blackwell Scientific Publications; pp. 275-281.

Grodzinski, W.; Wunder, B. A. (1975) Ecological energetics of small mammals. In: Golley, F. B.; Petrusewicz, K.; Ryszkowski, L., eds. Small mammals: their productivity and population dynamics. Cambridge, MA: Cambridge University Press; pp. 173-204.

Hunt, G. L., Jr. (1972) Influence of food distribution and human disturbance on the

reproductive success of herring gulls. Ecology 53: 1051-1061.

Jorgensen, S. E.; Nielsen, S. N.; Jorgensen, L. A. (1991) Handbook of ecological parameters and ecotoxicology. Amsterdam, The Netherlands: Elsevier Science Publishers.

Karasov, W. H. (1990) Digestion in birds: chemical and physiological determinants and ecological implications. Studies in Avian Biology 13: 391-415.

Kendeigh, S. C.; West, G. C. (1965) Caloric values of plant seeds eaten by birds. Ecology 46: 553-555.

Koplin, J. R.; Collopy, M. W.; Bammann, A. R.; et al. (1980) Energetics of two wintering raptors. Auk 97: 795-806.

Kramer, D. C. (1973) Geophagy in *Terrepene ornata ornata* Agassiz. J. Herpetol. 7: 138-139.

Kreulen, D. A.; Jager, T. (1984) The significance of soil ingestion in the utilization of arid rangelands by large herbivores, with special reference to natural licks on the Kalahari pans. In: International symposium on herbivore nutrition in the subtropics and tropics (1983: Pretoria, South Africa). Draignall, South Africa: Science Press; pp. 204-221.

Levey, D. J.; Karasov, W. H. (1989) Digestive responses of temperate birds switched to fruit or insect diets. Auk 106: 675-686.

Litvaitis, J. A.; Mautz, W. W. (1976) Energy utilization of three diets fed to a captive red fox. J. Wildl. Manage. 40: 365-368.

Mayland, H. F.; Shewmaker, G. E.; Bull, R. C. (1977) Soil ingestion by cattle grazing crested wheatgrass. J. Range Manage. 30: 264-265.

Miller, L. K. (1978) Energetics of the northern fur seal in relation to climate and food resources of the Bering Sea. Nat. Tech. Inf. Serv. P. B. 275-96.

Mitchell, J. L. (1961) Mink movements and populations on a Montana river. J. Wildl. Manage. 25: 48-54.

Minnich, J. E. (1982) The use of water. In: Gans, C.; Pough, F. H., eds. Biology of the reptilia, physiology C; physiological ecology: v. 12. New York, NY: Academic Press; pp. 325-395.

Nagy, K. A. (1987) Field metabolic rate and food requirement scaling in mammals and birds. Ecol. Monogr. 57: 111-128.

Odum, E. P.; Marshall, S. G.; Marples, T. G. (1965) The caloric content of migrating birds. Ecology 46: 901-904.

Peters, R. H. (1983) The ecological implications of body size. Cambridge, England: Cambridge University Press.

Pierotti, R.; Annett, C. (1987) Reproductive consequences of dietary specialization and switching in an ecological generalist. In: Kamil, A. C.; Krebs, J.; H. R. Pulliam, eds. Foraging behavior. New York, NY: Plenum Press; pp. 417-442.

Reeder, W. G. (1951) Stomach analysis of a group of shorebirds. Condor 53: 43-45.

Ricklefs, R. E. (1974) Energetics of reproduction in birds. In: Paynter, R. A., ed. Avian energetics. Cambridge, MA: Nuttall Ornithological Club.

Robel, R. J.; Bisset, A. R.; Dayton, A. D.; et al. (1979) Comparative energetics of bobwhites on six different foods. J. Wildl. Manage. 43: 987-992.

Sokal, O. M. (1971) Lithophagy and geophagy in reptiles. J. Herpetol. 5: 69-71.

Stalmaster, M. V.; Gessaman, J. A. (1982) Food consumption and energy requirements of captive bald eagles. J. Wildl. Manage. 46: 646-654.

Thayer, G. W.; Schaaf, W. E.; Angelovic, J. W.; et al. (1973) Caloric measurements of some estuarine organisms. Fishery Bull. 71: 289-296.

Tyler, A. V. (1973) Caloric values of some North Atlantic invertebrates. Mar. Biol. 19: 258-261.

U. S. Environmental Protection Agency. (1989) Risk assessment guidance for Superfund: volume I - human health evaluation manual, interim final. Washington, DC: Office of Solid Waste, Office of Emergency and Remedial Response; EPA report no. EPA/540/1-89/002.

U. S. Environmental Protection Agency. (1990) Interim methods for development of inhalation reference concentrations, review draft. Washington, DC: Office of Research and Development; EPA report no. EPA/600/8-90/066A.

U. S. Environmental Protection Agency. (1992a) Framework for ecological risk assessment. Washington, DC: Risk Assessment Forum; EPA report no. EPA/630/R-92/001.

U. S. Environmental Protection Agency. (1992b) Guidelines for exposure assessment. Washington, DC: Science Advisory Board; EPA report no. EPA/600/Z-92/001.

U. S. Environmental Protection Agency. (1992c) Dermal exposure assessment: principles and applications, interim report. Washington, DC: Office of Research and Development; EPA report no. EPA/600/8-91/001B.

Vogtsberger, L. M.; Barrett, G. W. (1973) Bioenergetics of captive red foxes. J. Wildl. Manage. 37: 495-500.