U.S. DEPARTMENT OF ENERGY | Legacy Management

Fact Sheet

UMTRCA Title I

Lakeview, Oregon, Processing/Disposal Site

This fact sheet provides information about the Uranium Mill Tailings Radiation Control Act of 1978 Title I processing site and disposal site near Lakeview, Oregon. This site is managed by the U.S. Department of Energy Office of Legacy Management.

Site Description and History

The Lakeview processing site is a former uranium-ore processing facility located approximately 1.5 miles north-northwest of the town of Lakeview in Lake County, Oregon, and 16 miles north of the California/Oregon border. The uranium milling process produced radioactive tailings, a predominantly sandy material. Lakeview Mining Company built the mill in 1958 and operated the facility for 3 years. No uranium ore was processed at the site after 1961. Kermac Nuclear Fuels Corporation owned the mill from 1961 to 1968, when it was purchased by Atlantic Richfield Company. Atlantic Richfield sold the site in 1974. A lumber company purchased the mill site property in 1978 and used some of the former uranium mill buildings and raffinate ponds in its operations.

The uppermost aquifer at the site consists of lake sediments that interfinger with sands and gravels shed from nearby uplands. These sediments are hydraulically connected but partially separated by the layers of clayey lake sediments. In the area of the former processing site and in areas south of the site, groundwater flows southwest at rates ranging from 50 to 160 feet per year. Groundwater from a geothermal artesian source northeast of the site flows southwest beneath the western portion of the site; the geothermal groundwater also feeds springs that surface north of the site.

Regulatory Setting

Congress passed the Uranium Mill Tailings Radiation Control Act (UMTRCA) in 1978 (Public Law 95-604), and DOE remediated 22 inactive uranium-ore processing sites under the Uranium Mill Tailings Remedial Action Project in accordance with standards promulgated by the U.S. Environmental Protection Agency in Title 40 *Code of Federal Regulations* (CFR), Part 192. Subpart B of 40 CFR 192 regulated cleanup of contaminated groundwater

Locations of the Lakeview, Oregon, Sites

at the processing sites. The radioactive materials were encapsulated in U.S. Nuclear Regulatory Commission–approved disposal cells. The U.S. Nuclear Regulatory Commission general license for UMTRCA Title I sites is established in 10 CFR 40.27. The Lakeview disposal site was included under the general license in 1995.

Processing Site

The 258-acre former processing site includes areas formerly occupied by a tailings pond and seven raffinate ponds that

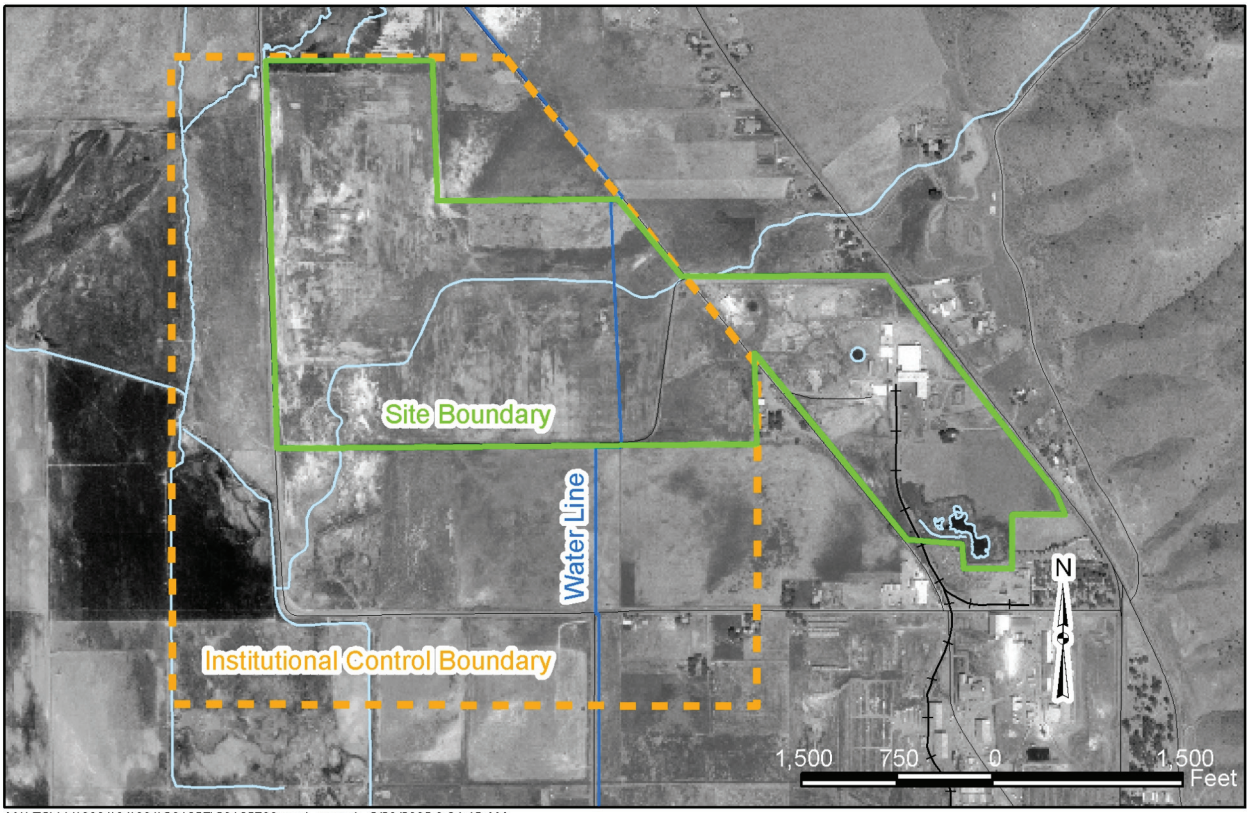

M:\LTS\111\0001\04\001\S01657\S0165700.mxd carverh 2/28/2005 9:34:45 AM

Institutional Control Boundary, Site Boundary, and Water Line at the Lakeview Processing Site

covered a total of 69 acres, a 30-acre tailings pile, and mill buildings. Raffinate is the spent solution remaining after removal of uranium by solvent extraction. From 1986 to 1988, all mill tailings and other process-related solid waste were removed from the site and placed in an engineered disposal cell 7 miles northwest of Lakeview.

Shallow groundwater in the former mill site area has elevated concentrations of arsenic, boron, chloride, manganese, sodium, and sulfate. These constituents appear to derive from several sources.

Most of the soil in the Lakeview area has high salt content. High concentrations of chloride, manganese, sodium, and sulfate in groundwater probably came from salts that leached from the soil when water seeped into the ground from the ponds used during uranium-ore processing and lumber production. Similar concentrations of these constituents have been identified in groundwater samples from other locations that were not influenced by past milling operations. Groundwater from the geothermal springs northeast of the site flows beneath the western portion of the site and contributes elevated levels of arsenic and boron to local groundwater. Concentrations of these constituents are higher in geothermal spring water than in groundwater on the former processing site, and their continued presence is attributed to the geothermal activity. Constituents in the mill tailings pile probably leached into groundwater. However, the uranium mill operated only 3 years and ceased operations more than 40 years ago, and the contaminant source (the tailings pile) was removed in 1988.

Compliance Strategy

DOE established institutional controls to ensure protection of human health and the environment and continues to conduct a groundwater monitoring program at the Lakeview site. Concentrations of all 40 CFR 192 constituents identified in groundwater beneath the former Lakeview processing site have declined to levels below their respective groundwater quality standards. Therefore, the proposed compliance strategy for the Lakeview site is no remediation, and no further actions, including groundwater monitoring. However, because sulfate and manganese are not included as regulated constituents and because their presence at elevated concentrations in groundwater downgradient of the site is probably at least partially attributable to the uranium-milling operations, DOE will continue to monitor these constituents as a best management practice and will maintain the institutional controls to ensure protectiveness.

Institutional Controls

Institutional controls at the Lakeview processing site are safeguards that protect human health and the environment by limiting access to groundwater potentially affected by mill site related activities. An institutional control boundary was established around the western part of the former mill site that includes land within and extending beyond probable mill site-influenced groundwater as defined by a groundwater plume of elevated sulfate concentrations. The controls consist of a requirement for hookup to a domestic water line and a requirement for the minimum depth of a domestic well.

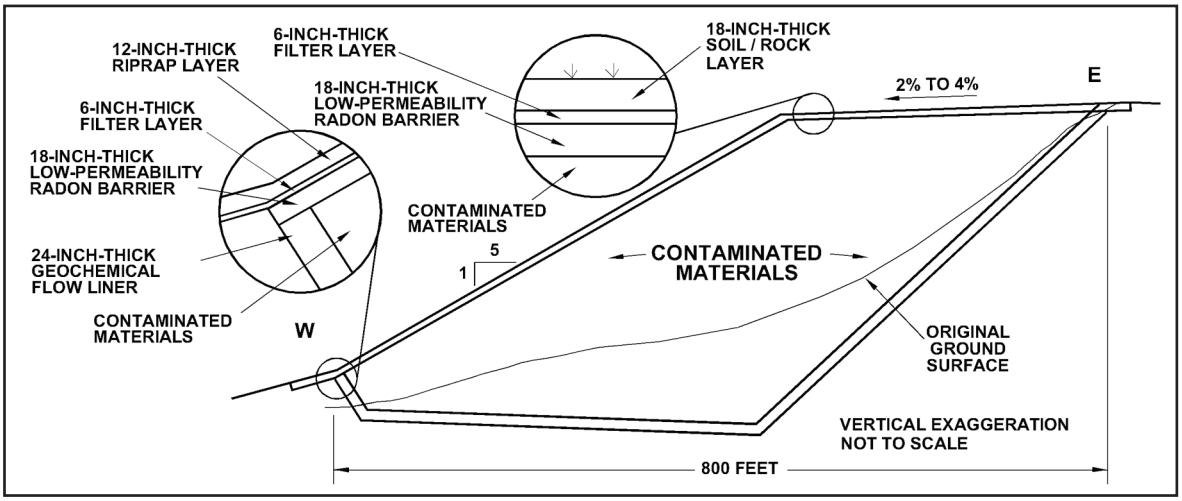

West-East Cross Section of the Lakeview Disposal Cell

Because of variations in the materials that compose the aquifer and because the contaminants have various sources, water influenced by site related activities is not uniformly distributed in area or depth throughout the uppermost aquifer in the region. Water quality is generally better at depths greater than 100 feet below ground surface, though it is poor enough at some locations that private well users install some type of treatment system. Water quality is improved in wells that are several hundred feet deep.

DOE negotiated with the City of Lakeview and Lake County to increase the capacity of a domestic water line under construction in the institutional control area and funded the cost of the increase. In return, both the City and County passed ordinances requiring future land-owners inside the institutional control boundary to obtain hookups to the new domestic water line or to drill a well to a depth that ensures satisfactory water quality. The Oregon Water Resources Department, the state agency responsible for ensuring that domestic well applications are reviewed and approved before drilling permits are issued, passed an ordinance requiring all new domestic wells within the institutional control boundary to be screened at a minimum depth of 250 feet below ground surface.

Disposal Site

The Lakeview disposal site is approximately 7 miles northwest of the town of Lakeview on land historically known as the Collins Ranch. The predominant land use in the area is grazing; the region is sparsely populated.

The cell is located near the northern end of Goose Lake Valley, a large, flat mountain valley at an elevation of 4,950 feet above sea level. Vegetation consists of pine forest in the higher mountain areas and grasses, sage, and scrub brush in the foothills and valley. The disposal site is underlain by as much as 1,000 feet of sand, silt, and lakebed clay. Depth to bedrock is unknown but is estimated to be more than 1,000 feet below ground surface. Depth to groundwater beneath the disposal cell is about 100 feet.

Disposal Cell Design

The disposal cell measures approximately 1,050 feet by 800 feet and occupies an area of 16 acres on the 40-acre site. The cell contains about 926,000 cubic yards of contaminated material with a total activity of 42 curies of radium-226. A wire fence with warning signs surrounds the cell.

The cell is on a hillside and was excavated to contain a portion of the contaminated materials below the original grade. Contaminated materials were placed on a geochemical flow liner of low-permeability clayey soil.

The cell cover is a multicomponent system designed to encapsulate and isolate the contaminated materials. The cover consists of (1) a low-permeability radon barrier (first layer placed over compacted tailings), (2) a sand filter/drainage layer, and (3) a soil/rock matrix layer on the top and rock (riprap) on the side slopes to protect against wind and water erosion. The top of the disposal cell supports native brush and grasses.

The cell design promotes rapid runoff of precipitation to minimize leachate. Runoff flows down the 20 percent side slopes into a rock-lined diversion channel on the north and a rock-lined toe drain on the west. The channel and the drains are armored with rock to dissipate energy and reduce the potential for erosion.

Legacy Management Activities

The DOE Office of Legacy Management (LM) will continue to monitor groundwater near the processing site and to maintain institutional controls to ensure continued protection of human health and the environment.

LM manages the disposal site according to a site-specific Long-Term Surveillance Plan to ensure that the disposal cell systems continue to prevent release of contaminants to the environment. Under provisions of this plan, LM conducts annual inspections of the site to evaluate the conditions of surface features, performs site maintenance as necessary,

and monitors groundwater to verify the continued integrity of the disposal cell.

In accordance with 40 CFR 192.32, the disposal cell is designed to be effective for 1,000 years, to the extent reasonably achievable, and, in any case, for at least 200 years. However, the general license has no expiration date, and LM's responsibility for the safety and integrity of the Lakeview disposal cell will last indefinitely.

Contacts

Site-specific documents related to the Lakeview processing and disposal site are available on the LM website at http://www.lm.doe.gov/Lakeview/Disposal/Sites.aspx (disposal site), and http://www.lm.doe.gov/Lakeview/Processing/Sites.aspx (processing site).

For more information about LM activities at the Lakeview processing and disposal site, contact:

U.S. Department of Energy
Office of Legacy Management
2597 Legacy Way, Grand Junction, CO 81503

(970) 248-6070 (monitored continuously), or
(877) 695-5322 (toll-free)