Appendix A

NFSS Vicinity Property Q

This page intentionally left blank

Assessment Data

Excerpt from Comprehensive Radiological Survey
Off-Site Property Q
Niagara Falls Storage Site

This page intentionally left blank

BECHTEL - OAK RIDGE
LIBRARY

COMPREHENSIVE RADIOLOGICAL SURVEY

OFF-SITE PROPERTY Q
NIAGARA FALLS STORAGE SITE
LEWISTON, NEW YORK

Prepared for

U.S. Department of Energy
as part of the
Formerly Utilized Sites -- Remedial Action Program

B.P. Rocco

Project Staff

J.D. Berger
A.J. Boerner
W.D. Carden*
L.W. Cole
R.D. Condra
G.R. Foltz
R.C. Gentry
W.C. Helton
C.M. Plott
T.J. Sowell
C.F. Weaver

Prepared by

Radiological Site Assessment Program
Manpower Education, Research, and Training Division
Oak Ridge Associated Universities
Oak Ridge, Tennessee 37830

FINAL REPORT

July 1983

This report is based on work performed under contract number DE-AC05-76OR00033 with the Department of Energy.

*Industrial Safety and Applied Health Physics Division, Oak Ridge National Laboratory

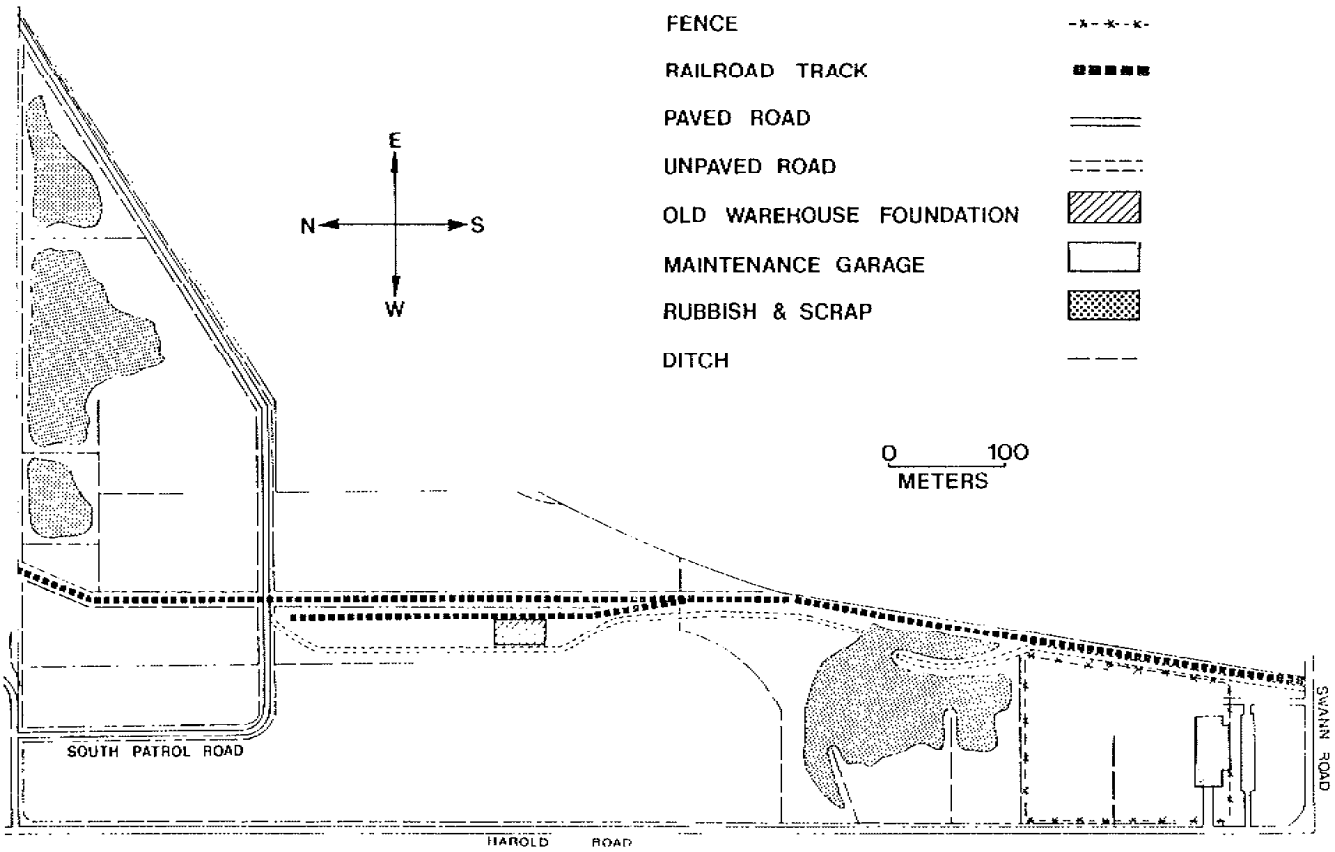

FIGURE 2. Plan View of Niagara Falls Storage Site Off-Site Property Q, Indicating Prominent Surface Features.

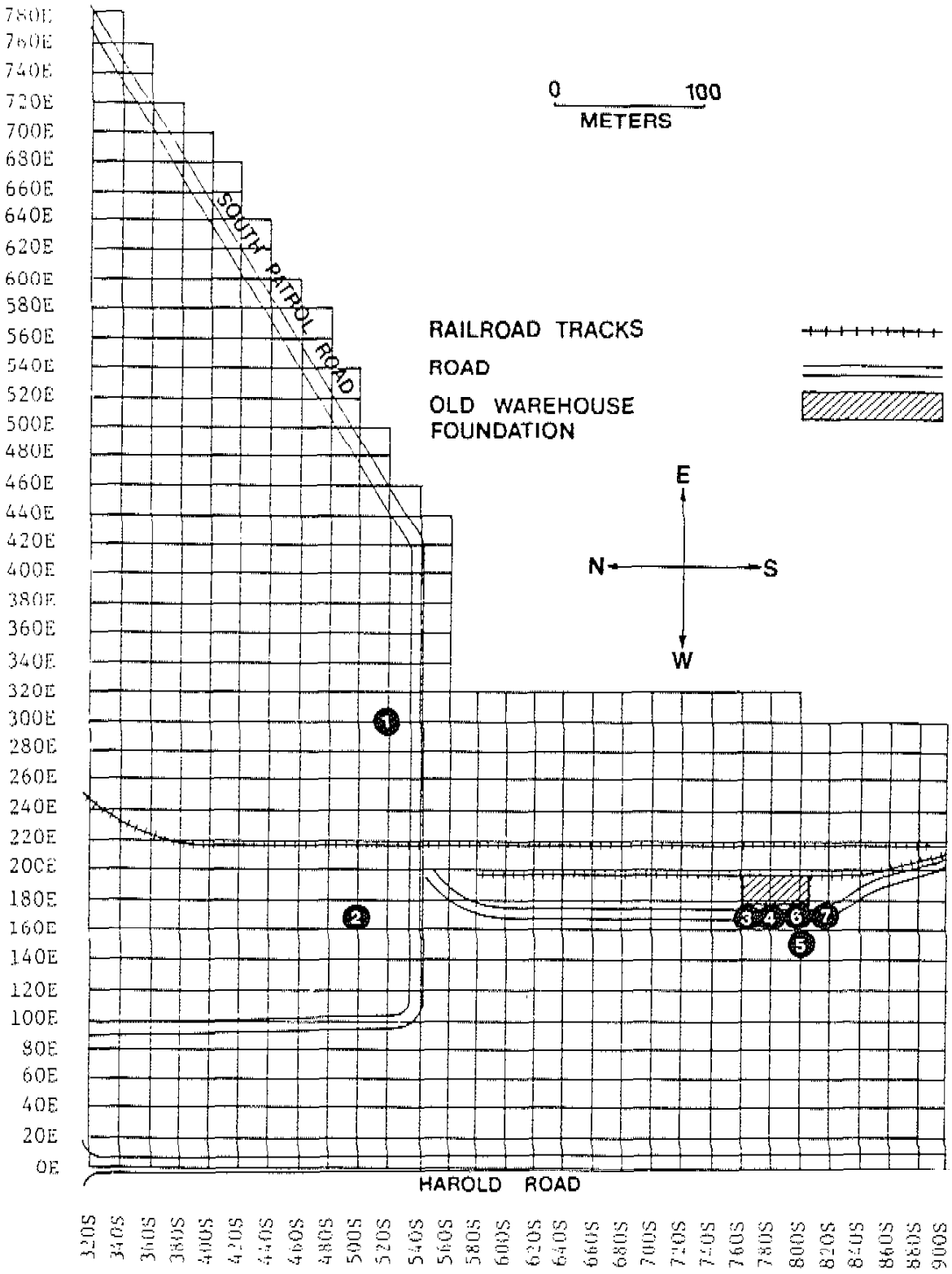

FIGURE 3. Map of the Northern Portion of Property Q Indicating the Grid System and Areas of Elevated Direct Radiation Levels.

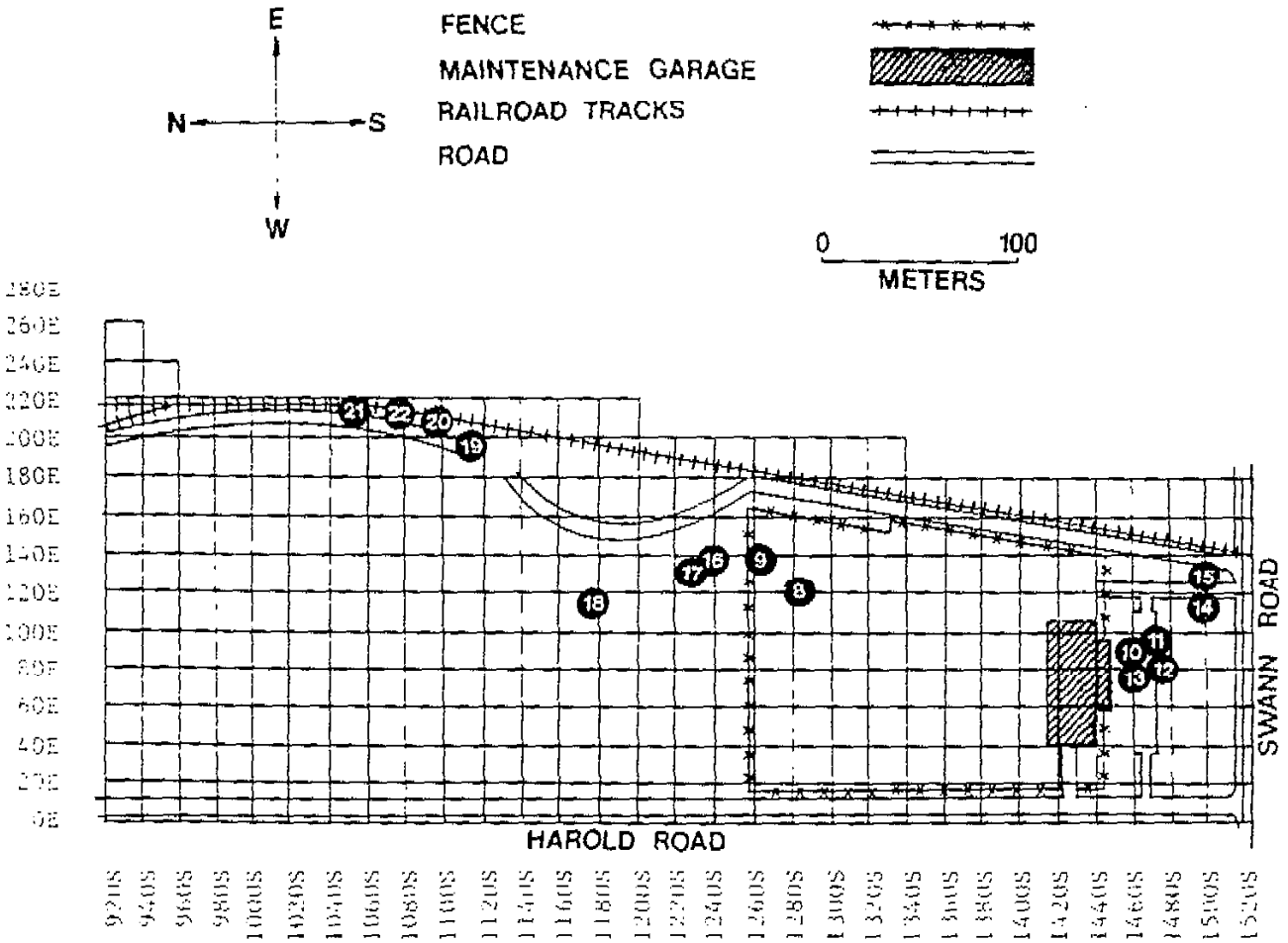

FIGURE 4. Map of the Southern Portion of Property Q Indicating the Grid System and Areas of Elevated Direct Radiation Levels.

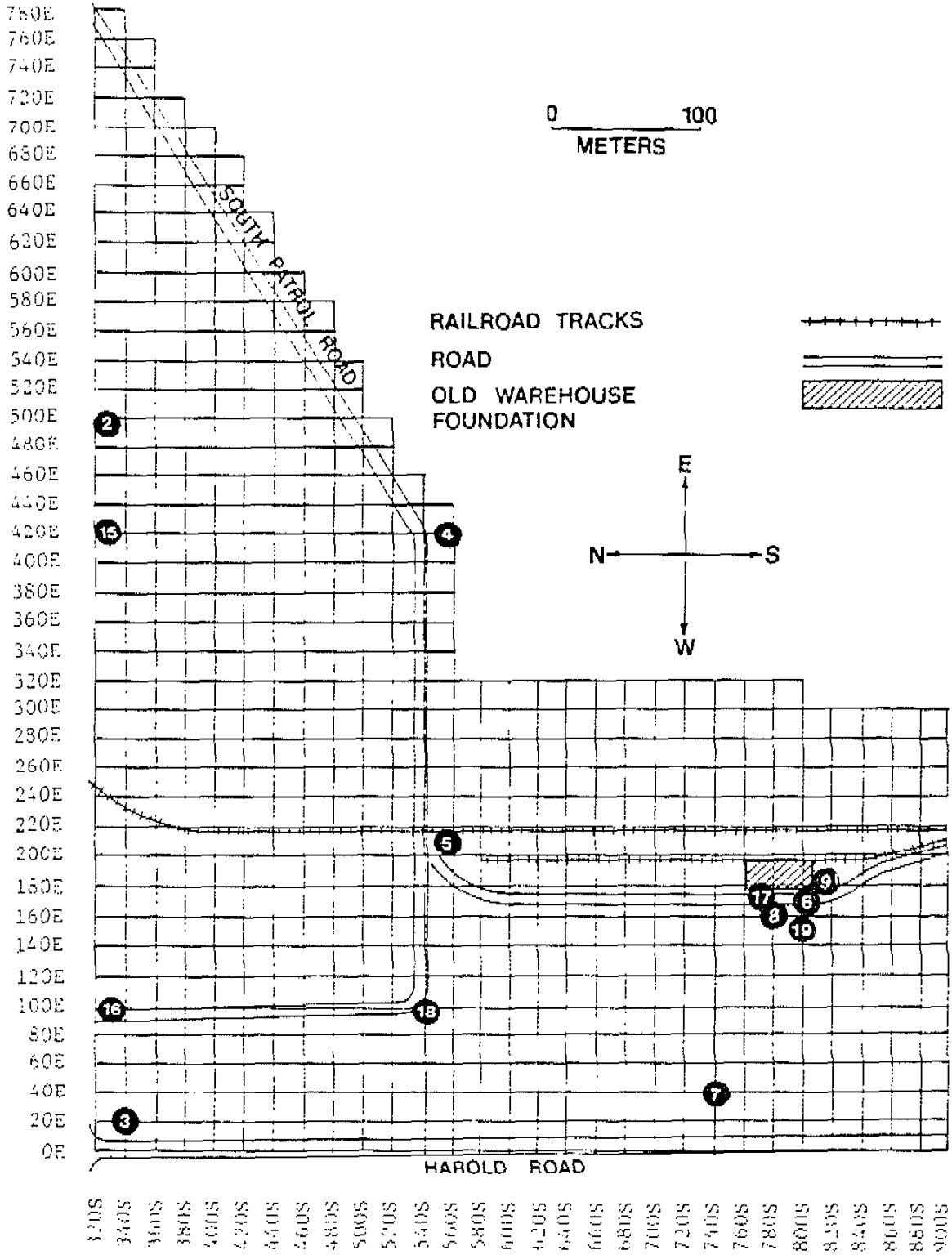

FIGURE 5. Borehole Locations on the Northern Portion of Property Q.

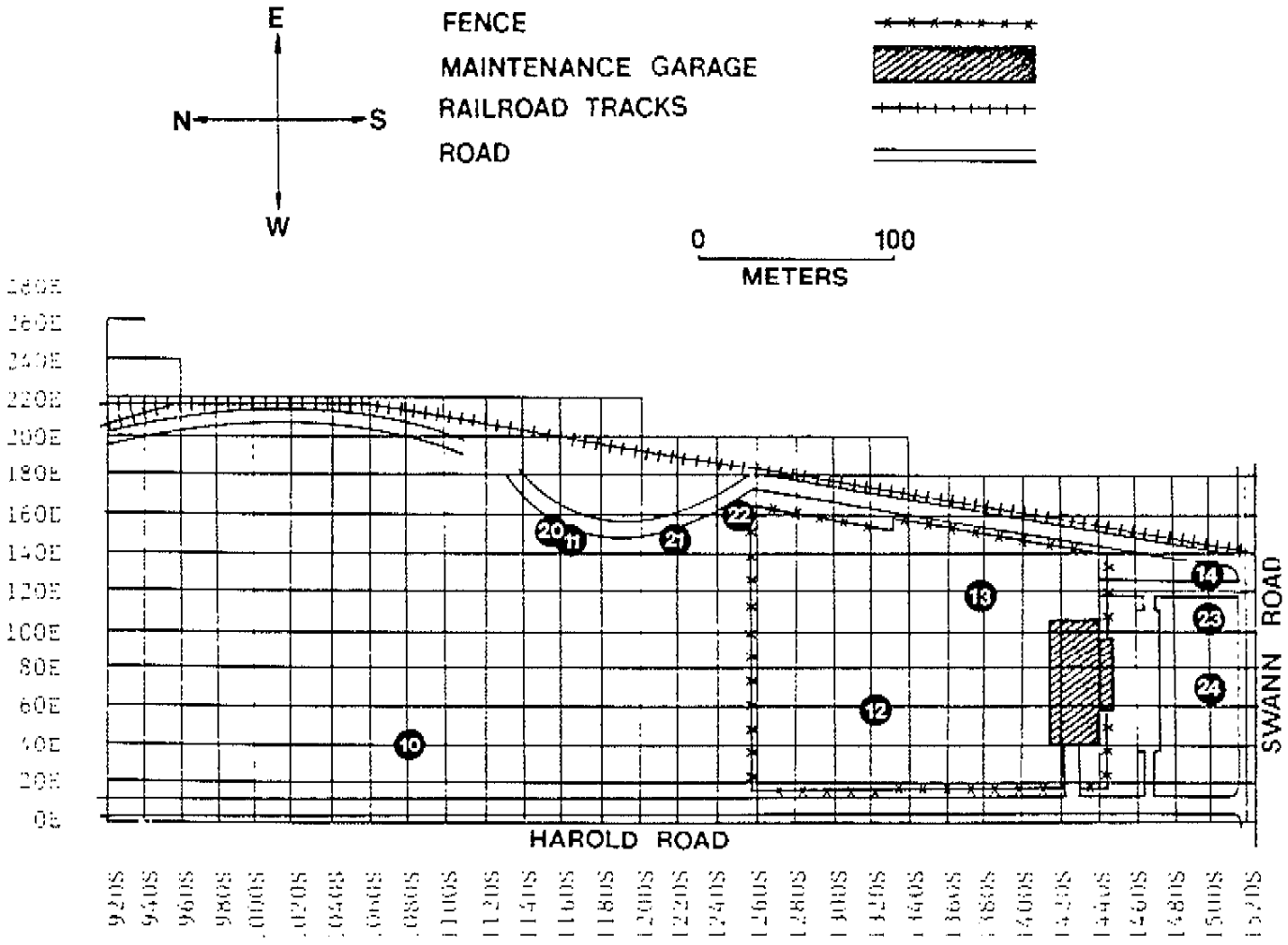

FIGURE 6. Borehole Locations on the Southern Portion of Property Q.

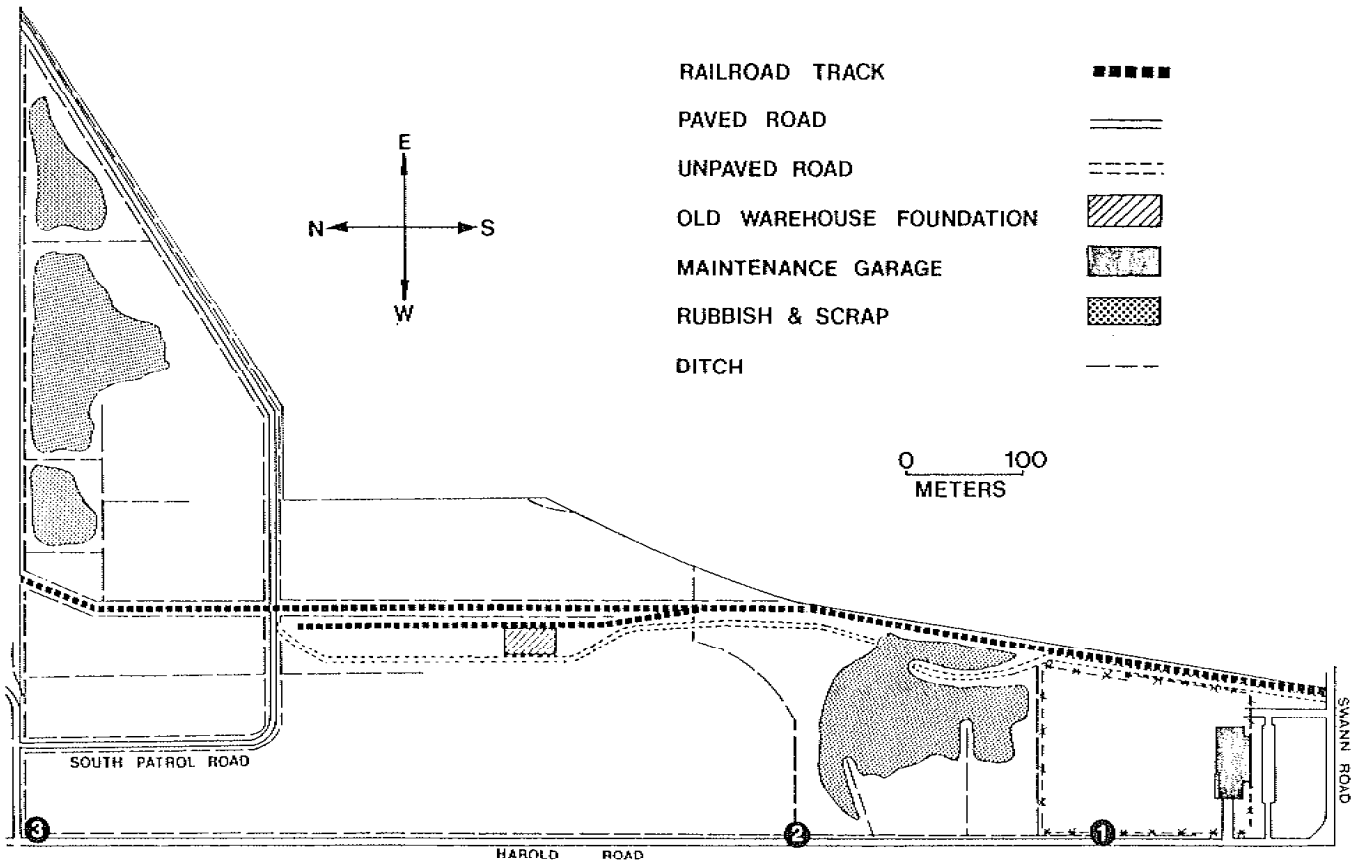

FIGURE 7. Locations of Surface Water Samples Collected on Property Q.

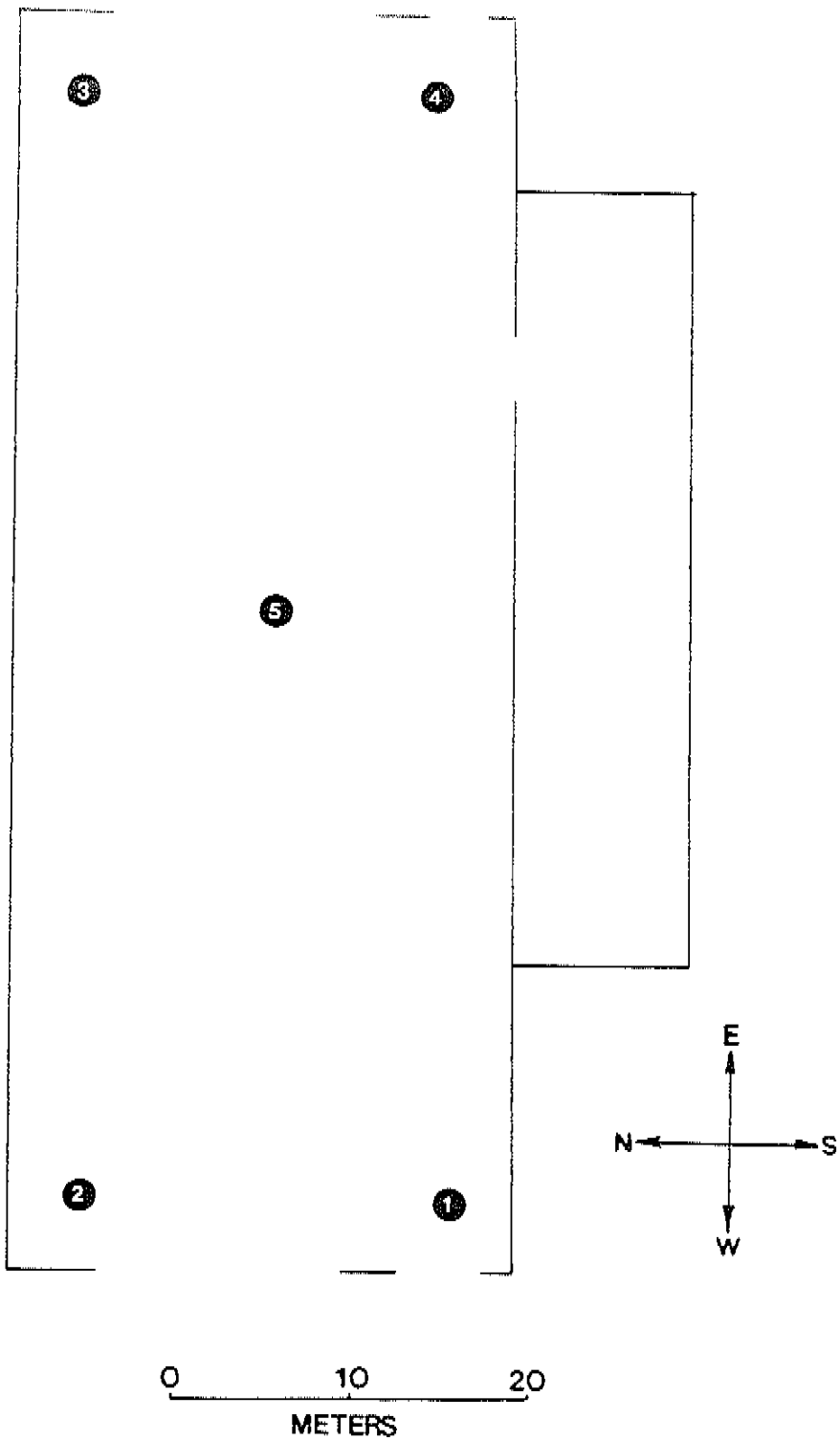

FIGURE 8. Locations of Direct Radiation Measurements in the Maintenance Building on Property Q.

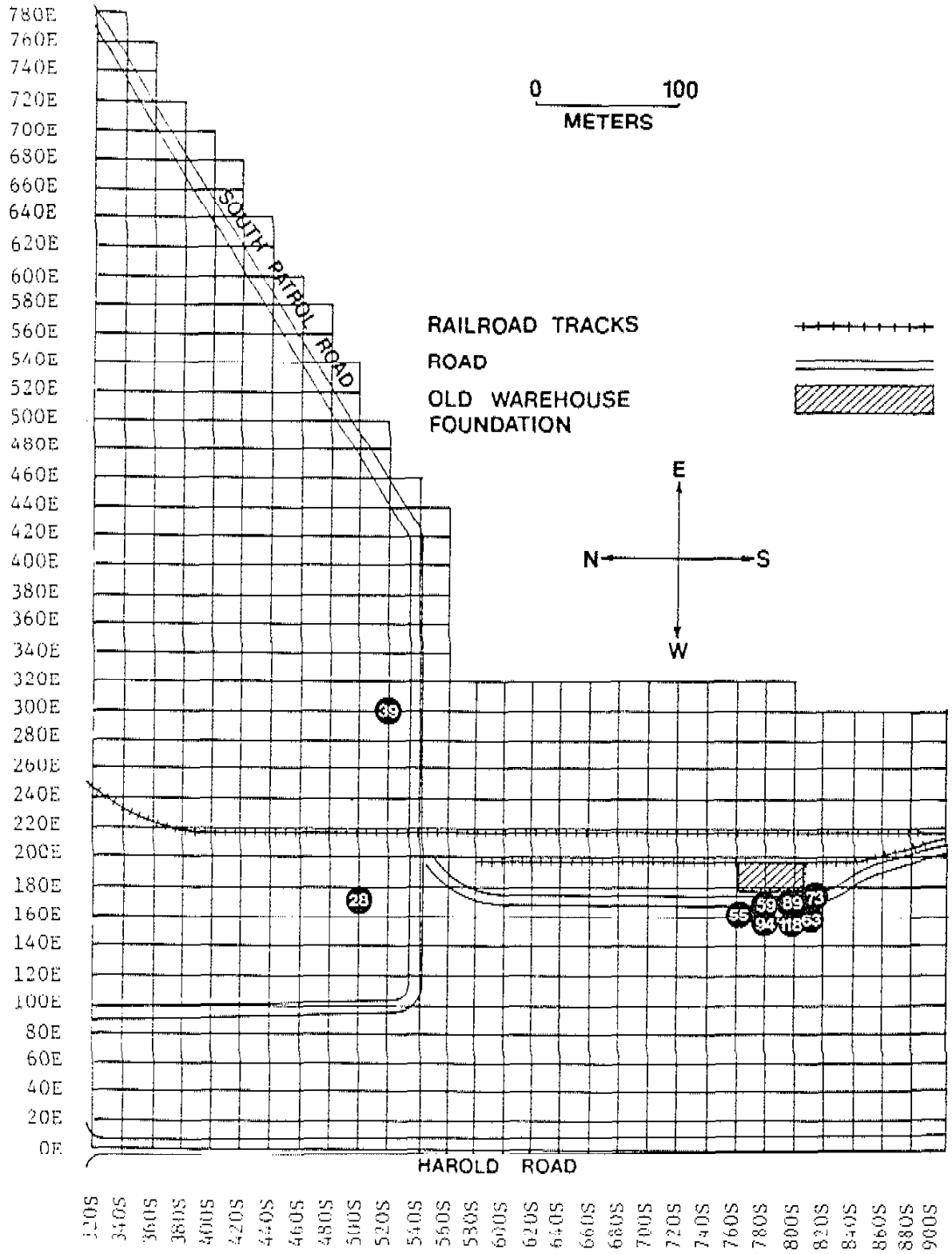

FIGURE 10. Locations and Levels (μR/h) of Elevated Contact Radiation on the Northern Portion of Property Q.

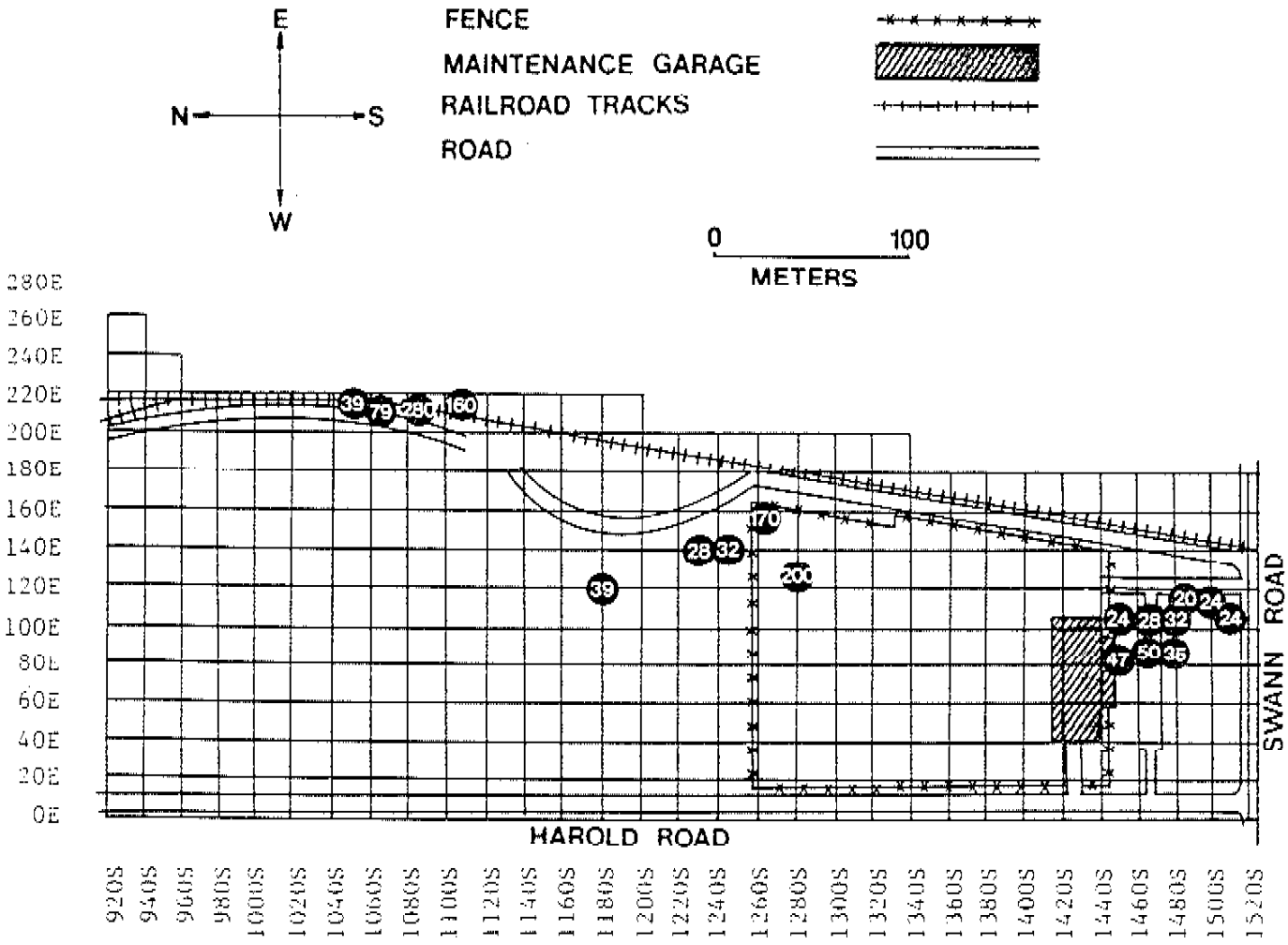

FIGURE 11. Locations and Levels (μR/h) of Elevated Contact Radiation on the Southern Portion of Property Q.

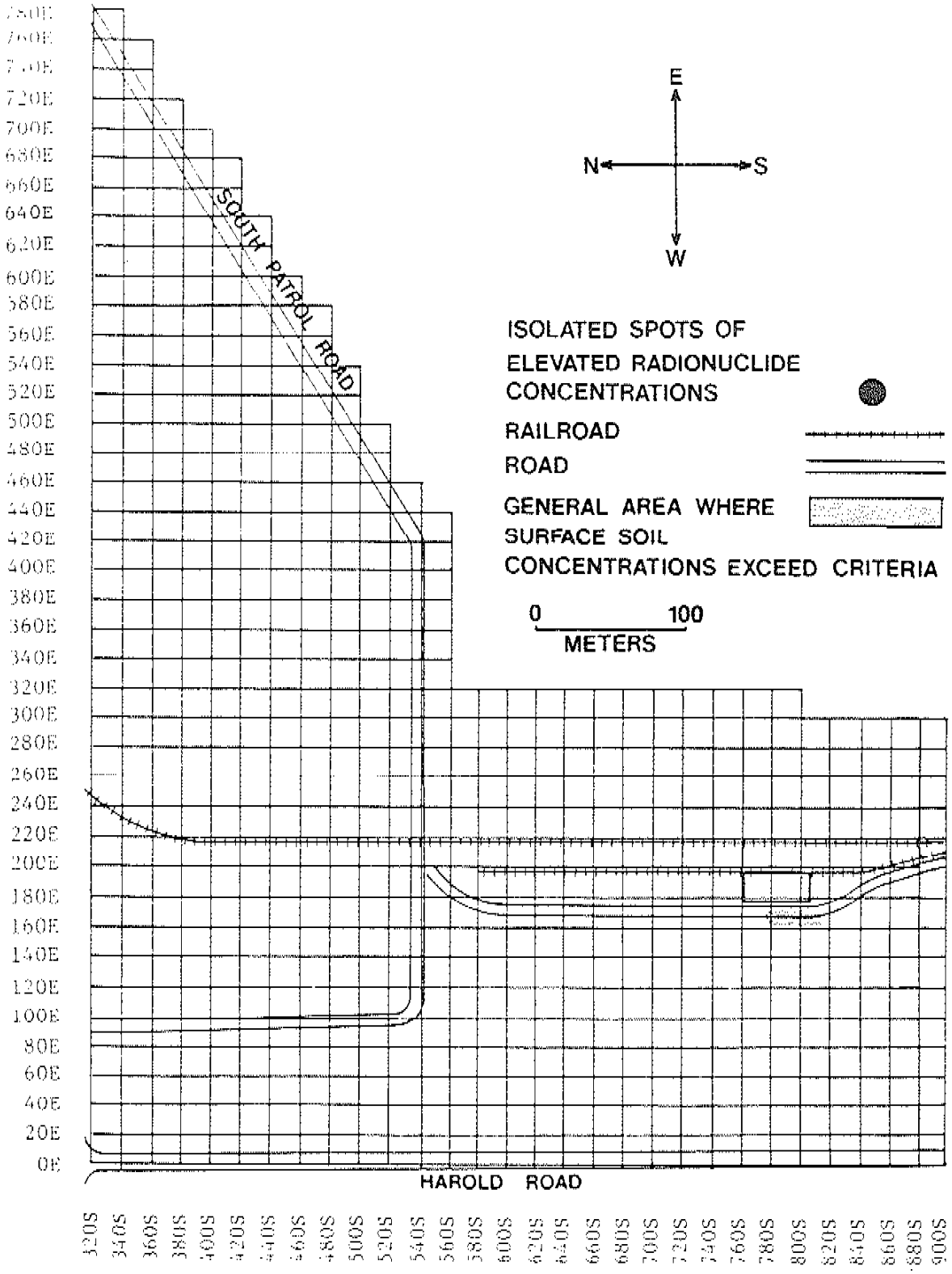

FIGURE 12. Map of NFSS Off-Site Property Q (Northern Portion) Indicating the Area Where Radionuclide Concentrations in Soil Exceed Criteria.

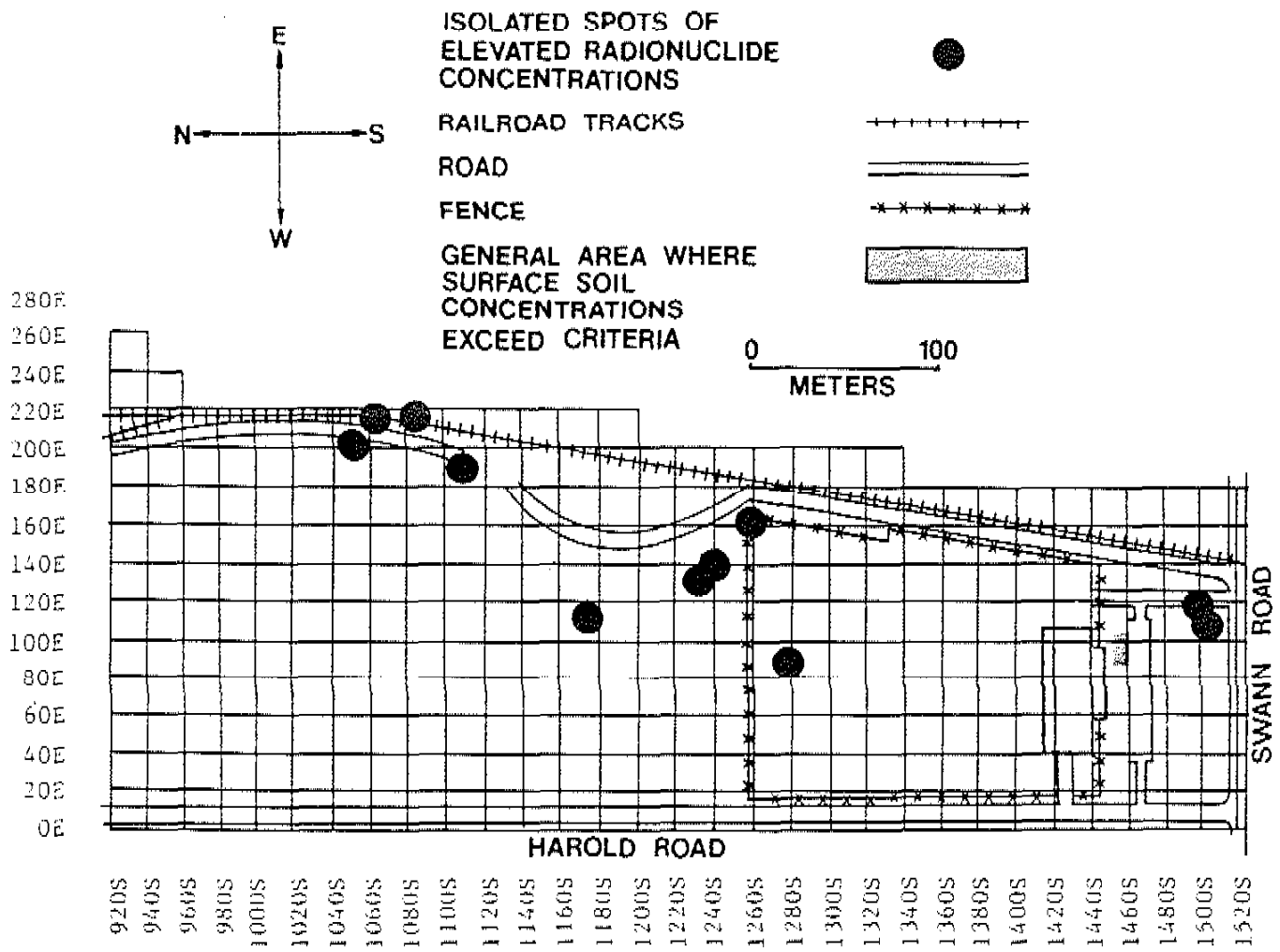

FIGURE 13. Map of NFSS Off-Site Property Q (Southern Portion) Indicating the Area Where Radionuclide Concentrations in Soil Exceed Criteria.

TABLE 2

DIRECT RADIATION LEVELS SYSTEMATICALLY MEASURED AT GRID LINE INTERSECTIONS

Grid Location	Gamma Exposure Rates at 1 m Above the Surface (μR/h)	Gamma Exposure Rates at the Surface (μR/h)	Beta-Gamma Dose Rates at the Surface (μrad/h)
320S, 0E	10	10	28
320S, 20E	11	11	31
320S, 40E	10	10	20
320S, 60E	10	10	29
320S, 80E	11	11	32
320S,100E	9.8	8.7	48
320S,120E	11	11	42
320S,140E	12	12	52
320S,160E	13	13	42
320S,180E	12	15	54
320S,200E	14	16	57
320S,220E	13	15	45
320S,240E	13	15	31
320S,260E	13	13	45
320S,280E	14	15	55
320S,300E	13	15	66
320S,320E	13	12	38
320S,340E	11	11	35
320S,360E	11	10	17
320S,380E	11	10	28
320S,400E	11	11	43
320S,420E	11	11	34
320S,440E	11	11	35
320S,460E	11	11	37
320S,480E	11	11	22
320S,500E	11	11	58
320S,520E	11	11	31
320S,540E	12	12	37
320S,560E	12	12	51
320S,580E	12	12	31
320S,600E	11	11	45
320S,620E	11	11	42
320S,640E	11	12	31
320S,660E	11	11	37
320S,680E	11	12	35
320S,700E	11	12	43
320S,720E	11	11	26
320S,740E	11	11	37
320S,760E	11	11	31
320S,780E	10	11	29

TABLE 2, cont.

DIRECT RADIATION LEVELS SYSTEMATICALLY MEASURED AT GRID LINE INTERSECTIONS

Grid Location	Gamma Exposure Rates at 1 m Above the Surface (μR/h)	Gamma Exposure Rates at the Surface (μR/h)	Beta-Gamma Dose Rates at the Surface (μrad/h)
340S, 0E	12	12	34
340S, 20E	11	12	48
340S, 40E	11	12	35
340S, 60E	12	12	49
340S, 80E	11	12	49
340S,100E	11	11	42
340S,120E	11	11	32
340S,140E	12	12	28
340S,160E	12	12	25
340S,180E	11	12	35
340S,200E	11	12	43
340S,220E	12	12	46
340S,240E	13	13	43
340S,260E	12	12	48
340S,280E	12	12	28
340S,300E	12	12	37
340S,320E	12	12	38
340S,340E	12	12	45
340S,360E	11	11	26
340S,380E	11	12	25
340S,400E	11	12	25
340S,420E	12	12	25
340S,440E	12	12	38
340S,460E	12	12	49
340S,480E	11	11	34
340S,500E	9.8	9.8	18
340S,520E	10	10	20
340S,540E	11	11	34
340S,560E	11	12	42
340S,580E	11	12	34
340S,600E	11	12	29
340S,620E	11	11	37
340S,640E	12	12	35
340S,660E	11	11	38
340S,680E	12	12	40
340S,700E	11	11	35
340S,720E	11	11	23
340S,740E	11	11	29
340S,760E	10	10	31
340S,780E	10	10	38

TABLE 2, cont.

DIRECT RADIATION LEVELS SYSTEMATICALLY MEASURED AT GRID LINE INTERSECTIONS

Grid Location	Gamma Exposure Rates at 1 m Above the Surface (μR/h)	Gamma Exposure Rates at the Surface (μR/h)	Beta-Gamma Dose Rates at the Surface (μrad/h)
360S, 0E	12	12	46
360S, 20E	12	12	35
360S, 40E	12	13	32
360S, 60E	12	12	22
360S, 80E	12	12	28
360S,100E	11	11	29
360S,120E	11	12	35
360S,140E	11	11	34
360S,160E	12	12	22
360S,180E	11	11	28
360S,200E	11	11	42
360S,220E	12	12	22
360S,240E	12	12	29
360S,260E	12	13	20
360S,280E	12	12	46
360S,300E	12	13	43
360S,320E	11	11	31
360S,340E	11	11	48
360S,360E	11	11	42
360S,380E	12	12	34
360S,400E	11	12	31
360S,420E	11	12	60
360S,440E	12	12	40
360S,460E	12	12	23
360S,480E	12	12	49
360S,500E	11	11	42
360S,520E	12	12	23
360S,540E	11	12	55
360S,560E	11	12	38
360S,580E	11	11	35
360S,600E	11	12	38
360S,620E	11	11	34
360S,640E	11	11	31
360S,660E	12	12	28
360S,680E	11	11	42
360S,700E	11	12	35
360S,720E	11	12	46
360S,740E	11	11	46
380S, 0E	10	10	35
380S, 20E	11	11	37

TABLE 2, cont.

DIRECT RADIATION LEVELS SYSTEMATICALLY MEASURED AT GRID LINE INTERSECTIONS

Grid Location	Gamma Exposure Rates at 1 m Above the Surface (μR/h)	Gamma Exposure Rates at the Surface (μR/h)	Beta-Gamma Dose Rates at the Surface (μrad/h)
380S, 40E	11	12	35
380S, 60E	11	12	34
380S, 80E	11	11	40
380S,100E	11	11	38
380S,120E	12	12	30
380S,140E	11	11	29
380S,160E	12	12	54
380S,180E	11	11	35
380S,200E	12	12	40
380S,220E	13	16	57
380S,240E	12	12	35
380S,260E	12	13	37
380S,280E	11	12	58
380S,300E	12	11	29
380S,320E	12	11	34
380S,340E	11	11	26
380S,360E	10	10	35
380S,380E	11	11	29
380S,400E	11	11	38
380S,420E	11	12	17
380S,440E	11	12	37
380S,460E	12	12	31
380S,480E	12	12	32
380S,500E	12	12	34
380S,520E	12	12	54
380S,540E	11	12	32
380S,560E	11	12	40
380S,580E	11	12	28
380S,600E	12	12	38
380S,620E	12	11	23
380S,640E	11	11	35
380S,660E	11	11	37
380S,680E	11	11	46
380S,700E	8.7	8.7	45
400S, 0E	10	8.7	28
400S, 20E	11	11	37
400S, 40E	11	12	31
400S, 60E	12	12	46
400S, 80E	11	12	28
400S,100E	12	12	46

TABLE 2, cont.

DIRECT RADIATION LEVELS SYSTEMATICALLY MEASURED AT GRID LINE INTERSECTIONS

Grid Location	Gamma Exposure Rates at 1 m Above the Surface (μR/h)	Gamma Exposure Rates at the Surface (μR/h)	Beta-Gamma Dose Rates at the Surface (μrad/h)
400S,120E	12	12	49
400S,140E	11	11	46
400S,160E	12	12	37
400S,180E	12	12	42
400S,200E	11	12	57
400S,220E	12	12	42
400S,240E	11	11	29
400S,260E	12	12	32
400S,280E	12	12	32
400S,300E	12	12	35
400S,320E	12	12	38
400S,340E	11	11	40
400S,360E	12	12	34
400S,380E	12	12	38
400S,400E	12	12	34
400S,420E	12	12	42
400S,440E	11	12	29
400S,460E	11	12	29
400S,480E	12	11	46
400S,500E	12	12	38
400S,520E	12	12	28
400S,540E	11	12	32
400S,560E	11	11	37
400S,580E	11	11	29
400S,600E	12	12	40
400S,620E	10	10	37
400S,640E	11	11	29
400S,660E	11	12	35
400S,680E	11	11	37
420S, 0E	9.8	9.8	29
420S, 20E	11	11	45
420S, 40E	11	11	46
420S, 60E	11	11	23
420S, 80E	11	10	43
420S,100E	12	12	51
420S,120E	11	11	46
420S,140E	12	12	43
420S,160E	12	12	54
420S,180E	12	12	37
420S,200E	12	12	35

TABLE 2, cont.

DIRECT RADIATION LEVELS SYSTEMATICALLY MEASURED AT GRID LINE INTERSECTIONS

Grid Location	Gamma Exposure Rates at 1 m Above the Surface (μR/h)	Gamma Exposure Rates at the Surface (μR/h)	Beta-Gamma Dose Rates at the Surface (μrad/h)
420S,220E	12	12	40
420S,240E	11	11	34
420S,260E	11	12	43
420S,280E	12	12	22
420S,300E	11	11	34
420S,320E	11	12	43
420S,340E	12	12	38
420S,360E	11	12	35
420S,380E	11	12	45
420S,400E	11	12	38
420S,420E	12	12	45
420S,440E	12	12	48
420S,460E	12	12	31
420S,480E	11	11	34
420S,500E	11	11	51
420S,520E	11	12	43
420S,540E	12	12	43
420S,560E	11	11	32
420S,580E	11	11	31
420S,600E	11	11	29
420S,620E	11	11	32
420S,640E	11	11	25
440S, 0E	9.5	8.7	28
440S, 20E	11	12	46
440S, 40E	11	12	35
440S, 60E	11	11	46
440S, 80E	11	11	38
440S,100E	11	11	41
440S,120E	11	11	35
440S,140E	12	12	34
440S,160E	12	12	42
440S,180E	12	12	34
440S,200E	12	12	37
440S,220E	12	12	45
440S,240E	12	12	45
440S,260E	11	11	42
440S,280E	11	11	43
440S,300E	11	11	46
440S,320E	12	12	37
440S,340E	11	12	38

TABLE 2, cont.

DIRECT RADIATION LEVELS SYSTEMATICALLY MEASURED AT GRID LINE INTERSECTIONS

Grid Location	Gamma Exposure Rates at 1 m Above the Surface (μR/h)	Gamma Exposure Rates at the Surface (μR/h)	Beta-Gamma Dose Rates at the Surface (μrad/h)
440S,360E	11	12	45
440S,380E	11	11	40
440S,400E	12	12	45
440S,420E	12	12	32
440S,440E	11	11	34
440S,460E	11	11	45
440S,480E	11	11	29
440S,500E	11	11	43
440S,520E	11	11	28
440S,540E	11	12	32
440S,560E	12	12	25
440S,580E	11	11	34
440S,600E	9.8	8.0	37
440S,620E	11	11	46
460S, 0E	10	9.8	35
460S, 20E	11	12	43
460S, 40E	11	11	49
460S, 60E	11	11	32
460S, 80E	11	11	42
460S,100E	11	11	58
460S,120E	11	11	34
460S,140E	12	12	51
460S,160E	12	12	31
460S,180E	11	11	31
460S,200E	11	12	31
460S,220E	12	12	40
460S,240E	11	11	37
460S,260E	12	12	25
460S,280E	11	11	34
460S,300E	10	11	34
460S,320E	11	12	35
460S,340E	12	12	35
460S,360E	11	12	17
460S,380E	11	12	31
460S,400E	11	12	29
460S,420E	11	12	31
460S,440E	11	12	31
460S,460E	11	11	38
460S,480E	12	12	40
460S,500E	11	11	42

TABLE 2, cont.

DIRECT RADIATION LEVELS SYSTEMATICALLY MEASURED AT GRID LINE INTERSECTIONS

Grid Location	Gamma Exposure Rates at 1 m Above the Surface (μR/h)	Gamma Exposure Rates at the Surface (μR/h)	Beta-Gamma Dose Rates at the Surface (μrad/h)
460S,520E	11	11	38
460S,540E	10	11	40
460S,560E	11	11	32
480S, 0E	10	8.7	45
480S, 20E	11	11	35
480S, 40E	11	12	37
480S, 60E	11	11	42
480S, 80E	12	12	29
480S,100E	11	11	23
480S,120E	12	11	48
480S,140E	11	11	31
480S,160E	12	12	40
480S,180E	12	12	38
480S,200E	12	12	38
480S,220E	13	13	31
480S,240E	11	12	17
480S,260E	11	11	52
480S,280E	11	11	37
480S,300E	11	11	45
480S,320E	11	12	31
480S,340E	11	11	35
480S,360E	12	12	28
480S,380E	11	11	55
480S,400E	11	12	38
480S,420E	11	11	45
480S,440E	11	11	43
480S,460E	11	11	29
480S,480E	10	10	20
480S,500E	11	11	43
480S,520E	11	11	26
500S, 0E	9.8	9.8	23
500S, 20E	11	11	45
500S, 40E	11	11	18
500S, 60E	11	11	38
500S, 80E	12	12	32
500S,100E	11	11	40
500S,120E	11	11	35
500S,140E	12	12	34
500S,160E	11	12	26

TABLE 2, cont.

DIRECT RADIATION LEVELS SYSTEMATICALLY MEASURED AT GRID LINE INTERSECTIONS

Grid Location	Gamma Exposure Rates at 1 m Above the Surface (μR/h)	Gamma Exposure Rates at the Surface (μR/h)	Beta-Gamma Dose Rates at the Surface (μrad/h)
500S,180E	11	12	38
500S,200E	11	11	45
500S,220E	12	12	46
500S,240E	12	11	18
500S,260E	10	11	38
500S,280E	11	11	32
500S,300E	11	11	48
500S,320E	12	12	32
500S,340E	11	11	26
500S,360E	12	12	46
500S,380E	12	12	23
500S,400E	12	12	34
500S,420E	11	11	34
500S,440E	11	11	34
500S,460E	11	11	25
500S,480E	11	11	42
520S, 0E	8.7	8.4	23
520S, 20E	11	11	49
520S, 40E	11	11	46
520S, 60E	11	11	28
520S, 80E	11	11	31
520S,100E	11	11	45
520S,120E	11	12	51
520S,140E	11	11	40
520S,160E	11	13	45
520S,180E	11	11	35
520S,200E	12	13	42
520S,220E	13	13	48
520S,240E	11	12	45
520S,260E	11	11	35
520S,280E	11	12	46
520S,300E	22	22	40
520S,320E	12	12	37
520S,340E	11	12	28
520S,360E	12	12	49
520S,380E	11	12	45
520S,400E	11	11	28
520S,420E	11	10	25
520S,440E	11	11	45
520S,460E	11	12	49

TABLE 2, cont.

DIRECT RADIATION LEVELS SYSTEMATICALLY MEASURED AT GRID LINE INTERSECTIONS

Grid Location	Gamma Exposure Rates at 1 m Above the Surface (μR/h)	Gamma Exposure Rates at the Surface (μR/h)	Beta-Gamma Dose Rates at the Surface (μrad/h)
540S, 0E	9.5	8.4	32
540S, 20E	11	12	34
540S, 40E	11	11	37
540S, 60E	11	11	38
540S, 80E	10	10	31
540S,100E	11	11	38
540S,120E	11	11	38
540S,140E	11	11	26
540S,160E	11	12	32
540S,180E	11	12	49
540S,200E	12	11	35
540S,220E	12	12	42
540S,240E	11	11	45
540S,260E	11	11	34
540S,280E	11	11	45
540S,300E	11	12	30
540S,320E	12	12	35
540S,340E	11	11	26
540S,360E	11	11	34
540S,380E	11	12	26
540S,400E	11	11	23
540S,420E	11	11	32
540S,440E	10	9.8	25
540S,460E	10	11	42
560S, 0E	9.8	9.5	32
560S, 20E	11	11	32
560S, 40E	11	12	48
560S, 60E	10	10	25
560S, 80E	11	10	37
560S,100E	11	11	29
560S,120E	10	11	32
560S,140E	11	11	49
560S,160E	11	12	46
560S,180E	11	11	37
560S,200E	10	10	29
560S,220E	12	14	42
560S,240E	11	11	34
560S,260E	11	11	45
560S,280E	11	11	42

TABLE 2, cont.

DIRECT RADIATION LEVELS SYSTEMATICALLY MEASURED AT GRID LINE INTERSECTIONS

Grid Location	Gamma Exposure Rates at 1 m Above the Surface (μR/h)	Gamma Exposure Rates at the Surface (μR/h)	Beta-Gamma Dose Rates at the Surface (μrad/h)
560S,300E	11	12	35
560S,320E	11	11	49
560S,340E	11	11	52
560S,360E	12	12	46
560S,380E	11	11	35
560S,400E	11	11	45
560S,420E	11	11	26
580S, 0E	9.8	8.7	25
580S, 20E	11	11	49
580S, 40E	10	11	34
580S, 60E	12	12	22
580S, 80E	11	12	40
580S,100E	11	11	28
580S,120E	11	11	31
580S,140E	11	11	37
580S,160E	11	12	48
580S,180E	11	11	45
580S,200E	11	11	32
580S,220E	14	13	34
580S,240E	11	12	40
580S,260E	11	11	43
580S,280E	11	12	40
580S,300E	11	12	26
580S,320E	11	11	34
600S, 0E	8.0	8.7	31
600S, 20E	10	11	28
600S, 40E	11	11	38
600S, 60E	10	11	32
600S, 80E	11	11	38
600S,100E	11	11	28
600S,120E	12	11	32
600S,140E	11	11	42
600S,160E	11	12	37
600S,180E	11	11	34
600S,200E	12	11	45
600S,220E	13	12	54
600S,240S	11	12	32
600S,260S	11	11	37
600S,280S	11	12	34

TABLE 2, cont.

DIRECT RADIATION LEVELS SYSTEMATICALLY MEASURED AT GRID LINE INTERSECTIONS

Grid Location	Gamma Exposure Rates at 1 m Above the Surface (μR/h)	Gamma Exposure Rates at the Surface (μR/h)	Beta-Gamma Dose Rates at the Surface (μrad/h)
600S,300S	11	12	40
600S,320S	11	11	55
620S, 0E	9.8	8.7	31
620S, 20E	11	11	25
620S, 40E	11	11	22
620S, 60E	11	11	29
620S, 80E	11	11	32
620S,100E	11	11	26
620S,120E	11	11	35
620S,140E	12	12	28
620S,160E	12	12	38
620S,200E	12	12	31
620S,220E	14	13	45
620S,240E	11	11	51
620S,260E	11	11	34
620S,280E	11	11	43
620S,300E	12	12	49
620S,320E	12	12	42
640S, 0E	10	10	52
640S, 20E	10	11	28
640S, 40E	11	11	31
640S, 60E	11	11	37
640S, 80E	11	11	48
640S,100E	11	11	29
640S,120E	11	12	34
640S,140E	11	11	37
640S,160E	12	11	28
640S,180E	11	11	34
640S,200E	12	12	32
640S,220E	12	12	37
640S,240E	11	11	31
640S,260E	11	11	42
640S,280E	11	11	38
640S,300E	12	12	48
640S,320E	12	12	40
660S, 0E	10	11	42
660S, 20E	10	10	46
660S, 40E	11	11	31

TABLE 2, cont.

DIRECT RADIATION LEVELS SYSTEMATICALLY MEASURED AT GRID LINE INTERSECTIONS

Grid Location	Gamma Exposure Rates at 1 m Above the Surface (μR/h)	Gamma Exposure Rates at the Surface (μR/h)	Beta-Gamma Dose Rates at the Surface (μrad/h)
660S, 60E	10	11	34
660S, 80E	11	11	38
660S,100E	11	11	29
660S,120E	11	11	35
660S,140E	11	11	31
660S,160E	11	12	49
660S,180E	11	12	40
660S,200E	12	12	32
660S,220E	11	11	26
660S,240E	11	11	29
660S,260E	11	11	34
660S,280E	11	11	38
660S,300E	11	11	31
660S,320E	11	11	35
680S, 0E	10	10	32
680S, 20E	11	11	29
680S, 40E	11	11	35
680S, 60E	11	11	37
680S, 80E	11	11	35
680S,100E	11	11	40
680S,120E	11	11	40
680S,140E	10	11	32
680S,160E	11	11	37
680S,180E	11	11	34
680S,200E	11	11	37
680S,220E	12	12	32
680S,240E	12	12	37
680S,260E	11	12	31
680S,280E	11	11	35
680S,300E	11	11	43
680S,320E	11	11	29
700S, 0E	8.7	8.7	22
700S, 20E	11	11	28
700S, 40E	11	10	25
700S, 60E	11	11	35
700S, 80E	11	11	32
700S,100E	11	11	38
700S,120E	11	11	32
700S,140E	11	11	40

TABLE 2, cont.

DIRECT RADIATION LEVELS SYSTEMATICALLY
MEASURED AT GRID LINE INTERSECTIONS

Grid Location	Gamma Exposure Rates at 1 m Above the Surface (μR/h)	Gamma Exposure Rates at the Surface (μR/h)	Beta-Gamma Dose Rates at the Surface (μrad/h)
700S,160E	11	11	34
700S,180E	11	11	31
700S,200E	12	12	43
700S,220E	13	13	52
700S,240E	12	12	42
700S,260E	12	12	35
700S,280E	11	11	29
700S,300E	11	11	32
700S,320E	11	11	28
720S, 0E	9.9	10	40
720S, 20E	8.4	9.8	38
720S, 40E	10	11	32
720S, 60E	11	11	46
720S, 80E	11	11	37
720S,100E	11	11	42
720S,120E	11	11	31
720S,140E	10	11	32
720S,160E	11	11	29
720S,180E	12	11	42
720S,200E	12	12	31
720S,220E	12	12	32
720S,240E	11	11	31
720S,260E	11	11	40
720S,280E	11	11	37
720S,300E	11	11	32
720S,320E	11	11	28
740S, 0E	8.0	8.4	42
740S, 20E	11	11	29
740S, 40E	11	11	32
740S, 60E	12	12	38
740S, 80E	13	13	49
740S,100E	13	13	42
740S,120E	13	15	43
740S,140E	11	12	35
740S,160E	11	11	31
740S,180E	11	11	35
740S,200E	11	11	37
740S,220E	12	12	48
740S,240E	12	12	40

TABLE 2, cont.

DIRECT RADIATION LEVELS SYSTEMATICALLY
MEASURED AT GRID LINE INTERSECTIONS

Grid Location	Gamma Exposure Rates at 1 m Above the Surface (μR/h)	Gamma Exposure Rates at the Surface (μR/h)	Beta-Gamma Dose Rates at the Surface (μrad/h)
740S,260E	11	11	34
740S,280E	11	11	31
740S,300E	11	11	28
740S,320E	11	11	35
760S, 0E	10	11	31
760S, 20E	11	11	34
760S, 40E	11	11	34
760S, 60E	11	11	34
760S, 80E	11	11	31
760S,100E	11	11	32
760S,120E	11	11	28
760S,140E	11	11	31
760S,160E	11	11	35
760S,180E	11	11	40
760S,200E	12	12	46
760S,220E	12	13	42
760S,240E	10	10	43
760S,260E	11	11	37
760S,280E	11	11	35
760S,300E	10	10	28
760S,320E	11	11	31
780S, 0E	10	11	28
780S, 20E	12	11	23
780S, 40E	11	11	23
780S, 60E	10	12	42
780S, 80E	11	11	54
780S,100E	11	11	37
780S,120E	11	12	35
780S,140E	11	12	35
780S,160E	11	11	28
780S,180E	11	12	26
780S,200E	13	17	46
780S,220E	12	13	32
780S,240E	11	11	46
780S,260E	11	11	45
780S,280E	11	12	35
780S,300E,	12	11	37

TABLE 2, cont.

DIRECT RADIATION LEVELS SYSTEMATICALLY MEASURED AT GRID LINE INTERSECTIONS

Grid Location	Gamma Exposure Rates at 1 m Above the Surface (μR/h)	Gamma Exposure Rates at the Surface (μR/h)	Beta-Gamma Dose Rates at the Surface (μrad/h)
800S, 0E	9.8	9.8	32
800S, 20E	11	11	26
800S, 40E	11	11	34
800S, 60E	11	12	35
800S, 80E	11	11	35
800S,100E	11	11	31
800S,120E	11	12	28
800S,140E	11	11	34
800S,160E	11	11	31
800S,180E	12	11	32
800S,200E	14	15	63
800S,220E	14	15	55
800S,240E	11	12	42
800S,260E	11	11	34
800S,280E	10	11	32
800S,300E	11	12	46
820S, 0E	10	11	32
820S, 20E	11	11	40
820S, 40E	11	11	35
820S, 60E	11	11	45
820S, 80E	11	11	35
820S,100E	11	11	38
820S,120E	11	11	34
820S,140E	11	12	46
820S,160E	11	10	35
820S,180E	11	11	23
820S,200E	14	16	51
820S,220E	13	14	60
820S,240E	11	11	34
820S,260E	11	12	54
820S,280E	11	12	54
820S,300E	11	11	40
840S, 0E	9.8	10	26
840S, 20E	11	11	29
840S, 40E	11	11	26
840S, 60E	11	11	34
840S, 80E	11	11	26
840S,100E	11	11	32
840S,120E	11	11	28

TABLE 2, cont.

DIRECT RADIATION LEVELS SYSTEMATICALLY MEASURED AT GRID LINE INTERSECTIONS

Grid Location	Gamma Exposure Rates at 1 m Above the Surface (μR/h)	Gamma Exposure Rates at the Surface (μR/h)	Beta-Gamma Dose Rates at the Surface (μrad/h)
840S,140E	11	12	57
840S,160E	11	11	40
840S,180E	11	11	42
840S,200E	15	16	51
840S,220E	13	13	65
840S,240E	11	11	35
840S,260E	10	11	45
840S,280E	11	11	42
840S,300E	11	11	34
860S, 0E	10	11	26
860S, 20E	11	11	43
860S, 40E	11	11	48
860S, 60E	11	11	38
860S, 80E	11	11	37
860S,100E	11	11	28
860S,120E	11	11	34
860S,140E	11	12	32
860S,160E	11	12	15
860S,180E	11	11	42
860S,200E	11	10	18
860S,220E	13	13	38
860S,240E	11	12	51
860S,260E	11	11	56
860S,280E	11	11	38
860S,300E	11	11	26
880S, 0E	9.9	11	40
880S, 20E	11	11	43
880S, 40E	11	11	48
880S, 60E	11	11	38
880S, 80E	11	11	37
880S,100E	11	11	28
880S,120E	11	11	34
880S,140E	11	12	32
880S,160E	11	12	15
880S,180E	12	12	42
880S,200E	11	11	18
880S,220E	13	13	38
880S,240E	11	12	51
880S,260E	11	11	57

TABLE 2, cont.

DIRECT RADIATION LEVELS SYSTEMATICALLY MEASURED AT GRID LINE INTERSECTIONS

Grid Location	Gamma Exposure Rates at 1 m Above the Surface (μR/h)	Gamma Exposure Rates at the Surface (μR/h)	Beta-Gamma Dose Rates at the Surface (μrad/h)
880S,280E	11	11	38
880S,300E	11	11	26
900S, 0E	11	11	38
900S, 20E	11	11	32
900S, 40E	11	11	45
900S, 60E	11	11	22
900S, 80E	11	11	42
900S,100E	11	11	37
900S,120E	11	11	28
900S,140E	11	12	32
900S,160E	11	11	28
900S,180E	11	12	31
900S,200E	11	11	45
900S,220E	13	13	60
900S,240E	11	11	48
900S,260E	11	11	29
900S,280E	11	11	60
900S,300E	11	11	34
920S, 0E	11	11	42
920S, 20E	11	11	21
920S, 40E	10	10	23
920S, 60E	11	11	34
920S, 80E	11	11	40
920S,100E	11	12	46
920S,120E	11	11	28
920S,140E	11	11	35
920S,160E	11	11	34
920S,180E	11	11	25
920S,200E	11	11	43
920S,220E	14	14	34
920S,240E	11	11	38
920S,260E	10	11	49
920S,280E	10	11	42
940S, 0E	10	11	29
940S, 20E	11	11	43
940S, 40E	11	11	51
940S, 60E	11	11	35
940S, 80E	11	11	18

TABLE 2, cont.

DIRECT RADIATION LEVELS SYSTEMATICALLY
MEASURED AT GRID LINE INTERSECTIONS

Grid Location	Gamma Exposure Rates at 1 m Above the Surface (μR/h)	Gamma Exposure Rates at the Surface (μR/h)	Beta-Gamma Dose Rates at the Surface (μrad/h)
940S,100E	12	12	37
940S,120E	11	11	32
940S,140E	11	11	46
940S,160E	11	12	29
940S,180E	11	12	38
940S,200E	11	12	35
940S,220E	13	15	60
940S,240E	11	11	37
940S,260E	12	12	45
960S, 0E	9.8	8.7	20
960S, 20E	11	11	48
960S, 40E	11	11	45
960S, 60E	11	11	49
960S, 80E	11	12	48
960S,100E	11	11	35
960S,120E	11	11	29
960S,140E	11	11	29
960S,160E	11	11	28
960S,180E	11	12	29
960S,200E	11	11	31
960S,220E	14	17	75
960S,240E	11	11	45
960S,260E	11	12	28
980S, 0E	8.7	8.4	20
980S, 20E	11	12	40
980S, 40E	11	12	35
980S, 60E	11	12	42
980S, 80E	11	12	23
980S,100E	11	11	37
980S,120E	11	11	49
980S,140E	11	11	48
980S,160E	11	12	38
980S,180E	12	12	62
980S,200E	12	13	40
980S,220E	12	13	46
1000S, 0E	8.7	8.0	28
1000S, 20E	11	11	38
1000S, 40E	11	11	43

TABLE 2, cont.

DIRECT RADIATION LEVELS SYSTEMATICALLY MEASURED AT GRID LINE INTERSECTIONS

Grid Location	Gamma Exposure Rates at 1 m Above the Surface (μR/h)	Gamma Exposure Rates at the Surface (μR/h)	Beta-Gamma Dose Rates at the Surface (μrad/h)
1000S, 60E	11	11	49
1000S, 80E	11	11	37
1000S,100E	11	11	34
1000S,120E	11	11	34
1000S,140E	11	11	52
1000S,160E	11	11	22
1000S,180E	12	13	46
1000S,200E	11	11	37
1020S, 0E	8.7	8.0	37
1020S, 20E	11	12	34
1020S, 40E	11	11	48
1020S, 60E	12	12	54
1020S, 80E	11	11	23
1020S,100E	11	11	38
1020S,120E	11	11	35
1020S,140E	11	12	15
1020S,160E	12	12	51
1020S,180E	11	11	37
1020S,200E	11	12	34
1040S, 0E	9.8	8.0	38
1040S, 20E	11	11	35
1040S, 40E	10	11	31
1040S, 60E	11	11	29
1040S, 80E	11	12	32
1040S,100E	11	11	37
1040S,120E	11	11	38
1040S,140E	12	12	32
1040S,160E	12	11	31
1040S,180E	11	11	49
1040S,200E	11	12	31
1060S, 0E	9.9	8.7	31
1060S, 20E	10	11	52
1060S, 40E	11	11	20
1060S, 60E	11	12	42
1060S, 80E	10	10	32
1060S,100E	10	9.9	37
1060S,120E	11	12	38
1060S,140E	11	11	32

TABLE 2, cont.

DIRECT RADIATION LEVELS SYSTEMATICALLY MEASURED AT GRID LINE INTERSECTIONS

Grid Location	Gamma Exposure Rates at 1 m Above the Surface (μR/h)	Gamma Exposure Rates at the Surface (μR/h)	Beta-Gamma Dose Rates at the Surface (μrad/h)
1060S,160E	11	12	54
1060S,180E	12	13	46
1060S,200E	12	11	42
1080S, 0E	9.5	9.5	43
1080S, 20E	11	11	52
1080S, 40E	11	11	42
1080S, 60E	12	11	51
1080S, 80E	12	12	35
1080S,100E	11	11	23
1080S,120E	11	12	46
1080S,140E	12	11	37
1080S,160E	12	12	43
1080S,180E	12	12	55
1080S,200E	11	11	38
1100S, 0E	9.8	8.4	37
1100S, 20E	10	10	48
1100S, 40E	11	11	40
1100S, 60E	10	11	54
1100S, 80E	10	11	48
1100S,100E	11	11	54
1100S,120E	11	11	68
1100S,140E	11	11	40
1100S,160E	11	12	48
1100S,180E	11	12	38
1100S,200E	12	12	52
1120S, 0E	8.1	8.0	28
1120S, 20E	11	12	32
1120S, 40E	11	11	45
1120S, 60E	11	11	37
1120S, 80E	11	11	37
1120S,100E	11	11	32
1120S,120E	11	11	38
1120S,140E	11	11	38
1120S,160E	10	11	38
1120S,180E	11	11	54
1120S,200E	12	13	42

TABLE 2, cont.

DIRECT RADIATION LEVELS SYSTEMATICALLY MEASURED AT GRID LINE INTERSECTIONS

Grid Location	Gamma Exposure Rates at 1 m Above the Surface (μR/h)	Gamma Exposure Rates at the Surface (μR/h)	Beta-Gamma Dose Rates at the Surface (μrad/h)
1140S, 0E	8.4	8.4	31
1140S, 20E	11	11	34
1140S, 40E	11	11	23
1140S, 60E	11	11	37
1140S, 80E	10	11	38
1140S,100E	11	11	31
1140S,120E	10	11	23
1140S,140E	11	11	46
1140S,160E	9.8	9.8	37
1140S,180E	10	11	40
1160S, 0E	9.8	8.0	23
1160S, 20E	11	11	35
1160S, 40E	11	11	29
1160S, 60E	11	11	43
1160S, 80E	11	11	42
1160S,100E	11	11	38
1160S,120E	10	11	48
1160S,140E	10	10	40
1160S,160E	10	10	31
1160S,180E	11	11	32
1180S, 0E	9.5	8.1	25
1180S, 20E	10	11	37
1180S, 40E	11	11	31
1180S, 60E	11	11	34
1180S, 80E	11	11	42
1180S,100E	11	11	35
1180S,120E	11	11	34
1180S,140E	12	12	43
1180S,160E	10	10	26
1200S, 0E	9.8	8.1	26
1200S, 20E	12	12	45
1200S, 40E	11	11	37
1200S, 60E	10	11	31
1200S, 80E	11	11	34
1200S,100E	9.9	9.9	46
1200S,120E	11	11	32
1200S,140E	11	11	35
1200S,160E	9.5	9.8	34

TABLE 2, cont.

DIRECT RADIATION LEVELS SYSTEMATICALLY MEASURED AT GRID LINE INTERSECTIONS

Grid Location	Gamma Exposure Rates at 1 m Above the Surface (μR/h)	Gamma Exposure Rates at the Surface (μR/h)	Beta-Gamma Dose Rates at the Surface (μrad/h)
1220S, 0E	9.5	9.5	38
1220S, 20E	9.8	9.5	37
1220S, 40E	9.8	9.8	29
1220S, 60E	11	11	46
1220S, 80E	10	11	37
1220S,100E	10	10	32
1220S,120E	11	11	48
1220S,140E	10	10	28
1220S,160E	8.4	7.0	38
1240S, 0E	9.9	8.4	25
1240S, 20E	9.8	10	35
1240S, 40E	11	11	29
1240S, 60E	10	10	28
1240S, 80E	10	11	49
1240S,100E	10	10	31
1240S,120E	10	10	40
1240S,140E	11	11	34
1240S,160E	10	10	46
1260S, 0E	10	9.9	25
1260S, 20E	11	10	69
1260S, 40E	11	11	35
1260S, 60E	11	11	28
1260S, 80E	6.4	6.7	28
1260S,100E	9.8	9.5	20
1260S,120E	10	11	55
1260S,140E	11	12	69
1260S,160E	10	11	48
1260S,180E	10	10	38
1280S, 0E	8.7	8.4	29
1280S, 20E	10	10	31
1280S, 40E	11	10	37
1280S, 60E	6.4	4.7	34
1280S, 80E	5.7	5.4	29
1280S,100E	--[a]	--	--
1280S,120E	11	11	40
1280S,140E	11	12	43
1280S,160E	11	11	51
1280S,180E	12	12	57

TABLE 2, cont.

DIRECT RADIATION LEVELS SYSTEMATICALLY MEASURED AT GRID LINE INTERSECTIONS

Grid Location	Gamma Exposure Rates at 1 m Above the Surface (μR/h)	Gamma Exposure Rates at the Surface (μR/h)	Beta-Gamma Dose Rates at the Surface (μrad/h)
1300S, 0E	9.5	8.1	35
1300S, 20E	11	11	63
1300S, 40E	11	10	40
1300S, 60E	8.0	9.8	37
1300S, 80E	5.4	5.7	28
1300S,100E	--[a]	--	--
1300S,120E	--[a]	--	--
1300S,140E	--[a]	--	--
1300S,160E	12	14	49
1300S,180E	12	13	58
1320S, 0E	9.8	10	17
1320S, 20E	11	11	52
1320S, 40E	10	11	68
1320S, 60E	10	10	52
1320S, 80E	6.0	5.4	37
1320S,100E	--[a]	--	--
1320S,120E	--[a]	--	--
1320S,140E	--[a]	--	--
1320S,160E	12	13	54
1320S,180E	12	13	62
1340S, 0E	9.8	9.8	32
1340S, 20E	10	11	38
1340S, 40E	10	10	35
1340S, 60E	9.9	10	29
1340S, 80E	6.0	6.0	26
1340S,100E	--[a]	--	--
1340S,120E	--[a]	--	--
1340S,140E	--[a]	--	--
1340S,160E	11	10	58
1340S,180E	11	13	69
1360S, 0E	8.0	8.0	22
1360S, 20E	10	11	46
1360S, 40E	11	11	40
1360S, 60E	10	11	34
1360S, 80E	10	11	37
1360S,100E	10	11	45
1360S,120E	11	11	49

TABLE 2, cont.

DIRECT RADIATION LEVELS SYSTEMATICALLY MEASURED AT GRID LINE INTERSECTIONS

Grid Location	Gamma Exposure Rates at 1 m Above the Surface (μR/h)	Gamma Exposure Rates at the Surface (μR/h)	Beta-Gamma Dose Rates at the Surface (μrad/h)
1360S,140E	10	9.9	34
1360S,160E	11	11	40
1360S,180E	12	12	34
1380S, 0E	9.8	9.8	26
1380S, 20E	11	11	42
1380S, 40E	10	11	63
1380S, 60E	10	10	42
1380S, 80E	10	11	37
1380S,100E	12	12	66
1380S,120E	10	11	31
1380S,140E	9.8	10	42
1380S,160E	12	11	62
1380S,180E	12	13	75
1400S, 0E	9.8	8.0	28
1400S, 20E	11	11	72
1400S, 40E	9.8	9.8	31
1400S, 60E	10	11	57
1400S, 80E	11	12	58
1400S,100E	9.8	10	45
1400S,120E	6.7	7.4	38
1400S,140E	6.7	6.7	31
1400S,160E	12	11	65
1400S,180E	11	11	48
1420S, 0E	8.7	8.0	22
1420S, 20E	8.0	10	48
1420S, 40E	8.4	11	45
1420S, 60E	--[b]	--	--
1420S, 80E	--[b]	--	--
1420S,100E	7.4	8.0	42
1420S,120E	7.4	8.0	42
1420S,140E	6.0	6.7	38
1420S,160E	12	13	69
1420S,180E	11	12	57
1440S, 0E	8.7	8.4	31
1440S, 20E	10	11	49
1440S, 40E	11	11	51
1440S, 60E	10	12	63

TABLE 2, cont.

DIRECT RADIATION LEVELS SYSTEMATICALLY MEASURED AT GRID LINE INTERSECTIONS

Grid Location	Gamma Exposure Rates at 1 m Above the Surface (μR/h)	Gamma Exposure Rates at the Surface (μR/h)	Beta-Gamma Dose Rates at the Surface (μrad/h)
1440S, 80E	--[b]	--	--
1440S,100E	9.8	9.5	37
1440S,120E	6.7	6.0	25
1440S,140E	6.7	6.7	43
1440S,160E	11	12	34
1440S,180E	11	11	48
1460S, 0E	8.0	8.7	32
1460S, 20E	10	11	52
1460S, 40E	6.7	6.7	26
1460S, 60E	7.4	7.4	55
1460S, 80E	6.7	7.4	55
1460S,100E	13	14	57
1460S,120E	6.7	7.0	29
1460S,140E	8.7	9.8	42
1460S,160E	12	10	45
1460S,180E	11	11	46
1480S, 0E	8.0	8.0	34
1480S, 20E	11	11	42
1480S, 40E	11	11	52
1480S, 60E	11	11	52
1480S, 80E	12	12	55
1480S,100E	12	12	35
1480E,120E	7.4	7.7	40
1480E,140E	11	11	60
1480S,160E	11	10	46
1480S,180E	11	10	45
1500S, 0E	8.0	8.4	23
1500S, 20E	10	10	38
1500S, 40E	11	10	62
1500S, 60E	11	11	42
1500S, 80E	12	11	52
1500S,100E	12	12	32
1500S,120E	9.5	8.7	25
1500S,140E	8.4	8.0	32
1500S,160E	11	10	55
1500S,180E	10	10	35

TABLE 2, cont.

DIRECT RADIATION LEVELS SYSTEMATICALLY MEASURED AT GRID LINE INTERSECTIONS

Grid Location	Gamma Exposure Rates at 1 m Above the Surface (μR/h)	Gamma Exposure Rates at the Surface (μR/h)	Beta-Gamma Dose Rates at the Surface (μrad/h)
1520S, 0E	8.4	8.4	34
1520S, 20E	7.4	7.0	28
1520S, 40E	7.4	7.0	25
1520S, 60E	8.7	7.7	31
1520S, 80E	8.0	7.4	26
1520S,100E	8.7	8.4	49
1520S,120E	8.0	7.4	42
1520S,140E	7.4	7.0	31
1520S,160E	11	10	37
1520S,180E	10	10	40

[a] Measurements not taken due to presence of gravel piles.
[b] Measurements not taken due to presence of the Maintenance Building.

TABLE 3

DIRECT RADIATION LEVELS AT SELECTED LOCATIONS
IDENTIFIED BY THE WALKOVER SURFACE SCAN

Location[a]	Grid Point	Exposure Rate (μR/h) at Contact		Surface Dose Rate (μrad/h)	Soil Sample[b]
		Before Sampling	After Sampling		
1	514S,300E	39	30	195	B1
2	500S,176E	28	30	131	B2
3	771S,170E	55	98	150	B3
4	782S,169E	79	200	282	B4
5	796S,170E	130	430	490	B5
6	799S,173E	94	200	564	B6
7	809S,172E	67	120	244	B7
8	1280S,126E	200	410	618	B8
9	1260S,158E	170	55	808	B9
10	1460S, 91E	55	120	207	B10
11	1471S, 97E	35	59	149	B11
12	1458S, 91E	45	94	167	B12
13	1455S,105E	26	53	130	B13
14	1506S,111E	24	43	89	B14
15	1488S,118E	22	41	112	B15
16	1239S,138E	32	41	147	B16
17	1233S,137E	28	37	140	B17
18	1175S,114E	39	28	182	B18
19	1107S,216E	160	280	571	B19
20	1087S,217E	280	43	1056	B20
21	1054S,209E	39	35	234	B21
22	1062S,216E	79	120	288	B22

[a] Refer to Figures 3 and 4.
[b] Soil concentrations are presented in Table 5.

TABLE 4

RADIONUCLIDE CONCENTRATIONS IN SURFACE SOIL SAMPLES
FROM GRID LINE INTERSECTIONS

Sample No.	Location	Radionuclide Concentrations (pCi/g)[a] Ra-226	U 235	U-238	Cs-137
1	320S, 20E	0.98 ± 0.24[b]	<0.27	<3.48	0.46 ± 0.12
2	320S, 60E	1.03 ± 0.24	<0.24	<3.78	0.75 ± 0.14
3	320S,100E	0.72 ± 0.28	<0.29	<3.15	0.29 ± 0.16
4	320S,140E	1.10 ± 0.26	<0.24	<6.42	1.41 ± 0.20
5	320S,180E	0.83 + 0.22	<0.24	<4.30	0.35 ± 0.10
6	320S,220E	2.30 ± 0.42	<0.24	<7.65	0.96 ± 0.23
7	320S,260E	0.43 ± 0.24	<0.25	6.16 ± 11.12	0.39 ± 0.12
8	320S,300E	1.17 ± 0.26	<0.24	<4.34	0.49 ± 0.12
9	320S,340E	<0.17	<0.29	<4.55	0.46 ± 0.16
10	320S,380E	0.59 ± 0.20	<0.24	<4.56	0.59 ± 0.12
11	320S,420E	0.50 ± 0.36	<0.23	<5.42	0.55 ± 0.14
12	320S,460E	0.58 ± 0.22	<0.24	<3.55	0.31 ± 0.10
13	320S,500E	0.57 ± 0.22	<0.23	<2.56	0.60 ± 0.12
14	320S,540E	0.61 ± 0.18	<0.24	7.04 ± 10.24	0.64 ± 0.12
15	320S,580E	0.43 ± 0.28	<0.25	4.90 ± 8.80	0.64 ± 0.12
16	320S,620E	0.37 ± 0.16	<0.24	<3.67	0.64 ± 0.12
17	320S,660E	0.54 ± 0.22	<0.24	<3.91	0.42 ± 0.10
18	320S,700E	0.51 ± 0.26	<0.24	<5.47	0.84 ± 0.10
19	320S,740E	0.54 ± 0.22	<0.20	<3.21	0.46 ± 0.12
20	320S,780E	0.54 ± 0.26	<0.24	<4.04	0.68 ± 0.14
21	340S, 40E	0.43 ± 0.22	<0.26	<4.64	0.50 ± 0.14
22	340S, 80E	0.44 ± 0.20	<0.24	<4.10	0.64 ± 0.16
23	340S,120E	0.67 ± 0.32	<0.23	<4.13	0.54 ± 0.16
24	340S,160E	0.53 + 0.20	0.61 + 0.60	<3.47	0.46 + 0.14
25	340S,200E	0.39 ± 0.20	<0.22	<3.69	0.55 ± 0.14
26	340S,240E	0.51 ± 0.18	<0.24	<4.40	0.31 ± 0.14
27	340S,280E	0.60 ± 0.22	<0.25	<3.28	<0.03
28	340S,320E	0.52 ± 0.27	<0.24	<4.19	<0.04
29	340S,360E	0.89 ± 0.32	<0.32	<4.30	0.26 ± 0.10
30	340S,400E	0.41 ± 0.20	<0.24	<5.75	0.12 ± 0.12
31	340S,440E	0.54 ± 0.20	<0.23	<3.38	0.10 ± 0.08
32	340S,480E	0.59 ± 0.28	<0.24	<3.75	0.09 ± 0.10
33	340S,520E	0.75 ± 0.22	<0.21	<3.83	0.08 ± 0.10
34	340S,560E	0.67 ± 0.24	<0.24	<4.17	0.11 ± 0.10
35	340S,600E	0.47 ± 0.32	<0.25	<3.81	0.68 ± 0.14
36	340S,640E	0.51 ± 0.30	<0.25	<5.11	0.17 ± 0.10
37	340S,680E	0.76 ± 0.22	<0.24	<4.07	<0.03
38	340S,720E	0.48 ± 0.26	<0.24	<4.30	0.16 ± 0.12

TABLE 4, cont.

RADIONUCLIDE CONCENTRATIONS IN SURFACE SOIL SAMPLES
FROM GRID LINE INTERSECTIONS

Sample No.	Location	Radionuclide Concentrations (pCi/g) Ra-226	U-235	U-238	Cs-137
39	340S,760E	0.53 ± 0.20	<0.23	<3.95	0.25 ± 0.10
40	360S, 20E	0.51 ± 0.22	<0.24	<4.43	0.28 ± 0.10
41	360S, 60E	0.49 ± 0.26	<0.36	<3.56	0.30 ± 0.12
42	360S,100E	0.68 ± 0.24	<0.24	<4.52	<0.04
43	360S,140E	0.40 ± 0.18	<0.24	<3.49	0.42 ± 0.14
44	360S,180E	0.36 ± 0.20	<0.24	<3.11	0.47 ± 0.12
45	360S,220E	0.51 ± 0.20	<0.25	<3.87	0.62 ± 0.16
46	360S,260E	0.33 ± 0.16	<0.24	<4.23	0.05 ± 0.08
47	360S,300E	0.75 ± 0.24	<0.24	<4.36	<0.05
48	360S,340E	0.60 ± 0.20	<0.27	<5.18	<0.04
49	360S,380E	0.37 ± 0.22	<0.20	<3.42	<0.03
50	360S,420E	0.59 ± 0.20	<0.24	<4.67	<0.04
51	360S,460E	0.65 ± 0.20	<0.26	<3.76	<0.04
52	360S,500E	0.69 ± 0.24	<0.24	<3.91	0.06 ± 0.06
53	360S,540E	0.71 ± 0.26	<0.28	<3.18	0.14 ± 0.12
54	360S,580E	0.41 ± 0.18	<0.24	<3.30	0.11 ± 0.08
55	360S,620E	<0.13	<0.22	<3.30	0.60 ± 0.12
56	360S,660E	0.33 ± 0.26	<0.23	<3.94	0.92 ± 0.14
57	360S,700E	0.53 ± 0.22	<0.24	<3.51	<0.03
58	360S,740E	0.52 ± 0.24	<0.24	<3.51	0.19 ± 0.10
59	380S, 40E	0.71 ± 0.30	<0.33	<5.07	0.72 ± 0.16
60	380S, 80E	0.43 ± 0.20	<0.24	<4.30	0.63 ± 0.12
61	380S,120E	0.36 ± 0.24	<0.32	<5.14	1.04 ± 0.26
62	380S,160E	0.87 ± 0.26	0.33 ± 0.67	<4.52	1.22 ± 0.22
63	380S,200E	0.50 ± 0.28	<0.22	<3.90	0.54 ± 0.16
64	380S,240E	0.45 ± 0.20	<0.24	<4.66	0.38 ± 0.14
65	380S,280E	0.58 ± 0.24	<0.27	<4.80	<0.05
66	380S,320E	0.37 ± 0.30	<0.24	<4.18	0.10 ± 0.10
67	380S,360E	0.63 ± 0.32	<0.24	<4.89	0.20 ± 0.16
68	380S,380E	0.41 ± 0.24	<0.24	<4.20	<0.04
69	380S,400E	0.70 ± 0.24	<0.24	<4.61	<0.04
70	380S,440E	0.43 ± 0.22	<0.24	<3.18	0.06 ± 0.08
71	380S,480E	0.51 ± 0.20	<0.25	<3.86	0.35 ± 0.10
72	380S,520E	0.53 ± 0.22	<0.27	<3.01	<0.04
73	380S,560E	0.73 ± 0.24	<0.28	<3.49	0.16 ± 0.12
74	380S,600E	0.59 ± 0.20	<0.25	<3.59	0.24 ± 0.10
75	380S,640E	0.62 ± 0.22	<0.24	<5.27	0.37 ± 0.14
76	380S,680E	0.77 ± 0.20	<0.24	<4.04	0.18 ± 0.12

TABLE 4, cont.

RADIONUCLIDE CONCENTRATIONS IN SURFACE SOIL SAMPLES
FROM GRID LINE INTERSECTIONS

Sample No.	Location	Radionuclide Concentrations (pCi/g) Ra-226	U-235	U-238	Cs-137
77	400S, 20E	0.66 ± 0.24	0.29 ± 0.61	<4.50	0.55 ± 0.14
78	400S, 60E	1.24 ± 0.32	<0.30	<5.15	0.53 ± 0.20
79	400S,100E	0.63 ± 0.24	<0.24	<3.77	0.76 ± 0.18
80	400S,140E	0.41 ± 0.18	0.32 ± 0.46	<4.48	0.70 ± 0.14
81	400S,180E	0.45 ± 0.24	<0.24	<6.03	0.78 ± 0.20
82	400S,220E	0.39 ± 0.22	<0.26	<4.71	0.40 ± 0.14
83	400S,260E	0.48 ± 0.24	<0.24	<4.66	0.50 ± 0.16
84	400S,300E	0.60 ± 0.22	<0.24	<4.48	0.15 ± 0.14
85	400S,340E	0.49 ± 0.26	<0.24	<4.81	0.41 ± 0.12
86	400S,380E	0.45 ± 0.20	<0.24	<4.00	<0.06
87	400S,420E	0.40 ± 0.16	<0.24	<4.67	0.14 ± 0.10
88	400S,460E	0.70 ± 0.16	<0.21	<3.86	0.04 ± 0.10
89	400S,500E	0.55 ± 0.10	<0.24	<4.06	<0.03
90	400S,540E	0.38 ± 0.24	<0.24	<3.79	0.24 ± 0.14
91	400S,580E	0.74 ± 0.18	<0.24	<4.10	0.14 ± 0.06
92	400S,620E	0.54 ± 0.16	<0.15	<3.32	0.32 ± 0.10
93	400S,660E	0.49 ± 0.18	<0.24	<3.59	0.49 ± 0.12
94	420S, 40E	0.52 ± 0.22	<0.24	<4.16	0.41 ± 0.12
95	420S, 80E	0.48 ± 0.22	<0.23	<4.77	0.53 ± 0.12
96	420S,120E	0.58 ± 0.20	<0.24	<4.30	0.35 ± 0.12
97	420S,160E	0.61 ± 0.30	<0.24	<5.28	2.00 ± 0.28
98	420S,200E	0.65 ± 0.24	<0.23	<4.16	0.21 ± 0.12
99	420S,240E	0.43 ± 0.20	<0.24	5.76 ± 12.76	0.49 ± 0.12
100	420S,280E	0.56 ± 0.22	<0.25	<4.80	0.71 ± 0.16
101	420S,320E	0.52 ± 0.18	<0.24	<4.61	0.71 ± 0.12
102	420S,360E	0.49 ± 0.18	<0.24	<4.61	0.43 ± 0.12
103	420S,400E	0.33 ± 0.18	<0.24	<3.33	0.04 ± 0.06
104	420S,440E	0.44 ± 0.18	<0.22	<4.14	0.07 ± 0.10
105	420S,480E	0.64 ± 0.26	0.54 ± 0.63	<5.16	0.10 ± 0.06
106	420S,520E	0.70 ± 0.20	<0.23	<3.09	<0.03
107	420S,560E	0.60 ± 0.20	<0.24	<4.34	<0.05
108	420S,600E	0.58 ± 0.24	<0.25	<4.65	0.35 ± 0.12
109	420S,640E	0.52 ± 0.20	<0.24	<3.85	0.71 ± 0.14
110	440S, 20E	0.48 ± 0.28	<0.24	5.75 ± 11.72	0.34 ± 0.12
111	440S, 60E	0.65 ± 0.20	<0.24	<4.37	0.39 ± 0.10
112	440S,100E	0.54 ± 0.20	<0.25	<4.97	0.40 ± 0.12
113	440S,140E	0.72 ± 0.22	<0.24	<4.74	0.40 ± 0.12
114	440S,180E	0.57 ± 0.22	<0.27	<5.01	0.80 ± 0.18

TABLE 4, cont.

RADIONUCLIDE CONCENTRATIONS IN SURFACE SOIL SAMPLES
FROM GRID LINE INTERSECTIONS

Sample No.	Location	Radionuclide Concentrations (pCi/g) Ra-226	U-235	U-238	Cs-137
115	440S,220E	0.59 ± 0.24	<0.24	<3.92	0.08 ± 0.08
116	440S,260E	0.58 ± 0.20	<0.24	<5.35	0.64 ± 0.12
117	440S,300E	0.41 ± 0.24	<0.24	<3.70	0.48 ± 0.16
118	440S,340E	0.48 ± 0.30	<0.27	<5.15	0.91 ± 0.18
119	440S,380E	0.42 ± 0.20	<0.24	<3.67	0.46 ± 0.12
120	440S,420E	0.49 ± 0.20	<0.24	<3.85	0.16 ± 0.08
121	440S,460E	0.52 ± 0.18	<0.24	<3.46	0.21 ± 0.10
122	440S,500E	0.50 ± 0.20	<0.23	4.82 ± 10.84	0.09 ± 0.10
123	440S,540E	0.66 ± 0.20	<0.24	<4.41	0.06 ± 0.08
124	440S,580E	0.58 ± 0.24	<0.22	<3.27	0.12 ± 0.08
125	440S,620E	0.46 ± 0.28	<0.26	<5.07	0.49 ± 0.06
126	460S, 40E	0.51 ± 0.20	<0.24	<3.03	0.59 ± 0.20
127	460S, 80E	0.34 ± 0.26	0.77 ± 0.50	6.88 ± 6.44	0.60 ± 0.14
128	460S,120E	0.42 ± 0.24	<0.24	<4.59	0.48 ± 0.12
129	460S,160E	0.53 ± 0.32	<0.24	<4.95	1.75 ± 0.20
130	460S,200E	0.67 ± 0.28	<0.24	<3.54	0.62 ± 0.16
131	460S,240E	0.37 ± 0.24	<0.24	<2.89	0.48 ± 0.14
132	460S,280E	0.74 ± 0.20	<0.24	<3.73	0.66 ± 0.14
133	460S,320E	0.31 ± 0.20	<0.24	<4.44	0.45 ± 0.12
134	460S,360E	0.57 ± 0.20	<0.24	<3.77	0.70 ± 0.14
135	460S,400E	0.55 ± 0.24	<0.24	<4.86	<0.04
136	460S,440E	0.57 ± 0.20	<0.24	<4.78	0.42 ± 0.12
137	460S,480E	0.64 ± 0.20	<0.24	<3.94	<0.03
138	460S,520E	0.65 ± 0.20	<0.24	10.8 ± 9.62	0.09 ± 0.10
139	460S,560E	0.67 ± 0.20	<0.24	<4.73	0.79 ± 0.14
140	460S, 20E	0.50 ± 0.22	<0.24	6.34 ± 13.34	0.48 ± 0.12
141	480S, 60E	0.45 ± 0.28	<0.25	<1.50	0.62 ± 0.14
142	480S,100E	0.30 ± 0.18	<0.24	<4.84	0.87 ± 0.18
143	480S,140E	0.55 ± 0.26	<0.24	<4.57	0.32 ± 0.17
144	480S,180E	0.21 ± 0.20	<0.29	<4.49	0.54 ± 0.14
145	480S,220E	0.77 ± 0.22	<0.24	<4.54	0.26 ± 0.10
146	480S,260E	0.44 ± 0.16	<0.24	<4.56	0.85 ± 0.16
147	480S,300E	0.60 ± 0.18	0.37 ± 0.48	<4.28	1.06 ± 0.18
148	480S,340E	0.56 ± 0.30	<0.24	<4.82	1.09 ± 0.18
149	480S,380E	0.31 ± 0.24	<0.24	<6.62	0.94 ± 0.16
150	480S,420E	0.51 ± 0.22	<0.24	<4.89	0.09 ± 0.08
151	480S,460E	0.60 ± 0.20	<0.24	<4.06	<0.04
152	480S,500E	0.43 ± 0.22	<0.24	<4.25	0.21 ± 0.06

TABLE 4, cont.

RADIONUCLIDE CONCENTRATIONS IN SURFACE SOIL SAMPLES
FROM GRID LINE INTERSECTIONS

Sample No.	Location	Radionuclide Concentrations (pCi/g) Ra-226	U 235	U-238	Cs-137
153	480S,540E	0.59 ± 0.18	<0.24	<4.06	0.16 ± 0.10
154	500S, 40E	0.47 ± 0.18	0.31 ± 0.44	<3.67	0.54 ± 0.16
155	500S, 80E	0.44 ± 0.22	<0.24	<3.71	0.54 ± 0.14
156	500S,120E	0.32 ± 0.24	<0.24	<6.22	0.98 ± 0.18
157	500S,160E	0.65 ± 0.34	<0.32	<4.52	0.48 ± 0.18
158	500S,200E	0.05 ± 0.20	<0.24	<3.42	0.55 ± 0.14
159	500S,240E	0.68 ± 0.20	<0.24	<4.09	0.53 ± 0.14
160	500S,280E	0.58 ± 0.22	0.26 ± 0.66	<3.10	0.53 ± 0.14
161	500S,320E	0.68 ± 0.24	<0.24	<4.22	0.69 ± 0.14
162	500S,360E	0.48 ± 0.26	0.68 ± 0.54	<5.13	0.88 ± 0.16
163	500S,400E	0.40 ± 0.34	<0.24	<3.50	1.45 ± 0.20
164	500S,440E	0.44 ± 0.18	<0.25	<5.15	0.32 ± 0.16
165	500S,480E	0.61 ± 0.20	<0.24	<4.68	<0.04
166	500S,520E	0.50 ± 0.22	0.79 ± 0.52	<4.08	0.50 ± 0.14
167	520S, 20E	0.49 ± 0.18	<0.24	<5.63	0.58 ± 0.12
168	520S, 60E	0.45 ± 0.18	<0.24	<4.57	0.53 ± 0.12
169	520S,100E	1.04 ± 0.26	<0.25	<4.46	0.78 ± 0.16
170	520S,140E	0.49 ± 0.18	<0.24	<4.47	0.59 ± 0.14
171	520S,180E	0.45 ± 0.26	<0.24	<5.63	0.74 ± 0.16
172	520S,220E	<0.13	<0.24	<3.76	0.08 ± 0.10
173	520S,260E	0.51 ± 0.22	<0.23	<3.45	0.45 ± 0.12
174	520S,300E	0.42 ± 0.24	<0.24	<2.59	0.41 ± 0.10
175	520S,340E	0.47 ± 0.20	<0.24	<4.14	0.31 ± 0.12
176	520S,380E	0.65 ± 0.22	<0.24	<5.04	0.73 ± 0.14
177	520S,420E	0.43 ± 0.20	<0.24	<3.78	0.26 ± 0.14
178	520S,460E	0.63 ± 0.22	<0.24	<4.93	0.81 ± 0.14
179	540S, 40E	0.40 ± 0.18	<0.24	<2.80	0.40 ± 0.12
180	540S, 80E	0.60 ± 0.22	<0.24	<4.71	0.77 ± 0.14
181	540S,120E	0.62 ± 0.30	<0.24	5.77 ± 9.74	0.43 ± 0.16
182	540S,140E	0.37 ± 0.16	<0.24	<3.64	0.46 ± 0.12
183	540S,160E	0.59 ± 0.22	<0.24	<4.50	1.08 ± 0.20
184	540S,180E	0.51 ± 0.24	<0.24	<2.57	0.25 ± 0.10
185	540S,200E	0.77 ± 0.22	<0.24	4.88 ± 9.14	0.48 ± 0.10
186	540S,220E	0.47 ± 0.16	<0.24	<3.58	<0.03
187	540S,240E	0.46 ± 0.20	<0.24	<3.49	0.43 ± 0.12
188	540S,260E	0.46 ± 0.20	<0.22	<3.35	0.54 ± 0.14
189	540S,280E	0.44 ± 0.20	<0.24	<3.92	0.13 ± 0.10
190	540S,320E	0.64 ± 0.18	<0.24	3.95 ± 16.18	0.50 ± 0.12
191	540S,360E	0.66 ± 0.20	<0.24	<5.40	0.45 ± 0.12

TABLE 4, cont.

RADIONUCLIDE CONCENTRATIONS IN SURFACE SOIL SAMPLES
FROM GRID LINE INTERSECTIONS

Sample No.	Location	Radionuclide Concentrations (pCi/g)			
		Ra-226	U-235	U-238	Cs 137
193	540S,400E	0.49 ± 0.18	<0.24	<3.26	0.23 ± 0.08
193	540S,440E	0.37 ± 0.16	<0.16	<3.40	0.60 ± 0.10
194	560S, 20E	0.59 ± 0.20	<0.24	<2.81	0.62 ± 0.12
195	560S, 60E	0.45 ± 0.18	<0.24	<3.76	0.11 ± 0.08
196	560S,100E	0.63 ± 0.18	<0.24	<3.73	0.51 ± 0.12
197	560S,140E	0.52 ± 0.20	<0.24	<4.28	0.70 ± 0.14
198	560S,180E	0.56 ± 0.20	<0.24	<3.67	0.46 ± 0.18
199	560S,220E	0.43 ± 0.18	<0.24	<4.02	1.02 ± 0.16
200	560S,260E	0.13 ± 0.18	<0.24	<3.26	0.46 ± 0.14
201	560S,300E	0.66 ± 0.18	<0.24	<4.08	0.36 ± 0.14
202	560S,340E	0.43 ± 0.22	<0.24	5.78 ± 12.66	0.12 ± 0.10
203	560S,380E	0.53 ± 0.16	<0.24	<4.27	0.25 ± 0.08
204	560S,420E	0.55 ± 0.18	<0.21	<3.63	0.23 ± 0.08
205	580S, 40E	0.31 ± 0.16	<0.24	<3.60	0.84 ± 0.14
206	580S, 80E	0.54 ± 0.20	<0.24	<3.78	0.47 ± 0.12
207	580S,120E	0.50 ± 0.22	<0.21	<1.68	0.60 ± 0.12
208	580S,160E	0.53 ± 0.26	<0.24	<5.74	3.74 ± 0.30
209	580S,200E	0.53 ± 0.20	<0.24	<3.02	1.79 ± 0.22
210	580S,240E	0.60 ± 0.26	<0.24	<4.32	0.64 ± 0.14
211	580S,280E	0.60 ± 0.24	<0.24	<5.06	1.12 ± 0.18
212	580S,320E	0.65 ± 0.16	<0.24	<4.64	0.56 ± 0.14
213	600S, 20E	0.33 ± 0.16	<0.24	<4.11	0.54 ± 0.12
214	600S, 60E	0.34 ± 0.18	<0.24	<4.10	0.54 ± 0.14
215	600S,100E	0.38 ± 0.16	<0.24	<3.07	0.46 ± 0.14
216	600S,140E	0.62 ± 0.24	<0.24	7.81 ± 11.04	0.63 ± 0.14
217	600S,180E	0.54 ± 0.24	<0.24	<3.38	0.51 ± 0.14
218	600S,220E	0.41 ± 0.16	<0.21	<2.97	0.42 ± 0.10
219	600S,260E	0.40 ± 0.16	<0.24	<3.10	0.39 ± 0.12
220	600S,300E	0.41 ± 0.18	<0.34	5.55 ± 7.68	0.15 ± 0.08
221	620S, 40E	0.44 ± 0.20	<0.24	<4.10	0.38 ± 0.12
222	620S, 80E	0.48 ± 0.14	<0.24	<3.07	0.20 ± 0.06
223	620S,120E	0.24 ± 0.16	<0.24	<4.25	0.19 ± 0.08
224	620S,160E	0.47 ± 0.16	<0.24	<3.41	0.31 ± 0.04
225	620S,200E	0.40 ± 0.16	<0.24	7.30 ± 8.54	0.37 ± 0.10
226	620S,240E	0.46 ± 0.16	<0.24	<4.01	0.36 ± 0.12
227	620S,280E	0.39 ± 0.22	<0.24	<2.38	0.47 ± 0.13
228	620S,320E	0.49 ± 0.22	<0.24	<3.82	0.42 ± 0.12
229	640S, 20E	0.44 ± 0.20	<0.20	<2.65	0.54 ± 0.10
230	640S, 60E	0.29 ± 0.14	<0.24	<3.26	0.31 ± 0.12

TABLE 4, cont.

RADIONUCLIDE CONCENTRATIONS IN SURFACE SOIL SAMPLES
FROM GRID LINE INTERSECTIONS

Sample No.	Location	Radionuclide Concentrations (pCi/g) Ra-226	U-235	U-238	Cs-137
231	640S,100E	0.41 ± 0.22	<0.24	<3.24	0.44 ± 0.12
232	640S,140E	0.44 ± 0.18	<0.24	8.20 ± 7.57	0.77 ± 0.14
233	640S,180E	0.71 ± 0.24	<0.24	<3.02	0.25 ± 0.10
234	640S,220E	0.55 ± 0.18	<0.24	<2.52	0.45 ± 0.10
235	640S,260E	0.79 ± 0.20	<0.24	<3.48	0.47 ± 0.14
236	640S,300E	0.40 ± 0.18	<0.24	<4.22	0.33 ± 0.10
237	660S, 40E	0.40 ± 0.12	<0.24	<4.14	0.42 ± 0.12
238	660S, 80E	0.36 ± 0.14	<0.24	<2.77	0.50 ± 0.12
239	660S,120E	1.35 ± 0.22	<0.24	<4.13	0.51 ± 0.12
240	660S,160E	0.63 ± 0.16	<0.24	7.04 ± 6.12	0.47 ± 0.12
241	660S,200E	0.50 ± 0.16	<0.24	<3.16	0.22 ± 0.08
242	660S,240E	0.29 ± 0.22	<0.24	<3.81	0.46 ± 0.12
243	660S,280E	0.42 ± 0.22	<0.24	<3.04	0.43 ± 0.12
244	660S,320E	0.36 ± 0.16	<0.24	<3.35	0.59 ± 0.12
245	680S, 20E	0.45 ± 0.16	<0.24	<3.87	0.39 ± 0.12
246	680S, 60E	0.40 ± 0.14	<0.22	<3.19	0.56 ± 0.10
247	680S,100E	0.36 ± 0.16	<0.20	<3.34	0.45 ± 0.12
248	680S,140E	0.49 ± 0.16	<0.24	<3.61	<0.03
249	680S,180E	0.46 ± 0.12	0.42 ± 0.36	<3.29	0.18 ± 0.10
250	680S,220E	0.39 ± 0.18	<0.24	<3.90	0.33 ± 0.10
251	680S,260E	0.49 ± 0.16	<0.22	<2.96	0.46 ± 0.16
252	680S,300E	0.30 ± 0.20	<0.24	6.90 ± 8.84	0.47 ± 0.12
253	700S, 40E	0.15 ± 0.16	<0.24	<2.28	1.24 ± 0.16
254	700S, 80E	0.28 ± 0.14	<0.24	<3.04	0.16 ± 0.08
255	700S,120E	0.40 ± 0.20	<0.24	<3.08	0.45 ± 0.12
256	700S,160E	0.53 ± 0.22	<0.24	<3.40	0.78 ± 0.12
257	700S,200E	0.48 ± 0.18	<0.24	<4.18	0.23 ± 0.08
258	700S,240E	0.36 ± 0.16	<0.24	<1.87	0.63 ± 0.12
259	700S,280E	0.41 ± 0.18	<0.24	<3.05	0.22 ± 0.10
260	700S,320E	0.31 ± 0.18	<0.24	<3.92	0.80 ± 0.16
261	720S, 20E	0.18 ± 0.12	<0.14	<3.24	0.33 ± 0.10
262	720S, 60E	0.47 ± 0.16	<0.25	<3.81	0.67 ± 0.12
263	720S,100E	0.43 ± 0.20	<0.24	14.8 ± 13.28	0.41 ± 0.12
264	720S,140E	0.30 ± 0.16	<0.24	<2.79	0.49 ± 0.10
265	720S,180E	0.77 ± 0.22	<0.24	<3.87	0.70 ± 0.14
266	720S,220E	0.55 ± 0.20	<0.24	<4.17	0.15 ± 0.12
267	720S,260E	0.44 ± 0.16	<0.24	<4.49	0.56 ± 0.14
268	720S,300E	0.49 ± 0.18	<0.24	<1.69	0.47 ± 0.12
269	740S, 40E	0.43 ± 0.20	<0.22	<3.37	0.24 ± 0.10
270	740S, 80E	0.35 ± 0.18	<0.24	<2.97	0.47 ± 0.14
271	740S,120E	0.44 ± 0.20	0.18 ± 0.50	<4.42	0.24 ± 0.10
272	740S,160E	0.43 ± 0.16	<0.24	<2.64	0.16 ± 0.08
273	740S,200E	0.37 ± 0.28	<0.24	<4.06	0.37 ± 0.12

TABLE 4, cont.

RADIONUCLIDE CONCENTRATIONS IN SURFACE SOIL SAMPLES
FROM GRID LINE INTERSECTIONS

Sample No.	Location	Radionuclide Concentrations (pCi/g) Ra-226	U-235	U-238	Cs-137
274	740S,240E	0.38 ± 0.18	<0.24	<3.61	0.62 ± 0.12
275	740S,280E	0.48 ± 0.16	<0.24	<4.55	0.46 ± 0.10
276	740S,320E	0.24 ± 0.22	<0.21	5.29 ± 6.14	0.39 ± 0.12
277	760S, 20E	0.37 ± 0.16	<0.24	<2.46	0.23 ± 0.08
278	760S, 60E	0.66 ± 0.16	<0.24	<3.59	0.43 ± 0.10
279	760S,100E	0.39 ± 0.16	<0.24	<4.05	0.51 ± 0.12
280	760S,140E	0.55 ± 0.08	<0.12	1.95 ± 4.64	0.09 ± 0.04
281	760S,160E	0.52 ± 0.14	<0.24	<4.66	1.15 ± 0.09
282	760S,180E	0.97 ± 0.18	<0.24	<3.07	0.50 ± 0.12
283	760S,220E	0.75 ± 0.28	<0.24	5.14 ± 8.46	0.61 ± 0.14
284	760S,260E	0.48 ± 0.22	<0.24	4.96 ± 8.96	0.43 ± 0.12
285	760S,300E	0.55 ± 0.22	<0.24	<3.81	0.39 ± 0.12
286	780S, 40E	0.48 ± 0.18	<0.24	<3.72	0.39 ± 0.10
287	780S, 80E	0.43 ± 0.24	<0.22	<3.55	0.10 ± 0.08
288	780S,120E	0.41 ± 0.18	<0.22	<3.45	0.26 ± 0.08
289	780S,160E	0.71 ± 0.22	<0.24	<2.71	0.19 ± 0.14
290	780S,200E	1.09 ± 0.22	<0.24	<4.73	0.27 ± 0.08
291	780S,240E	0.50 ± 0.16	<0.24	<2.97	0.15 ± 0.10
292	780S,280E	0.55 ± 0.18	<0.24	<3.19	0.11 ± 0.10
293	800S, 20E	0.45 ± 0.16	<0.24	<3.21	0.43 ± 0.10
294	800S, 60E	0.42 ± 0.18	0.27 ± 0.59	<3.66	0.38 ± 0.10
295	800S,100E	0.55 ± 0.18	<0.24	<3.99	0.65 ± 0.14
296	800S,140E	0.34 ± 0.18	0.39 ± 0.44	<3.16	0.31 ± 0.05
297	800S,180E	0.48 ± 0.20	0.42 ± 0.50	<4.19	0.48 ± 0.12
298	800S,220E	0.54 ± 0.18	<0.24	<3.93	0.77 ± 0.14
299	800S,260E	0.62 ± 0.16	<0.24	<3.77	<0.04
300	800S,300E	0.45 ± 0.20	<0.24	<3.95	0.19 ± 0.10
301	820S, 40E	0.43 ± 0.20	<0.24	<3.43	0.40 ± 0.10
302	820S, 80E	0.49 ± 0.20	<0.24	<4.10	0.11 ± 0.06
303	820S,120E	0.42 ± 0.16	<0.24	<3.77	0.26 ± 0.10
304	820S,160E	0.52 ± 0.28	<0.24	<3.37	0.23 ± 0.10
305	820S,200E	0.68 ± 0.24	<0.24	<4.41	0.97 ± 0.14
306	820S,240E	0.59 ± 0.16	<0.24	<3.91	0.35 ± 0.10
307	820S,280E	0.60 ± 0.20	<0.24	<3.63	0.33 ± 0.12
308	840S, 20E	0.40 ± 0.16	<0.24	5.09 ± 7.44	0.31 ± 0.10
309	840S, 60E	<0.12	<0.24	<3.74	0.21 ± 0.14
310	840S,100E	0.48 ± 0.18	<0.24	<3.11	0.30 ± 0.14
311	840S,140E	0.38 ± 0.20	<0.24	<4.26	0.63 ± 0.12
312	840S,180E	0.58 ± 0.18	<0.24	4.09 ± 8.36	0.28 ± 0.10

TABLE 4, cont.

RADIONUCLIDE CONCENTRATIONS IN SURFACE SOIL SAMPLES
FROM GRID LINE INTERSECTIONS

Sample No.	Location	Radionuclide Concentrations (pCi/g) Ra-226	U-235	U-238	Cs-137
313	840S,220E	0.76 ± 0.20	<0.24	<3.50	0.57 ± 0.10
314	840S,260E	0.45 ± 0.16	<0.24	<4.17	0.34 ± 0.12
315	840S,300E	0.31 ± 0.18	<0.24	<3.44	0.71 ± 0.14
316	860S, 40E	0.43 ± 0.22	<0.24	<3.20	0.27 ± 0.12
317	860S, 80E	0.52 ± 0.18	0.46 ± 0.71	<4.84	0.33 ± 0.10
318	860S,120E	0.40 ± 0.22	<0.24	6.34 ± 6.38	0.30 ± 0.12
319	860S,160E	0.53 ± 0.20	<0.24	<3.71	0.37 ± 0.10
320	860S,200E	0.41 ± 0.20	<0.24	<3.79	0.36 ± 0.10
321	860S,240E	0.50 ± 0.20	<0.24	<4.00	0.05 ± 0.08
322	860S,280E	8.27 ± 0.62	<0.24	<8.41	0.36 ± 0.26
323	880S, 20E	0.40 ± 0.20	<0.24	5.57 ± 12.24	0.26 ± 0.10
324	880S, 60E	0.37 ± 0.22	<0.23	<2.82	0.35 ± 0.12
325	880S,100E	0.81 ± 0.28	<0.24	<5.42	0.15 ± 0.12
326	880S,140E	0.50 ± 0.24	<0.24	<3.84	0.37 ± 0.14
327	880S,180E	0.44 ± 0.20	0.43 ± 0.50	<3.67	0.42 ± 0.12
328	880S,220E	0.62 ± 0.20	<0.24	<3.68	0.56 ± 0.14
329	880S,260E	0.39 ± 0.16	<0.24	<3.41	0.33 ± 0.10
330	880S,300E	0.81 ± 0.24	<0.21	<3.30	0.23 ± 0.12
331	900S, 40E	0.30 ± 0.20	<0.24	<4.91	0.39 ± 0.12
332	900S, 80E	0.34 ± 0.22	<0.24	<4.34	0.40 ± 0.14
333	900S,120E	0.68 ± 0.22	<0.24	<4.75	0.15 ± 0.10
334	900S,160E	0.64 ± 0.20	<0.22	<4.33	0.15 ± 0.10
335	900S,200E	0.38 ± 0.16	<0.24	<3.90	0.29 ± 0.08
336	900S,240E	0.36 ± 0.20	<0.24	<5.47	0.17 ± 0.12
337	900S,280E	0.52 ± 0.20	<0.24	<3.98	0.09 ± 0.10
338	920S, 20E	0.58 ± 0.20	<0.24	<3.58	0.24 ± 0.16
339	920S, 60E	0.43 ± 0.18	<0.24	<3.80	0.27 ± 0.08
340	920S,100E	0.39 ± 0.28	<0.24	7.55 ± 7.84	0.48 ± 0.12
341	920S,140E	0.56 ± 0.18	<0.24	<3.64	0.19 ± 0.10
342	920S,180E	0.39 ± 0.26	<0.24	<3.74	0.53 ± 0.12
343	920S,220E	0.44 ± 0.16	<0.24	<3.68	0.08 ± 0.06
344	920S,260E	0.42 ± 0.20	<0.24	<3.73	0.37 ± 0.12
345	940S, 40E	0.43 ± 0.18	0.45 ± 0.56	<3.75	<0.07
346	940S, 80E	0.38 ± 0.20	<0.24	6.75 ± 8.76	0.37 ± 0.12
347	940S,120E	0.52 ± 0.22	<0.24	<3.25	0.41 ± 0.12
348	940S,160E	0.56 ± 0.18	<0.24	<2.95	0.27 ± 0.08
349	940S,200E	0.58 ± 0.72	0.36 ± 0.66	<3.65	0.28 ± 0.10
350	940S,240E	0.45 ± 0.22	<0.24	<3.42	0.12 ± 0.10
351	960S, 20E	0.71 ± 0.26	<0.24	<4.47	0.33 ± 0.12

TABLE 4, cont.

RADIONUCLIDE CONCENTRATIONS IN SURFACE SOIL SAMPLES
FROM GRID LINE INTERSECTIONS

Sample No.	Location	Radionuclide Concentrations (pCi/g) Ra-226	U-235	U-238	Cs-137
352	960S, 60E	0.48 ± 0.24	<0.24	<4.56	0.34 ± 0.12
353	960S,100E	0.50 ± 0.18	<0.24	<1.96	0.29 ± 0.16
354	960S,140E	0.40 ± 0.20	<0.24	<3.30	0.20 ± 0.12
355	960S,180E	0.70 ± 0.27	<0.24	<3.91	0.57 ± 0.14
356	960S,220E	0.53 ± 0.18	<0.24	<4.36	0.56 ± 0.12
357	960S,260E	0.43 ± 0.22	<0.24	<3.13	0.76 ± 0.14
358	980S, 40E	0.50 ± 0.24	<0.24	<4.60	0.23 ± 0.12
359	980S, 80E	0.61 ± 0.20	<0.24	<4.59	0.35 ± 0.18
360	980S,120E	0.34 ± 0.28	<0.24	<4.11	0.39 ± 0.10
361	980S,160E	0.49 ± 0.18	<0.24	<3.05	0.37 ± 0.12
362	980S,200E	1.46 ± 0.24	<0.24	<2.74	0.42 ± 0.16
363	1000S, 20E	0.53 ± 0.24	<0.24	<3.73	0.30 ± 0.14
364	1000S, 60E	0.52 ± 0.18	<0.24	<3.91	0.45 ± 0.12
365	1000S,100E	0.43 ± 0.18	<0.24	<3.70	0.23 ± 0.12
366	1000S,140E	0.59 ± 0.20	<0.24	<3.91	0.29 ± 0.10
367	1000S,180E	1.63 ± 0.28	<0.24	<2.67	0.54 ± 0.12
368	1020S, 40E	0.36 ± 0.28	<0.22	<2.98	0.39 ± 0.10
369	1020S, 80E	0.51 ± 0.18	0.41 ± 0.50	<4.48	0.36 ± 0.12
370	1020S,120E	0.58 ± 0.22	<0.24	<3.41	0.55 ± 0.16
371	1020S,160E	0.61 ± 0.22	<0.24	<5.16	0.70 ± 0.16
372	1020S,200E	0.69 ± 0.22	<0.24	<2.66	1.57 ± 0.18
373	1040S, 20E	0.57 ± 0.20	<0.24	<5.20	0.52 ± 0.12
374	1040S, 60E	0.33 ± 0.20	<0.24	<3.61	0.61 ± 0.20
375	1040S,100E	0.61 ± 0.18	<0.24	<4.46	0.56 ± 0.13
376	1040S,140E	0.54 ± 0.20	<0.24	<5.20	0.57 ± 0.14
377	1040S,180E	0.50 ± 0.20	<0.24	8.99 ± 10.36	0.68 ± 0.14
378	1060S, 40E	0.68 ± 0.22	<0.24	<5.48	0.57 ± 0.13
379	1060S, 80E	0.52 ± 0.20	<0.24	<2.98	0.20 ± 0.10
380	1060S,120E	0.38 ± 0.14	<0.24	<3.24	0.43 ± 0.10
381	1060S,160E	0.61 ± 0.20	<0.24	<3.07	0.34 ± 0.12
382	1060S,200E	1.32 ± 0.26	<0.24	<3.90	0.33 ± 0.10
383	1080S, 20E	0.53 ± 0.24	<0.24	<3.16	0.63 ± 0.12
384	1080S, 60E	0.58 ± 0.22	<0.24	<3.66	0.49 ± 0.14
385	1080S,100E	0.54 ± 0.20	0.51 ± 0.20	<4.42	0.39 ± 0.12
386	1080S,140E	0.46 ± 0.22	<0.24	<4.02	0.64 ± 0.14
387	1080S,180E	0.74 ± 0.24	<0.24	<4.51	0.76 ± 0.16
388	1100S, 40E	0.47 ± 0.18	<0.21	<2.57	[illegible] ± 0.10
389	1100S, 80E	0.36 ± 0.16	<0.24	<4.26	[illegible] ± 0.12
390	1100S,120E	0.71 ± 0.22	<0.24	<3.89	[illegible] ± 0.14

TABLE 4, cont.

RADIONUCLIDE CONCENTRATIONS IN SURFACE SOIL SAMPLES
FROM GRID LINE INTERSECTIONS

Sample No.	Location	Radionuclide Concentrations (pCi/g) Ra-226	U-235	U-238	Cs-137
391	1100S,160E	0.56 ± 0.20	<0.24	<5.17	0.06 ± 0.12
392	1120S, 20E	0.70 ± 0.30	<0.24	<3.79	0.94 ± 0.16
393	1120S, 60E	0.53 ± 0.22	<0.24	<4.05	0.56 ± 0.14
394	1120S,100E	0.43 ± 0.20	<0.24	<5.24	0.53 ± 0.12
395	1120S,140E	0.58 ± 0.22	<0.24	<3.87	0.39 ± 0.12
396	1120S,180E	0.78 ± 0.12	<0.24	<4.97	0.78 ± 0.14
397	1140S, 40E	0.65 ± 0.20	<0.24	<3.82	0.47 ± 0.12
398	1140S, 80E	0.37 ± 0.20	<0.24	<4.33	0.89 ± 0.14
399	1140S,120E	0.61 ± 0.22	<0.24	<2.82	0.12 ± 0.10
400	1140S,160E	0.94 ± 0.20	0.44 ± 0.42	<4.71	<0.05
401	1160S, 20E	0.55 ± 0.20	<0.24	<3.95	0.52 ± 0.12
402	1160S, 60E	0.54 ± 0.24	<0.21	<3.49	0.36 ± 0.12
403	1160S,100E	0.39 ± 0.20	<0.24	<3.17	0.58 ± 0.12
404	1160S,140E	0.55 ± 0.24	<0.24	<2.25	0.11 ± 0.10
405	1160S,180E	0.54 ± 0.18	<0.24	<3.08	0.14 ± 0.08
406	1180S, 40E	0.58 ± 0.26	<0.24	<4.52	0.30 ± 0.12
407	1180S, 80E	0.69 ± 0.24	<0.24	<4.77	0.31 ± 0.10
408	1180S,120E	0.41 ± 0.24	<0.22	4.54 ± 8.64	0.33 ± 0.10
409	1180S,160E	0.42 ± 0.20	<0.24	<3.59	0.19 ± 0.12
410	1200S, 20E	0.74 ± 0.22	<0.24	<3.59	0.86 ± 0.14
411	1200S, 60E	0.51 ± 0.20	<0.24	<3.41	0.13 ± 0.08
412	1200S,100E	0.64 ± 0.22	<0.24	<2.86	0.27 ± 0.10
413	1200S,140E	0.61 ± 0.20	<0.24	<3.64	0.16 ± 0.08
414	1200S,180E	0.47 ± 0.18	<0.24	<4.04	0.10 ± 0.10
415	1220S, 40E	0.45 ± 0.20	<0.24	<3.89	0.21 ± 0.08
416	1220S, 80E	0.64 ± 0.24	<0.24	<3.01	0.13 ± 0.12
417	1220S,120E	1.14 ± 0.22	<0.24	<3.19	0.08 ± 0.08
418	1220S,160E	0.46 ± 0.14	<0.24	<2.16	0.09 ± 0.06
419	1240S, 20E	0.44 ± 0.16	<0.24	<2.98	0.20 ± 0.10
420	1240S, 60E	0.62 ± 0.18	<0.24	<3.13	0.14 ± 0.10
421	1240S,100E	0.59 ± 0.26	<0.24	<2.79	0.15 ± 0.12
422	1240S,140E	0.53 ± 0.26	<0.22	<3.73	0.10 ± 0.08
423	1240S,180E	0.58 ± 0.22	<0.23	2.20 ± 8.42	0.16 ± 0.16
424	1260S, 20E	0.69 ± 0.26	0.42 ± 0.58	6.44 ± 8.62	0.19 ± 0.12
425	1260S, 40E	0.43 ± 0.24	<0.24	<3.27	0.45 ± 0.16
426	1260S, 60E	0.71 ± 0.24	<0.24	<4.84	0.12 ± 0.10
None	1260S, 80E	---c	---	---	---
None	1260S,100E	---c	---	---	---
427	1260S,120E	0.38 ± 0.20	<0.24	<5.11	0.63 ± 0.14
428	1260S,140E	0.36 ± 0.18	<0.24	<4.99	0.59 ± 0.14
429	1260S,160E	0.47 ± 0.20	<0.24	<3.53	0.32 ± 0.14

TABLE 4, cont.

RADIONUCLIDE CONCENTRATIONS IN SURFACE SOIL SAMPLES
FROM GRID LINE INTERSECTIONS

Sample No.	Location	Radionuclide Concentrations (pCi/g) Ra-226	U-235	U-238	Cs-137
430	1260S,180E	1.51 ± 0.38	<0.32	<5.05	0.16 ± 0.10
431	1280S, 20E	0.65 ± 0.20	<0.24	<4.34	0.17 ± 0.08
432	1280S, 40E	0.53 ± 0.18	<0.24	<4.70	0.19 ± 0.12
433	1280S, 60E	0.43 ± 0.20	<0.24	8.42 ± 10.07	<0.03
None	1280S, 80E	---c	---	---	---
None	1280S,100E	---c		---	---
434	1280S,120E	0.44 ± 0.16	<0.24	<3.15	0.13 ± 0.08
435	1280S,140E	0.76 ± 0.24	<0.24	<3.43	0.65 ± 0.14
436	1280S,160E	0.67 ± 0.22	<0.24	<4.68	0.60 ± 0.14
437	1300S, 20E	0.40 ± 0.22	<0.24	<5.07	0.64 ± 0.14
438	1300S, 40E	0.51 ± 0.22	<0.24	<2.66	0.67 ± 0.16
439	1300S, 60E	0.67 ± 0.22	<0.24	<3.71	0.04 ± 0.10
None	1300S, 80E	---c	---		---
None	1300S,100E	---c	---	---	---
440	1300S,120E	1.91 ± 0.40	<0.24	<4.86	<0.05
None	1300S,140E	---c	---	---	---
441	1300S,160E	1.76 ± 0.34	<0.24	<6.71	0.09 ± 0.12
442	1320S, 20E	0.46 ± 0.20	<0.24	<2.84	0.48 ± 0.16
443	1320S, 40E	0.69 ± 0.22	<0.24	<5.23	0.42 ± 0.12
444	1320S, 60E	0.60 ± 0.20	<0.24	<4.64	0.31 ± 0.10
None	1320S, 80E	--c	---	---	---
None	1320S,120E	---c	---	---	---
445	1320S,140E	1.94 ± 0.36	<0.24	<5.45	<0.04
446	1320S,160E	0.60 ± 0.26	<0.24	<1.51	0.92 ± 0.16
447	1340S, 20E	0.59 ± 0.26	<0.24	<4.38	0.63 ± 0.14
448	1340S, 40E	0.42 ± 0.22	<0.24	<4.07	0.34 ± 0.12
449	1340S, 58E	0.38 ± 0.18	<0.24	<3.45	0.03 ± 0.08
None	1340S, 80E	---c	---	---	---
None	1340S,100E	--c	---	---	---
450	1340S,120E	1.73 ± 0.32	<0.24	<3.88	<0.03
451	1340S,140E	0.62 ± 0.22	<0.24	<3.71	0.16 ± 0.08
452	1340S,160E	0.48 ± 0.20	<0.24	<3.59	0.05 ± 0.08
453	1360S, 20E	0.58 ± 0.20	<0.24	<3.05	0.12 ± 0.08
454	1360S, 40E	0.62 ± 0.22	<0.24	<3.71	0.16 ± 0.08
455	1360S, 60E	0.42 ± 0.18	<0.24	<2.77	0.46 ± 0.10
456	1360S, 80E	0.66 ± 0.16	<0.24	<3.62	0.12 ± 0.06
457	1360S,100E	0.80 ± 0.26	<0.24	<2.82	0.22 ± 0.10
458	1360S,120E	1.54 ± 0.30	<0.24	<4.14	0.11 ± 0.10
459	1360S,140E	0.55 ± 0.20	<0.23	<4.40	0.35 ± 0.10
460	1360S,160E	0.40 ± 0.16	<0.24	<3.59	<0.04
461	1380S, 20E	0.47 ± 0.20	<0.24	<4.92	0.14 ± 0.12
462	1380S, 40E	0.50 ± 0.22	<0.24	<4.23	0.17 ± 0.08

TABLE 4, cont.

RADIONUCLIDE CONCENTRATIONS IN SURFACE SOIL SAMPLES
FROM GRID LINE INTERSECTIONS

Sample No.	Location	Radionuclide Concentrations (pCi/g) Ra 226	U-235	U-238	Cs-137
463	1380S, 60E	0.51 ± 0.22	<0.24	<3.65	0.62 ± 0.12
464	1380S, 80E	0.53 ± 0.18	<0.24	<2.52	0.33 ± 0.10
465	1380S,100E	0.75 ± 0.20	0.36 ± 0.48	<4.38	0.21 ± 0.17
466	1380S,120E	0.28 ± 0.10	<0.24	<1.11	0.02 ± 0.06
467	1380S,140E	1.06 ± 0.20	<0.24	<4.64	0.32 ± 0.14
468	1380S,160E	0.42 ± 0.18	0.43 ± 0.60	<3.29	0.26 ± 0.10
469	1400S, 20E	0.56 ± 0.14	<0.24	<4.20	0.20 ± 0.10
470	1400S, 40E	0.48 ± 0.18	<0.22	<4.81	0.12 ± 0.08
471	1400S, 60E	0.47 ± 0.22	<0.24	<3.30	0.12 ± 0.08
472	1400S, 80E	0.58 ± 0.18	<0.24	<3.38	0.11 ± 0.08
473	1399S,100E	0.47 ± 0.18	<0.24	<4.06	0.07 ± 0.08
None	1400S,120E	---d	---	---	---
None	1400S,140E	---d	---	---	---
None	1400S,160E	---d	---	---	---
474	1420S, 20E	0.51 ± 0.20	0.34 ± 0.54	<3.50	0.21 ± 0.10
475	1420S, 40E	0.67 ± 0.16	<0.24	<3.69	0.25 ± 0.10
None	1420S, 60E	---e	---	---	---
None	1420S, 80E	---e	---	---	---
None	1420S,100E	---e	---	---	---
None	1420S,120E	---d	---	---	---
476	1420S,150E	0.56 ± 0.18	<0.24	<2.37	0.10 ± 0.06
477	1420S,160E	1.16 ± 0.36	0.57 ± 0.87	<4.95	0.89 ± 0.13
478	1440S, 20E	1.76 ± 0.28	<0.24	<4.78	0.17 ± 0.10
479	1440S, 40E	0.49 ± 0.32	<0.24	<5.11	0.48 ± 0.14
480	1440S, 60E	0.57 ± 0.22	<0.24	<4.68	0.45 ± 0.12
None	1440S, 80E	---e	---	---	---
481	1440S,100E	0.59 ± 0.20	<0.24	<3.44	0.34 ± 0.10
482	1440S,120E	0.72 ± 0.20	<0.24	<3.60	0.14 ± 0.10
483	1440S,140E	0.19 ± 0.12	<0.13	2.56 ± 7.20	<0.01
None	1440S,160E	---d	---	---	---
484	1460S, 20E	0.53 ± 0.18	<0.24	<4.21	0.44 ± 0.12
485	1460S, 40E	0.39 ± 0.16	<0.24	<2.61	0.17 ± 0.06
None	1460S, 60E	---d	---	---	---
None	1460S, 80E	---d	---	---	---
486	1460S,100E	0.82 ± 0.28	<0.24	<3.58	0.39 ± 0.12
487	1460S,120E	0.65 ± 0.20	<0.24	<3.40	0.25 ± 0.08
488	1460S,140E	0.40 ± 0.20	<0.24	<2.54	0.06 ± 0.06
489	1460S,160E	0.52 ± 0.22	<0.24	<4.05	0.62 ± 0.14
490	1480S, 20E	0.82 ± 0.28	<0.24	<4.93	0.20 ± 0.12
491	1480S, 40E	0.54 ± 0.20	<0.24	<3.74	0.15 ± 0.08
492	1480S, 60E	0.59 ± 0.26	<0.24	<4.83	0.71 ± 0.14
493	1480S, 80E	0.60 ± 0.20	<0.24	<3.42	0.48 ± 0.12
494	1480S,100E	1.05 ± 0.22	<0.24	<4.14	0.27 ± 0.08
495	1480S,120E	0.64 ± 0.20	<0.24	<3.81	0.47 ± 0.16

TABLE 4, cont.

RADIONUCLIDE CONCENTRATIONS IN SURFACE SOIL SAMPLES
FROM GRID LINE INTERSECTIONS

Sample No.	Location	Radionuclide Concentrations (pCi/g)			
		Ra-226	U-235	U-238	Cs-137
496	1480S,140E	0.34 ± 0.16	<0.24	<2.94	0.33 ± 0.08
497	1500S, 20E	0.62 ± 0.24	<0.27	<2.61	0.06 ± 0.12
498	1500S, 40E	0.38 ± 0.16	<0.24	<3.71	0.09 ± 0.06
499	1500S, 60E	0.83 ± 0.28	<0.24	<5.06	0.15 ± 0.12
500	1500S, 80E	0.59 ± 0.18	<0.24	<3.22	0.16 ± 0.08
501	1500S,100E	0.54 ± 0.28	<0.24	<4.47	0.42 ± 0.16
502	1500S,120E	0.62 ± 0.30	<0.24	<4.03	0.25 ± 0.14

[a] Refer to Table 2 for direct radiation levels.
[b] Errors are 2σ based on counting statistics.
[c] No soil sample taken due to sand and gravel piles.
[d] No sample taken due to paved surface.
[e] No sample taken due to presence of maintenance building.

TABLE 5

RADIONUCLIDE CONCENTRATIONS IN SURFACE SOIL SAMPLES
FROM SELECTED LOCATIONS IDENTIFIED BY THE WALKOVER SCAN

Sample No.[a]	Location	Radionuclide Concentrations (pCi/g)[b]			
		Ra-226	U-235	U-238	Cs-137
B1	514S,300E	0.70 ± 0.24[c]	<0.31	<3.07	0.70 ± 0.16
B2	500S,176E	<0.15	<0.31	<6.99	1.31 ± 0.22
B3	771S,170E	51.9 ± 1.3	<0.31	1.78 ± 0.39	0.88 ± 0.32
B4	782S,169E	1.44 ± 0.26	0.64 ± 0.52	2.03 ± 0.45	0.34 ± 0.12
B5	796S,170E	11.9 ± 0.6	1.86 ± 1.28	36.6 ± 0.6	0.22 ± 0.16
B6	799S,173E	3.07 ± 0.38	<0.31	<5.67	1.11 ± 0.18
B7	809S,172E	13.4 ± 0.7	2.06 + 1.24	22.1 ± 0.6	0.53 ± 0.18
B8	1280S,126E	106 ± 2	<0.31	1.09 ± 0.33	1.73 ± 0.42
B9	1260S,158E	92.6 ± 2.3	<0.31	1.56 ± 0.52	1.32 ± 0.56
B10[d]	1460S, 91E	31.9 ± 1.2	1.86 ± 2.06	18.3 ± 0.4	0.75 ± 0.32
B11	1471S, 97E	0.35 ± 0.20	<0.31	<3.85	0.23 ± 0.10
B12	1458S, 91E	8.12 ± 0.64	<0.31	11.2 ± 0.4	<0.09
B13	1455S,105E	2.81 ± 0.40	<0.31	<5.77	0.25 ± 0.18
B14	1506S,111E	7.79 ± 0.20	0.97 + 1.18	<7.22	0.40 ± 0.20
B15	1488S,118E	2.79 ± 0.42	<0.31	<5.65	0.56 ± 0.20
B16	1239S,138E	4.68 ± 0.44	0.49 ± 0.74	<5.86	0.27 ± 0.12
B17[e]	1233S,137E	5.56 ± 0.58	<0.31	8.99 ± 0.53	<0.08
B18	1175S,114E	2.65 ± 0.34	<0.31	<4.18	0.14 ± 0.10
B19	1107S,216E	3.37 ± 4.74	<0.31	0.50 ± 0.55	7.11 ± 1.04
B20	1087S,217E	1020 ± 6	<0.31	2.85 ± 0.45	<1.22
B21	1054S,209E	41.6 ± 1.5	<0.31	1.39 ± 0.33	1.18 + 0.22
B22	1062S,216E	209 ± 4	<0.31	1.34 ± 0.48	<0.53

[a] Refer to Figures 3 and 4.
[b] Refer to Table 3 for direct radiation levels.
[c] Errors are 2σ based on counting statistics.
[d] Sample also contained 13.0 ± 1.54 pCi/g Th-232.
[e] Sample also contained 8.71 ± 1.32 pCi/g Th-232.

This page intentionally left blank

Excavated Area

Excerpt from Post-Remedial Action Report for the Niagara Falls Storage Site Vicinity Properties 1983 and 1984

This page intentionally left blank

DOE/OR/20722-84

Formerly Utilized Sites Remedial Action Program (FUSRAP)
Contract No. DE-ACO5-810R20722

POST-REMEDIAL ACTION REPORT FOR THE NIAGARA FALLS STORAGE SITE VICINITY PROPERTIES - 1983 AND 1984

Lewiston, New York

December 1986

Bechtel National, Inc.

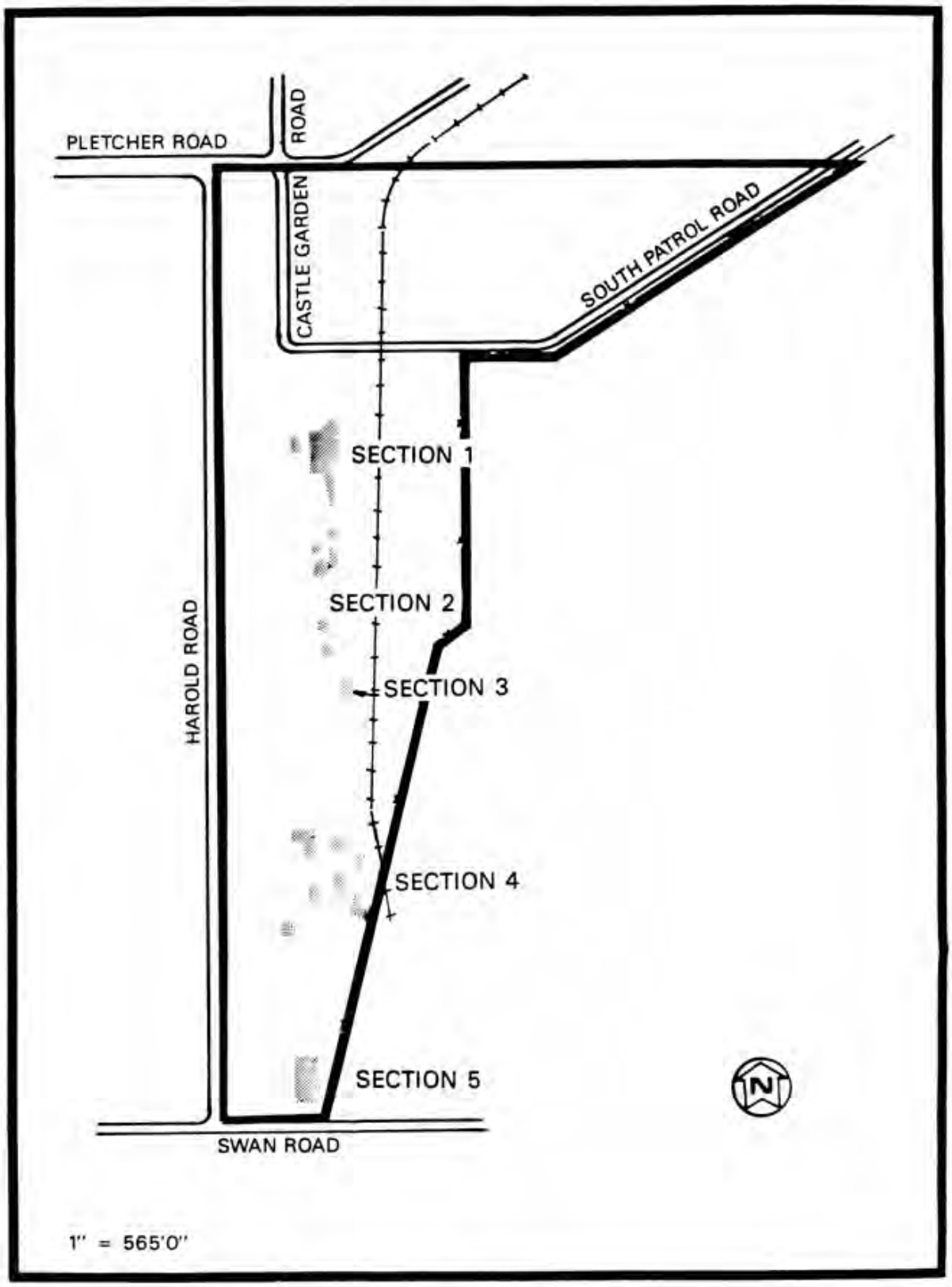

FIGURE 17 EXCAVATED AREAS ON PROPERTY Q

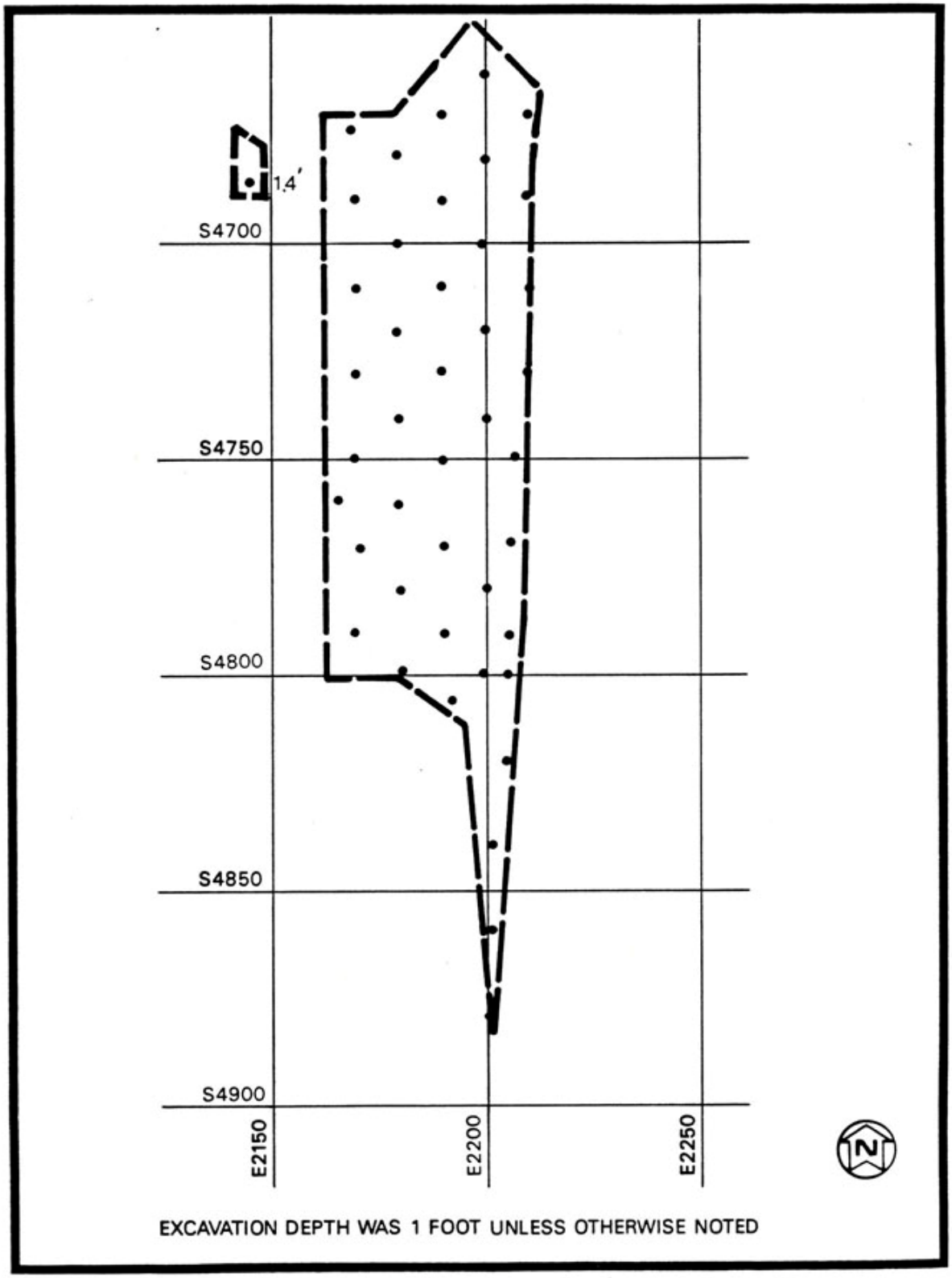

FIGURE 18 POST-REMEDIAL ACTION SAMPLING LOCATIONS ON PROPERTY Q - SECTION 1

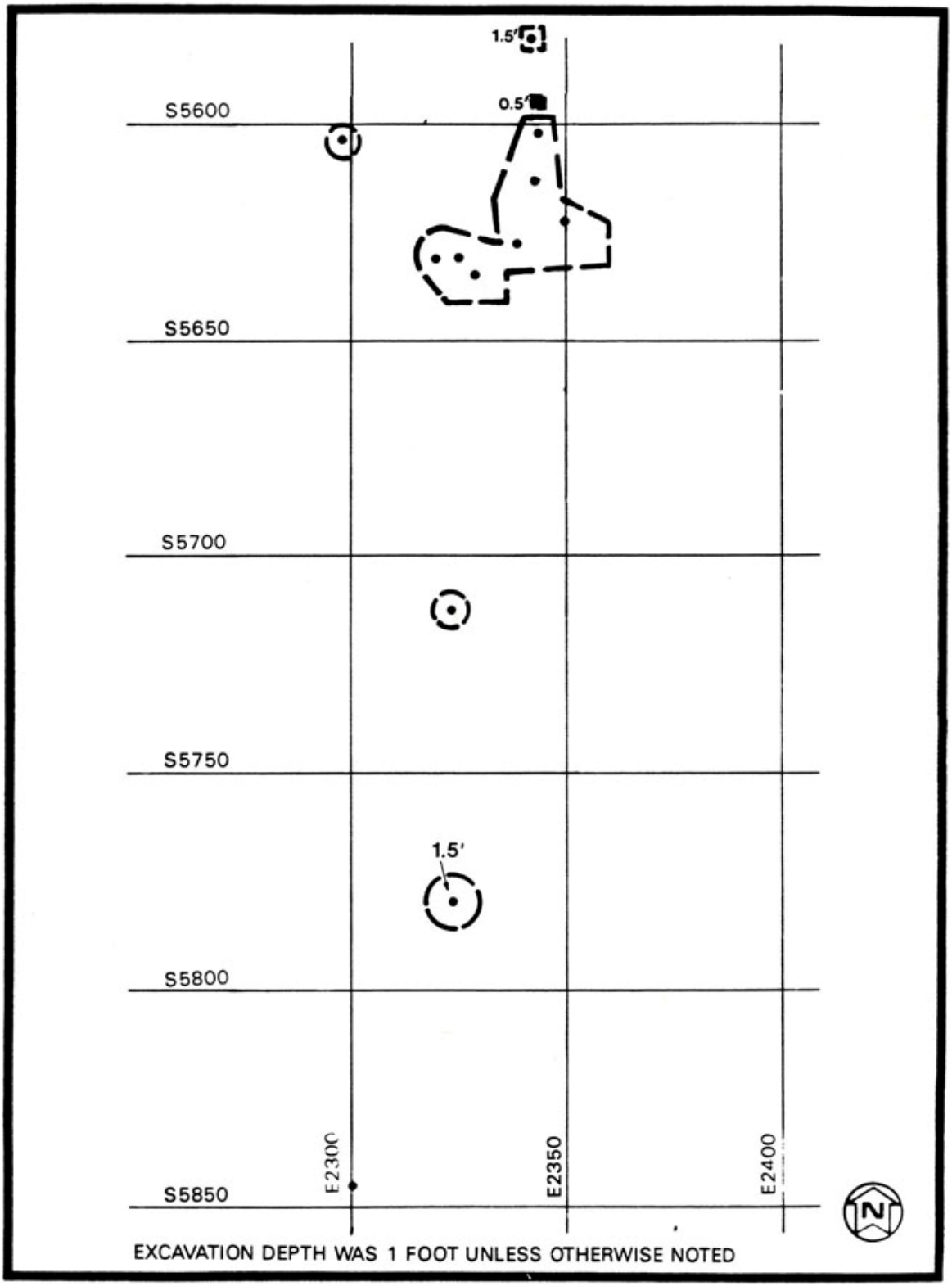

FIGURE 19 POST-REMEDIAL ACTION SAMPLING LOCATIONS ON PROPERTY Q - SECTION 2

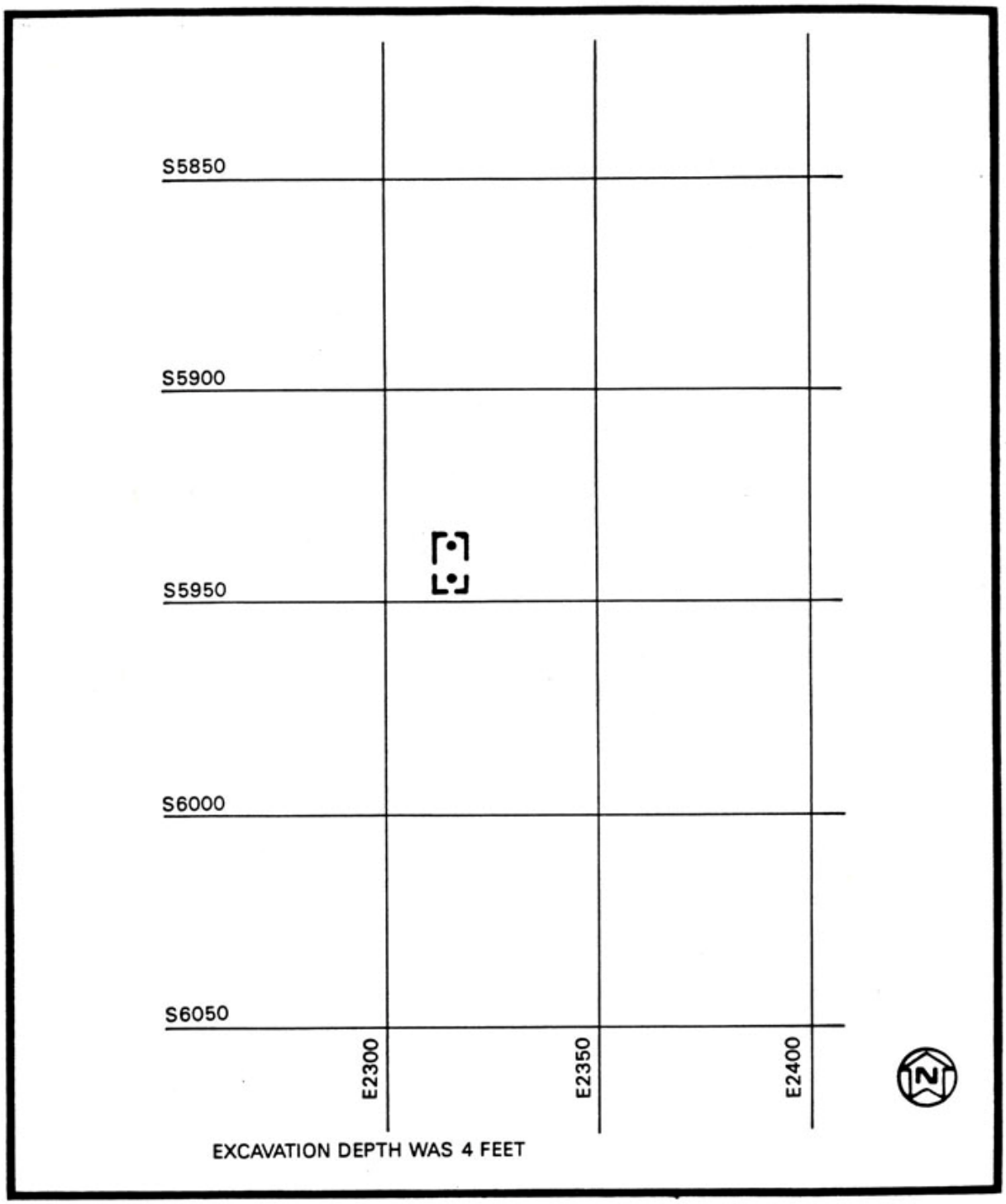

FIGURE 20 POST-REMEDIAL ACTION SAMPLING LOCATIONS ON PROPERTY Q - SECTION 3

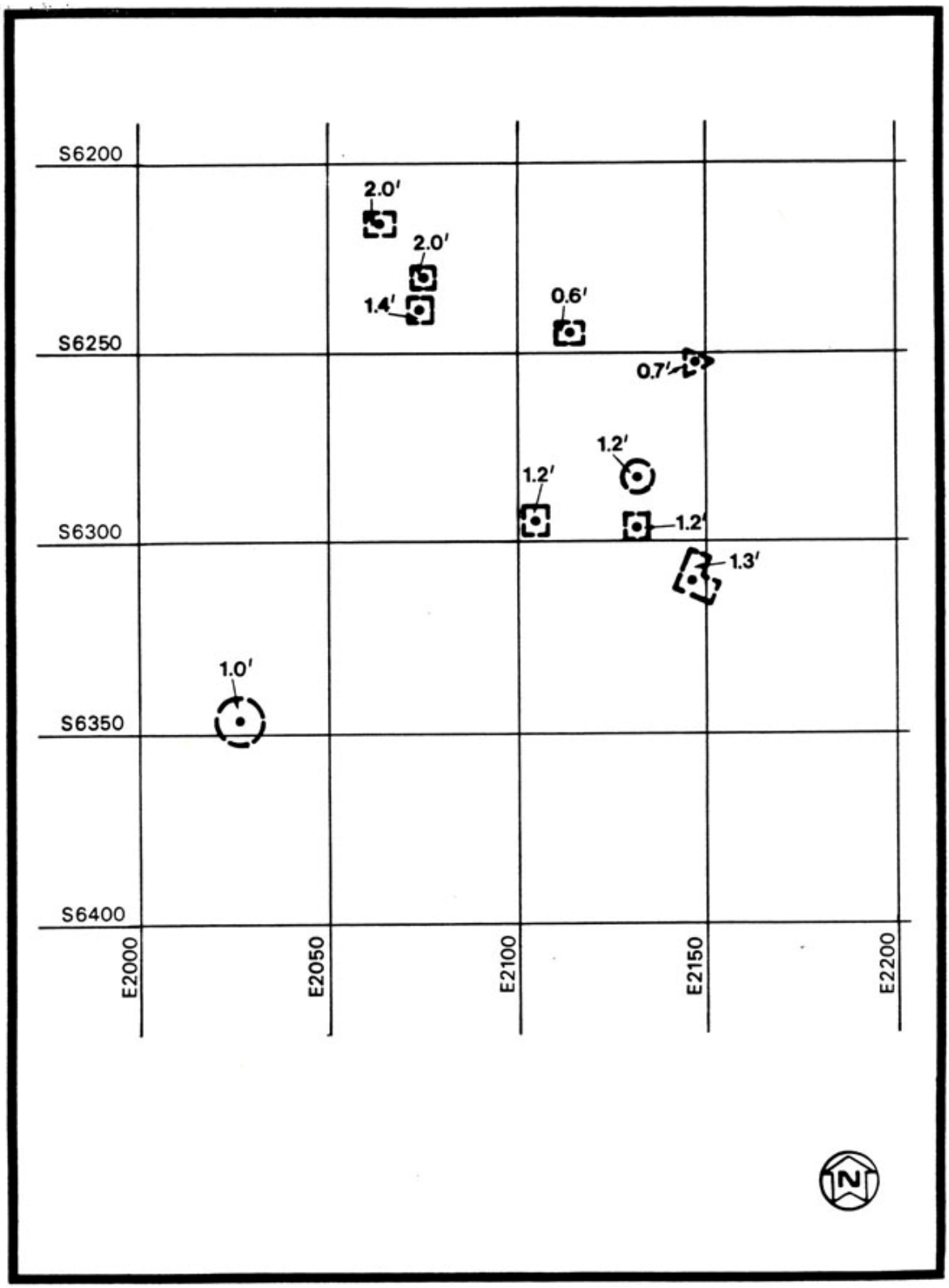

FIGURE 21 POST-REMEDIAL ACTION SAMPLING LOCATIONS ON PROPERTY Q - SECTION 4

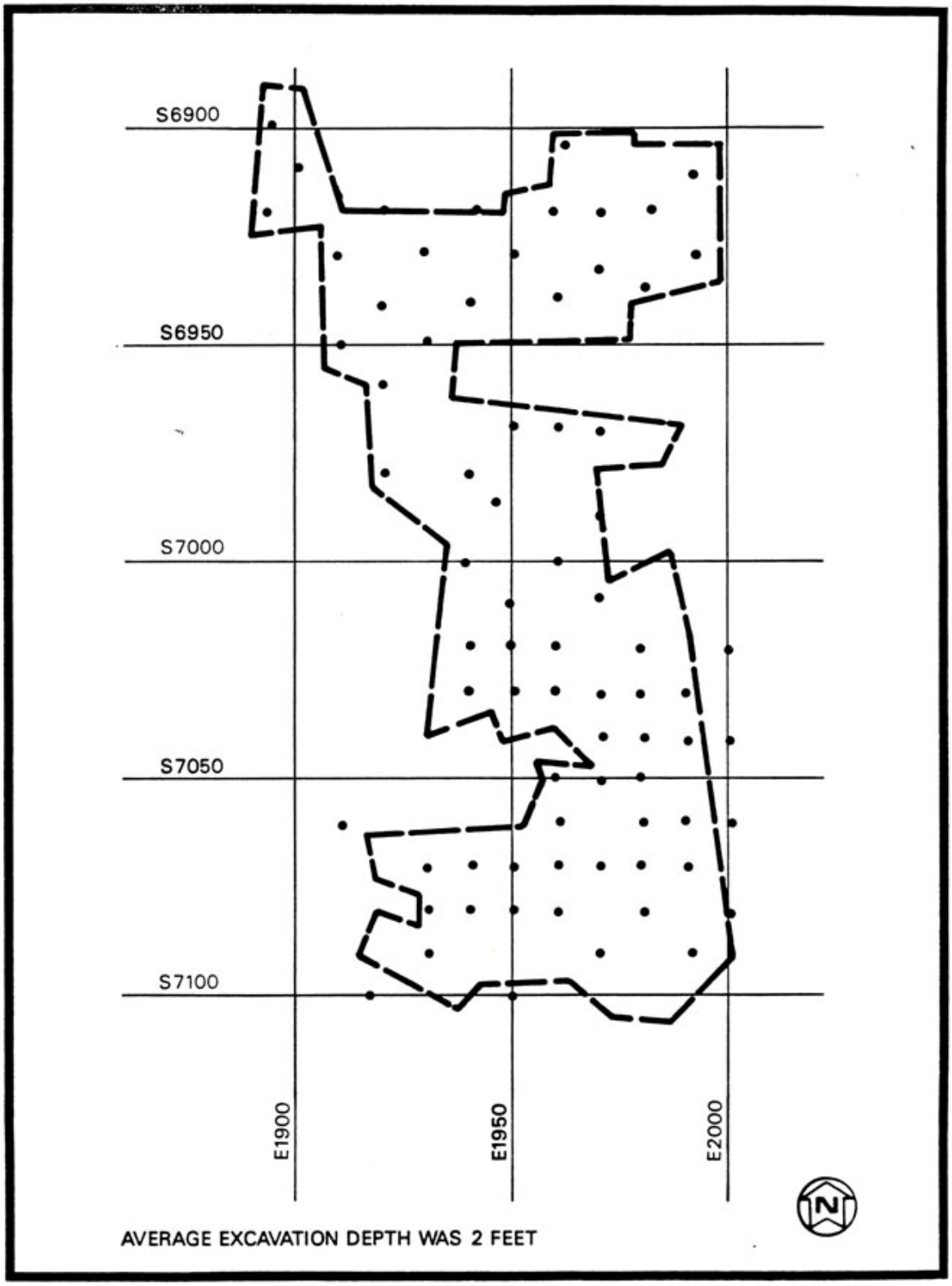

FIGURE 22 POST-REMEDIAL ACTION SAMPLING LOCATIONS ON PROPERTY Q - SECTION 5

TABLE 7

POST-REMEDIAL ACTION SAMPLING RESULTS

FOR PROPERTY Q

Grid Coordinates		Concentrations (pCi/g ±/- 1 sigma)		
E, W	N, S	Uranium-238	Radium-226	Thorium-232
E1890	S6900	A	1.2 ± 0.1	1.3 ± 0.2
E1890	56920	0.9 ± 1.3	1.5 ± 0.1	1.0 ± 0.2
E1900	S6910	A	1.3 ± 0.1	1.1 ± 0.2
E1910	S6930	A	0.9 ± 0.1	0.4±0.2
E1910	S6950	A	0.8 ± 0.1	0.7 ± 0.3
E1910	57060	A	1.4 ± 0.1	1.2±0.2
E1918	S7100	A	12.4 ± 0.6	7.1 ± 0.8
E1920	S6920	A	0.9 ± 0.1	0.7 ± 0.2
E1920	56940	A	1.0 ± 0.1	1.3 ± 0.2
E1920	S6960	A	1.1 ± 0.1	0.6 ± 0.2
E1920	S6980	A	0.9 ± 0.1	1.1 ± 0.2
E1930	56920	A	0.9 ± 0.1	1.2 ± 0.2
E1930	S6930	3.6 ± 0.1	0.7 ± 0.1	A
E1930	S6950	A	1.1 ± 0.1	1.6 ± 0.2
E1930	57070	A	1.3 ± 0.2	A
E1930	S7080	A	1.3 ± 0.1	1.7 ± 0.2
E1930	S7090	A	1.0 ± 0.1	1.2 ± 0.2
E1940	56920	A	1.0 ± 0.1	0.6 ± 0.1
E1940	S6940	A	1.2 ± 0.2	1.5 ± 0.2
E1940	S6980	A	0.8 ± 0.1	0.7 ± 0.2
E1940	57000	A	0.7 ± 0.1	0.8 ± 0.2
E1940	S7020	A	0.9 ± 0.1	A
E1940	57070	A	1.2 ± 0.1	0.7 ± 0.2
E1940	57080	6.4 ± 2.5	6.6 ± 0.3	4.0 ± 0.3
E1950	56930	A	2.1 ± 0.1	1.0 ± 0.2
E1950	S6970	2.8 ± 1.3	1.1 ± 0.1	0.9 ± 0.1
E1950	56990	A	1.2 ± 0.1	1.5 ± 0.2
E1950	57010	A	0.9 ± 0.1	0.7 ± 0.2
E1950	57030	3.4 ± 1.6	1.1 ± 0.1	A
E1950	S7070	24.7 ± 4.5	37.4 ± 0.6	16.3 ± 0.8
E1950	S7080	12.7 ± 3.1	6.6 ± 0.3	3.8 ± 0.4
E1950	57090	A	1.0 ± 0.1	0.8 ± 0.2
E1950	57100	A	2.3 ± 0.2	1.2 ± 0.2
E1960	S6900	A	1.5 ± 0.1	1.5 ± 0.2
E1960	56920	A	0.8 ± 0.1	0.5 ± 0.1
E1960	S6940	A	1.4 ± 0.1	1.3±0.2
E1960	56970	0.8 ± 1.1	0.8 ± 0.1	1.0 ± 0.2
E1960	57000	A	0.9 ± 0.1	0.9 ± 0.1
E1960	57020	2.8 ± 1.3	0.7 ± 0.1	1.2 ± 0.2
E1960	S7050	A	11.9 ± 0.3	4.6 ± 0.4
E1960	S7060	4.2 ± 1.7	1.7 ± 0.2	2.0 ± 0.3
E1960	S7070	A	1.1 ± 0.1	0.9 ± 0.2
E1960	S7080	A	1.7 ± 0.1	1.1 ± 0.2

TABLE 7 (continued)

Grid Coordinates		Concentrations (pCi/g ±/- 1 sigma)		
E, W	N, S	Uranium-238	Radium-226	Thorium-232
E1970	S6920	A	1.2 ± 0.1	0.6 ± 0.1
E1970	S6930	A	0.8 ± 0.1	0.5 ± 0.1
E1970	S6970	A	1.0 ± 0.1	1.0 ± 0.2
E1970	S6990	A	0.8 ± 0.1	0.9 ± 0.2
E1970	S7010	2.5 ± 1.1	1.1 ± 0.1	0.9 ± 0.1
E1970	S7030	A	1.1 ± 0.2	1.3 ± 0.3
E1970	S7040	A	1.2 ± 0.1	1.3 ± 0.2
E1970	S7050	A	4.5 ± 0.2	3.5 ± 0.3
E1970	S7050	12.2 ± 3.5	11.9 ± 0.4	5.9 ± 0.4
E1970	S7070	A	1.0 ± 0.1	0.7 ± 0.2
E1970	S7090	A	A	1.2 ± 0.2
E1980	S6920	3.6 ± 1.5	1.2 ± 0.1	1.0 ± 0.1
E1980	S6940	A	0.8 ± 0.1	0.9 ± 0.2
E1980	S7020	6.1 ± 2.4	7.1 ± 0.3	3.4 ± 0.4
E1980	S7030	A	0.9 ± 0.1	1.7 ± 0.2
E1980	S7040	A	1.0 ± 0.1	1.0 ± 0.2
E1980	S7050	A	0.9 ± 0.1	1.1 ± 0.2
E1980	S7060	9.4 ± 2.8	19.9 ± 0.5	9.2 ± 0.7
E1980	S7070	3.5 ± 1.5	1.1 ± 0.1	1.4 ± 0.2
E1980	S7080	A	1.9 ± 0.2	1.4 ± 0.3
E1990	S6910	A	1.3 ± 0.1	1.5 ± 0.2
E1990	S6930	A	1.0 ± 0.1	1.2 ± 0.2
E1990	S7030	4.0 ± 1.8	0.7 ± 0.1	0.8 ± 0.3
E1990	S7040	A	1.1 ± 0.1	1.3 ± 0.2
E1990	S7060	A	1.0 ± 0.1	1.1 ± 0.2
E1990	S7070	A	1.0 ± 0.1	1.1 ± 0.2
E1990	S7090	3.0 ± 1.9	3.3 ± 0.2	2.1 ± 0.2
E2000	S7020	A	0.6 ± 0.1	A
E2000	S7040	A	0.6 ± 0.1	0.7 ± 0.2
E2000	S7060	28.5 ± 1.1	1.1 ± 0.1	0.7 ± 0.1
E2000	S7080	A	0.9 ± 0.1	A
E2025	S6347	A	1.2 ± 0.1	1.3 ± 0.2
E2060	S6215	A	1.3 ± 0.1	A
E2076	S6229	A	0.9 ± 0.1	0.4 ± 0.1
E2076	S6238	A	1.0 ± 0.2	0.9 ± 0.2
E2105	S6293	A	0.8 ± 0.1	A
E2114	S6244	A	0.5 ± 0.1	A
E2130	S6281	A	1.4 ± 0.2	1.1 ± 0.2
E2131	S6294	A	1.1 ± 0.1	1.0 ± 0.2
E2142	S6306	A	1.4 ± 0.1	2.1 ± 0.2
E2144	S4715	7.1 ± 5.1	1.0 ± 0.3	1.4 ± 0.3
E2149	S6251	A	1.0 ± 0.1	1.0 ± 0.2
E2170	S4670	A	1.2 ± 0.1	1.4 ± 0.2

TABLE 7 (continued)

Grid Coordinates		Concentrations (pCi/g ±/- 1 sigma)		
E, W	N, S	Uranium-238	Radium-226	Thorium-232
E2170	S4690	A	1.4 ± 0.1	1.6 ± 0.2
E2170	S4710	A	1.2 ± 0.1	0.4 ± 0.3
E2170	S4730	A	1.0 ± 0.1	1.7 ± 0.2
E2170	S4750	A	1.4 ± 0.1	1.6 ± 0.2
E2170	S4770	A	0.6 ± 0.1	1.0 ± 0.2
E2170	S4790	A	0.8 ± 0.1	1.2 ± 0.2
E2180	S4680	A	1.3 ± 0.1	1.6 ± 0.2
E2180	S4700	A	1.2 ± 0.1	0.7 ± 0.1
E2180	S4720	A	1.3 ± 0.2	1.4 ± 0.2
E2180	S4740	A	0.8 ± 0.1	0.5 ± 0.1
E2180	S4760	A	1.0 ± 0.1	1.2 ± 0.2
E2180	S4780	A	1.0 ± 0.1	1.0 ± 0.2
E2180	S4800	A	0.8 ± 0.1	0.8 ± 0.2
E2190	S4670	A	0.9 ± 0.1	1.1 ± 0.2
E2190	S4690	A	0.6 ± 0.1	0.6 ± 0.2
E2190	S4710	A	1.3 ± 0.1	1.0 ± 0.2
E2190	S4730	A	1.2 ± 0.1	1.1 ± 0.2
E2190	S4750	A	0.8 ± 0.1	1.2 ± 0.2
E2190	S4770	A	0.8 ± 0.1	1.1 ± 0.2
E2190	S4790	A	0.9 ± 0.1	1.0 ± 0.2
E2190	S4810	A	0.8 ± 0.1	0.6 ± 0.1
E2200	S4660	A	1.7 ± 0.1	0.7 ± 0.1
E2200	S4680	A	0.7 ± 0.1	A
E2200	S4700	A	0.8 ± 0.1	0.7 ± 0.2
E2200	S4720	A	3.2 ± 0.2	1.2 ± 0.2
E2200	S4740	A	0.8 ± 0.1	1.0 ± 0.2
E2200	S4780	A	1.9 ± 0.3	1.5 ± 0.2
E2200	S4800	A	0.7 ± 0.1	1.0 ± 0.2
E2205	S4800	A	0.5 ± 0.1	1.1 ± 0.2
E2205	S4820	0.6 ± 1.4	1.1 ± 0.1	1.4 ± 0.2
E2205	S4840	2.8 ± 1.6	1.0 ± 0.2	A
E2205	S4860	A	0.9 ± 0.1	0.8 ± 0.1
E2205	S4880	A	0.7 ± 0.1	1.0 ± 0.1
E2210	S4670	A	0.9 ± 0.1	0.6 ± 0.1
E2210	S4690	A	0.7 ± 0.1	A
E2210	S4710	A	1.2 ± 0.1	1.2 ± 0.2
E2210	S4730	A	1.0 ± 0.1	1.1 ± 0.2
E2210	S4750	A	0.8 ± 0.1	0.9 ± 0.1
E2210	S4770	4.5 ± 1.2	1.3 ± 0.1	1.3 ± 0.2
E2210	S4790	A	1.1 ± 0.1	0.9 ± 0.2
E2260	S4760	A	1.1 ± 0.1	1.0 ± 0.2
E2298	S5605	A	5.5 ± 0.3	1.3 ± 0.3
E2300	S5845	A	1.0 ± 0.1	0.6±0.2

TABLE 7 (continued)

Grid Coordinates		Concentrations (pCi/g ±/- 1 sigma)		
E, W	N, S	Uranium-238	Radium-226	Thorium-232
E2315	S5940	A	1.5 ± 0.4	1.2 ± 0.8
E2315	S5947	A	1.7 ± 0.4	A
E2320	S5631	A	5.0 ± 0.3	1.5 ± 0.4
E2321	S5779	3.9 ± 2.0	1.6 ± 0.2	1.6 ± 0.3
E2323	S57I5	A	2.1 ± 0.2	1.8±0.3
E2325	S5635	A	1.7 ± 0.3	1.5 ± 0.3
E2328	S5631	A	2.7 ± 0.2	0.3 ± 0.3
E2336	S5635	A	3.8 ± 0.6	3.9 ± 0.7
E2340	S5605	A	11.9 ± 1.3	0.7± 1.4
E2340	S5615	A	7.5 ± 0.7	2.3 ± 0.8
E2342	S5572	A	2.0±0.6	2.5 ± 0.5
E2343	S5590	A	3.7±0.6	2.1 ± 0.5
E2350	S5620	A	7.5 ± 0.9	1.8 ± 1.7

'A' denotes less than detectable activity

This page intentionally left blank

Verification Data

Excerpt from Verification of 1983 and 1984 Remedial Actions Niagara Falls Storage Site Vicinity Properties, Lewiston, New York, December 1989

This page intentionally left blank

VERIFICATION
OF
1983 AND 1984 REMEDIAL ACTIONS
NIAGARA FALLS STORAGE SITE
VICINITY PROPERTIES
LEWISTON, NEW YORK

Prepared by

S.A. Wical, M.R. Landis, and A.J. Boerner

Environmental Survey and Site Assessment Program
Energy/Environment Systems Division
Oak Ridge Associated Universities
Oak Ridge, TN 37831-0117

Project Staff

J.D. Berger
R.D. Condra
M.A. Edwards
R.C. Gosslee
A.S. Masvidal
J.L. Payne
T.J. Sowell
D.R. Styers
F.A. Templon
C.L. Thurmer
C.R. Weaver

Prepared for

U.S. Department of Energy
as part of the
Formerly Utilized Sites - Remedial Action Program

FINAL REPORT

December 1989

This report is based on work performed under contract number DE-AC05-76OR00033 with the U.S. Department of Energy.

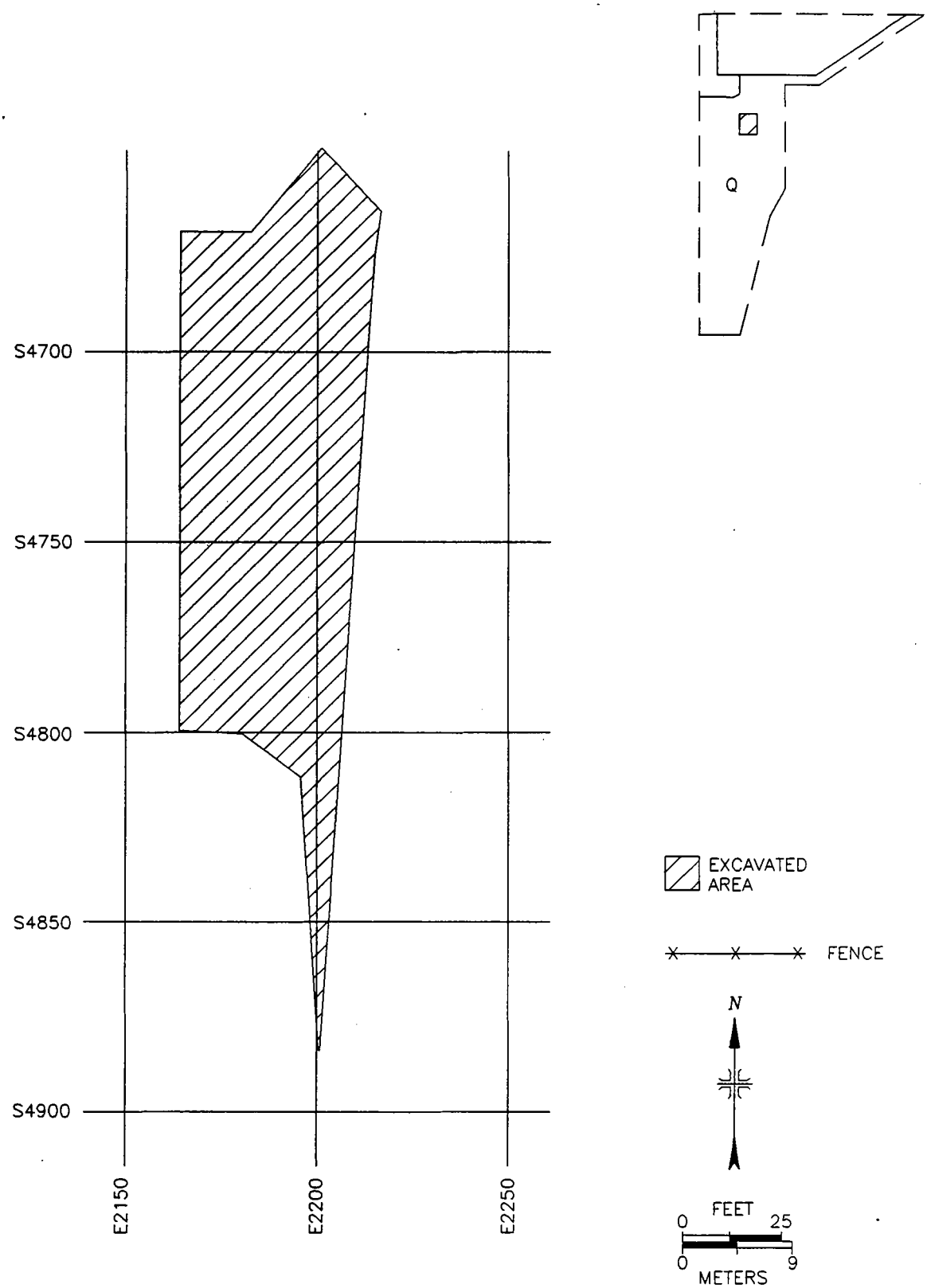

FIGURE 10: Plot Plan of Remediated Section 1 of Vicinity Property Q

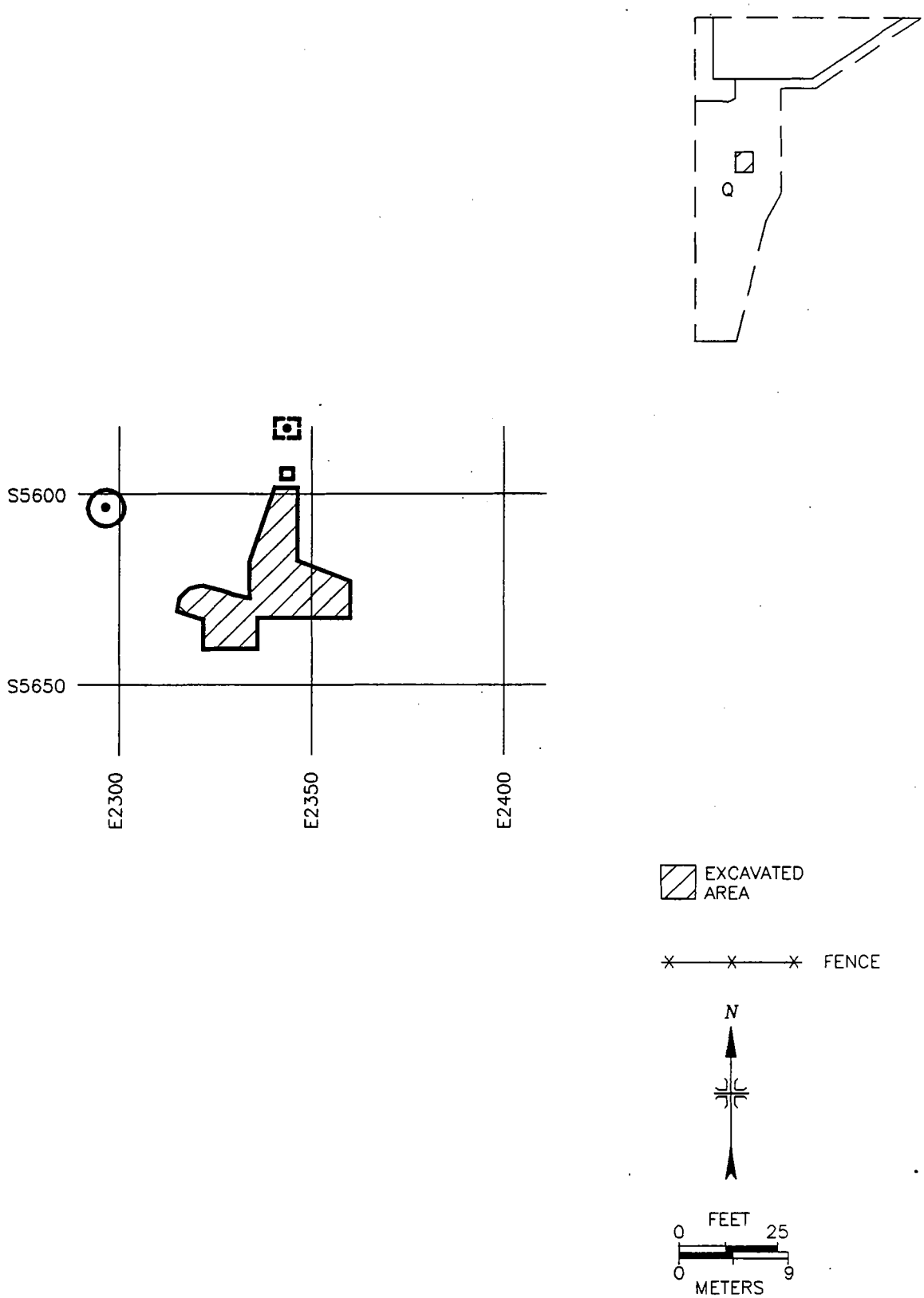

FIGURE 11: Plot Plan of Remediated Section 2 of Vicinity Property Q

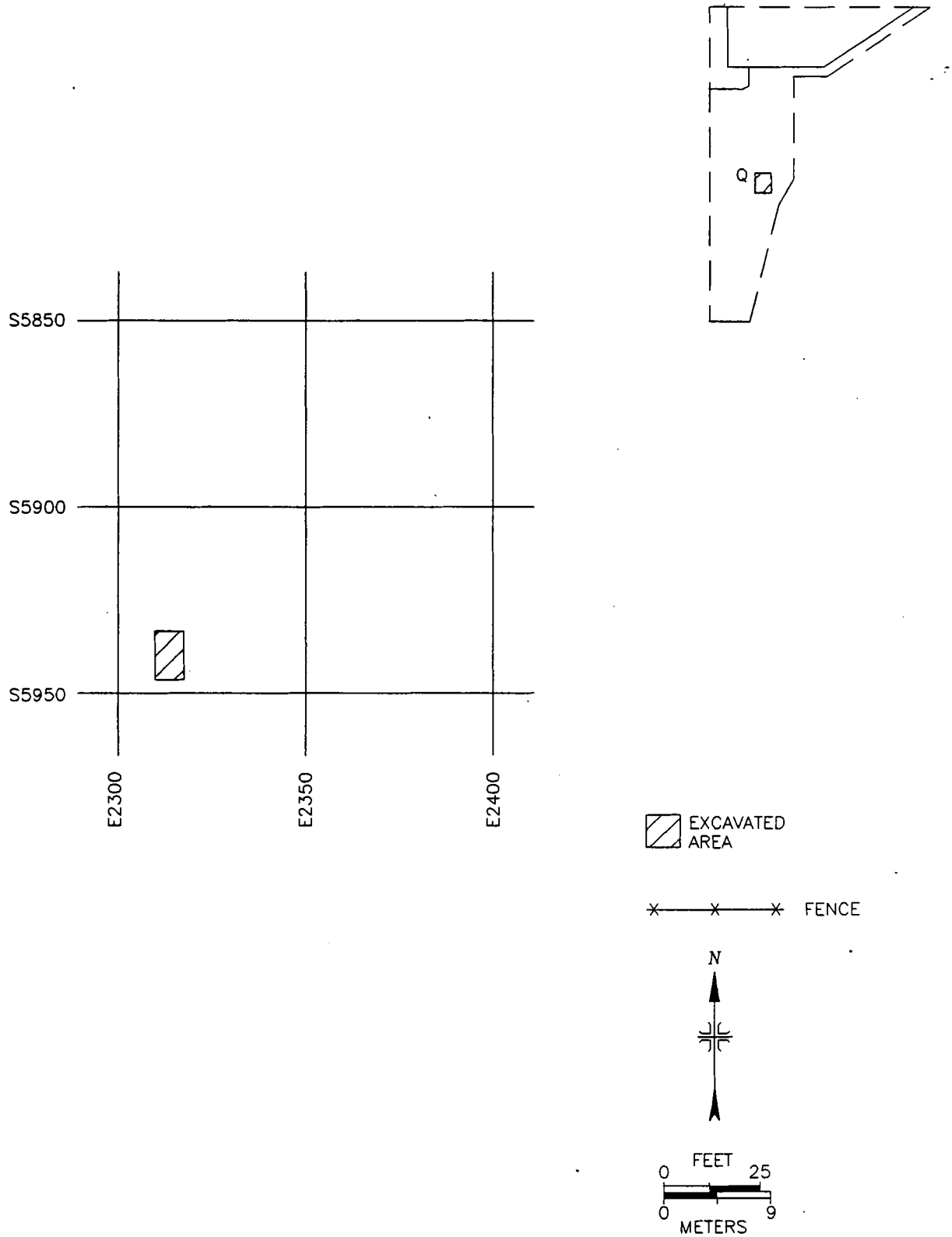

FIGURE 12: Plot Plan of Remediated Section 3 of Vicinity Property Q

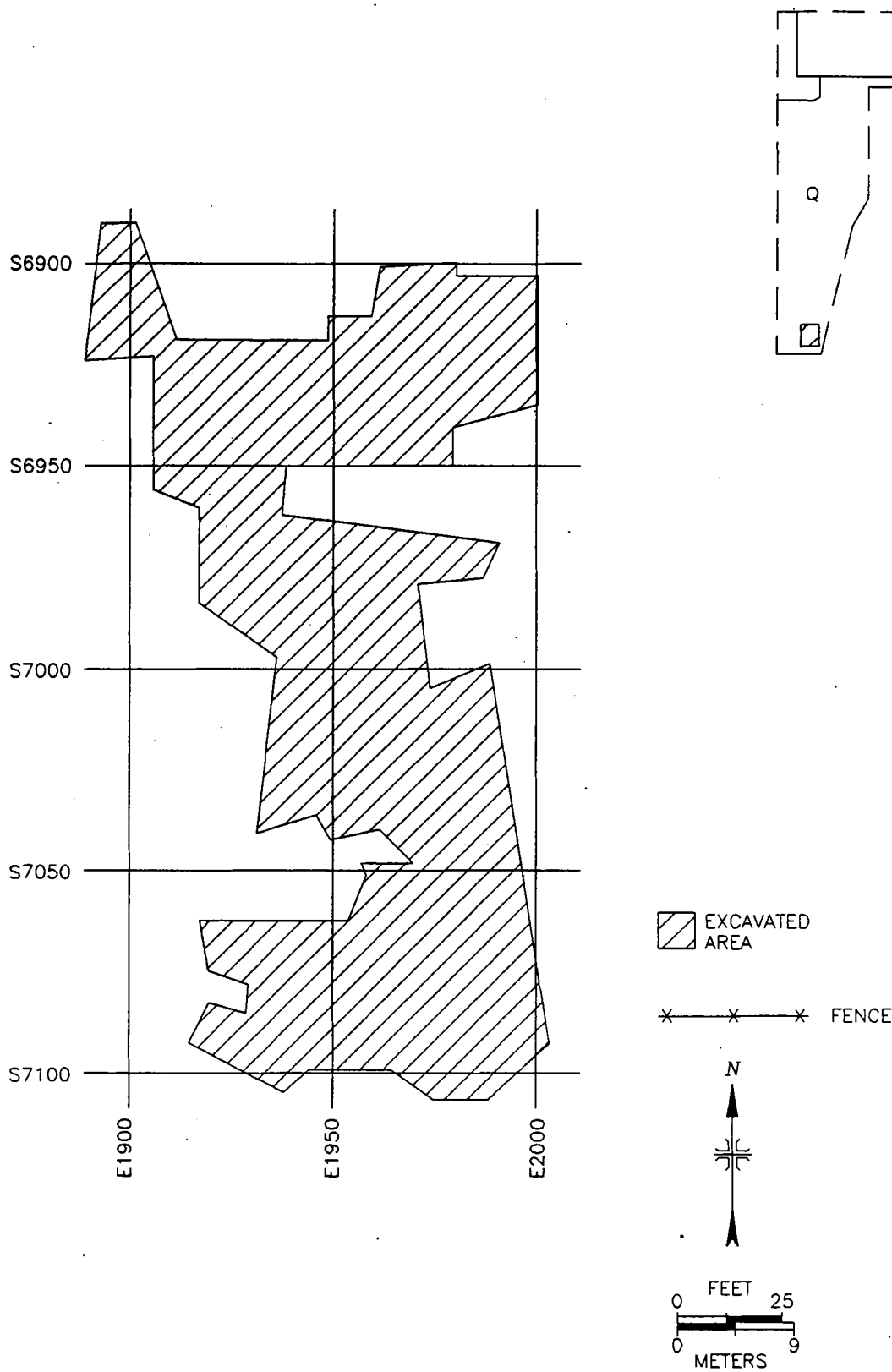

FIGURE 13: Plot Plan of Remediated Section 5 of Vicinity Property Q

TABLE 9

RADIONUCLIDE CONCENTRATIONS IN SOIL SAMPLES
FROM THE VICINITY OF THE OLD WAREHOUSE - PROPERTY Q
NIAGARA FALLS STORAGE SITE VICINITY PROPERTIES
LEWISTON, NEW YORK

Location[a] S	E	Depth (m)	Radionuclide Concentrations (pCi/g) Ra-226	U-238	Th-232
4646	2178	Surface	1.4 ± 0.2[b]	<0.8	0.5 ± 0.5
4665	2192	0.45 - 0.6	0.7 ± 0.2	0.6 ± 0.4	0.5 ± 0.2
4665	2211	Surface	4.0 ± 0.4	0.7 ± 1.3	0.8 ± 0.4
4708	2165	Surface	1.2 ± 0.3	4.5 ± 1.6	1.4 ± 0.5
4708	2177	0.45 - 0.6	1.1 ± 0.2	1.6 ± 1.3	1.8 ± 0.5
4736	2204	0.3 - 0.45	0.6 ± 0.2	0.8 ± 0.4	0.9 ± 0.3
4749	2167	Surface	0.9 ± 0.3	2.4 ± 1.7	0.7 ± 0.3
4749	2213	Surface	0.8 ± 0.2	1.3 ± 1.2	0.9 ± 0.3
4782	2199	0.45 - 0.6	1.0 ± 0.3	2.1 ± 1.4	1.3 ± 0.4
4798	2193	Surface	1.1 ± 0.2	0.9 ± 0.9	1.1 ± 0.3
4833	2213	Surface	0.9 ± 0.2	1.2 ± 1.9	2.1 ± 1.1
4840	2197	Surface	0.6 ± 0.2	<0.4	0.4 ± 0.3

[a]Refer to Figure 10.
[b]Uncertainties represent the 95% confidence levels, based only on counting statistics; additional laboratory uncertainties of ± 6 to 10% have not been propagated into these data.

TABLE 10

RADIONUCLIDE CONCENTRATIONS IN SOIL SAMPLES
FROM AREA ALONG RAILROAD TRACKS - PROPERTY Q
NIAGARA FALLS STORAGE SITE VICINITY PROPERTIES
LEWISTON, NEW YORK

Location[a] S	Location[a] E	Depth (m)	Radionuclide Concentrations (pCi/g) Ra-226	U-238	Th-232
Prior to Additional Remediation					
5612	2345	Surface	47.9 ± 1.5[b]	2.6 ± 3.6	1.5 ± 1.1
5620	2339	0.45 - 0.6	110 ± 3.0	<4.2	2.6 ± 1.8
		0.6 - 0.75	200 ± 3.0	27 ± 25	2.0 ± 2.0
5621	2352	1.2 - 1.4	7.2 ± 0.9	3.1 ± 3.6	1.1 ± 0.7
5632	2314	0.3 - 0.4	77.9 ± 2.1	<2.6	2.0 ± 1.5
Random Samples Collected Following Additional Remediation					
		Surface	1.1 ± 0.3	<0.9	1.2 ± 0.4
		Surface	1.9 ± 0.3	<0.7	0.9 ± 0.4
		0.6 - 0.75	2.0 ± 0.4	<1.1	1.6 ± 0.6
		0.6 - 0.75	4.4 ± 0.7	4.7 ± 3.4	2.5 ± 0.8
		Surface	1.1 ± 0.2	1.2 ± 1.4	1.0 ± 0.3
		Surface	0.8 ± 0.2	<0.7	0.9 ± 0.4

[a]Refer to Figure 11.
[b]Uncertainties represent the 95% confidence levels, based only on counting statistics; additional laboratory uncertainties of ± 6 to 10% have not been propagated into these data.

TABLE 11

RADIONCULIDE CONCENTRATIONS IN SOIL SAMPLES
FROM ACCESS ROAD FOLLOWING REMOVAL OF ASH MATERIAL - PROPERTY Q
NIAGARA FALLS STORAGE SITE VICINITY PROPERTIES
LEWISTON, NEW YORK

Location[a]		Depth	Radionuclide Concentrations (pCi/g)		
S	E	(m)	Ra-226	U-238	Th-232
5938	2315	0.6	3.1 ± 0.5[b]	1.5 ± 2.4	1.7 ± 0.5
5944	2317	0.6	5.0 ± 0.7	1.9 ± 2.5	1.8 ± 0.7
5943	2315	0.9 - 1.1	4.5 ± 0.6	4.1 ± 2.4	1.8 ± 0.6
5948	2316	0.3	2.4 ± 0.5	1.9 ± 2.8	2.0 ± 0.6

[a]Refer to Figure 12.
[b]Uncertainties represent the 95% confidence levels, based only on counting statistics; additional laboratory uncertainties of ± 6 to 10% have not been propagated into these data.

TABLE 12

RADIONUCLIDE CONCENTRATIONS IN SOIL SAMPLES
FROM AREA SOUTH OF MAINTENANCE GARAGE - PROPERTY Q
NIAGARA FALLS STORAGE SITE VICINITY PROPERTIES
LEWISTON, NEW YORK

Location[a]		Radionuclide Concentrations (pCi/g)		
S	E	Ra-226	U-238	Th-232
6902	1988	1.2 ± 0.2[b]	1.0 ± 0.5	0.9 ± 0.3
6904	1894	1.5 ± 0.3	<1.1	1.5 ± 0.5
6918	1934	2.0 ± 0.4	2.9 ± 0.9	1.2 ± 0.7
6993	1922	1.2 ± 0.3	2.2 ± 2.3	0.9 ± 0.6
7044	1924	0.7 ± 0.2	1.7 ± 0.9	1.1 ± 0.4
7062	1992	1.0 ± 0.2	0.5 ± 1.8	0.9 ± 0.4
7065	1933	1.3 ± 0.3	1.7 ± 1.9	1.4 ± 0.6
7097	1955	0.7 ± 0.2	0.6 ± 0.8	0.6 ± 0.3
7099	1921	0.8 ± 0.2	1.0 ± 0.6	1.0 ± 0.4

[a]Refer to Figure 13.
[b]Uncertainties represent the 95% confidence levels, based only on counting statistics; additional laboratory uncertainties of ± 6 to 10% have not been propagated into these data.

This page intentionally left blank