Department of Energy
Oak Ridge Operations
Weldon Spring Site
Remedial Action Project Office
Route 2, Highway 94 South
St. Charles, Missouri 63303

July 25, 1990

ADDRESSEES:

ENGINEERING EVALUATION/COST ANALYSIS FOR THE PROPOSED TREATMENT OF CONTAMINATED WATER IMPOUNDED AT THE WELDON SPRING CHEMICAL PLANT AREA

Enclosed we are pleased to provide you an engineering evaluation/cost analysis (EE/CA) report which has been prepared to support a proposed plan to treat contaminated surface waters impounded at the chemical plant area of the Weldon Spring site, located near Weldon Spring, Missouri.

As you are probably aware, a proposal for final cleanup of the site is being prepared and will be provided to the public next year. In the meantime, a number of interim actions are being carried out in order to minimize actual or potential releases of radioactive or chemical contaminants into the environment. The treatment of the surface waters impounded at the chemical plant area is such an interim action.

Your comments on the proposed action are encouraged and should be sent to:

Mr. Stephen H. McCracken
Project Manager
Weldon Spring Site
U.S. Department of Energy
7295 Highway 94 South
St. Charles, Missouri 63303

A meeting will be held to provide an opportunity for public input to the action which is being proposed. This meeting is scheduled for August 16, 1990, 7:30 p.m., at The Columns Banquet and Conference Center, 711 Fairlane in St. Charles. The closing date for written comments to this proposal is August 27, 1990.

An informational bulletin is also enclosed which summarizes the water treatment proposal. If you wish to obtain additional copies of these documents, please submit a written request to:

Mr. Jim McKee
Community Relations
Weldon Spring Site
7295 Highway 94 South
St. Charles, Missouri 63303

Copies are also available for review at the following public libraries and repositories in St. Charles County.

* Kathryn Linneman Branch
* Spencer Creek Branch
* Kisker Road Branch
* Weldon Spring Site Public Reading Room
* Francis Howell High School

Again, I would like to encourage your comments.

Sincerely,

Stephen H. McCracken
Project Manager
Weldon Spring Site
Remedial Action Project

Enclosure:
As stated

DISTRIBUTION LIST

CONGRESSIONAL:

The Honorable Christopher S. Bond
U. S. Senate
293 Russell Senate Office Building
Washington, DC 20510

The Honorable John Danforth
U. S. Senate
249 Russell Senate Office Building
Washington, DC 20510

The Honorable Harold L. Volkmer
U. S. House of Representatives
2411 Rayburn House Office Building
Washington, DC 20515

~~The Honorable Jack Buechner~~
U.S. House of Representatives
502 Cannon House Office Building
Washington, DC 20515

The Honorable William L. Clay
U. S. House of Representatives
2470 Rayburn House Office Building
Washington, DC 20515

Ms. Jo-Ann Digman
Staff Assistant
The Honorable Christopher S. Bond, Senator
815 Olive Street, Room 220
St. Louis, Missouri 63101

Mr. Rob McDonald
District Administrator
The Honorable John Danforth, Senator
815 Olive Street, Room 228
St. Louis, Missouri 63101

Mr. Lee Viorel
District Administrator
The Honorable Harold L. Volkmer, Congressman
370 Federal Building
Hannibal, MO 63401

Ms. Kay Tanzberger
Special Projects Assistant
The Honorable Jack Buechner, Congressman
13545 Barrett Parkway, Suite 150
Ballwin, Missouri 63021

STATE AND LOCAL ELECTED OFFICIALS

The Honorable Fred Dyer
Missouri State Senator
1025 Sherbrook
St. Charles, Missouri 63301

The Honorable Steven Ehlmann
Missouri House of Representatives
115 South 8th Street
St. Charles, Missouri 63301

The Honorable George Dames
Missouri House of Representatives
623 Highway P
O'Fallon, Missouri 63366

The Honorable Craig Kilby
Missouri House of Representatives
~~56 Freymuth Street~~
Lake St. Louis, Missouri 63367

The Honorable Joseph Ortwerth
Missouri House of Representatives
3916 Jaq Mar Court
St. Peters, Missouri 63376

The Honorable Ted House
Missouri House of Representatives
Post Office Box 1121
St. Charles, Missouri 63302

The Honorable Nancy Becker
Eastern District Commissioner
St. Charles County Courthouse
118 North Second Street
St. Charles, Missouri 63301

The Honorable Gerald Ohlms
Presiding Commissioner
St. Charles County Courthouse
118 North Second Street
St. Charles, Missouri 63301

The Honorable Robert Perkins
Western District Commissioner
St. Charles County Courthouse
118 North Second Street
St. Charles, Missouri 63301

Mr. H.C. Milford
County Executive
St. Louis County
Administration Building, 9th Floor
41 South Central
Clayton, Missouri 63105

The Honorable Edward W. Hajek, Jr.
Mayor, City of Lake St. Louis
1000 Lake St. Louis Boulevard
Suite 16
Lake St. Louis, Missouri 63367

The Honorable Ed Griesenauer
Mayor, City of O'Fallon
138 South Main Street
O'Fallon, Missouri 63366

The Honorable Grace Nichols
Mayor, City of St. Charles
St. Charles City Hall
200 North Second Street
St. Charles, Missouri 63301

The Honorable Vincent C. Schoemehl
Mayor, City of St. Louis
City Hall, Room 200
Market and Tucker Streets
St. Louis, Missouri 63103

The Honorable Thomas W. Brown
Mayor, City of St. Peters
Post Office Box 9
St. Peters, Missouri 63376

Mr. Chalres Blossom
Trustee, Village of Cottleville
5 Upper Dardenne Drive
St. Charles, Missouri 63303

Ms Margaret Culver
Trustee, Village of Weldon Spring
202 Wolfrum Road
St. Charles, Missouri 63303

Mr. Harold W. Edgerton
Chairman of the Board of Trustees
Town of Weldon Spring Heights
14 Weldon Spring Heights
St. Charles, Missouri 63303

The Honorable Lee Barton
Mayor, City of Wentzville
Post Office Box 308
Wentzville, Missouri 63385

FEDERAL OFFICALS:

Mr. Morris Kay
Regional Administrator
U. S. Environmental Protection Agency
Region VII
726 Minnesota Avenue
Kansas City, Kansas 66101

Mr. Robert Morby
Superfund Branch
U. S. Environmental Protection Agency
Region VII
726 Minnesota Avenue
Kansas City, Kansas 66101

Mr. Dan Wall (4 copies)
Superfund Branch
U.S. Environmental Protection Agency
Region VII
726 Minnesota Avenue
Kansas City, Kansas 66101

Mr. Dan Harper
ATSDR
Superfund Branch
U.S. Environmental Protection Agency
Region VII
726 Minnesota Avenue
Kansas City, Kansas 66101

Mr. James Ruttenber
Chronic Diseases Division
Chamblee, Room 5A
Center for Disease Control
1600 Clifton Road, NE
Atlanta, GA 30333

Mr. Steve Iverson, Project Manager
Program and Project Management Division
U.S. Army Corps of Engineers
Kansas City District
601 East 12th Street
Kansas City, Missouri 64106
ATTN: CEMRKED-MD

Mr. Karl J. Daubel
Environmental Coordinator
Weldon Spring Training Area
7301 Highway 94 South
St. Charles, Missouri 63303

Mr. Roy Reed, Chief
Program & Project Management Division
U.S. Army Corps of Engineers
700 Federal Building Room 736
Kanas City, Missouri 64106
Attn: CEMRK-MD

Mr. Scott Murrell, Environmental Coordinator
U.S. Army Engineer Center
Attn: ATZT-DEH-EE
Ft. Leonard Wood, Missouri 65473-5000

Mr. Dan Bauer
~~U.S. Department of Interior~~
Geological Survey, Mail Stop 200
1400 Independence Road
Rolla, Missouri 65401

STATE AND LOCAL OFFICIALS:

Mr. Tracy G. Mehan, III
Director
Missouri Department of Natural Resources
Post Office Box 176
Jefferson City, Missouri 65102

Dr. David E. Bedan (5 copies)
Division of Environmental Quality
Missouri Department of Natural Resources
Post Office Box 176
Jefferson City, Missouri 65102

Mr. William Dieffenbach, Supervisor
Environmental Services
Missouri Department of Conservation
Post Office Box 180
Jefferson City, Missouri 65102-0180

Ms. Lisa DeBruyckere, Manager
August A. Busch Memorial Wildlife Area
Route 2, Box 223
St. Charles, Missouri 63303

Mr. Daryl Roberts, Chief
Bureau of Environmental Epidemiology
Missouri Department of Health
Post Office Box 570
Jefferson City, Missouri 65102

Dr. Wanda McDaniel
Superintendent
Francis Howell School District
7001 Highway 94 South
St. Charles, Missouri 63303

Mr. Roger Dunajcik
Environmental Sanitarian
St. Charles County Health Department
Post Office Box 111
Wentzville, Missouri 63385

Mr. Thomas Aaron
~~St. Charles County Water Department~~
1635 South Highway 94
Defiance, Missouri 63341

Mr. Lynn Bultman, Manager
Missouri Cities Water Company
Post Office Box 1077
St. Charles, Missouri 63302

Mr. Terry Gloriod
Vice President for Production
St. Louis County Water Department
535 North New Ballas Road
St. Louis, Missouri 63141

Mr. Dave Visintainer
City of St. Louis Water Division
Chain of Rocks Plant
10450 Riverview Drive
St. Louis, Missouri 63137

Mr. Ken Hogan
City of St. Louis Water Division
Howard Bend Plant
14769 Olive Boulevard
Chesterfield, Missouri 63017

DOE-HEADQUARTERS:

Mr. James J. Fiore, Director
Division of Decontamination and Decommissioning
Office of Environmental Restoration
EM-423, Room D-430
U.S. Department of Energy
19901 Germantown Road
Germantown, Maryland 20545

Mr. W.E. Murphie, EM-423 (5 copies)
Decontamination and Decommissioning Division
Office of Environmental Restoration
U.S. Department of Energy
19901 Germantown Road
Germantown, Maryland 20545

DOE-ORO:

~~Mr. William Adams, EW-90~~
Acting Assistant Manager for Environmental Restoration &
Waste Management
Oak Ridge Operations Office
U.S. Department of Energy
Post Office Box 2001
Oak Ridge, Tennessee 37831-8541

Mr. Peter J. Gross, SE-31 (3 copies)
Director of Environmental Protection Division
Oak Ridge Operations Office
U.S. Department of Energy
Post Office Box 2001
Oak Ridge, Tennessee 37831-8738

ORAU:

Mr. J.D. Berger
Oak Ridge Associated Universities
230 Warehouse Road
Building 1916-T2
Oak Ridge, Tennessee 37830

MEDIA:

Mr. Brian Flinchpaugh
St. Charles Journal
340 North Main Street
St. Charles, Missouri 63301

Mr. John Angelides
News Department
KMOX-AM/FM
One Memorial Drive
St. Louis, Missouri 63102

Mr. Carlos Ramirez
KMOU-TV
330 N. Main Street
St. Charles, Missouri 63301

Mr. Robert Manor
St Charles Post
105 North Main Street
St Charles, MO 63301

LIBRARIES/REPOSITORIES:

Kisker Road Branch
~~St. Charles City/County Library~~
1000 Kisker Road
St. Charles, Missouri 63303

Spencer Road Branch
St. Charles City/County Library
425 Spencer Road
St. Peters, Missouri 63376

Mr. Robert Shoewe, Principal
Francis Howell High School
7001 Highway 94 South
St. Charles, Missouri 63303

Kathryn M. Linneman Branch
St. Charles City/County Library
2323 Elm Street
St. Charles, Missouri 63301

Administrative Record (2 copies)
MK-Ferguson Company
7295 Highway 94 South
St. Charles, Missouri 63303

OTHER ADDRESSES

Mr. Jack Stein, Director
Environmental Engineering and Site
Services Department
Anheuser Busch Companies, Inc.
One Busch Place
St. Louis, MO 63118

Ms. Meredith Bollmeier
258 Cedar Groves
St. Charles, Missouri 63303

Dr. Michael Garvey
208 Pitman Road
St. Charles, Missouri 63303

Ms. Mary Halliday
St. Charles Countians Against Hazardous Waste
3655 Highway D
Defiance, Missouri 63341

Ms. Linda Hoenig
50 Park Charles North
St. Peters, Missouri 63376

Dr. John C. Soucy, M.D.
President
~~St. Charles Counties Against Hazardous Waste~~
Town of Weldon Spring Heights
4 Weldon Spring Heights
St. Charles, Missouri 63303

Distribution (2 copies)
Office of Scientific and Technical Information
U.S. Department of Energy
Post Office Box 62
Oak Ridge, Tennessee 37830

Mr. Park Owen (2 copies)
Remedial Action Program Information Center
Oak Ridge National Laboratory
Martin-Marietta Energy Systems, Inc.
Post Office Box 2008
Oak Ridge, Tennessee 37831-6050

Mr. Roger Pryor
Missouri Coalition for the Environment
6267 Delmar Boulevard
St. Louis, Missouri 63130

Mr. Stanley M. Remington
Consulting Hydrologist
2524 Westminister Drive
St. Charles, Missouri 63301

Mr. Robert M. Wester, President
R.M. Wester and Associates, Inc.
215 Indacom Drive
St. Peters, Missouri 63376

DOE/OR/21548-106

Engineering Evaluation/Cost Analysis for the Proposed Management of Contaminated Water Impounded at the Weldon Spring Chemical Plant Area

July 1990

U.S. Department of Energy
Oak Ridge Operations Office
Weldon Spring Site Remedial Action Project

DOE/OR/21548-106

Engineering Evaluation/Cost Analysis for the Proposed Management of Contaminated Water Impounded at the Weldon Spring Chemical Plant Area

July 1990

prepared by

M.M. MacDonell, M.L. Maxey, I.E. Joya,* and J.M. Peterson

Environmental Assessment and Information Sciences Division, Argonne National Laboratory

prepared for

U.S. Department of Energy, Oak Ridge Operations Office, Weldon Spring Site Remedial Action Project, under Contract W-31-109-Eng-38

**MK-Environmental Services, San Francisco.*

CONTENTS

NOTATION ix

FOREWORD xi

1 OVERVIEW OF RESPONSE ACTIONS AT THE WELDON SPRING SITE 1

2 SITE BACKGROUND 6

2.1 Site History 6
2.2 Site Description 8
2.2.1 Topography 8
2.2.2 Soils and Geology 10
2.2.3 Surface Water 10
2.2.4 Groundwater 14
2.2.5 Climate and Meteorology 15
2.2.6 Ecology 16
2.2.7 Cultural Resources 16
2.2.8 Land Use and Demography 16
2.3 Existing Analytical Data 17
2.4 Site Conditions That Justify a Removal Action 18
2.4.1 Contaminant Sources and Release Mechanisms 19
2.4.2 Environmental Media 20
2.4.3 Potential Exposure Points 20
2.4.4 Potential Exposure Routes 21
2.4.5 Contaminants of Concern 22

3 REMOVAL ACTION OBJECTIVES 27

3.1 Statutory Limits 27
3.2 Scope and Purpose 27
3.3 Schedule 28
3.4 Compliance with Regulatory Requirements 28

4 REMOVAL ACTION TECHNOLOGIES 30

4.1 Source Control 30
4.1.1 Institutional Controls 31
4.1.2 Removal 31
4.1.3 Treatment 31
4.1.4 Temporary Storage 32
4.1.5 Disposal 32
4.2 Migration Control 33
4.2.1 Institutional Controls 33
4.2.2 Containment/Treatment 33
4.3 Summary of Potentially Applicable Technologies 34

CONTENTS (Cont'd)

4.4 Development of Preliminary Alternatives 34
4.4.1 General Criteria 34
4.4.2 Assembly of Technologies into Alternatives 37

5 ANALYSIS OF REMOVAL ACTION ALTERNATIVES 39

5.1 Evaluation Criteria 39
5.2 Evaluation of Alternatives 39
5.2.1 Alternative 1 39
5.2.2 Alternative 2 40
5.2.3 Alternative 3 40
5.2.4 Alternative 4 41
5.3 Comparative Summary 42
5.4 Preferred Alternative 45

6 POTENTIAL IMPACTS OF IMPLEMENTING THE PREFERRED ALTERNATIVE 46

6.1 Discharge Options 46
6.1.1 Evaluation of Discharge Options 46
6.1.2 Identification of Preferred Discharge Option 50
6.2 Health Impacts 50
6.3 Environmental Impacts 56
6.4 Potential Cumulative Impacts 58
6.4.1 Health Impacts 58
6.4.2 Environmental Impacts 61

7 DESIGN BASIS FOR THE TREATMENT PLANT 63

8 REFERENCES 72

APPENDIX A: Characterization Results for the Chemical Plant Area 77

APPENDIX B: Screening of Treatment Technologies for Applicability to the Proposed Action 123

APPENDIX C: Treatment Technologies and Systems That Are Applicable to the Proposed Action 151

APPENDIX D: Regulatory Requirements Potentially Applicable to the Proposed Action 171

APPENDIX E: English/Metric - Metric/English Equivalents 197

FIGURES

1 Location of the Weldon Spring Site 2

2 Major Environmental Compliance Activities and Related Documents for the Weldon Spring Site Remedial Action Project 3

3 Map of the Weldon Spring Site and Vicinity 7

4 Surface Water Features at the Weldon Spring Site 9

5 Topographic Map of the Weldon Spring Area 11

6 Generalized Stratigraphy in the Vicinity of the Chemical Plant Area 12

7 Location of the Proposed Discharges for the Two Water Treatment Plants 60

8 Location and Layout of the Proposed Water Treatment Plant 64

A.1 Uranium-238 Radioactive Decay Series 81

A.2 Thorium-232 Radioactive Decay Series 82

A.3 Locations of Groundwater Monitoring Wells at the Chemical Plant Area 94

A.4 Location of the Southeast Drainage 108

A.5 Springs and Seeps in the Vicinity of the Weldon Spring Site 109

A.6 Surface Water Outfall Sampling Locations and Flow Directions at the Chemical Plant Area 110

A.7 Relationships of Surface Water and Groundwater in the Southeast Drainage 112

A.8 Losing Stream Segments in the Southeast Drainage 113

A.9 Locations of Building 302, Railroad Ties, and the Proposed Material Staging Area 116

C.1 Unit Operations and Process Flow Schematic for the Nondistillation Options 159

FIGURES (Cont'd)

C.2 Unit Operations and Process Flow Schematic for the Distillation Option 160

C.3 Preferred Treatment System for the Impounded Surface Waters at the Chemical Plant Area 168

TABLES

1 General Information for the Raffinate Pits 17

2 Summary of General Response Technology Screening: Source Control 35

3 Summary of General Response Technology Screening: Migration Control 37

4 Evaluation of Removal Action Alternatives 43

5 Estimated Incremental Radiation Doses and Incremental Risks 55

6 Primary Contaminants Requiring Treatment to Reduce Concentrations to Potential Effluent Targets 65

7 Secondary Contaminants That May Also Require Treatment 66

8 Major Influents to the Treatment Plant 67

A.1 Contaminants in the Raffinate Pit Waters with Highest Concentrations Exceeding Potential Effluent Targets 80

A.2 Radiological Data from Water Sampling in the Four Raffinate Pits 83

A.3 Characterization Results from Water Sampling in Frog Pond and Ash Pond 84

A.4 Characterization of Other Potential Influents to the Proposed Treatment Plant 86

A.5 Comparison of Sludge and Surface Water Sampling Results from Pit 4 88

TABLES (Cont'd)

A.6 Comparison of Decanted Water from Pit Sludge Samples with Highest Historical Surface Water Measurements 89

A.7 Water Quality of Major Potential Influents to the Proposed Water Treatment Plant 90

A.8 Characterization Results from Groundwater Sampling 96

A.9 Characterization Results for Radionuclides in the Raffinate Pit Sludges 100

A.10 Characterization Results for Anions in the Raffinate Pit Sludges 102

A.11 Characterization Results for Metals in the Raffinate Pit Sludges 103

A.12 Soil Characterization Results in the Vicinity of the Proposed Water Treatment Plant 106

A.13 Radiological and Chemical Characterization of Surface Water Discharges and Springs in the Southeast Drainage 111

A.14 Radioactive Soil Contamination in the Southeast Drainage 114

B.1 Potential Technologies for Treatment of the Surface Waters at the Chemical Plant Area 126

C.1 Treatment System Options and Component Technologies 155

C.2 Removal of Contaminants Targeted by Staged Process Technologies 156

C.3 Estimated Plant Areas, Energy Consumption, and Waste Volumes for Treatment System Options 165

D.1 Potential Location-Specific Requirements 175

D.2 Potential Contaminant-Specific Requirements 177

D.3 Potential Action-Specific Requirements 194

TABLES (Cont'd)

E.1 English/Metric Equivalents 199

E.2 Metric/English Equivalents 199

NOTATION

The following is a list of the acronyms, initialisms, and abbreviations (including units of measure) used in this document. Acronyms used in tables only are defined in the respective tables.

ACRONYMS, INITIALISMS, AND ABBREVIATIONS

AEC	U.S. Atomic Energy Commission
ALARA	as low as reasonably achievable
ANL	Argonne National Laboratory
ARAR	applicable or relevant and appropriate requirement
CERCLA	Comprehensive Environmental Response, Compensation, and Liability Act of 1980, as amended
CFR	Code of Federal Regulations
CSR	Code of State Regulations
DNT	dinitrotoluene
DOE	U.S. Department of Energy
EE/CA	engineering evaluation/cost analysis
EIS	environmental impact statement
EPA	U.S. Environmental Protection Agency
FR	Federal Register
FS	feasibility study
GAC	granular activated carbon
MSA	material staging area
MSL	mean sea level
NCP	National Oil and Hazardous Substances Pollution Contingency Plan
NEPA	National Environmental Policy Act of 1969, as amended
NPDES	National Pollutant Discharge Elimination System
NPL	National Priorities List
O&M	operation and maintenance
PAC	powdered activated carbon
PCB	polychlorinated biphenyl
pH	negative logarithm of the hydrogen ion concentration
PL	Public Law
RI	remedial investigation
RSMo.	Revised Statutes of Missouri
SARA	Superfund Amendments and Reauthorization Act of 1986
SFMP	Surplus Facilities Management Program
Stat.	Statute
TBC	to-be-considered (requirements)
TNT	trinitrotoluene
TSA	temporary storage area
USC	United States Code

UNITS OF MEASURE

°C	degrees Celsius
°F	degrees Fahrenheit
Ci	curie(s)
cm	centimeter(s)
cm^2	square centimeter(s)
cm^3	cubic centimeter(s)
d	day(s)
dBA	decibel(s), A-weighted
ft	foot (feet)
ft^2	square foot (feet)
ft^3	cubic foot (feet)
g	gram(s)
gal	gallon(s)
gpd	gallon(s) per day
gpm	gallon(s) per minute
h	hour(s)
ha	hectare(s)
in.	inch(es)
kg	kilogram(s)
km	kilometer(s)
kPa	kilopascal(s)
kWh	kilowatt hour(s)
L	liter(s)
lb	pound(s)
μCi	microcurie(s)
μg	microgram(s)
μm	micrometer(s)
μR	microroentgen(s)
m	meter(s)
m^2	square meter(s)
m^3	cubic meter(s)
mCi	millicurie(s)
MeV	million electron volts
mg	milligram(s)
mi	mile(s)
mL	milliliter(s)
MPa	megapascal(s)
mph	mile(s) per hour
mR	milliroentgen(s)
mrem	millirem(s)
pCi	picocurie(s)
ppb	part(s) per billion
ppm	part(s) per million
psi	pound(s) per square inch
rem	roentgen equivalent man
s	second(s)
t	metric ton(s)
yd	yard(s)
yd^2	square yard(s)
yd^3	cubic yard(s)
yr	year(s)

FOREWORD

This engineering evaluation/cost analysis (EE/CA) report has been prepared to support the proposed removal action for managing contaminated surface waters impounded at the chemical plant area of the Weldon Spring site, located near Weldon Spring, Missouri. The U.S. Department of Energy is responsible for cleanup activities at the site under its Surplus Facilities Management Program (SFMP). The major goals of SFMP are to eliminate potential hazards to human health and the environment that are associated with contamination at SFMP sites and to make surplus real property available for other uses, to the extent possible.

This EE/CA report was prepared to document the proposed removal action because the action is a non-time-critical response (i.e., it need not be implemented within 6 months). This documentation process is identified in guidance of the U.S. Environmental Protection Agency (EPA) that addresses removal actions at sites subject to the Comprehensive Environmental Response, Compensation, and Liability Act (CERCLA) of 1980, as amended by the Superfund Amendments and Reauthorization Act of 1986. Actions at the Weldon Spring site are subject to CERCLA requirements because the site is listed on EPA's National Priorities List.

The objectives of this EE/CA report are to (1) identify the cleanup as a removal action, (2) document the selection of a response that will mitigate the potential release of radioactive or chemical contaminants from the impounded waters into the nearby environment, and (3) address environmental impacts associated with the proposed action. Pursuant to the evaluation of potential alternatives in this report, it is proposed that the water be pumped from the impoundments to a newly constructed treatment plant for contaminant removal. Treated water would then be released to the Missouri River in compliance with a permit issued to DOE by the Missouri Department of Natural Resources. This action is consistent with and would support comprehensive response actions being planned for the Weldon Spring site.

1 OVERVIEW OF RESPONSE ACTIONS AT THE WELDON SPRING SITE

The U.S. Department of Energy (DOE) is responsible for conducting response actions at the Weldon Spring site under its Surplus Facilities Management Program (SFMP). The site is located in St. Charles County, Missouri, about 48 km (30 mi) west of St. Louis (Figure 1). The Weldon Spring site became contaminated as a result of processing and disposal activities that took place from the 1940s through 1960s, and it is listed on the National Priorities List (NPL) of the U.S. Environmental Protection Agency (EPA). The site consists of two noncontiguous areas: (1) the chemical plant area, which includes four raffinate pits and two small ponds, and (2) the quarry. The quarry is located about 6.4 km (4 mi) southwest of the chemical plant area and about 1.6 km (1 mi) northwest of an alluvial well field that constitutes a major source of potable water for St. Charles County. Various wastes were disposed of in the quarry from 1942 to 1969; wastes therein consist of contaminated soils and sediments, rubble, metal debris, and equipment.

This engineering evaluation/cost analysis (EE/CA) report has been prepared in accordance with the requirements of the Comprehensive Environmental Response, Compensation, and Liability Act (CERCLA), as amended, to document the proposed management of surface waters impounded at the chemical plant area as an expedited response action for the Weldon Spring Site Remedial Action Project. Because activities at the site are also conducted in compliance with the National Environmental Policy Act (NEPA), the environmental assessment incorporated into this report will support a NEPA determination for the proposed action.

The role of this action as an expedited response action in the comprehensive remediation strategy for the project is illustrated in Figure 2. Cleanup of the Weldon Spring site consists of several components, as presented in the project work plan (see Peterson et al. 1988). The overall remedial action for the site will be addressed in a remedial investigation/feasibility study (RI/FS) report that will be modified to incorporate the requirements of an environmental impact statement (EIS) under NEPA. This report, termed an RI/FS-EIS, will evaluate alternatives for remediation of the chemical plant area and disposal of wastes generated by remediating the entire site. Various interim actions (both expedited response actions and interim remedial actions) will be performed prior to completion of the RI/FS-EIS in order to mitigate actual or potential releases of radioactive or chemical contaminants into the environment; management of the surface waters impounded at the chemical plant area is such an action. The action being proposed in this EE/CA does not address final disposal decisions (e.g., for process wastes); these decisions will be addressed in the RI/FS-EIS that is currently in preparation.

This EE/CA is being prepared to support a response to potential risks associated with contaminated surface waters impounded at the chemical plant area of the Weldon Spring site. Wildlife are currently exposed to the surface waters at the chemical plant area, and contaminants have migrated to (1) underlying groundwater on-site via seepage and (2) surface waters off-site via runoff. Although no drinking water wells have yet been affected by contaminant migration, potential human exposure could occur in the

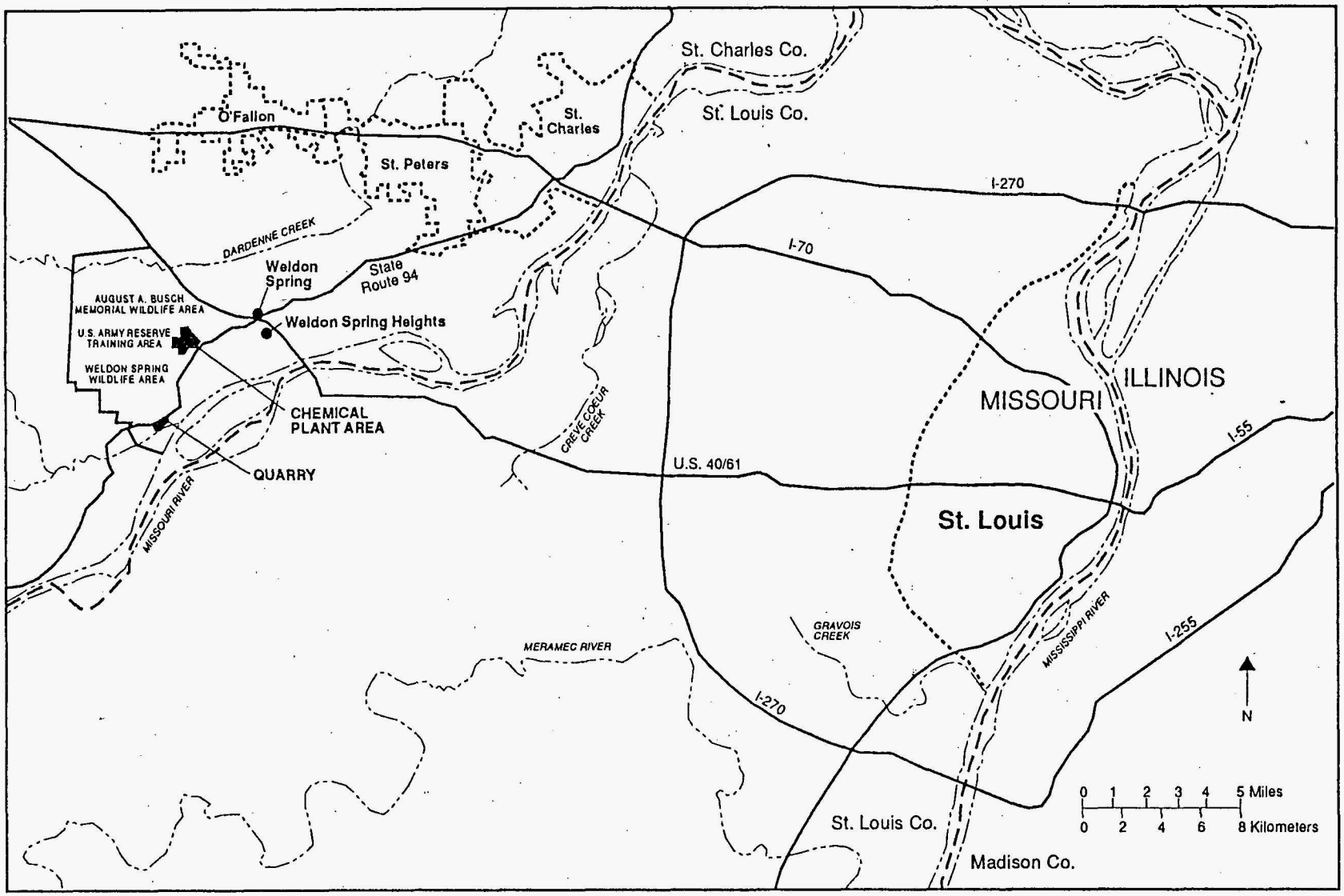

FIGURE 1 Location of the Weldon Spring Site

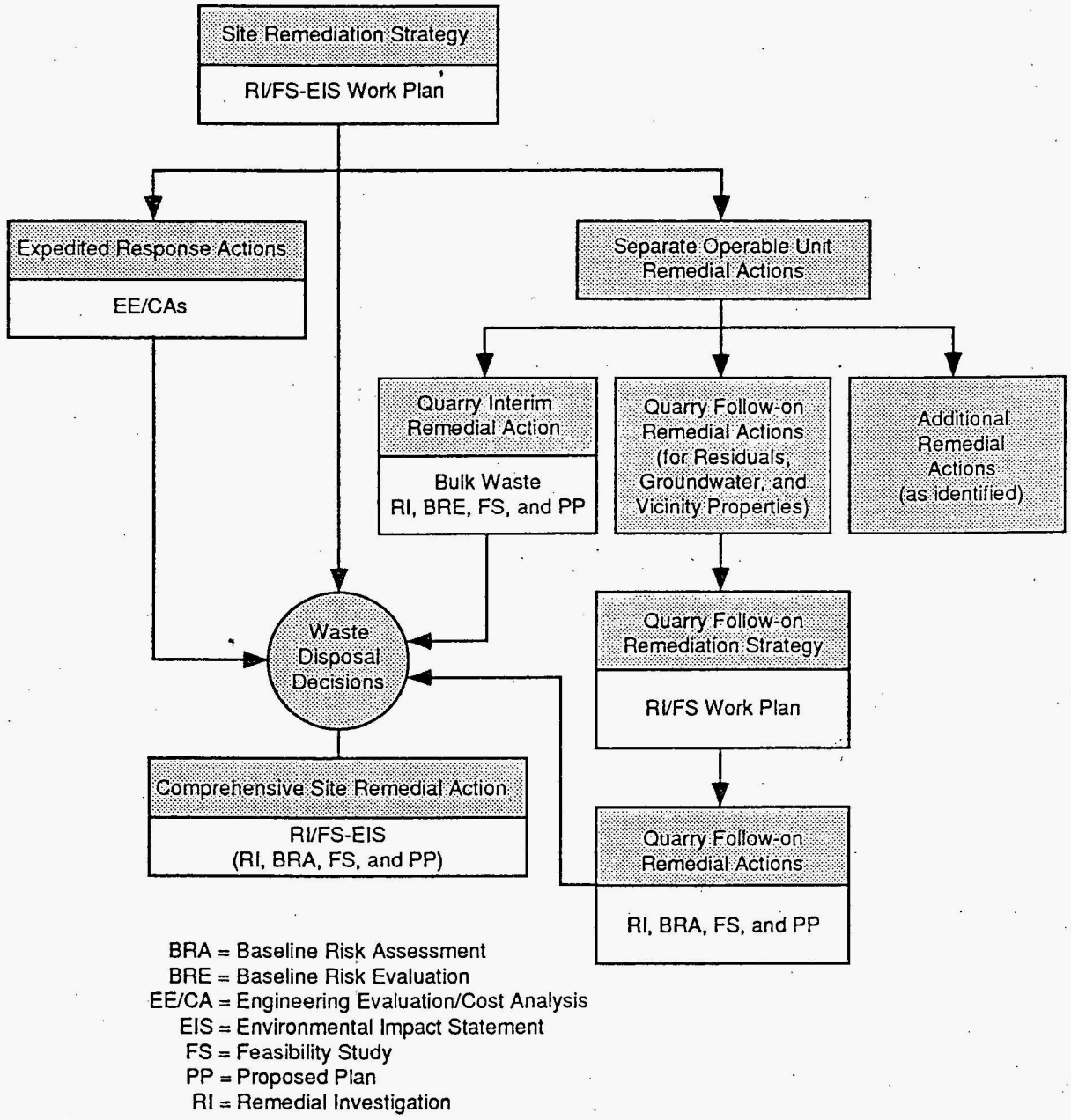

FIGURE 2 Major Environmental Compliance Activities and Related Documents for the Weldon Spring Site Remedial Action Project

future if a timely response is not implemented. Based on the evaluation presented in this EE/CA, the preferred alternative for managing the impounded surface waters has been identified as construction and operation of a water treatment system at the chemical plant area (see Section 5.4). If this alternative is implemented pursuant to the EE/CA process, the schedule would be as defined in Section 3.3, i.e., construction would begin in 1991 and water treatment would begin in 1992. To identify the role of this proposed activity in the progression of environmental compliance activities that have been conducted for the Weldon Spring Site Remedial Action Project, a brief overview of other major actions that have been documented for the project follows.

The first major action planned for the project was an expedited response action to address the management of contaminated surface water in the quarry; this action has been documented in a separate EE/CA (MacDonell et al. 1989). The action was proposed to respond to a potential threat to the nearby drinking water supply from contaminants migrating into the local groundwater, as indicated by monitoring results. The quarry pond, which is contaminated as a result of contact with the wastes in the quarry, provides a gradient for this migration because the pond surface is higher than the nearby groundwater table. The alternative selected as a result of the EE/CA process, which included public review and comment, was to treat the pond water in a facility constructed adjacent to the quarry and release the treated water to the Missouri River in compliance with a permit issued to DOE by the Missouri Department of Natural Resources. Construction for this activity is expected to be initiated in 1990, and water treatment would begin in 1991. In addition to mitigating a potential threat to human health and the environment at the quarry, this action supports the next stage of quarry cleanup, which is described as follows.

The second major interim action proposed for the project addresses the management of bulk wastes in the quarry; a focused RI/FS has been prepared to support this action. The RI/FS package includes (1) an RI, which presents information characterizing the quarry and the wastes therein (MK-Ferguson Company and Jacobs Engineering Group 1989d); (2) a baseline risk evaluation, which assesses potential exposures to these wastes in the short term under current conditions (Haroun et al. 1990); and (3) an FS, which evaluates potential alternatives for managing the bulk wastes (Argonne National Laboratory [ANL] 1990). The quarry wastes constitute the source of contaminants migrating into the air and underlying groundwater. The alternative selected as a result of the RI/FS process, which included public review and comment, was to excavate the bulk wastes from the quarry and transport them to the chemical plant area of the Weldon Spring site, pending disposal decisions that will be addressed in the RI/FS-EIS being prepared for the project. Removal of the quarry pond water will facilitate the excavation of these wastes. Following excavation, the wastes will be placed in controlled storage in an engineered facility constructed adjacent to the raffinate pits at the chemical plant area; this temporary storage facility will contain retention ponds to collect water from the facility (e.g., precipitation runoff and any leachate generated) during the projected 3- to 6-year storage period. Construction for this activity is expected to begin in 1991; waste excavation is expected to be initiated in 1992 and to be completed within 2 years.

Similar to the relationship of the quarry pond removal to subsequent bulk waste excavation activities planned for the quarry, the action currently proposed for managing the surface waters impounded at the chemical plant area would support other response actions being planned for the Weldon Spring Site Remedial Action Project. That is, if the preferred alternative is selected pursuant to this EE/CA process, the treatment plant would be available to treat water collected at the temporary storage area for the quarry wastes. In addition, the plant could be used to treat other contaminated water collected as a result of planned remedial action activities, which will be identified in upcoming documentation (e.g., decontaminating building materials and dewatering raffinate pit sludges).

Environmental documentation for additional response actions at the Weldon Spring site will be prepared as those actions are defined (see Figure 2). The activities and environmental compliance documents for the Weldon Spring Site Remedial Action Project are developed in coordination with EPA Region VII and the state of Missouri. The compliance documents are also issued for public comment, and public involvement is an important factor in the decision-making process for site remediation.

2 SITE BACKGROUND

The chemical plant area of the Weldon Spring site, which includes four raffinate pits and two small ponds, is about 3.2 km (2 mi) southwest of the junction of Missouri (State) Route 94 and U.S. Route 40/61. The chemical plant area is about 6.4 km (4 mi) north-northeast of the quarry and about 3.2 km (2 mi) southwest of the city of Weldon Spring (Figure 3). Both areas are accessible from State Route 94 and are fenced and closed to the public. In addition to the surface water impoundments, the chemical plant area contains a number of buildings and support structures; the remainder of the area is covered with gravel, paved surfaces, and vegetation (predominantly grasses, shrubs, and small trees). The August A. Busch Memorial Wildlife Area is located to the north, the Weldon Spring Wildlife Area to the south and east, and the U.S. Army Reserve and National Guard Training Area to the west of the chemical plant area.

A general discussion of site history is provided in Section 2.1, and the chemical plant area is briefly described in Section 2.2. Information on the impounded surface waters is presented in Section 2.3 and Appendix A. The site conditions that justify the removal action proposed in this EE/CA are discussed in Section 2.4.

2.1 SITE HISTORY

In April 1941, the U.S. Department of the Army acquired about 7,000 ha (17,000 acres) of land in St. Charles County, Missouri, to construct the Weldon Spring Ordnance Works. From November 1941 through January 1944, the Atlas Powder Company operated the ordnance works for the Army to produce trinitrotoluene (TNT) and dinitrotoluene (DNT) explosives. The ordnance works began operating again in 1945 but was closed and declared surplus to Army needs in April 1946. By 1949, all but about 810 ha (2,000 acres) had been transferred to the state of Missouri (August A. Busch Memorial Wildlife Area) and the University of Missouri (agricultural land). Much of the land transferred to the University of Missouri was subsequently developed into the Weldon Spring Wildlife Area. Except for several small parcels transferred to St. Charles County, the remaining property became the chemical plant area of the Weldon Spring site and the adjacent U.S. Army Reserve and National Guard Training Area.

The U.S. Atomic Energy Commission (AEC, a predecessor of the DOE) acquired 83 ha (205 acres) of the former ordnance works property from the Army by permit in May 1955, and the property transfer was approved by Congress in August 1956. An additional 6 ha (15 acres) was later transferred to the AEC for expansion of waste storage capacity. The AEC constructed a feed materials plant -- now referred to as the chemical plant -- on the property for processing uranium and thorium ore concentrates. The quarry, which had been used by the Army since the early 1940s for disposal of chemically contaminated materials, was transferred to the AEC in July 1960 for use as a disposal area for radioactively contaminated materials (Niedermeyer 1976).

The feed materials plant was operated for the AEC by the Uranium Division of Mallinckrodt Chemical Works from 1957 to 1966. Between 1958 and 1964, four raffinate pits were constructed in the southwest portion of the chemical plant area to contain

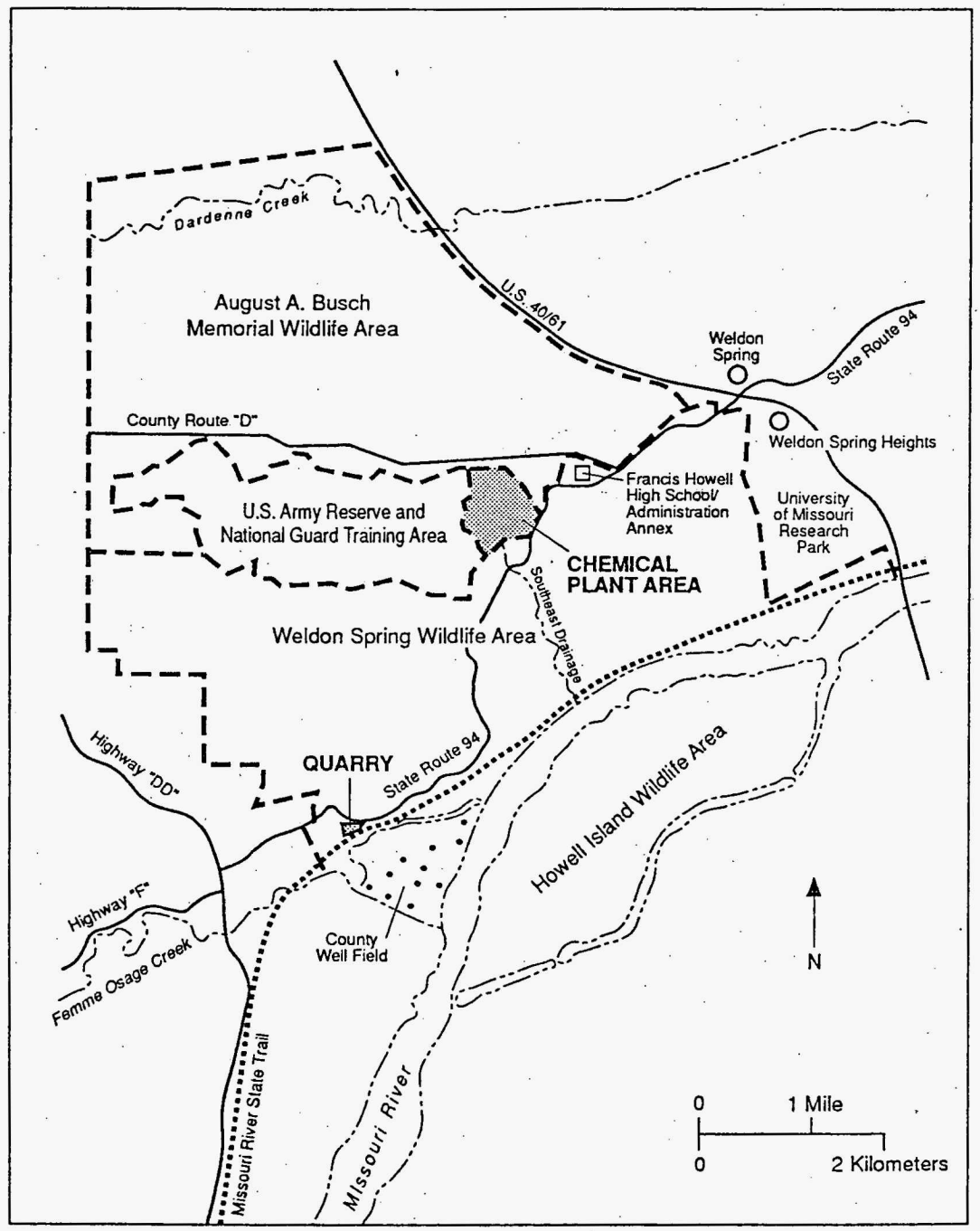

FIGURE 3 Map of the Weldon Spring Site and Vicinity

process wastes from the plant. During operations, uranium ore concentrates were processed to produce uranium trioxide, uranium tetrafluoride, and uranium metal; an average of 14,000 t (16,000 tons) of uranium materials was processed per year. A limited amount of thorium ore concentrates was also processed at the plant. These processes generated several chemical and radioactive waste streams, which were slurried to the raffinate pits. The solids settled to the bottom of the pits, and the supernatant liquids were decanted to the plant process sewer that drained off-site down the Southeast Drainage, a natural channel, to the Missouri River.

In 1967, the Army reacquired the chemical plant following closure by the AEC and began converting the facility for herbicide production. The plant buildings were partially decontaminated, and some equipment was dismantled. Contaminated rubble and equipment from some buildings were placed in the quarry; a limited amount of this debris was also placed in raffinate pit 4. In 1969, prior to becoming operational, the herbicide project was canceled. Since that time, the plant has remained essentially unused and in caretaker status.

In 1971, the Army returned the 21-ha (51-acre) portion of the property containing the raffinate pits to the AEC but retained control of the rest of the chemical plant area. As successor to the AEC, DOE assumed responsibility for the raffinate pits. During 1984, the Army repaired several of the buildings; decontaminated some of the floors, walls, and ceilings; and removed some contaminated equipment to areas outside of the buildings. In May 1985, DOE designated the control and decontamination of the Weldon Spring site as a major federal project under SFMP. In May 1988, DOE redesignated the project as a major system acquisition.

On October 1, 1985, custody of the Army portion of the chemical plant area was transferred to DOE. On October 15, 1985, the EPA proposed to include the Weldon Spring quarry on its NPL; this listing occurred on July 22, 1987 (EPA 1987). On June 24, 1988, the EPA proposed to expand the listing to include the chemical plant area. This proposal was finalized on March 13, 1989 (EPA 1989a), and the expanded site was placed on the NPL under the name "Weldon Spring Quarry/Plant/Pits (USDOE/Army)." The balance of the former Weldon Spring Ordnance Works property -- which is adjacent to the DOE portion and for which the Army has responsibility -- was proposed for separate NPL listing on July 14, 1989 (EPA 1989b). This listing was finalized under the name "Weldon Spring Former Army Ordnance Works" on February 21, 1990 (EPA 1990a).

2.2 SITE DESCRIPTION

2.2.1 Topography

The chemical plant area straddles the watershed divide that separates the Mississippi and Missouri river valleys; the drainage divide between the two rivers transects the east-southeast portion of the chemical plant area (Figure 4). Surface runoff to the south of the divide flows into the Missouri River (Bechtel National 1987); runoff from the northern and western portions of the site trends northward to tributaries of Schote Creek, ultimately draining to the Mississippi River.

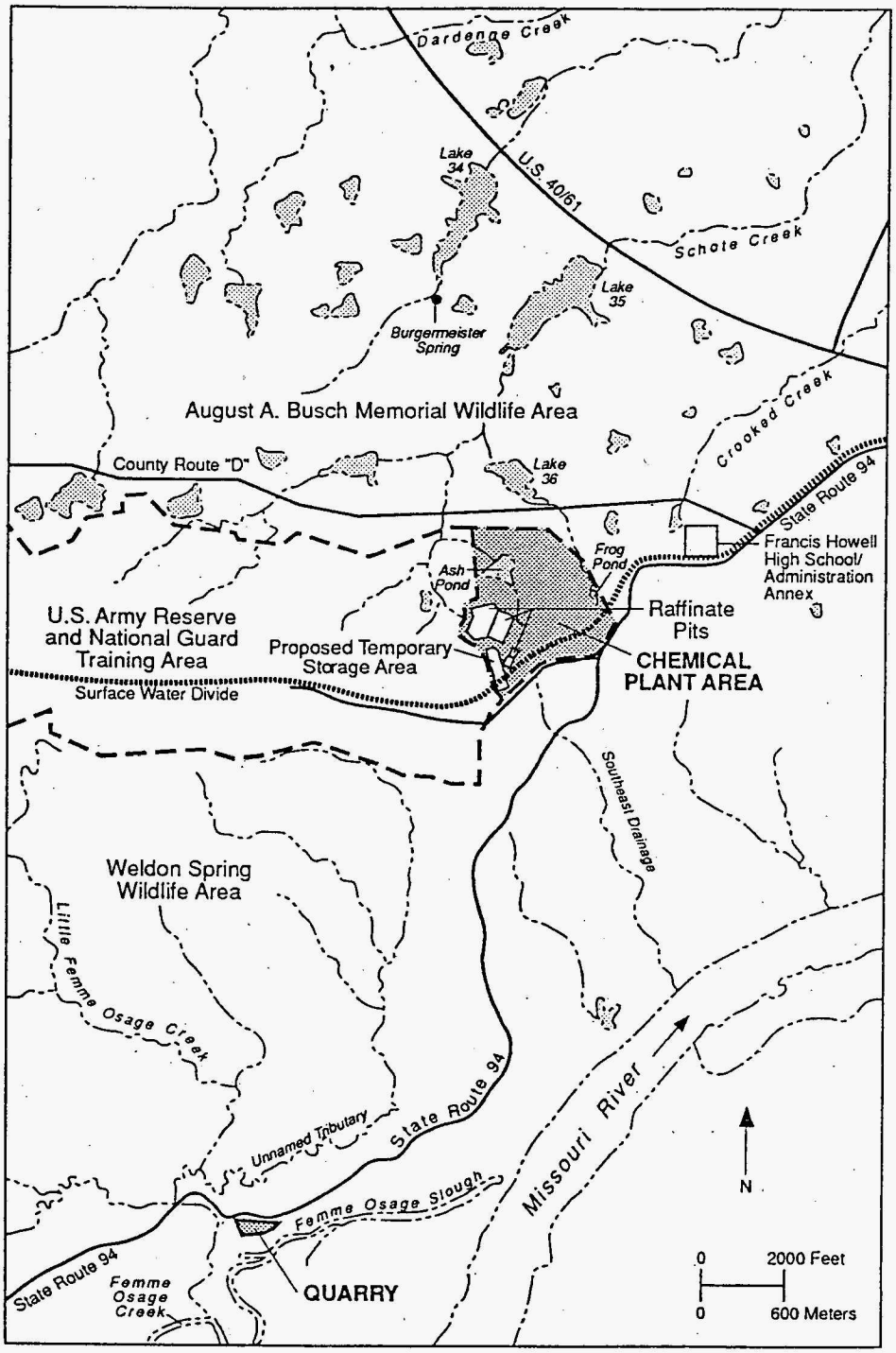

FIGURE 4 Surface Water Features at the Weldon Spring Site (Source: Modified from ANL 1990)

The land to the north of the chemical plant area has gently rolling topography, whereas the terrain to the south is heavily wooded and characterized by deep ravines (Figure 5). Elevations at the chemical plant area range from about 185 m (607 ft) mean sea level (MSL) near the northern boundary to about 205 m (673 ft) MSL near the southern boundary. With the exception of the embankments built around the raffinate pits, the land surface within the chemical plant area is gently sloping.

2.2.2 Soils and Geology

The predominant soil type in the chemical plant area is the Harvester-Urban Complex (U.S. Department of Agriculture 1982). This soil is primarily composed of silty loess materials that have a moderate permeability and high water content. The Harvester group has been transported and shaped as a result of earth-moving activities at the chemical plant; the Urban group has been covered by roads, parking lots, buildings, and other surface features.

The chemical plant area is located on the gently dipping east flank of the northwest-trending House Springs-Eureka anticline (DOE 1987). The bedrock at the chemical plant area is overlain by topsoil, modified loess (clayey silt), clay (Ferrelview Formation), clay till, basal till, and cherty clay (residuum produced by weathering) (Bechtel National 1984). The Burlington-Keokuk Limestone Formation underlies the unconsolidated materials and is about 40 to 50 m (140 to 160 ft) thick at the chemical plant area; the typical thickness of this unit in the vicinity of the chemical plant area ranges from about 30 to 60 m (100 to 200 ft) (see Figure 6). This limestone can be divided into two units based on lithology and degree of weathering. The upper portion -- referred to as the weathered zone -- is moderately to highly fractured, exhibits considerable iron-oxide staining due to weathering, and ranges in thickness from about 3 m (9 ft) to about 15 m (50 ft). The lower portion -- referred to as the competent zone -- shows a general lack of iron oxide staining (with unaltered pyrite on some fracture surfaces), fewer fractures and vugs, and significantly lower horizontal and vertical fracture densities than the weathered zone. The contact between the upper weathered zone and the lower competent zone is gradational (MK-Ferguson Company and Jacobs Engineering Group 1990a, 1990b).

2.2.3 Surface Water

The surface water impoundments at the chemical plant area include the four raffinate pits, Frog Pond, and Ash Pond (Figure 4). The raffinate pits were constructed by excavating into the existing clay soils and using the soils for construction of dikes around each pit. Pits 1 and 2 were constructed adjacent to each other on nearly level terrain; each has a surface area of about 0.5 ha (1.2 acres). The floor and rim of these pits are at elevations of about 198 m (648 ft) and 202 m (664 ft) MSL, respectively. Pit 3 was constructed on terrain that sloped downward to the northeast. The surface area of pit 3 is 3.4 ha (8.4 acres), and the floor and rim of the pit are at elevations of about 196 m (640 ft) and 202 m (663 ft) MSL, respectively. Pit 4 was constructed adjacent to pit 3 and is the largest of the pits. The surface area of pit 4 is 6.1 ha (15 acres), and the

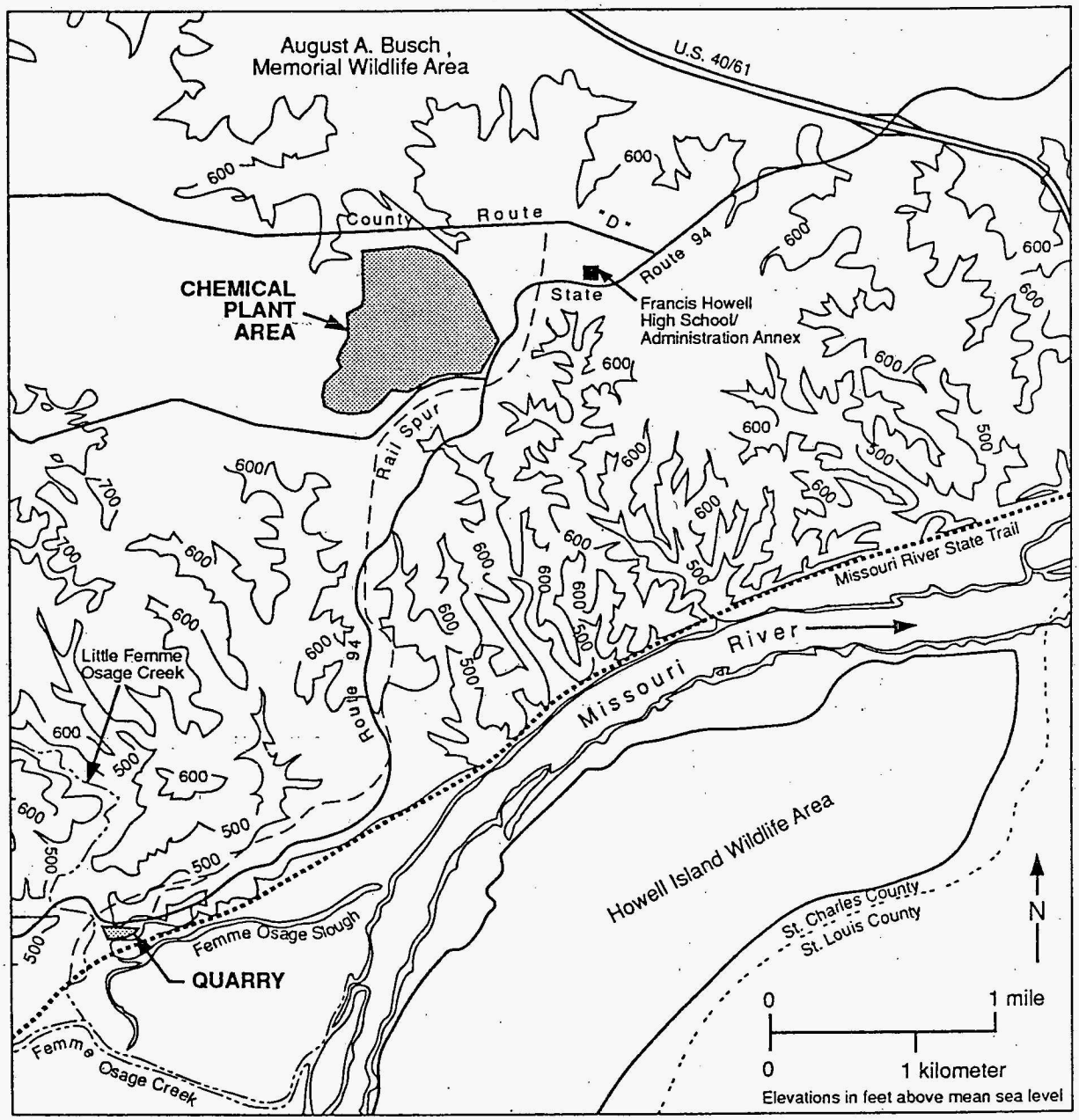

FIGURE 5 Topographic Map of the Weldon Spring Area (Source: Modified from ANL 1990)

System	Series	Stratigraphic Unit	Typical Thickness (ft)	Physical Characteristics	Aquifer
Quaternary	Holocene	Alluvium	0.5 - 4	Gravelly, silty loam	
	Pleistocene	Loess and Glacial Drift	15 - 55	Silty clay, gravelly clay, silty loam, clay, or loam over residuum from weathered bedrock	
Mississippian	Osagean	Burlington and Keokuk Limestones	100 - 200	Cherty limestone, very fine to very coarsely crystalline, fossiferous, thickly bedded to massive	Shallow Bedrock Aquifer
		Fern Glen Limestone	45 - 70	Cherty limestone, dolomitic in part, very fine to very coarsely crystalline, medium to thickly bedded	
	Kinderhookian	Chouteau Limestone	20 - 50	Dolomitic, argillaceous limestone; finely crystalline, thin to medium bedded	
Devonian	Upper	Bushberg Sandstone	40 - 55	Quartz arenite, fine to medium grained, friable	
		Lower Part of Sulfur Spring Undifferentiated		Calcareous siltstone, sandstone, oolitic limestone, and hard carbonaceous shale	
Ordovician	Cincinnatian	Maquoketa Shale	10 - 30	Calcareous to dolomitic silty shale and mudstone, thinly laminated to massive	Leaky Confining Layer
	Champlainian	Kimmswick Limestone	70 - 100	Limestone, coarsely crystalline, medium to thickly bedded, fossiliferous and cherty near base	
		Decorah Formation	30 - 60	Shale with thin interbeds of very finely crystalline limestone	
		Plattin Limestone	100 - 130	Dolomitic limestone, very finely crystalline, fossiliferous, thinly bedded	
		Joachim Dolomite	80 - 105	Interbedded very finely crystalline, thinly bedded dolomite, limestone, and shale; sandy at base	
		St. Peter Sandstone	120 - 150	Quartz arenite, fine to medium grained, massive	Deep Bedrock Aquifer
	Canadian	Powell Dolomite	50 - 60	Sandy dolomite, medium to finely crystalline, minor chert and shale	
		Cotter Dolomite	200 - 250	Agrillaceous, cherty dolomite; fine to medium crystalline; interbedded with shale	
		Jefferson City Dolomite	160 - 180	Dolomite, fine to medium crystalline	
		Roubidoux Formation	150 - 170	Dolomitic sandstone	
		Gasconade Dolomite	250	Cherty dolomite and arenaceous dolomite (Gunter Member)	
Cambrian	Upper	Eminence Dolomite	200	Dolomite, medium to coarsely crystalline, medium bedded to massive	
		Potosi Dolomite	100	Dolomite, fine to medium crystalline, thickly bedded to massive; drusy quartz common	

FIGURE 6 Generalized Stratigraphy in the Vicinity of the Chemical Plant Area (Source: ANL 1990)

floor and rim of the pit are at elevations of about 196 m (640 ft) and 202 m (663 ft) MSL, respectively. The east dike of pit 4 is common to the west dike of pit 3, and it contains an overflow pipe that connects the two pits.

The raffinate pits have a total capacity of about 500,000 m^3 (650,000 yd^3) and contain about 150,000 m^3 (200,000 yd^3) of contaminated solids (Bechtel National 1984, 1985). The solids include neutralized raffinate sludge and slag resulting from past uranium refining and other operations at the chemical plant (see Section 2.1). Pit 4 also contains wastes from the processing of thorium-containing materials and drums and rubble resulting from the Army's partial decontamination of the chemical plant. The solids in the raffinate pits are covered with water for most of the year; the amount of water is dependent on climatic conditions but is estimated to average about 216,000 m^3 (57,000,000 gal). Between 1966 and 1986, surface water evaporated from pits 1 and 2 during several summers, but water was always present in pits 3 and 4. Water has been retained in all pits since DOE assumed responsibility for the site and established a project office at the chemical plant area in 1986. In 1982, the decant lines that discharged overflow to the process sewers during the operational period of the plant were plugged in response to an overflow of pit water to the sewer system after a heavy rainstorm.

Frog Pond, located near the eastern boundary of the chemical plant area, was excavated from an existing drainage during the operational period of the plant for use as a settling basin. The pond currently receives water from storm drains at the chemical plant and surface runoff from the northeast portion of the site. Frog Pond contains about 2,000 m^3 (500,000 gal) of water, which covers about 0.3 ha (0.7 acres) at the full pool level of 192 m (630 ft) MSL; the volume of water in the pond varies throughout the year.

Ash Pond is located in a topographic low near the northern boundary of the chemical plant area and previously received slurried ash discharged from the coal-fired steam plant on-site. Prior to the recent construction of a dike and drainage system at Ash Pond (to mitigate contaminant releases off-site by diverting surface runoff away from an adjacent dump area), standing water was present intermittently at levels that depended on climatic conditions. Water in Ash Pond covered about 4.5 ha (11.1 acres) at the full pool level of 193 m (632 ft) MSL. However, since construction of the diversion system, water collects behind the dike following precipitation events, and the depth within Ash Pond currently averages only about 15 cm (6 in.).

The raffinate pits are located near the headwaters of Schote Creek on the Mississippi River side of the drainage divide that traverses the chemical plant area. Surface runoff from this side of the divide -- including Frog Pond and Ash Pond -- flows into a nearby intermittent stream and eventually enters Schote Creek. Surface discharge from Frog Pond flows via an unnamed tributary of Schote Creek to Lake 36 in the Busch Wildlife Area; overflow from Lake 36 then enters Schote Creek, which flows northeast into Lake 35. Surface discharge from Ash Pond flows via an intermittent stream into the unnamed tributary of Schote Creek, then northeast to Lake 35. Schote Creek enters Dardenne Creek, a tributary of the Mississippi River, about 6 km (3.7 mi) northeast of the chemical plant area.

The unnamed tributary of Schote Creek that drains much of the chemical plant area loses water to its streambed. Water flows in this stream during and after precipitation events, but some, if not all, of the surface flow is lost to groundwater before reaching the main stem of the creek. A dye-tracing study conducted by the Missouri Department of Natural Resources has shown that water lost from this stream flows underground and emerges to the north at or near Burgermeister Spring, located just upstream of Lake 34 in the Busch Wildlife Area (Dean 1985; Kleeschulte and Emmett 1987; Missouri Department of Natural Resources 1989). Burgermeister Spring is in an adjacent watershed and is about 2 km (1.2 mi) north of the losing reach of the unnamed tributary of Schote Creek.

The 500-year flood elevation for Schote Creek near the raffinate pits is about 160 m (530 ft) MSL (DOE 1987). Thus, the chemical plant area would not be affected by a 500-year flood occurring in the main stem of Schote Creek.

2.2.4 Groundwater

Groundwater at the chemical plant area occurs as (1) perched zones in unconsolidated deposits; (2) a shallow, unconfined aquifer in the Mississippian limestones of the Burlington-Keokuk Formation; and (3) a deep aquifer in the St. Peter sandstone. The perched groundwater zones are prevalent in the vicinity of the raffinate pits, which suggests leakage from the pits and variable horizontal and vertical hydraulic conductivities in the overburden material. Unsaturated materials, combined with poor drainage, indicate that the overburden material has a low permeability. The moisture content of the upper few meters of overburden ranges from 15 to 30%, and the clays underlying the area are highly impermeable, with laboratory-measured hydraulic conductivities ranging from about 1×10^{-8} to 1×10^{-11} m/s (DOE 1987). Localized mounding of groundwater occurs beneath the raffinate pits at an elevation of about 194 m (636 ft) MSL; this mounding is considered to be the result of pit seepage (MK-Ferguson Company and Jacobs Engineering Group 1989c).

The groundwater surface of the shallow limestone aquifer in the Burlington-Keokuk Formation has been reported to be approximately 20 m (65 ft) below the ground surface at the chemical plant area (DOE 1987) and about 11 m (36 ft) below the bottom of the raffinate pits. This elevation generally reflects local topography and exhibits both seasonal and annual variations, ranging from about 8 to 20 m (25 to 65 ft) below the surface (MK-Ferguson Company and Jacobs Engineering Group 1988). Groundwater flow in the shallow aquifer occurs in two distinct regimes: darcian (porous-medium) flow and conduit (pipe) flow. Darcian flow occurs in the fine fractures and primary porosity (pore channels) of the limestones whereas conduit flow occurs through dendritic and trellised pathways. Flow in this aquifer to the north of the groundwater divide has been reported to be generally in a northerly direction, with an average hydraulic gradient of 0.0095. Local and seasonal variations in this gradient have also been observed. In the southeast portion of the chemical plant area (south of the groundwater divide), groundwater flows to the east or southeast (MK-Ferguson Company and Jacobs Engineering Group 1988).

The deep aquifer system occurs in the saturated rocks of the St. Peter sandstone. This aquifer is separated from the shallow Burlington-Keokuk aquifer by a leaky

confining layer with an estimated conductivity of approximately 1×10^{-6} m/s. Flow in the deep aquifer system is darcian, occurring through primary porosity. The groundwater divide in this aquifer is located just north of the chemical plant area. Flow to the north of the divide is to the northeast and eventually enters the cone of depression produced by municipal pumping wells in Wentzville and O'Fallon. Flow to the south of the divide is to the southeast (MK-Ferguson Company and Jacobs Engineering Group 1988), and the eventual discharge point is not currently known.

The major groundwater aquifer at the chemical plant area that could potentially be affected by contaminant migration is the shallow aquifer in the upper weathered layer and fracture zones of the Burlington-Keokuk Limestone Formation. Below this formation, vertical migration of contaminants is impeded by shales and limestones of low hydraulic conductivity, thus minimizing potential contamination of deep, productive aquifers such as the aquifer in the St. Peter sandstone (MK-Ferguson Company and Jacobs Engineering Group 1988). Above the shallow aquifer at the chemical plant area, groundwater transport is believed to occur through seepage from the surface to near-surface materials and infiltration through the unsaturated zone. Beneath the chemical plant area, groundwater in the shallow aquifer generally flows toward the north, with some surface recharge known to occur north of the site.

2.2.5 Climate and Meteorology

The area of the Weldon Spring site has a modified continental climate characterized by moderately cold winters and warm summers. The area is in the path of cold air moving south from Canada; warm, moist air moving north from the Gulf of Mexico; and dry air moving into the Midwest from the West. The alternate invasion of the area by these air masses and the resultant conflict along frontal zones produce a wide spectrum of weather conditions, none of which typically persists for a prolonged period of time (National Climatic Data Center 1988).

Temperatures measured in the St. Louis area from 1958 through 1988 ranged from -28°C (-18°F) to 42°C (107°F). The average daily maximum temperature was about 32°C (90°F) in July and about -7°C (20°F) in January. The average number of days per year with a maximum temperature at or above 32°C (90°F) was 41 and at or below 0°C (32°F) was 28. The average number of days per year with a minimum temperature at or below 0°C (32°F) was 102 and at or below -18°C (0°F) was 4 (National Climatic Data Center 1988).

Normal annual precipitation in the area totals approximately 86 cm (34 in.), of which about 28 cm (11 in.) occurs in the spring. Based on data from 1958 through 1988, thunderstorms usually occur in the area between 40 and 50 times a year. Thunderstorms are frequently associated with summer rains and sometimes include hail and high winds; as much as 25 cm (10 in.) of rain has been recorded in 24 hours during a heavy storm. Winter is the driest season, with annual precipitation averaging about 15 cm (6 in.); snow falls in the St. Louis area as early as October and as late as May (National Climatic Data Center 1988).

From May through November, prevailing winds in the St. Louis area are from the south at an average speed of about 4 m/s (9 mph); during the remainder of the year, winds are primarily from the northwest and west-northwest at an average speed of about 5 m/s (11 mph). A peak gust of 30 m/s (66 mph) was recorded in March 1984, based on the period of record from 1984 through 1988. Tornadoes may occur in the area once or twice per year, most often in April and May, but they usually have a narrow path and often dissipate after a few kilometers; only a few of the tornadoes observed in the St. Louis area between 1918 to 1989 have been associated with extensive damage and/or loss of life. During this period of record, 20 tornadoes were observed in St. Charles County (Tucker 1989).

2.2.6 Ecology

The chemical plant area is essentially grassland/old-field habitat containing a variety of grasses and scattered small shrubs and trees. Except for the northern portion of the site, mowing maintains much of the area in a pasture-like condition, and little undisturbed and/or natural habitat exists. The chemical plant area is expected to contain relatively depauperate amphibian, reptilian, and mammalian species typically associated with urban and residential areas. Mammals could include the cottontail rabbit, opossum, raccoon, coyote, fox, deer, and a variety of small rodents; some of these mammals would be associated with the numerous buildings and other structures of the chemical plant. Few reptiles would be present at the chemical plant area, and most amphibians would be restricted to the raffinate pits, Frog Pond, Ash Pond, and intermittently ponded water and drainage ditches on-site (ANL 1990).

The predominant bird species at the chemical plant area are those typically associated with grassy urban and residential areas. These birds include the starling, mourning dove, crow, killdeer, robin, and a variety of swallows and sparrows. The surface waters at the chemical plant area also provide aquatic habitat suitable for waterfowl, and ducks and geese have been observed resting on the raffinate pits and Frog Pond. The only federally listed threatened or endangered species that could occur intermittently in the Weldon Spring area is the bald eagle. However, no critical habitat for this species exists at the site (Tieger 1988).

2.2.7 Cultural Resources

In 1986, the Missouri State Historic Preservation Office determined that an archeological survey of the chemical plant area was not required on the basis of prior disturbance, low potential for archeological remains, and possible health risks (Weichman 1986). Activities at the site continue to be coordinated with the State Historic Preservation Office.

2.2.8 Land Use and Demography

Most of the land to the north of the chemical plant area is part of the August A. Busch Memorial Wildlife Area and is undeveloped; its primary use is recreational. The

Weldon Spring Wildlife Area occupies land to the south and east, and its use is also recreational. These two wildlife areas receive an estimated 800,000 and 250,000 visitors, respectively, each year (DeBruyckere 1989). Francis Howell High School is approximately 1 km (0.6 mi) northeast of the chemical plant area. The school, including the administration annex, is used year-round and was occupied by an estimated daily average of 2,300 persons during 1988-1989. A Missouri highway maintenance facility is situated just east of the chemical plant area. The U.S. Army Reserve and National Guard Training Area is located to the west of the chemical plant area.

2.3 EXISTING ANALYTICAL DATA

General information for the raffinate pits, including physical characteristics of the sludges, is summarized in Table 1. Characterization results for Frog Pond, Ash Pond, and the raffinate pits area -- including ponded water, sludges, and interstitial water; underlying groundwater; and nearby surface water and soils -- are presented in Appendix A. That appendix also summarizes characterization data for the quarry pond because these data are relevant to a potential influent (i.e., water collected from the temporary storage area for the quarry wastes) to the water treatment plant that is planned for the chemical plant area (see Chapter 1).

TABLE 1 General Information for the Raffinate Pits

Pit Number	Construction Date	Pit Volume (m^3)	Percent Filled	Estimated Waste Volume (m^3)	Surface Water Volume (m^3)	Sludge Weight Percent Solids	Solids Weight[a] (t)
1	1958	14,100	94.0	13,700	6,100	27.6	4,370
2	1958	14,100	94.0	14,500	6,100	29.4	4,770
3	1959	127,500	77.8	98,800	38,200	27.3	32,660
4	1964	339,800	12.5	23,100	163,100	25.3	12,730

[a]The wet bulk density of the sludges is about 1.2 g/cm^3.

Sources: Data from Peterson et al. (1988) and MK-Ferguson Company and Jacobs Engineering Group (1989b).

2.4 SITE CONDITIONS THAT JUSTIFY A REMOVAL ACTION

The threats posed by the surface waters impounded at the chemical plant area are of a non-time-critical nature, i.e., no imminent or substantial endangerment of human health or the environment currently exists that would necessitate initiation of a response within 6 months. Site conditions do meet certain criteria listed in the National Oil and Hazardous Substances Pollution Contingency Plan (NCP) for categorization of specific cleanup efforts as removal actions (EPA 1990b). The eight factors identified in the NCP for consideration in determining the appropriateness of a removal action are:

1. Actual or potential exposure of nearby human populations, animals, or the food chain to hazardous substances or pollutants or contaminants;

2. Actual or potential contamination of drinking water supplies or sensitive ecosystems;

3. Hazardous substances or pollutants or contaminants in drums, barrels, tanks, or other bulk storage containers that may pose a threat of release;

4. High levels of hazardous substances or pollutants or contaminants in soils, largely at or near the surface, that may migrate;

5. Weather conditions that may cause hazardous substances or pollutants or contaminants to migrate or be released;

6. Threat of fire or explosion;

7. Availability of other appropriate federal or state response mechanisms to respond to the release; and

8. Other situations or factors that may pose threats to public health or welfare or the environment.

Site conditions meet the first criterion; actual or potential exposures are addressed in the following discussion according to the basic components of an exposure assessment: (1) contaminant sources and release mechanisms, (2) environmental transport media, (3) potential exposure points, and (4) routes of potential exposures.

If no response action is taken for the surface waters impounded at the chemical plant area, exposure to contaminants associated with these waters could occur over time. If the preferred response is selected pursuant to the EE/CA process, the following activities would occur: (1) contaminated water would be removed from the surface impoundments at the chemical plant area, (2) contaminants would be removed from these waters, and (3) the treated water would be released to the Missouri River in compliance with a permit issued to DOE by the Missouri Department of Natural Resources (see

Sections 5.4 and 6.1.2). Potential exposures associated with implementing this response are addressed in Chapter 6.

2.4.1 Contaminant Sources and Release Mechanisms

The surface waters impounded at the chemical plant area constitute sources of potential contaminant releases. The raffinate pits contain various wastes from past processing and decontamination activities at the chemical plant. Frog Pond and Ash Pond contain contaminants from (1) past discharges and (2) surface runoff, e.g., over contaminated soils nearby. Radioactive contaminants in these impounded waters include uranium and radium; chemical contaminants include metals (e.g., arsenic and manganese) and anions (e.g., fluoride, chloride, nitrate, and cyanide). The contaminants of concern for the proposed action are discussed in Section 2.4.5 and Chapter 7.

The potential for migration of radionuclides and chemicals from the impoundments is related to the physical and chemical characteristics of the contaminants, the chemistry of the local environment, and the nature of the groundwater or surface water movement. The release of contaminants from these surface waters can affect the quality of nearby sediments/soils, groundwater, surface water, and air. Possible release mechanisms associated with these waters are:

- Leaching of contaminated surface and/or subsurface materials to groundwater;
- Contact of contaminated surface water with other surface waters and sediments/soils;
- Release of contaminants (e.g., radon from the raffinate sludges) to the atmosphere; and
- Transport and/or direct ingestion by animals, with subsequent entry into the food chain.

Characterization results indicate that contaminants (e.g., uranium and nitrate) have migrated through the soil underlying the raffinate pits into the shallow aquifer; these contaminants have also migrated off-site from Frog Pond and Ash Pond via surface runoff. Weather conditions can affect the potential for contaminant release, as indicated by the previous pit overflow into the process sewer at the chemical plant following a heavy rain (see Section 2.2.3) and by increased runoff from the two ponds. Current airborne releases from the surface waters are minor; radon measurements at the chemical plant area, including the raffinate pits, are at or below area background levels (MK-Ferguson Company and Jacobs Engineering Group 1989a). Although no public drinking water supply or private well is currently affected, human exposure could occur in the future if no response action is taken. Biota are currently exposed to contaminants in the impounded surface waters because waterfowl have been observed at the pits and ponds.

2.4.2 Environmental Media

The fate and transport of a contaminant depends on both its physicochemical properties and the nature of the environmental medium to which it is released. Environmental media include the atmosphere, surface water, groundwater, and sediment/soil. At the chemical plant area, the following processes could impact the fate and transport of contaminants in these media:

- Water transfer to sediment/soil,
- Sediment/soil transfer to water,
- Surface water transfer to groundwater,
- Groundwater transfer to surface water,
- Dispersion in surface water,
- Dispersion in groundwater, and
- Dispersion in the atmosphere.

The primary transport media for potential exposures that are addressed by the proposed action are surface water and groundwater. Surface water seepage through soil to groundwater constitutes a major subsurface transport process, and runoff over soil and sediment constitutes a major surface transport process, with some loss to groundwater and subsequent recharge to surface water (see Section 2.2.3). Solids beneath the impoundments (e.g., sludges in the raffinate pits) can serve as a continuing source of surface water and groundwater contamination via suspension and/or dissolution, with subsequent transport, e.g., by dispersion. The atmosphere is not considered a significant transport medium for contaminant releases from the surface impoundments.

2.4.3 Potential Exposure Points

Exposure points are the points of potential contact by a receptor with a contaminated environmental medium. Exposure can be either direct or indirect. Direct human exposure could result from contact by workers with the impounded waters during cleanup activities or from contact by trespassers who gain entry to the chemical plant area in spite of existing access restrictions (e.g., fences, locked gates, and security guards). Indirect exposure can result from the environmental transport of contaminants off-site and could occur over time in the absence of a response action for the impounded surface waters. Potential receptors of contaminants that might migrate from these waters in the future include:

- Persons who live in the area, drink local surface water or groundwater, consume locally grown plant or animal food products, and/or consume wildlife that have been exposed to the contaminated surface waters (the nearest communities, Weldon Spring and Weldon Spring Heights, are located about 3.2 km [2 mi] northeast of the chemical plant area);

- Persons who fish or swim in nearby surface waters; and
- Visitors and staff at the nearby wildlife areas.

Biological receptors could also be affected by contaminants associated with the impounded surface waters. Exposure points include these on-site waters and off-site soils, streams, and lakes to which contaminants could migrate. The removal action identified in this EE/CA is being proposed to mitigate potential releases and subsequent exposures of these potential receptors.

2.4.4 Potential Exposure Routes

The potential routes of human exposure considered for the contaminants in the surface waters impounded at the chemical plant area are:

- Dermal contact with contaminated water,
- Inhalation of airborne contaminants,
- Ingestion of contaminated flora and fauna, and
- Ingestion of contaminated surface water and groundwater.

The first three exposure routes are not expected to play a major role in the exposure assessment. Dermal contact by a trespasser who wades or swims in these impoundments is not expected to be significant based on the presence of access restrictions at the chemical plant area. Inhalation is not expected to be significant because the contamination in the surface water impoundments is generally entrained in and/or below the surface of the water and the release of airborne contaminants is minor. To mitigate potential releases of radon gas from the raffinate pits, surface water is currently maintained in the pits (see Section 2.2.3). The pits would not be emptied until plans for managing the sludges were in place, i.e., pursuant to the RI/FS-EIS and record of decision (see Chapter 1). The treatment plant proposed in this EE/CA would be used to control water levels in the pits (e.g., following heavy rains) to mitigate potential releases until that time. The ingestion of flora or fauna (e.g., waterfowl and game animals) is not expected to be significant compared with the ingestion of contaminated water.

The primary pathway of potential human exposure to contaminants from the impounded waters is considered to be the ingestion of contaminated surface water and/or groundwater. Concentrations of chemicals and radionuclides have been detected in these waters at levels above background, and a person (i.e., trespasser) drinking these waters on-site would incur radiation doses. Elevated levels of radionuclides and chemicals have also been detected in the shallow aquifer beneath the raffinate pits, and exposure through ingestion of contaminated groundwater at the chemical plant area could also potentially occur. However, no drinking water wells are present on-site, and the ingestion of surface water by trespassers is not expected because of the presence of

access restrictions at the chemical plant area. Therefore, within the chemical plant area, ingestion is not considered to be a major route of human exposure.

Potential human exposure is most likely to result from the ingestion of surface water or groundwater in the vicinity of the chemical plant area, e.g., if contaminants were to migrate from the surface impoundments to a public or private drinking water supply. This represents the most significant route of potential exposure with regard to contaminants in these impoundments. Although contaminants have not migrated through groundwater beyond the area underlying the raffinate pits, off-site migration and related ingestion exposure could potentially occur in the future if no response action is taken. In addition, contaminants migrating from these waters into nearby surface waters via overflow, runoff, or groundwater recharge would create the potential for dermal contact with (and inadvertent ingestion of) contaminants off-site, e.g., while swimming. The removal action being proposed in this EE/CA would mitigate potential exposures via these routes by implementing source control measures for the surface water impoundments at the chemical plant area.

Transient or permanent populations of animals that occupy the chemical plant area may currently be exposed to contaminants associated with the impounded surface waters through pathways similar to those considered for human exposure, i.e., (1) direct contact, (2) inhalation, or (3) ingestion, e.g., of water, soils/sediments, or biota that has been contaminated by the uptake of radionuclides or chemicals. Also, contaminants released from the impoundments could impact local ecosystems, and wildlife off-site could be exposed via contact with affected vegetation, soil, or water.

2.4.5 Contaminants of Concern

The contaminants of concern for the proposed action are identified in Section 2.4.5.1. Potential health effects associated with exposure to these contaminants are described in Section 2.4.5.2.

2.4.5.1 Identification of Contaminants

Contaminants of concern for the proposed action were determined on the basis of their concentrations in the surface waters impounded at the chemical plant area compared with potential effluent targets (see Appendix D). This list was then reviewed to determine whether potential future impoundments could contain contaminants not already considered. Potential future impoundments include (1) water collected at the temporary storage area from runoff and any leachate generated by the quarry wastes during the short-term storage period and (2) interstitial water from dewatering the raffinate pit sludges (see Chapter 1). Because the temporary storage area would contain quarry wastes, which are the source of contaminants currently in the quarry pond, data for this pond were used to estimate the potential contaminants in collected water. Because the pit sludges represent a significant source of concentrated contamination and because the sludges may be dewatered in the future, data for the interstitial water in these sludges was used to estimate potential concentration increases to the proposed treatment system. The approach used to identify potential contaminants for this system

reflects the intent to consider response actions in a proactive and cost-effective manner such that remediation activities that may be implemented at the chemical plant area in the future are supported.

Based on these considerations, the contaminants of concern for the proposed action are chloride, fluoride, nitrate, sulfate, cyanide, antimony, arsenic, beryllium, chromium, copper, lead, manganese, nickel, selenium, radium, thorium, uranium, and 2,4-DNT. This list includes both primary and secondary contaminants of concern. A primary contaminant is one for which the average concentration in the potential water source exceeds the potential effluent target based on a consideration of various standards and criteria (see Chapter 7 and Appendixes A and D). A secondary contaminant is one for which the potential effluent target is not exceeded by the average concentration but is exceeded by the upper end of the concentration range. This approach for identifying contaminants of concern is expected to be conservative because some equalization of flow and concentration is likely (see Chapter 7 and Appendix C). The primary contaminants for the proposed action are chloride, fluoride, nitrate, cyanide, arsenic, manganese, selenium, radium, uranium, and 2,4-DNT; the secondary contaminants are sulfate, antimony, beryllium, chromium, copper, lead, nickel, and thorium.

Fluoride, nitrate, cyanide, arsenic, manganese, selenium, radium, and uranium are associated with surface waters in the raffinate pits. Nitrate and uranium are associated with Ash Pond, and chloride and uranium are associated with Frog Pond; 2,4-DNT is also included because it may be present in leachate and/or runoff collected at the temporary storage area.

2.4.5.2 Potential Health Effects from Contaminant Exposure

Potential health effects that could result from exposure to the primary and secondary contaminants associated with the proposed action are summarized in the following discussion. This summary emphasizes the ingestion pathway because it represents the primary pathway of potential human exposure to these contaminants (see Section 2.4.4).

Chloride exposure via ingestion is not typically considered toxic, but it may impact blood chemistry. Fluoride exposure via ingestion can be toxic at doses four times the maximum beneficial concentrations used to fluoridate water. At these levels, fluoride can cause severe adult health effects, particularly skeletal fluorosis. Chronic fluoride poisoning results in several symptoms, including weight loss, anorexia, anemia, and dental defects (Sax 1984).

Nitrate is not typically a major health concern, but its reduced form (nitrite) can produce serious health effects. (Nitrites have been detected in pit sludges.) Ingestion of food and water is the principal route of exposure to nitrate. Nitrate is reduced to nitrite in the digestion process, and nitrites can alter the ability of blood hemoglobin to transfer oxygen, resulting in methemoglobinemia (particularly in infants). Nitrites can also bind to amines and amides in the human digestive tract and form carcinogenic N-nitroso compounds.

Sulfates exhibit variable toxicity, generally depending on the cation with which the sulfate anion is combined (e.g., see the discussion for manganese). Adverse impacts to the gastrointestinal system, e.g., diarrhea, can result from the ingestion of high concentrations of sulfate.

Cyanide is readily absorbed by all exposure routes and can be very poisonous. Exposure to cyanide compounds over long periods of time is reported to cause loss of appetite, headache, weakness, nausea, and dizziness. Ingestion of very small amounts of sodium or potassium cyanide may cause death. Acute toxicity for cyanide is defined by an intraperitoneal LD_{50}, i.e., the lethal dose for half the test group, of 3 mg/kg (mouse data) (Sax 1984).

Most antimony compounds are poisons by the ingestion, inhalation, and intraperitoneal routes. Acute poisoning can cause vomiting, diarrhea, collapse, irregular respiration, and lowered body temperature. Locally, antimony compounds can irritate the skin and mucous membranes. Acute toxicity for antimony is defined by an LD_{L0}, i.e., the lowest lethal dose reported, of 15 mg/kg (human data) (Sax 1984).

Arsenic is a recognized human carcinogen and can affect the skin, lungs, and liver. Pentavalent arsenic, which may be the primary form of this element in surface waters, is less toxic than the trivalent form. Trivalent arsenic may also be present, e.g., if a reducing environment exists. Chronic arsenic poisoning can result from the ingestion or inhalation of arsenic compounds, giving rise to a wide range of symptoms that include liver damage, dermal abnormalities, and disturbances of the blood, kidneys, digestive system, and nervous system. Although highly toxic effects can occur following exposure via the intramuscular and subcutaneous routes, these routes are not significant for the proposed action. Acute toxicity for arsenic is defined by a subcutaneous LD_{50} of 300 mg/kg (guinea pig data) and an intramuscular LD_{50} of 20 mg/kg (rat data) (Sax 1984).

Beryllium is a suspected human carcinogen and is a poison by the intravenous route. Animal studies have indicated that ingestion can cause adverse lung impacts. In humans, contact dermatitis can result from skin exposure, and lung cancer can result from chronic inhalation. Although the most common route of human exposure to beryllium is inhalation of dusts and fumes, this exposure is not expected to be significant for the proposed action. Acute toxicity for beryllium is defined by an intravenous LD_{50} of 496 μg/kg (rat data) (Sax 1984).

Chromium is a human poison by ingestion and is also a recognized human carcinogen. Hexavalent chromium is more toxic than the trivalent form; the same relationship holds for chromium compounds. In aquatic systems, hexavalent chromium can act as a water-soluble complex ion that may persist in the environment. Although trivalent chromium compounds are necessary for glucose metabolism, hexavalent chromium is a deleterious substance that can result in severe irritation to skin, nasal mucosa, and the gastrointestinal tract. Acute toxicity for chromium is defined by an intravenous TD_{L0}, i.e., the lowest toxic dose reported, of 2,160 μg/kg (rat data) (Sax 1984).

Copper is an experimental tumorigen and teratogen, and ingestion can irritate the gastrointestinal tract, causing nausea and vomiting. More serious systemic effects

include gastrointestinal bleeding, convulsions, and death. Acute toxicity for copper is defined by an oral TD_{L0} of 120 μg/kg (human data) (Sax 1984).

Lead has recently been classified as a suspected human carcinogen. It is a human poison by ingestion and moderately toxic by the intraperitoneal route. The major organ systems affected are the nervous system, blood system, and kidneys; lead has no demonstrated biological function. Adults absorb 5 to 15% of ingested lead and retain less than 5%; children absorb about 50% and retain about 30%. Symptoms of acute ingestion include colic, anorexia, vomiting, malaise, and convulsions. Acute toxicity for lead is defined by an oral LD_{L0} of 160 mg/kg (pigeon data) (Sax 1984).

The chemical toxicity of manganese depends on its form. The adverse health effects of exposure to manganous (reduced form) oxide are not fully known, and in fact this compound is used as a dietary supplement. Manganous sulfate is also used as a food additive in trace amounts, but exposure to very high concentrations of this compound may be toxic. Acute toxicity for manganous sulfate is defined by an intraperitoneal LD_{50} of 120 mg/kg (mouse data) (Sax 1979). The ingestion of manganese (oxidized form) compounds could lead to potential adverse health effects related to dysfunction of blood and protein chemistry in terms of oxygen transport and enzyme activity. Manganese dioxide is considered highly toxic via the intravenous route, and exposure to manganese compounds through inhalation can also result in adverse health effects. However, these two routes are not expected to be significant for the proposed action. Chronic manganese poisoning resulting from inhalation primarily affects the central nervous system. Permanent disability, e.g., in terms of gait and speech, can result from long-term exposure, although symptoms may improve if the source of exposure is removed. Other adverse health effects of long-term exposure to manganese compounds include upper respiratory infections, weakness, and parkinsonism. Acute toxicity for manganese dioxide is defined by an intravenous LD_{L0} of 45 mg/kg (rabbit data) (Sax 1984).

Nickel is a human poison by most routes, and many of its compounds are poisonous and carcinogenic. Inhalation of nickel can result in lung and nasal cancers; however, this route is not significant for the proposed action. Absorption from the gastrointestinal tract is limited, but ingestion of large doses of nickel compounds can cause intestinal disorders, convulsions, and asphyxia. Acute toxicity for nickel is defined by an oral LD_{L0} of 5 mg/kg (guinea pig data) (Sax 1984).

Selenium is an essential trace element for many species but can produce adverse health effects at higher doses. It is a human poison by the inhalation and intravenous routes; however, these two routes are not significant for the proposed action. Selenium can also result in toxic effects via ingestion. Selenosis in humans has resulted from an average daily intake of 3.2 mg/d; symptoms include skin lesions and brittle hair and nails. Similar effects have been observed in individuals with blood levels of 800 μg/L. Individuals living in an area of high soil selenium, whose daily selenium intake was estimated to be 0.1 to 0.2 mg/kg-d, showed signs of selenium toxicity. Acute toxicity for selenium is defined by an intravenous LD_{50} of 6 mg/kg (rat data) (Sax 1984).

Radium is highly radiotoxic; inhalation, ingestion, and whole-body exposure can cause skin damage, osteitis, blood dyscrasias, lung cancer, and bone cancer. Due to its chemical similarity to calcium, radium has an affinity for hard tissue (e.g., bone); radium

that deposits in the bone of individuals exposed to high doses can cause sarcomas (National Research Council 1988). Radium can also deposit in soft tissue, with an associated potential for similar adverse radiation effects.

Thorium may cause liver cancer and acute myeloid leukemia. It forms insoluble compounds with fluoride, iodate, oxalate, phosphate, and oxygen. Due to its slow rate of hydrolysis, blood transfer of thorium is low and ingested thorium is not readily absorbed. Following inhalation or ingestion, thorium can be deposited in the lungs, liver, lymph nodes, bones, kidney, and spleen (National Research Council 1988).

Uranium is a recognized carcinogen and poses both a radiological and a chemical hazard. Insoluble compounds, e.g., uranium oxides, pose primarily a radiological hazard resulting from inhalation and lung irradiation; however, this exposure is not expected to be significant for the proposed action. The ingestion of soluble uranium compounds can lead to kidney damage and arterial lesions (Sax 1979); other potential adverse health effects include damage to the cardiovascular, hematopoietic, endocrine, and immune systems. (Soluble uranium compounds exist in surface waters at the chemical plant area, whereas insoluble compounds are present in the sludges; the insoluble compounds serve as an equilibrium source of dissolved uranium.)

The compound 2,4-DNT is a suspected human carcinogen. Exposure to 2,4-DNT through ingestion, inhalation, or dermal contact can cause adverse health effects such as anemia, methemoglobinemia, cyanosis, and liver and kidney damage. Acute toxicity for 2,4-DNT is defined by an oral LD_{50} of 1,250 mg/kg (mouse data) (Sax 1984).

3 REMOVAL ACTION OBJECTIVES

The general objectives of the proposed removal action at the chemical plant area are to (1) eliminate, reduce, or otherwise mitigate the potential for release of radioactive and chemical contaminants from impounded surface waters, (2) minimize threats to human health and the environment resulting from exposure to these contaminants, and (3) support comprehensive site remediation. The specific objectives are defined in Sections 3.1 through 3.4 in terms of statutory limits, scope and purpose of the proposed action, schedule, and compliance with regulatory requirements.

3.1 STATUTORY LIMITS

Authority for responding to releases or threats of releases from a contaminated site is addressed in Section 104 of CERCLA. Executive Order 12580 delegates to DOE the response authority for DOE sites. Under CERCLA Section 104(b), DOE is authorized to undertake such investigations, surveys, testing, or other data gathering deemed necessary to identify the existence, extent, and nature of the contaminants present at the Weldon Spring site, including the extent of threats to human health and the environment. In addition, DOE is authorized to undertake planning, engineering, and other studies or investigations appropriate to directing response actions to prevent, limit, or mitigate potential risks associated with the site. The statutory limits of Superfund-financed removal actions are 1 year and $2 million, as specified in Section 104(e)(1) of the Superfund Amendments and Reauthorization Act (SARA). These limits do not apply to removal actions authorized under CERCLA Section 104(b) that are not financed by Superfund monies, such as the proposed action at the Weldon Spring site. However, these limits are considered during DOE's evaluation of potential removal actions, such as the management of surface waters impounded at the chemical plant area.

3.2 SCOPE AND PURPOSE

The primary scope of the proposed removal action is management of radioactively and chemically contaminated surface waters currently impounded at the chemical plant area. The purpose of the proposed action is to limit the release of contaminants from these waters, thereby minimizing the potential for associated impacts to human health and the environment. The secondary scope of this action is management of contaminated surface waters that will be impounded at the chemical plant area following the initiation of additional cleanup activities at the Weldon Spring site. The ability to manage these waters will contribute to the efficient performance of comprehensive response actions being considered for the site. Waste disposal decisions are beyond the scope of the proposed action; they are being addressed in the RI/FS-EIS currently in preparation (see Chapter 1).

The specific objectives of the alternative preferred for the proposed action (see Section 5.4) are to:

- Remove the water from impoundments at the chemical plant area,
- Treat the water to remove radioactive and chemical contaminants,
- Release the treated water in compliance with permit limitations, and
- Provide the capability to treat additional waters that may be generated and impounded at the chemical plant area in the near future.

3.3 SCHEDULE

If removal and treatment of the surface waters impounded at the chemical plant area are implemented pursuant to this EE/CA process, it is expected that support and construction activities would begin in 1991 and water treatment would be initiated in 1992. To ensure protection of human health and the environment, removal and treatment of waters impounded at the chemical plant area would continue throughout the course of response activities for the project. The duration of this treatment is estimated to be 8 to 10 years. Additional details on the treatment schedule are presented in Chapter 7.

3.4 COMPLIANCE WITH REGULATORY REQUIREMENTS

The proposed management of contaminated surface waters at the chemical plant area would be conducted in accordance with all applicable or relevant and appropriate requirements (ARARs). As described in EPA guidance, ARARs can be divided into three categories: (1) contaminant-specific, (2) location-specific, and (3) action-specific. Contaminant-specific ARARs address certain chemical species or a class of contaminants, e.g., uranium or halogenated organic compounds, respectively, and relate to the level of contamination allowed for a specific pollutant in various environmental media (i.e., soil, water, and air). Location-specific ARARs are based on the specific setting and nature of a site, e.g., location in a floodplain and proximity to wetlands or the presence of archeological resources and historic properties. Action-specific ARARs relate to specific response actions (i.e., removal or remedial actions) that are proposed for implementation at a site, e.g., incineration standards for organically contaminated soil. Thus, potential ARARs for action(s) proposed at a site are determined on the basis of factors specific to that site and the individual action(s).

The preliminary identification of potential ARARs for the proposed removal action at the chemical plant area is based on the nature of the contamination (radioactively and chemically contaminated surface water), the location of the impoundments (in a previously disturbed area not within a floodplain), and the specific scope of the preferred alternative (see Section 6.3). In addition to ARARs, other requirements that

may play a role in the selection and implementation of a preferred alternative are "to-be-considered" (TBC) requirements. These TBC requirements, e.g., individual agency or departmental standards (such as DOE Orders) are not promulgated by law but may be significant for the proposed action. Potential requirements for the proposed management of contaminated surface waters impounded at the chemical plant area are presented in Appendix D. Potential effluent targets derived from consideration of these requirements are identified in Chapter 7 and Appendix A.

4 REMOVAL ACTION TECHNOLOGIES

The following discussion summarizes the procedures and rationale for identifying alternatives by assembling technologies that may be implemented to achieve the objectives of the proposed removal action (see Section 3.2). Due to the nature of the proposed action, i.e., management of contaminated surface waters impounded at the chemical plant area, the number of practicable and suitable treatment technologies that can be applied is limited. The technologies considered in selecting response action alternatives include those identified in the NCP. Additional technologies addressed in the following discussion are based on experience and information gained as a result of response action planning and implementation at similar sites.

Section 121 of SARA identifies a strong statutory preference for remedial actions that are highly reliable and provide long-term protection. The primary requirements for a selected remedy are that it both protect human health and the environment and be cost-effective. Additional selection criteria include the following:

- Preferred remedies are those in which the principal element is treatment to permanently or significantly reduce the toxicity, mobility, or volume of hazardous substances, pollutants, or contaminants.
- Where practical treatment technologies are available, off-site transport and disposal without treatment is the least preferred alternative.
- Permanent solutions and alternative treatment technologies or resource recovery technologies should be assessed and used to the maximum extent practicable.

These criteria for remedial actions are considered, as appropriate, for assembling technologies into alternatives for the removal action being addressed in this EE/CA.

A broad overview of technologies that could be used to protect human health and the environment is presented in Sections 4.1 and 4.2. This overview is based on (1) the current understanding of contamination in the impounded surface waters and (2) the potential for related exposure. The following discussion of technologies is divided into two general categories: source control and migration control.

4.1 SOURCE CONTROL

The purpose of source control is to protect human health and the environment by directly managing a contaminant source to reduce the potential for exposure. This reduction may be achieved by altering the nature of a waste source (i.e., the radioactively or chemically hazardous constituents) to reduce contaminant toxicity, mobility, and/or volume. Source control technologies that may be applicable to managing the impounded surface waters at the chemical plant area include institutional controls, removal, treatment, temporary storage, and disposal.

4.1.1 Institutional Controls

Institutional controls involve (1) monitoring, (2) access restrictions such as physical barriers (e.g., fences), and (3) use or deed restrictions. These controls do not reduce contaminant toxicity, mobility, or volume, but they may reduce the potential for exposure to contaminated materials. Institutional controls currently in place at the chemical plant area include an extensive monitoring program, which assesses contaminant migration, and fences and DOE ownership, which limit entry and use. The improvement of existing monitoring and barriers and the continued control of property use would be straightforward. Therefore, institutional controls are considered applicable as a support component for the proposed action.

4.1.2 Removal

Removal of contaminated materials focuses on physical displacement and may involve activities such as excavation, surface decontamination, demolition, and/or pumping. The first three technologies are applicable to the management of contaminated soils and structures. Therefore, they are not appropriate for the proposed action and are not considered further. Pumping can be used to remove a contaminated solution from its current location, and it permits subsequent removal of contaminants from the solution (i.e., through treatment). Because pumping would initiate source control and a reduction of contaminant toxicity, mobility, and volume at the surface impoundments, this response is considered applicable to the proposed action.

4.1.3 Treatment

Treatment encompasses a wide range of chemical, physical, and/or biological technologies that address various types of contamination in various media. Only a limited number of technologies are effective when radioactive contamination is present. Treatment technologies for radioactive wastes can be divided into two general categories: (1) those that remove radioactive constituents from the waste matrix and (2) those that change the form of the waste material, thereby reducing contaminant toxicity, mobility, and/or volume. For treating contaminated liquids, the first category can consist of chemical processes such as coagulation/precipitation and oxidation and physicochemical processes such as ion exchange and adsorption; biological processes such as activated sludge treatment and denitrification in stirred reactors can also be used, e.g., to remove organics and nutrients such as nitrates from a waste stream. These treatment technologies are routinely employed in conventional wastewater treatment systems. The second category can consist of physical processes such as vapor recompression/distillation. This technology is typically used to treat concentrated waste streams.

Treatment has the capacity to permanently and significantly reduce contaminant toxicity, mobility, and/or volume in the surface waters impounded at the chemical plant area. Therefore, treatment is considered applicable to the proposed action. Potentially applicable treatment technologies are evaluated in Appendix B and assembled into

potential treatment system options for evaluation in Appendix C. The preferred system is described in Appendix C.

4.1.4 Temporary Storage

Temporary storage consists of isolating contaminated materials in a manner that protects human health and the environment in the short term until the ultimate disposition of the materials can be determined. Temporary storage can be an appropriate response for contaminated solids (e.g., soils and sludges), but it would not be an appropriate response for the large volume of surface waters impounded at the chemical plant area. These waters are in de facto storage at their current location, and no other storage system is available to receive them. Hence, consideration of temporary storage for the proposed action is limited to the management of solids that may be generated during implementation of the response selected pursuant to this EE/CA process.

Temporary storage of these solids could be achieved by placing them in an existing engineered structure (e.g., Building 434 at the chemical plant area, see Chapter 7) or in a facility newly constructed for containment purposes (e.g., the on-site temporary storage area planned for the quarry bulk wastes, see Chapter 1). This technology would not reduce contaminant toxicity or volume but would reduce contaminant mobility and the associated potential for exposure. An off-site facility is neither currently available nor expected to become available within an appropriate time frame (i.e., within the next 2 to 3 years). Thus, only on-site temporary storage is considered potentially applicable to the proposed action.

4.1.5 Disposal

Disposal can involve the permanent placement of wastes in a manner that protects human health and the environment in the long term. This technology can effectively reduce contaminant mobility and the associated potential for population exposure. However, unless the wastes are treated before disposal, this technology reduces neither the volume of the wastes nor the toxicity of its constituents. (In this discussion, disposal is considered to apply to untreated materials, as distinct from treatment followed by the release of treated materials.) Contaminated liquids, which are the focus of the proposed removal action, can be disposed of in a confined system or by direct discharge into the environment. A facility for the confined disposal of untreated liquids is neither currently available nor expected to become available within an appropriate time frame. Untreated liquids can also be discharged directly (1) onto land, e.g., using spray irrigation or evaporation ponds, or (2) into a nearby surface water, e.g., a stream or river. Direct land disposal of untreated water would not reduce contaminant toxicity, mobility, or volume. Because of concerns regarding implementation, including land availability and the need for treated waters to meet target release limits, direct disposal is considered generally unacceptable.

Disposal decisions might also be considered for contaminated solids that would be generated if the preferred alternative were selected pursuant to this EE/CA process (see Section 5.4). However, such decisions are beyond the scope of the proposed action (they

are being addressed in the RI/FS-EIS for the project, see Chapter 1). Hence, only temporary storage can be considered at this time for process residues that may be generated by the proposed action (see Section 4.1.4).

4.2 MIGRATION CONTROL

The purpose of migration control is to mitigate potential exposures to contaminants transported from a source, e.g., via the pathways described in Section 2.4. An additional objective of migration control is to limit human activity that could result in the transport of contaminated materials. Migration control technologies that are potentially applicable to the proposed action include institutional controls and waste containment/treatment.

4.2.1 Institutional Controls

Institutional controls, which are described in Section 4.1.1, are currently in place at the chemical plant area. The site is owned by DOE, and DOE ownership will continue. Improvements could be made in the existing monitoring system and physical barriers, e.g., by installing additional wells and fortifying fences. Well additions could reduce the potential for exposure to contaminants that may have migrated; fence improvements could reduce the potential for contaminant migration by human activities and could limit contact with areas to which contaminants have already migrated. Thus, institutional controls are considered applicable as a support component for the proposed action.

4.2.2 Containment/Treatment

The purpose of containment is to reduce contaminant mobility and the associated potential for exposure. Containment technologies, in and of themselves, do not typically reduce contaminant toxicity or volume. Containment can be achieved by media-specific stabilization techniques for migration control. Technologies for migration control of contaminated water that may be applicable to the proposed action include:

- Surface water -- dikes, terraces, channels, downpipes, grading, and surface seals (with containment of runoff); and

- Groundwater -- slurry/cutoff walls, grout curtains, subsurface drains or other leachate containment systems, and groundwater pumping. (Groundwater is included because it has been contaminated by seepage from on-site surface waters and can recharge nearby surface waters.)

When used in conjunction with containment technologies, treatment technologies for migration control can reduce contaminant volume as well as toxicity and mobility.

Containment/treatment technologies for migration control of contaminated water include:

- Surface water -- in-situ treatment or runoff collection (e.g., with dikes or channels) in conjunction with physical/chemical/biological treatment systems; and
- Groundwater -- groundwater pumping/leachate collection in conjunction with physical/chemical/biological treatment systems.

As a migration control measure, containment/treatment is considered potentially applicable to the proposed action. Potential treatment technologies, including in-situ applications, are evaluated in Appendix B.

4.3 SUMMARY OF POTENTIALLY APPLICABLE TECHNOLOGIES

The identification and preliminary screening of the broad categories of potential source control and migration control technologies for this action are summarized in Tables 2 and 3, respectively. The following general response technologies are considered potentially applicable to managing the surface waters impounded at the chemical plant area: (1) institutional controls, as support for primary responses; (2) removal (pumping); (3) treatment following removal; and (4) in-situ containment/treatment.

4.4 DEVELOPMENT OF PRELIMINARY ALTERNATIVES

4.4.1 General Criteria

Section 105 of SARA required the President (who subsequently delegated this responsibility to the EPA) to propose amendments to the NCP, and the EPA recently published the revised NCP (EPA 1990b). Categories of alternatives for remedial actions recommended in the revised NCP are considered in the development of alternatives for the proposed removal action, as appropriate; these categories are:

- Containment, with institutional controls as necessary -- involving little or no treatment, but protective of human health and the environment by preventing or controlling exposures to contaminants through engineering controls and ensuring the continued effectiveness of a response; and
- Treatment -- ranging from (a) treatment as the principal element of the alternative, to reduce the principal threat(s) posed by a site (i.e., may not involve the highest degree of treatment or the treatment of all wastes) to (b) treatment to the maximum extent feasible, minimizing the need for long-term management of the wastes.

A no-action alternative is also included to provide a baseline for comparison with other alternatives.

TABLE 2 Summary of General Response Technology Screening: Source Control

Source Control Technology	Evaluation Result	Comments
Institutional Controls		
Physical barriers	Retained	Limits on-site exposure to contaminants; may be used as support for other technologies.
Use or deed restrictions	Retained	Limits on-site exposure to contaminants; may be used as support for other technologies.
Monitoring	Retained	Provides data for assessing source control measures; may be used as support for other technologies.
Removal		
Pumping	Retained	Reduces contaminant mobility by removing its source; allows subsequent treatment; requires pumping/collection facility.
Treatment		
Chemical treatment		
Precipitation, ion exchange, oxidation/reduction, others	Retained	May reduce contaminant toxicity, mobility, or volume; requires treatment facility and bench-scale testing.
Physical treatment		
Filtration, vapor vapor recompression/distillation, others	Retained	May reduce contaminant toxicity, mobility, or volume; requires treatment facility and bench-scale testing.
Biological treatment		
Activated sludge, trickling filters, surface impoundments, others	Retained	May reduce contaminant toxicity, mobility, or volume; requires treatment facility and/or land area and bench-scale testing.

TABLE 2 (Cont'd)

Source Control Technology	Evaluation Result	Comments
Temporary Storage		
On-site	Retained	May reduce contaminant mobility and potential exposure (to process residues) while a permanent remedy is developed; limits short-term land use; requires storage facility.
Off-site	Rejected	Not currently available and not expected to become available within the time frame of a proposed response due to technical and institutional factors.
Disposal[a]		
Direct disposal in land-based facility	Rejected	Not applicable due to technical and institutional factors.
Direct application to land	Rejected	Not applicable due to technical and institutional factors.
Direct discharge to surface water	Rejected	Not applicable due to technical and institutional factors.
Ocean disposal	Rejected	Not applicable due to technical and institutional factors.

[a]Disposal is considered to apply to untreated materials. Disposal in a facility or in the ocean are not available options, and direct discharge to land or surface water would be constrained by availability and regulatory factors (including facility licensing and transportation requirements). Disposal decisions for the Weldon Spring Site Remedial Action Project will be addressed in the RI/FS-EIS that is currently in preparation (see Chapter 1).

TABLE 3 Summary of General Response Technology Screening: Migration Control

Migration Control Technology	Evaluation Result	Comments
Institutional Controls		
Physical barriers	Retained	May limit exposure to contaminants; may be used as support for other technologies.
Use or deed restrictions	Retained	May limit exposure to contaminants; may be used as support for other technologies.
Monitoring	Retained	Provides data for assessing contaminant migration; may be used as support for other technologies.
Containment/Treatment		
In-situ and/or engineered system	Retained	Reduces contaminant mobility; when containment is used in conjunction with treatment, may also reduce contaminant toxicity and volume; requires containment/treatment system(s).

4.4.2 Assembly of Technologies into Alternatives

The general technologies described in Sections 4.1 and 4.2 were screened for applicability to the proposed management of contaminated surface waters impounded at the chemical plant area (see Tables 2 and 3). This preliminary screening has identified the following general response technologies as potential components of alternatives for the proposed action: institutional controls, pumping, in-situ containment, treatment, and temporary storage (i.e., of process residues) on-site. These technologies have been grouped into the following preliminary removal action alternatives:

Alternative 1: No action.

Alternative 2: Institutional controls, e.g., improvement of existing access restrictions.

Alternative 3: Institutional controls and in-situ containment, e.g., using trenches and grout.

Alternative 4: Institutional controls, pumping, and treatment, with temporary storage of process residues on-site pending upcoming disposal decisions for the project.

5 ANALYSIS OF REMOVAL ACTION ALTERNATIVES

The preliminary alternatives identified in Section 4.4.2 were evaluated for applicability to the proposed management of contaminated surface waters impounded at the chemical plant area according to three general criteria: (1) effectiveness, (2) implementability, and (3) cost. These criteria are defined in Section 5.1. The results of this evaluation are presented in Section 5.2, and a comparative summary is presented in Section 5.3. The preferred alternative for the proposed action is identified in Section 5.4.

5.1 EVALUATION CRITERIA

The effectiveness of an alternative is defined by its ability to protect human health and the environment from contaminant-associated risks in both the short term and the long term. Measures of effectiveness include (1) timeliness; (2) reduction of contaminant toxicity, mobility, and volume (e.g., via treatment); (3) reduction of potential risks to human health and the environment; and (4) consistency with regulatory requirements.

The implementability of an alternative is defined by its technical feasibility, availability, and administrative feasibility. Technical feasibility addresses the demonstrated performance, construction, operation, maintenance, replacement, and monitoring of an alternative's technical components, as appropriate; potential constraints associated with the site environment are also considered. Availability addresses the resources required to implement specific components of an alternative and the ability to obtain them. Administrative feasibility addresses the acceptability of an alternative by other agencies and groups, and it can be affected by the permanence of the solution.

The cost of an alternative is considered only in a comparative manner, e.g., to determine if the cost of one alternative is much greater than that of another alternative of similar effectiveness. General estimates of potential costs for each alternative can be compared to permit a screening according to relative costs.

5.2 EVALUATION OF ALTERNATIVES

5.2.1 Alternative 1

The no-action alternative provides a baseline for comparison with the other alternatives. Timeliness, implementability, and cost do not apply to Alternative 1. In terms of protectiveness, (1) contaminant toxicity, mobility, and volume would not be reduced; (2) potential wildlife and trespasser exposures to water impounded at the chemical plant area would continue; and (3) contamination could migrate farther -- e.g., into groundwater beneath the raffinate pits -- such that additional exposures could occur over time.

5.2.2 Alternative 2

Alternative 2 consists of improving existing institutional controls (e.g., increasing access restrictions) and could be implemented in a timely manner with readily available resources. However, the protectiveness of this alternative relative to human health and the environment would be effectively the same as that for Alternative 1. The short-term cost of Alternative 2 would be lower than for Alternatives 3 and 4, but the long-term cost is expected to be higher due to (1) the eventual need for a permanent response, (2) the potential increased extent of contamination before such a response is initiated, (3) monitoring and maintenance, and (4) inflation. Thus, Alternative 2 would not reduce potential exposures or be cost-effective.

5.2.3 Alternative 3

Alternative 3 consists of in-situ containment with institutional controls and could be implemented in a timely manner with readily available resources. However, the technical feasibility of installing a complete containment system at each impoundment would be low. The containment system could be composed of one or more of the following: a surface runoff control (e.g., berm), a vertical perimeter grout curtain, and a lateral underlying grout layer. The most effective containment system would include each of these components. In addition, a surface containment structure (e.g., a plastic cover or net) could be constructed above the impoundments. Although a cover could mitigate wildlife exposure at the impoundments, it would not be responsive to the primary threat associated with the contaminated surface waters, i.e., potential ingestion of water contaminated as a result of migration. Furthermore, emplacement would be expensive and somewhat difficult because of the extensive area requiring coverage. Hence, this variation was not considered further.

Although contaminant mobility would be somewhat reduced under Alternative 3, toxicity and volume would not be reduced. Because the surface water would remain in the impoundments, potential exposures of wildlife and trespassers would continue. Thus, although potential surface water and groundwater migration would be reduced if an effective containment system could be constructed, Alternative 3 would be technically difficult, does not constitute a permanent solution, and would not reliably protect human health and the environment for the long term.

Potential environmental impacts associated with Alternative 3 include temporary disturbance of soils at each impoundment, temporary increases in airborne releases, and short-term displacement or loss of vegetation and wildlife due to noise and other impacts related to berm construction and grouting activities. In addition, these activities could increase concentrations of suspended solids in nearby surface waters during the short term. Air would be monitored and good engineering practices and mitigative measures would be implemented (e.g., sediment barriers and surface wetting) to minimize potential releases. No impacts to endangered or threatened species would be expected from implementing Alternative 3 because the site does not provide habitat for such species.

Construction of new runoff controls or improvement of existing berms would be straightforward, but their effectiveness would be limited. Surface controls would

mitigate contaminant transport via the surface water pathway, but they would not mitigate potential groundwater migration. Adding perimeter grout curtains to the containment system could somewhat reduce subsurface migration, but technical feasibility would be constrained by site conditions. Excavating the grout trenches would be difficult in certain areas (e.g., raffinate pits 3 and 4) due to the proximity of the site boundary and other confining features. In addition, significant manpower and material allocations would be required to emplace a contiguous grout seal around substantial areas and to significant depths at the various impoundment locations (e.g., averaging about 20 m [65 ft] at the raffinate pits). Extending the grout curtains to bedrock could mitigate potential lateral migration, but contaminants could still migrate vertically.

Including an underlying grout seal in the containment system could mitigate vertical migration, but installation would be very difficult. Underlying containment at the four pits and two ponds would require subsurface grouting over a combined area of about 15 ha (37 acres). Injection of a contiguous grout layer under each impoundment would be severely constrained by the considerable areal extent as well as the nature of the subsurface (limestone).

Finally, the cost of Alternative 3 would be very high; the cost estimate for lateral grout containment at the 3.6-ha (9-acre) quarry was $4 million, increasing to over $50 million with the inclusion of an underlying grout layer (ANL 1990). If complete grout containment is implemented for the surface impoundments at the chemical plant area, the cost is expected to be comparable. Further, extensive monitoring and maintenance would be required due to the uncertainty of system integrity. In summary, a complete grout containment system would be very expensive and extremely difficult to achieve.

5.2.4 Alternative 4

Alternative 4 consists of removing and treating the contaminated water from the surface impoundments at the chemical plant area in a newly constructed treatment plant. This alternative would (1) reduce contaminant toxicity, mobility, and volume at the impoundments, (2) mitigate potential current and future exposures, and (3) provide a permanent response to potential threats associated with the contaminated waters. Potential environmental impacts and mitigative measures associated with constructing the treatment plant would be similar to those identified for Alternative 3. (Potential impacts of construction and operation are further defined in Chapter 6.) However, unlike Alternative 3, Alternative 4 would have a positive impact on water resources because removing and treating the contaminated surface waters would permanently control the source of potential migration and exposure. Alternative 4 could be implemented in a timely manner with readily available resources. The short-term costs of Alternative 4 would be higher than those of Alternatives 1 and 2 and lower than those of Alternative 3 (for the full containment system) (see Appendix C). Total costs would be lower for Alternative 4 than for the other three alternatives due to the timely initiation of a permanent response. Furthermore, Alternative 4 would facilitate comprehensive cleanup activities at the site whereas Alternatives 1, 2, and 3 would not. Therefore, Alternative 4 would be very cost-effective.

Potential impacts associated with Alternative 4 are likely to be applicable to the other alternatives in the long term. If a permanent solution for the impounded surface waters is not implemented at this time, the water would be remediated in the future as part of the overall response action for the chemical plant area of the Weldon Spring site. Hence, Alternative 4 would support overall site remediation decisions in a timely manner to ensure both short-term and long-term protection of human health and the environment.

5.3 COMPARATIVE SUMMARY

The four alternatives for managing the surface waters impounded at the chemical plant area were compared on the basis of effectiveness (e.g., protectiveness), implementability, and cost. This comparison is presented in Table 4 and may be summarized as follows:

- Alternative 1, no action, would not ensure protection of human health and the environment; implementability and cost do not apply to the no-action alternative.

- Alternative 2, institutional controls, would be similar to Alternative 1 in terms of effectiveness. Implementation would be straightforward, and the short-term cost would be the lowest of the three action alternatives. However, the long-term cost would be higher than that of Alternative 4 because a permanent response will eventually be required.

- Alternative 3, institutional controls and in-situ containment, could reduce potential exposures via migration but would not reduce potential exposures to the surface waters that would remain in the impoundments (as for Alternatives 1 and 2). Implementation would require substantial manpower and material commitments, and system integrity would be difficult to ensure. The short-term cost would be much higher than that of Alternative 2 and is also expected to be higher than that of Alternative 4 (e.g., if full containment is implemented); the long-term cost would be similar to that of Alternative 2.

- Alternative 4, institutional controls and pumping and treatment, with on-site storage of process residues, would be most protective of human health and the environment. It could be implemented with standard, available technologies and would be the most cost-effective of the alternatives.

TABLE 4 Evaluation of Removal Action Alternatives

Alternative	Effectiveness	Implementability	Cost
Alternative 1: No action	Potential exposures of wildlife and trespassers to the impounded surface waters would continue; potential contaminant migration would continue and could increase exposures to human, animal, and plant populations over time; contaminant toxicity, mobility, and volume would not be reduced.	Not applicable.	Not applicable.
Alternative 2: Institutional controls	Similar to Alternative 1.	The methods used would be straightforward and readily available; however, the performance of this alternative would not be reliable because potential exposures to trespassers or wildlife would continue.	Lower than Alternatives 3 and 4 in the short term but total costs would be higher due to monitoring and maintenance, the potential increased extent of contamination, inflation, and the eventual need for a permanent response.

TABLE 4 (Cont'd)

Alternative	Effectiveness	Implementability	Cost
Alternative 3: Institutional controls and in-situ containment	Potential exposures of wildlife and trespassers to the impounded surface waters would continue; effectiveness of groundwater migration control is uncertain due to difficulty in ensuring and maintaining subsurface containment; contaminant mobility would be somewhat reduced, but contaminant toxicity and volume would not be reduced.	Similar to Alternative 2; construction and maintenance of a complete subsurface containment system could be difficult due to surface features, subsurface materials, and depth to bedrock.	Higher than Alternative 2 and probably higher than Alternative 4 in the short term due to technical difficulties and equipment and resource requirements. The long-term cost would be higher than Alternative 4, as described for Alternative 2.
Alternative 4: Institutional controls and pumping and treatment, with on-site storage of process residues	Pumping and treatment of the impounded surface waters would reduce potential wildlife and trespasser exposures; contaminant toxicity, mobility, and volume would be reduced at the impoundments; and a permanent solution would be implemented.	The methods used would be straightforward and the resources would be readily available; pumping and treatment would be implemented with standard equipment and procedures; residues would be stored in an on-site facility.	Higher than Alternative 2 and similar to Alternative 3 in the short term, but total costs would be lower due to the timely implementation of a permanent response.

5.4 PREFERRED ALTERNATIVE

Based on an evaluation of the four alternatives for the proposed action, Alternative 4 best satisfies the evaluation criteria of effectiveness, implementability, and cost. Under this alternative, contaminants would be removed from the surface waters in a treatment plant constructed adjacent to the raffinate pits, and the process residues would be stored on-site in an existing facility. This alternative would protect human health and the environment and could be implemented in a timely, straightforward, and cost-effective manner. Furthermore, because treatment is included as a principal component, Alternative 4 would support a permanent response to the potential threats associated with the surface waters impounded at the chemical plant area. Finally, the action is consistent with and would contribute to the overall remedial action for the Weldon Spring site. Potential health and environmental impacts associated with implementing this alternative are evaluated in Chapter 6.

As identified in Chapter 1, managing contaminated surface water in the quarry has been addressed as a previous expedited response action for the Weldon Spring project. During the development of alternatives for that action, the possibility of concurrently managing contaminated surface waters from the chemical plant area was also considered. This approach was determined to be infeasible due to the differing contaminant types and concentrations in the surface waters at the chemical plant area (including nitrate, chloride, and cyanide) compared with those in the quarry pond. Hence, even if it were determined reasonable to transport contaminated surface water from one area to the other, e.g., from the chemical plant area to the quarry, the resultant treatment plant would have been over-designed for the quarry conditions, would result in higher waste volumes, and would be much more expensive relative to a plant appropriate for the quarry. Based on potential risks, questionable effectiveness, and higher overall costs for combining the surface water management for the two areas, separate consideration was deemed appropriate. Therefore, if the chemical plant waters were treated in the quarry treatment plant, potential effluent targets (see Chapter 7) would probably not be met. For this reason, a separate treatment plant would be constructed at the chemical plant area to treat contaminated surface waters impounded at this area. This plant would also be available to treat water that may be generated during future cleanup actions at the chemical plant area.

6 POTENTIAL IMPACTS OF IMPLEMENTING THE PREFERRED ALTERNATIVE

Based on the evaluation and comparison of potential alternatives in Chapter 5, the preferred alternative for the proposed action is to pump contaminated surface water from the impoundments at the chemical plant area to a treatment plant constructed adjacent to the raffinate pits. Contaminants would be removed by the treatment system, and the treated water would be released after being tested to ensure compliance with effluent limitations (see Chapter 7). Potential impacts associated with various discharge options for the proposed action are discussed in Section 6.1. Potential health and environmental impacts of implementing the preferred alternative are evaluated in Sections 6.2 and 6.3, respectively. Potential cumulative effects associated with the preferred alternative and other project activities are addressed in Section 6.4.

6.1 DISCHARGE OPTIONS

Six options were considered for releasing treated water from the effluent ponds. Under four of the options, the water would be released to the Missouri River as follows: (1) channel flow in the Southeast Drainage; (2) a buried pipe in the Southeast Drainage; (3) a buried pipe along the ridge of the Southeast Drainage; and (4) a buried pipe along the haul road constructed west of the drainage (along State Route 94) between the chemical plant area and the quarry as part of the quarry bulk waste remedial action (see ANL 1990); this pipe would be connected to the discharge pipe for the quarry water treatment plant. Aboveground pipe discharge options were also considered but were rejected on the basis of technical constraints and costs associated with the tortuous paths that would be followed, required insulation for protection against freezing, and potential damage by wildlife and/or acts of vandalism. Under the other two discharge options, the treated water would be released to the Mississippi River drainage basin as follows: (1) spray irrigation or evaporation ponds and (2) overland flow. These six discharge options are evaluated in Section 6.1.1, and the preferred option for effluent release is identified in Section 6.1.2.

6.1.1 Evaluation of Discharge Options

Under three of the four options for releasing treated water to the Missouri River, the water would be pumped from the effluent ponds to the Southeast Drainage channel at the chemical plant area boundary. From this point, the effluent would flow by gravity through the 2.4-km (1.5-mi) channel to the Missouri River for the first option; the effluent would have to be pumped for the two pipeline options because the grade is nearly level in certain areas of the drainage such that some backflow could otherwise occur. Under the fourth option, effluent would be piped about 5 km (3 mi) down the haul road constructed between the the southern boundary of the chemical plant area and the quarry for transport of the bulk wastes; at the quarry, the proposed effluent pipe would be connected to the discharge pipe of the quarry water treatment plant for the final 2.4-km (1.5-mi) transport distance to the Missouri River. Under the two remaining

options, the treated water would be pumped from the effluent ponds to the western boundary of the chemical plant area for spray irrigation or impoundment in evaporation ponds on adjacent land (fifth option) or for release to a natural drainage channel, with eventual transport to the Mississippi River (sixth option). These six options are evaluated in the following discussion.

Option 1. Under Option 1, treated water would be pumped through an 80-m (90-yd) segment of 15-cm (6-in.) pipe to the boundary of the chemical plant area and released to the Southeast Drainage for gravity flow to the Missouri River. The Southeast Drainage is a natural channel that extends from the chemical plant area boundary to the perimeter fence between the adjacent Army property and the Weldon Spring Wildlife Area. From there, the channel continues in a southeasterly direction across the wildlife area toward its discharge point into the Missouri River. Water tracing studies conducted by the Missouri Department of Natural Resources have identified four losing stream segments in the Southeast Drainage, i.e., water alternately seeps into and resurges from the streambed at four different points. All water lost to the streambed resurfaces in the downstream springs, staying within the drainage boundary; these results indicate that the drainage system is self-contained (Missouri Department of Natural Resources 1989). Additional information on the Southeast Drainage is presented in Appendix A.

The Southeast Drainage currently receives surface runoff from within its drainage boundary, which includes a small portion of the chemical plant area, and effluent from the wastewater treatment plant for the project office building (see Appendix A). The drainage formerly received discharges from the process sewer line during the operating period of the chemical plant. Untreated decant water was released from the raffinate pits, with a composition similar to what is currently ponded in the pits, at rates of up to 14 m^3/d (3,600 gal/d). More than 20 years have elapsed since plant closure, and pit overflows through decant lines following precipitation have not occurred for almost 10 years. The contamination in the Southeast Drainage that resulted from past discharges has been reduced by storm water runoff over time (additional information is presented in Appendix A).

The treated water released to the Southeast Drainage under the proposed action would be of higher quality and would flow at a lower rate than current storm water flows in the drainage (see Chapter 7 and Appendix A). The effluent flow rate would be about 160 gpm during batch discharge, averaging 80 gpm over the year, compared with several thousand gpm for storm water flows. The discharge rate from the project office wastewater treatment plant, which is also of high quality, averages only about 3 to 5 gpm (see Appendix A). Based on the water quality and flow rate of the effluent compared with current storm flows, contaminant deposition or uptake in the Southeast Drainage is expected to be minimal. Similarly, no channeling impacts are expected to result from the proposed release based on both the physical nature of the drainage (e.g., generally rocky and already channeled, due to historical and current flows) and the projected low flow rate compared with current storm flows in the drainage. Hence, the water quality and physical characteristics in the drainage channel would not be adversely impacted by Option 1. In addition, this discharge option could be implemented in a very straightforward and cost-effective manner.

Option 2. Under Option 2, treated water would be pumped to the Missouri River through a 15-cm (6-in.) pipe buried about 1 m (3 ft) below the ground surface in the Southeast Drainage. The technical implementation of this option would be constrained by the steep and rocky terrain of the drainage, and considerable manpower and equipment allocations would be required. The cost of this option would be much higher than that of Option 1 due to construction, pipe placement, and pipeline monitoring and maintenance requirements. Pipe placement alone could cost about $0.3 million. Most importantly, significant adverse environmental impacts could occur if this discharge option is implemented.

Considerable habitat destruction would result from the clearing, trenching, and rock-cutting activities required for pipe burial, and wildlife and vegetation in the Southeast Drainage would be displaced or destroyed. Similar adverse environmental impacts would result from construction of the access path that would be required along the length of the drainage for pipeline monitoring and maintenance activities during the operational period of the proposed treatment plant. Further, construction and pipe emplacement activities in the drainage would result in modification of the stream channel, increases in sediment loading to the Missouri River, and airborne particulate releases. Adverse impacts to archeological resources in the drainage are also likely to occur. Although DOE has obtained an easement for the Southeast Drainage from the Missouri Department of Conservation, the surrounding land is managed as wildlife area. Hence, the significant adverse environmental impacts sustained in the Southeast Drainage could also impact adjacent land use.

Option 3. Under Option 3, treated water would be pumped along the ridge of the Southeast Drainage through a buried pipe, similar to Option 2. Implementation constraints would be similar to those for Option 2, as would costs. Potential adverse environmental impacts would be generally similar to those for Option 2, except those associated with channel modification. Although the stream channel would not be directly modified under Option 3, sedimentation in the channel could increase due to erosion during construction and pipe placement activities on the ridge.

Option 4. Under Option 4, treated water would be pumped through a buried pipe along the haul road constructed between the chemical plant area and the quarry as part of the quarry bulk waste remedial action (see ANL 1990). The cost of Option 4 is expected to be greater than Options 2 and 3 based on additional piping, installation, and maintenance requirements (the total distance over which the connecting pipe would be required is more than twice the length of the Southeast Drainage). Technical constraints related to grade and subsurface materials would be similar to those for Options 2 and 3 along certain portions of the route. The haul road easement is very narrow and would be concurrently used by truck traffic from the quarry during part of the operational period. Because the distance over which adverse impacts could potentially occur would be more than double that for Options 1-3, construction of the necessary adjacent access route for pipeline monitoring and maintenance and its use over the operational period of the plant would result in increased environmental disturbance.

Option 5. Under Option 5, treated water would be pumped onto a nearby land surface for spray irrigation or for evaporation in ponds. This approach is constrained by local environmental conditions (i.e., the general net balance between precipitation and evaporation) and the limited area of land available to receive the required effluent volume. Furthermore, this option would cost more than the other options, due to construction and operating costs (including monitoring and maintenance).

For spray irrigation, much of the land within the chemical plant area is excluded from consideration because the water would percolate through contaminated soil and could entrain surface contaminants, thereby reversing the benefits of the original treatment. The same constraints are true for the adjacent Army property because that land is also contaminated (see Section 2.1). In addition, availability of this adjacent land is constrained by administrative difficulties because it is not owned by DOE. Further, the land dedicated to spray irrigation may be intermittently unable to receive the water at the required rate, e.g., due to saturated or frozen conditions.

Similar difficulties are associated with releasing the treated water to evaporation ponds. Land availability at the chemical plant area is limited and would be insufficient to provide the evaporation capacity required for the estimated volume of treated water that would be produced; adjacent land use is constrained by administrative factors. Most importantly, the success of evaporation is strongly dependent on meteorological conditions such as temperature, amount of cloud cover, and relative humidity. Effectiveness and implementability would be constrained by the environmental conditions in the area, including low net evaporation rates, relatively cold winters, and humid summers. The addition of mechanical sprayers and dryers to enhance evaporation at the ponds would be prohibitively expensive.

Option 6. Under Option 6, treated water would be pumped to the western boundary of the chemical plant area and released into the Mississippi River drainage basin as overland flow. The effluent would probably flow as follows: first to an unnamed tributary of Schote Creek, then northward into Schote Creek to Lake 35 in the Busch Wildlife Area; Lake 35 has been losing water to the subsurface since its construction (MK-Ferguson Company and Jacobs Engineering Group 1988). If the effluent left Lake 35 as overflow, it would enter Schote Creek, which joins Dardenne Creek about 6 km (3.7 mi) northeast of the chemical plant area. Both Schote Creek and its unnamed tributary lose water to the subsurface; this subsurface flow resurfaces at Burgermeister Spring (Dean 1985) and flows into Lake 34 in the Busch Wildlife Area. Outflow from Lake 34 enters an unnamed tributary of Dardenne Creek; Dardenne Creek flows northward through the towns of St. Peters and St. Charles and eventually flows into the Mississippi River.

Dye-tracing studies conducted by the Missouri Department of Natural Resources have identified a complicated and extensive system of groundwater-surface water exchanges in the Mississippi River drainage system (Missouri Department of Natural Resources 1989). Because the effluent would flow through recreational and residential areas, administrative difficulties could be associated with implementing Option 6.

Hence, the cost of Option 6 could be higher than that of other options due to potentially extensive monitoring requirements.

6.1.2 Identification of Preferred Discharge Option

The evaluation of potential options for releasing effluent from the proposed treatment plant can be highlighted as follows:

- Adverse environmental impacts would be minimized under Option 1 -- surface (channel) flow in the Southeast Drainage; this option could be implemented in a straightforward and cost-effective manner.

- Implementation constraints and significant adverse environmental impacts are associated with the three buried pipe options: Option 2 -- burial within the Southeast Drainage, Option 3 -- burial on the ridge of the drainage, and Option 4 -- burial along the quarry bulk waste haul road, with a connection to the discharge pipe of the quarry water treatment plant; these options would also be much more expensive than Option 1.

- Technical and administrative constraints are associated with Option 5 -- spray irrigation or evaporation ponds.

- Administrative constraints are associated with Option 6 -- overland flow in the Mississippi River drainage basin.

Based on this analysis, Option 1 -- surface flow in the Southeast Drainage -- has been identified as the preferred option for effluent release.

6.2 HEALTH IMPACTS

Health impacts to workers could potentially occur during the proposed construction, pumping, treatment, and storage activities at the chemical plant area. Potential exposure to airborne emissions during these activities is expected to be greater for workers than for the general public. All activities associated with the proposed action would be conducted in accordance with health and safety plans for the Weldon Spring site to ensure worker protection. Therefore, the potential for occupational exposure to contaminants by direct contact, ingestion, or inhalation is expected to be minimal. Air would be monitored during the action period; if monitoring results indicated a potential occupational exposure threat, additional mitigative measures (e.g., the use of personal air filters) would be implemented to ensure worker health and safety. Hence, the health impacts to workers are expected to be minor.

Based on safe practices that have been implemented for similar activities, the handling of process wastes from the treatment plant is not expected to pose an

occupational threat to workers. Workers would be trained with regard to radiation risks and proper health-physics practices; appropriate operating procedures would be followed to ensure that doses to workers would be kept to levels as low as reasonably achievable below those specified in health-based standards. The surface exposure rate from containerized process residues is estimated to be about 0.1 mR/h, based on an annual volume generation of about 340 m^3 (440 yd^3) (see Chapter 7). Radium-226 and radium-228 are the major contributors to this exposure rate.

Health impacts to the local population could also potentially occur during construction, pumping, treatment, and storage activities at the chemical plant area during the proposed action. The improvement of institutional controls would limit public (i.e., trespasser) exposure through direct contact, ingestion, or inhalation. Air would be monitored for radon and particulates during the action period, and mitigative measures would be taken as needed to ensure public health and safety. For example, the work area would be limited and surfaces would be wetted to control airborne releases. Hence, potential impacts to public health associated with these activities are expected to be insignificant.

Potential impacts to public health associated with the proposed release of treated water to the Missouri River have also been evaluated. Contaminants would be removed from the influent surface waters in the proposed treatment plant such that the treated water would meet discharge limits identified in a National Pollutant Discharge Elimination System (NPDES) permit issued to DOE by the state of Missouri; these limits are established on the basis of health and environmental protection. Although reference levels are available for chemical and certain radioactive contaminants in the surface waters that will be treated under the proposed action, no federal or state requirements exist for uranium. Hence, the following analysis is limited to the risks associated with residual uranium in the treated water released to the Missouri River via the Southeast Drainage.

The concentration of uranium in the treated water would be maintained below 100 pCi/L (see Section C.5 in Appendix C). Because flow in the Southeast Drainage is sometimes negligible (i.e., during dry periods), it is conservatively assumed that the treated water containing uranium at a concentration of 100 pCi/L could be ingested by an individual passing through the area, e.g., a hiker or hunter. Other potential exposure routes associated with the drainage, such as ingestion of contaminated plant foods or inhalation, would be insignificant contributors to the total dose relative to the water-ingestion pathway.

The likelihood of incidental ingestion is expected to be low. However, to quantify potential impacts, the dose and risk associated with a potential "recreational" exposure scenario is assessed. For this assessment, it is assumed that an individual walks along the drainage once a week from May through September each year for a total of 10 years, ingesting 0.2 liters of water from the drainage, as available, during each walk. Because the effluent would be released by batch discharge (see Chapter 7), it is expected that the treated water would be flowing in the drainage during only one-half of the potential exposure events.

The incremental annual radiation dose (i.e., the dose received from potential action-related exposure that is in addition to the dose from background radiation) that would result from ingesting treated water from the drainage containing 100 pCi/L of uranium is estimated to be about 5.7×10^{-5} rem, using 50-year committed effective dose equivalent conversion factors (Gilbert et al. 1989). Applying the risk factor of 1.65×10^{-4}/rem for the induction of fatal cancers and serious genetic effects in the first two generations following radiation exposure (International Commission on Radiological Protection 1979), the incremental annual risk to an individual from this incidental ingestion is about 9.4×10^{-9}. The lifetime incremental risk would be about 9.4×10^{-8} assuming 10 years of exposure.

In addition to the recreational-exposure assessment, the dose and risk to a maximally exposed individual resulting from routine exposures (i.e., those considered more likely to occur) was also assessed. These routine exposures are associated with the Missouri River because the Southeast Drainage empties into the river. The two potential exposure routes that would comprise the major contribution to radiation exposure from the river are ingestion of drinking water and ingestion of fish. In this analysis, the dose and risk resulting from the recreational exposure scenario are treated separately and are not combined with the doses and risks from the other (routine) exposure scenarios because the likelihood that the recreational exposure would occur is low.

When the treated water flows from the Southeast Drainage into the Missouri River, the uranium concentration would be rapidly reduced. The concentration of uranium in the river is determined by its concentration in the effluent and by the flow rate of both the effluent and the river. The uranium concentration of the effluent will not exceed 100 pCi/L (see Section C.5), and the annual discharge rate is expected to average about 0.005 m^3/s (0.17 ft^3/s) (see Chapter 7). Therefore, the annual inventory of uranium that would be received by the Missouri River during one year of plant operation (i.e., 325 days, see Chapter 7) is estimated to be 0.014 Ci.

By 1970, the last of the current upstream dams had been put in place on the Missouri River. Measurements of the river's flow rate documented from 1970 to 1985 range from about 420 to 11,200 m^3/s (15,000 to 400,000 ft^3/s) and consistently exceed 280 m^3/s (10,000 ft^3/s). In fact, over 99% of these recorded flow rates exceed 700 m^3/s (25,000 ft^3/s) (Bedan 1988). For this risk analysis, the volumetric flow rate of the Missouri River is conservatively assumed to be 280 m^3/s (10,000 ft^3/s). Thus, the average incremental uranium concentration in the river following its receipt of the effluent flow is estimated to be about 0.0018 pCi/L. This concentration is insignificant relative to the background level of uranium in the river; the background concentrations measured at the Weldon Spring boat launch ramp, the Jefferson City boat ramp, and the McBaine area (Boone County) are 2.4 pCi/L, 2.8 pCi/L, and 3.6 pCi/L, respectively (Bedan 1989).

Water flows into the Missouri River from the Southeast Drainage at river mile 47 from the confluence with the Mississippi River. The nearest water-supply intakes are located about 16 km (10 mi) downstream, at mile 37 from the confluence and on the opposite side of the Missouri River. These intakes serve two water treatment plants that are adjacent to each other at mile 37: (1) Hog Hollow Water Treatment Plant of St. Louis County, a privately owned utility, and (2) Howard Bend Water Treatment Plant

of the city of St. Louis, a municipally owned system. A third intake is located about 42 km (26 mi) downstream from the effluent release, at mile 21 from the confluence with the Mississippi River. This is the intake of the Florissant Water Treatment Plant of St. Louis County, a private water supply. A fourth water treatment plant that could potentially be affected by the release of residual uranium to the Missouri River is the municipal Chain of Rocks plant, which is located on the Missouri side of the Mississippi River about 6.4 km (4 mi) downstream of its confluence with the Missouri River. Although the intake for this plant is located on the Mississippi River, it is conservatively assumed that due to its proximity to the Missouri River, the two flows have not yet mixed. Therefore, the uranium concentration at this intake is assumed to be the same as that at the three intakes on the Missouri River. The combined population that could be served by these four treatment plants is about 1.5 million persons (Mazur 1988). Thus, the total population potentially affected by the proposed action through drinking-water ingestion is conservatively estimated to be 2 million persons.

For the drinking-water ingestion pathway, it is assumed that uranium is neither entrained nor settled on the river banks or bed, so that all of the uranium discharged to the river contributes to the concentration in the water that is withdrawn downstream for use as drinking water. However, some entrainment/deposition of uranium is likely because the Missouri River is fairly turbid and traverses a convoluted path; also, the effluent is discharged across the width of the river from the intakes and at the bank rather than at mid river. Therefore, the total incremental uranium concentration at the intakes of the water treatment plants would probably be significantly lower than the 0.0018 pCi/L derived from the above assumptions. However, neither these factors nor the potential of the lime-softening process used in these plants to provide additional uranium-removal capability have been incorporated in the analysis. Thus, the assumptions upon which the river drinking-water risk estimate is based are conservative.

The incremental dose to the maximally exposed individual is calculated for an individual ingesting drinking water from the river that contains an incremental 0.0018 pCi/L of uranium, at a rate of 410 L/yr (Gilbert et al. 1989). The incremental dose received from this ingestion is about 1.9×10^{-7} rem/yr. The incremental health risk corresponding to this dose is about 3.2×10^{-11}/yr, and the incremental lifetime risk is about 3.2×10^{-10}, based on the assumption that the water treatment plant would operate for 10 years.

For the fish-ingestion pathway, it is assumed that the maximally exposed individual annually consumes 5.4 kg of fish (Gilbert et al. 1989) whose habitat was restricted to an area of the Missouri River near the outflow of the Southeast Drainage. The uranium concentration in this area could be somewhat greater than 0.0018 pCi/L due to incomplete dilution. Also, any suspended material that might be entrained in the effluent could settle to the river bottom in the immediate area and subsequently become re-entrained. Thus, it is assumed for this analysis that the fish inhabited water containing a uranium concentration 100 times greater than that of the fully mixed flow, or 0.18 pCi/L. Using the bioaccumulation factor of 2 L/kg for freshwater fish (Gilbert et al. 1989), the maximally exposed individual would receive an incremental dose of 5.1×10^{-7} rem/yr from this pathway. The incremental annual risk associated with this dose is 8.3×10^{-11}/yr, and the incremental lifetime risk is 8.3×10^{-10}, assuming 10 years of plant operation.

The maximally exposed individual would receive an annual dose of about 7.0×10^{-7} rem/yr from routine exposure through the ingestion of fish (5.1×10^{-7} rem/yr) and drinking water from the river (1.9×10^{-7} rem/yr). Combining the incremental annual risk from fish ingestion (8.3×10^{-11}/yr) with the risk for ingestion of drinking water supplied from the river (3.2×10^{-11}/yr), the total incremental annual risk to the maximally exposed individual from routine exposure is about 1.2×10^{-10}/yr. (For comparison, this risk is a very small fraction [about 1/10,000] of the risk that an individual will be struck by lightning in a given year.) The total incremental lifetime risk to the maximally exposed individual for these two exposure scenarios is about 1.2×10^{-9}.

To estimate population doses, the contributive exposure scenarios are (1) ingestion of drinking water from the water treatment plants with intakes on the Missouri River and on the Mississippi River near the confluence of the rivers and (2) ingestion of fish from the Missouri River. For the river drinking-water pathway, it is assumed that the population of 2 million supplied by the four treatment plants downstream of the effluent release would ingest a total of 820 million liters of water, resulting in a population dose of about 3.8×10^{-1} person-rem/yr. The incremental annual risk to the population corresponding to this dose is about 6.3×10^{-5}/yr, and the incremental lifetime risk is about 6.3×10^{-4}.

To estimate the population dose that could result from ingesting fish harvested from the Missouri River, it is assumed that the population consumes all of the fish caught downstream of the effluent release (i.e., between the discharge point and the confluence with the Mississippi River). It is also assumed that the uranium concentration in this 75-km (47-mi) stretch of river averages 0.0018 pCi/L and that the fish have inhabited this water throughout their lifespans. Approximately 136,500 fish/yr are harvested from the Missouri River between mile 144 and the confluence with the Mississippi River due to recreational and commercial fishing combined (Fleener 1988). From this total, it is estimated that 45,000 fish are harvested from the Missouri River between the Southeast Drainage outflow (mile 47) and the Mississippi River (mile 0). Conservatively assuming that the average edible portion of these fish is about 2.5 kg (5 to 6 lb), the total edible amount of fish harvested over this distance is estimated to be 112,500 kg (247,500 lb). Using the uranium bioaccumulation factor of 2 L/kg for freshwater fish, the estimated population dose resulting from fish ingestion is 1.1×10^{-4} person-rem/yr. This dose corresponds to an incremental annual risk of about 1.7×10^{-8}/yr and an incremental lifetime risk of about 1.7×10^{-7}. Combining the incremental annual population risk from the ingestion of drinking water (6.3×10^{-5}/yr) and the ingestion of fish (1.7×10^{-8}/yr) associated with the Missouri River, the total incremental annual risk to the exposed population is about 6.3×10^{-5}. The total incremental lifetime risk to the population is about 6.3×10^{-4}, assuming 10 years of plant operation.

The potential doses and risks associated with the proposed action are summarized in Table 5. For the recreational-exposure scenario, the annual dose and incremental risk associated with incidental ingestion of undiluted effluent from the Southeast Drainage are 5.7×10^{-5} rem and 9.4×10^{-9}, respectively. For routine exposures, the dose to the maximally exposed individual is about 7.0×10^{-7} rem/yr; the resultant incremental lifetime risk would be about 1.2×10^{-9}. The EPA-recommended target value for an

TABLE 5 Estimated Incremental Radiation Doses and Incremental Risks

Exposure Scenario	Exposure Pathway	Annual Dose[a]	Incremental Annual Risk	Incremental Lifetime Risk
Recreational Exposure				
Maximally exposed individual	Drinking treated water from the Southeast Drainage	5.7×10^{-5}	9.4×10^{-9}	9.4×10^{-8}
Routine Exposure				
Maximally exposed individual	Drinking water from river	1.9×10^{-7}	3.2×10^{-11}	3.2×10^{-10}
	Ingesting fish from discharge area	5.1×10^{-7}	8.3×10^{-11}	8.3×10^{-10}
	Total	7.0×10^{-7}	1.2×10^{-10}	1.2×10^{-9}
Population	Drinking water from river	3.8×10^{-1}	6.3×10^{-5}	6.3×10^{-4}
	Ingesting fish from river	1.1×10^{-4}	1.7×10^{-8}	1.7×10^{-7}
	Total	7.9×10^{-1}	6.3×10^{-5}	6.3×10^{-4}

[a]For the maximally exposed individual, the units are rem/yr; for the exposed population, the units are person-rem/yr.

incremental individual lifetime risk for all cancers is 1×10^{-6}, and the target risk range is 1×10^{-4} to 1×10^{-6} (EPA 1990b). Hence, the potential risks estimated to result from this action are considerably below EPA's recommended target.

In addition to considering the EPA-recommended target risk value, it may be useful and appropriate to compare the incremental individual radiation risks associated with the proposed action to the risks resulting from background environmental radiation. Exposure to natural sources of radiation -- such as radon, terrestrial radiation, and cosmic rays -- results in a background effective dose equivalent of about 0.3 rem/yr (National Council on Radiation Protection and Measurements 1987), which translates to a lifetime individual radiation risk of about 3×10^{-3}. Thus, the estimated incremental lifetime risk to the maximally exposed individual resulting from routine exposure is a very small fraction (about 1/2,500,000) of the individual risk due to background radiation. The estimated incremental lifetime risk to the exposed population is about 1/11,000,000 of the risk to that population from background radiation.

6.3 ENVIRONMENTAL IMPACTS

The overall environmental impact of implementing the proposed action would be beneficial because the contaminated surface waters impounded at the chemical plant area would be removed and treated, thereby eliminating the potential for exposures to and uncontrolled releases of contaminants from these waters into the nearby environment. The potential environmental impacts associated with constructing the proposed treatment plant, pumping water to the plant, and temporarily storing process residues are expected to be minor.

The impact to soils would involve temporary disturbance of localized areas dedicated to the construction of the water treatment facility, including laydown areas. The total area affected is estimated to be about 0.7 ha (1.6 acres), much of which has been disturbed as a result of past activities at the chemical plant.

The current condition of water resources at the chemical plant area would improve because the contaminated waters would be removed and treated. Treatment plant construction activities could result in increased concentrations of suspended solids in nearby surface waters (e.g., off-site drainages) in the short term. To minimize the potential for such impact, good engineering practices would be followed and mitigative measures such as surface contouring and sediment barriers would be implemented to control erosion.

The construction, pumping, and storage activities at the chemical plant area could potentially impact air quality. The potential for dust generation would be minimized by limiting the size of the work area and the volume of vehicular traffic and by implementing good engineering practices, such as wetting exposed soil surfaces during the construction period. Airborne releases of contaminants could also potentially occur during pumping, treatment, and storage activities; air would be monitored and mitigative measures such as system enclosure would be implemented to control potential releases. Because airborne releases would be controlled, animals and vegetation are not likely to receive any significant exposure to airborne contaminants at the chemical plant area.

Adverse impacts to vegetation and wildlife related to noise, dust, or visual disturbance during the proposed activities at the chemical plant area are expected to be minimal due to the small affected area and the limited duration of the activity. The area that would be affected by the proposed treatment plant is negligible in size relative to the 6,000 ha (15,000 acres) of nearby wildlife area. Disturbance of habitats could displace mobile wildlife and destroy local vegetation. However, the chemical plant area does not provide unique wildlife habitat, and the distribution of plant species is not restricted; the disturbed habitats could be repopulated following the action period. No impacts to endangered or threatened species are anticipated at the chemical plant area because this area does not provide any critical habitat for such species.

Potential environmental impacts could also be associated with release of the treated water to the Southeast Drainage, with discharge to the Missouri River. No impacts to air quality are expected during discharge because airborne emissions from the treated water would be negligible. Potential impacts to the river include changes in the physical and chemical nature of the system. The flow rate and volume of the release would be very small compared with those of the Missouri River (see Section 6.2), so no significant channeling or chemical changes are expected to occur. The water would be extensively treated prior to discharge (see Chapter 7 and Appendix C); therefore, compared with the water quality of the Missouri River, the effluent water quality would be higher for chemical parameters and the uranium contribution would be insignificant upon discharge (e.g., less than 1/1,000 of the background level of 2.4 pCi/L in the river near the discharge point [Bedan 1989]). Limited adsorption, precipitation, or deposition of suspended solids may occur at the discharge point, i.e., where the Southeast Drainage meets the Missouri River. However, the water quality and regularity of effluent flow would minimize potential impacts. Because the treated water would meet stringent discharge requirements based on ensuring protection of human health and the environment, no adverse environmental impacts to the river are expected to result from effluent release.

Environmental impacts could also occur within the Southeast Drainage channel. Potential impacts to soils and sediments in the Southeast Drainage include incremental channeling of the drainage bed and chemical deposition. However, channeling is not expected based on the low effluent flow rate and volume compared with current flows in the drainage. Current site discharges to the Southeast Drainage include storm water from on-site drains that feed the old process sewer and surface runoff from the southeast portion of the chemical plant area; this portion of the site comprises only about 6% of the total drainage area of the Southeast Drainage (see Appendix A). Current storm flows in the drainage can exceed several thousand gallons per minute, and the flow rate of the treated water is not expected to exceed about 160 gpm during batch discharge. Hence, the effluent flow rate would be much lower than flows that frequently occur following precipitation. Because the treated water would flow entirely within the channel, no increased erosion or changes in bank vegetation are likely to occur. Sediments could potentially be affected if particulates that may be entrained in the effluent or formed following chemical transformations in the channel are deposited on the drainage bed. However, the high quality of the effluent combined with the generally steep grade of the drainage channel limits the likelihood of these impacts.

If the treated water were discharged when storm flows were occurring in the drainage, the effluent flow rate would probably be exceeded by the natural flows and the effluent water quality would be higher. Results of a recent study indicated that uranium concentrations in the four springs of the Southeast Drainage ranged from 80 to 280 pCi/L, with an average of 177 pCi/L (see Appendix A). In contrast, the uranium concentration in the effluent from the proposed treatment plant would not exceed 100 pCi/L. If the treated water were discharged during dry periods, deposition or uptake could potentially occur because flow in the drainage would be comprised essentially of this water (effluent from the project office wastewater treatment plant only averages about 5 gpm). However, the likelihood of such impacts is low based on the water quality and flow rate of the effluent and the nature of the drainage grade, including general steepness. Hence, no adverse impacts to vegetation and wildlife in the drainage are expected to result from the proposed action.

6.4 POTENTIAL CUMULATIVE IMPACTS

The potential cumulative impacts associated with actions currently planned for the Weldon Spring site were assessed to ensure that the sum of the impacts associated with each individual action would not result in an unacceptably high overall threat to human health and the environment. Two major activities are currently planned for the chemical plant area: (1) construction and operation of a water treatment plant for managing the contaminated water in the surface impoundments (addressed in this document) and (2) construction and operation of a temporary storage area (TSA) for the bulk wastes excavated from the quarry (addressed in an RI/FS that has been prepared for this interim remedial action; see Chapter 1 of this document). A third activity, which has been planned for the quarry, is the construction and operation of a treatment plant for managing the contaminated water in the quarry pond (addressed in a separate EE/CA; see Chapter 1 of this document). That activity would contribute to potential cumulative effects with the currently proposed action because the Missouri River would be the receiving body for effluent from both of the water treatment plants. Cumulative health effects associated with these three activities are addressed in Section 6.4.1; cumulative environmental effects are addressed in Section 6.4.2. An assessment of cumulative impacts associated with future response actions at the Weldon Spring site will be presented in future environmental compliance documents (i.e., in the RI/FS-EIS for activities at the chemical plant area and in separate documentation for follow-on activities at the quarry area).

6.4.1 Health Impacts

Potential impacts to human health associated with the TSA for the quarry bulk waste remedial action were assessed in the FS prepared for that action (see ANL 1990). The primary pathways of potential exposures for the general public associated with the bulk waste activities at the chemical plant area are (1) inhalation of radon-222 and its short-lived decay products and (2) inhalation of radioactively and chemically contaminated dusts. Two scenarios were evaluated to address potential exposures of the general public resulting from TSA construction and operation activities and to assess associated

radiological risks and chemical carcinogenic and noncarcinogenic risks. These scenarios are as follows: (1) an office worker at the on-site office building and (2) a student at Francis Howell High School. The estimated total incremental lifetime radiological carcinogenic risks (i.e., the increased likelihood of incurring a fatal cancer) for these two scenarios are 1.6×10^{-7} and 2.1×10^{-8}, respectively. The estimated total incremental chemical carcinogenic risks, i.e., the increased likelihood of incurring a cancer are 1.0×10^{-8} and 6.8×10^{-10}, respectively. In comparison, about one in three Americans will eventually develop cancer, and it is estimated that 60% of all cancers are fatal (American Cancer Society 1988). Hazard indexes for noncarcinogenic chemical risks for the office worker and student are 4.1×10^{-4} and 2.7×10^{-5}, respectively. (A hazard index is the ratio of the estimated daily intake of a contaminant to the reference dose; a reference dose represents the average daily dose that can be incurred without likely adverse health effects, assuming chronic exposure. A hazard index of greater than one indicates a potential for adverse health effects.)

Potential health impacts to the general public associated with the proposed quarry water treatment plant were assessed in the EE/CA prepared for that action (see MacDonell et al. 1989). In that EE/CA, two scenarios were evaluated for routine exposures and potential risks associated with residual uranium: (1) ingestion of fish from the Missouri River and (2) ingestion of drinking water from the Missouri River. (Potential risks associated with chemical contaminants were not quantified because the concentrations of those contaminants are to be maintained at or below levels established in the permit issued to DOE by the state of Missouri for the effluent release; these levels are developed on the basis of health and environmental protection.) The estimated incremental risk to a member of the general public from exposure via these pathways is 4.6×10^{-11}/yr, which corresponds to an incremental lifetime risk of 4.6×10^{-10}, assuming 10 years of plant operation. The same scenarios were evaluated for the currently proposed action, and potential health risks are estimated in Section 6.2 of this EE/CA.

Cumulative effects for the general public associated with the quarry bulk waste action and the two water treatment actions were conservatively estimated by assuming that an individual could be impacted by all three response actions during the overlap of operational periods (see Chapter 1 and Section 3.3). The risks estimated for the water treatment actions are much lower than those estimated for the quarry bulk waste action. Hence, the cumulative risk for this individual is represented by those associated with TSA activities for the quarry bulk waste remedial action, and no significant cumulative health effects are expected to result from implementing the water treatment actions.

Following the close of the action period for the TSA, potential impacts would decrease to those levels associated with the water treatment actions. The cumulative incremental risk associated with the effluent releases would not be completely additive because conservative assumptions were used to estimate exposure from fish ingestion. That is, the fish were assumed to have inhabited water at the discharge point with a uranium concentration 100-fold higher than the mixed waters downstream. This concentration assumption is only appropriate for the two specific discharge locations, which are about 1.6 km (1 mi) apart (see Figure 7). Therefore, the same fish could not be

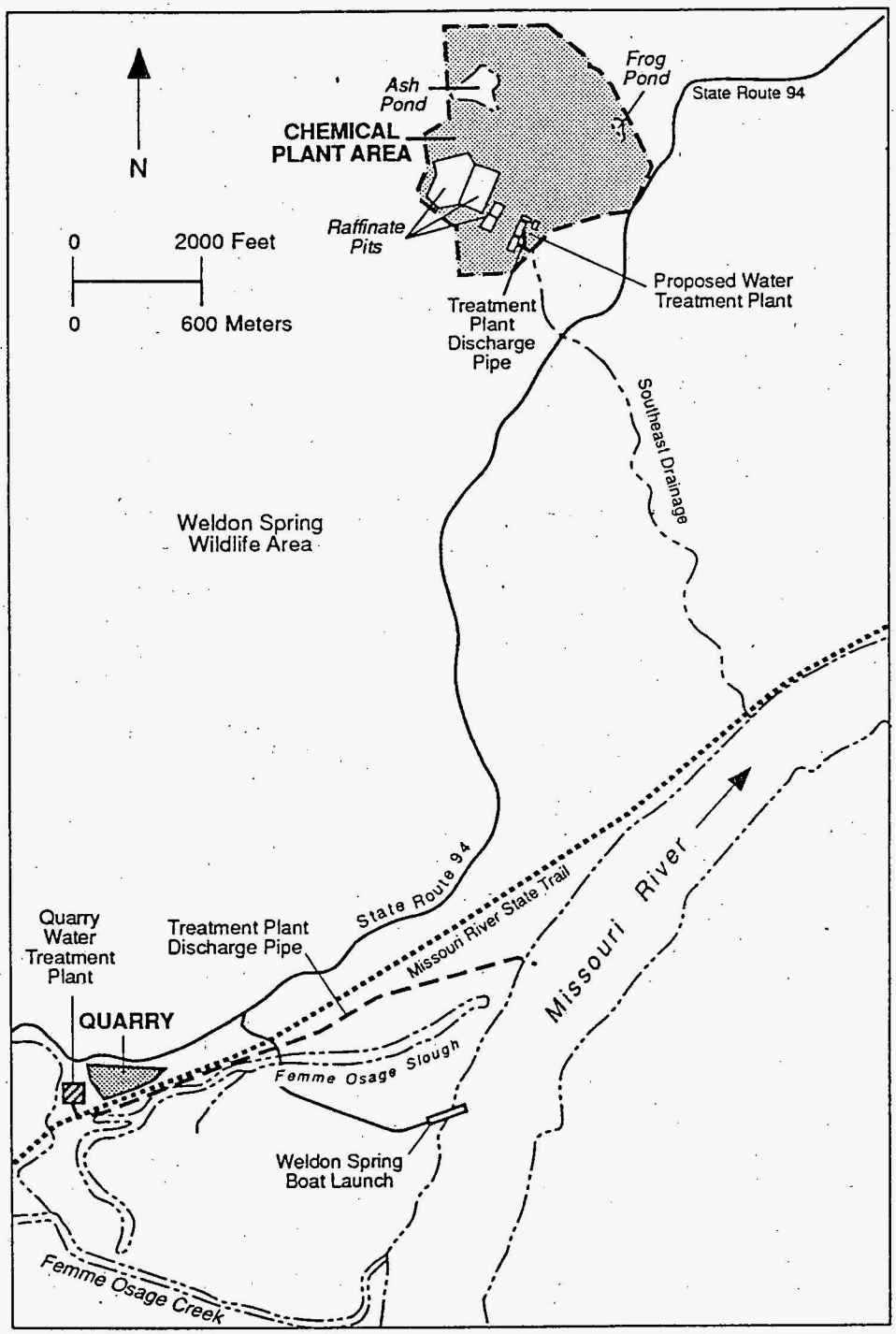

FIGURE 7 Location of the Proposed Discharges for the Two Water Treatment Plants

concurrently exposed to additive concentrations. Hence, the total incremental cumulative risk following the action period at the TSA would be the sum of those identified for ingesting river water for the two treatment actions (i.e., 4.5×10^{-11}/yr) and the more conservative of the two identified for fish ingestion (i.e., 8.3×10^{-11}/yr). Assuming 10 years of plant operation, the lifetime incremental cumulative risk to the maximally exposed individual would be about 1.3×10^{-9}.

Cumulative health impacts to workers were also assessed for the quarry bulk waste action and the quarry and chemical plant area water treatment actions. The estimated incremental lifetime radiological and chemical carcinogenic risks to workers associated with TSA activities for the bulk waste response action are 1.1×10^{-4} and 2.9×10^{-5}, respectively. The hazard index for noncarcinogenic chemical risk is 4.2. (Both the carcinogenic and noncarcinogenic chemical risks were conservatively estimated based on a maximally exposed worker within the quarry who does not use respiratory protection equipment.) All activities associated with the proposed management of quarry and chemical plant area waters would be conducted in accordance with (1) health and safety plans for the site and (2) health-based regulatory requirements. Based on the nature of the water treatment actions, generation of contaminated dusts would be relatively minor, and gaseous releases would also be low. Mitigative measures such as limiting the work area and wetting surfaces would be implemented to control airborne releases and potential exposures. Hence, potential worker impacts are expected to be much lower for these two treatment plant actions than for the quarry bulk waste remedial action, and the cumulative impacts to workers are represented by those estimated for the bulk waste action during the overlap of the respective operational periods. Following the close of the action period for the TSA, impacts would be limited to those associated with the two water treatment actions and would therefore be minimal.

In summary, no significant cumulative health effects are expected to result from implementing the proposed action to manage contaminated water from impoundments at the chemical plant area concurrent with the similar management of water in the quarry pond and the construction and operation of a controlled storage area for the quarry bulk wastes.

6.4.2 Environmental Impacts

Potential environmental impacts associated with the TSA for the proposed quarry bulk waste remedial action were addressed in the FS prepared for that action (see ANL 1990), and those associated with the proposed quarry water treatment action were addressed in the EE/CA prepared for that action (see MacDonell et al. 1989). Cumulative environmental impacts could potentially result from constructing the TSA and the water treatment plants. Construction impacts would be short term, would influence only the immediate area of the combined construction sites, and would be mitigated by such measures as limiting the work area and using sediment barriers for erosion control. The total disturbed area would increase from about 5.3 ha (13.0 acres) for the TSA alone to 6.0 ha (14.6 acres) for the TSA and water treatment plant at the chemical plant area. However, the affected area has been disturbed by past activities, is actively mowed, does

not provide unique wildlife habitats or contain species restricted in distribution, and is very small compared with the surrounding wildlife area (see Section 6.3).

Incremental cumulative impacts from constructing the quarry water treatment plant are expected to be negligible. This construction would be completed prior to the start of any activities related to the TSA or the water treatment plant at the chemical plant area; the 5.6 ha (14 acres) disturbed for the treatment plant at the quarry would not alter the total land area disturbed at the chemical plant area. Hence, the cumulative environmental impacts of construction activities are expected to be minor.

Potential impacts of operating the TSA and the water treatment plant at the chemical plant area would be minimal because the facilities would be designed and managed to mitigate potential adverse impacts. For example, emissions would be controlled with engineering measures for both activities, and monitoring systems and contingency plans would be in place to ensure environmental protection. The primary potential impact would be associated with the release of treated waters to the Missouri River from the two water treatment plants. Cumulative impacts to the river would be negligible because the waters would have been extensively treated and the effluent flow rates and volumes would be insignificant relative to those of the river. Cumulative impacts associated with the discharges before they reach the river would also be negligible because the water quality would be high and the effluents would be released from the two treatment plants by separate routes. The quarry treatment plant effluent would be released from a pipe into the Missouri River, and effluent from the chemical plant area treatment plant would be released from a short segment of pipe to a natural drainage channel that empties into the Missouri River about 2.4 km (1.5 mi) downstream of the quarry discharge point.

Potential environmental impacts to these discharge routes related to biological uptake are expected to be negligible because the water would have been treated prior to discharge to meet stringent effluent levels established on the basis of health and environmental protection. Potential impacts related to physical disturbance would also be minor. For the quarry treatment plant discharge, only a small amount of land would be temporarily disturbed by the placement of the 10-cm (4-in.) diameter discharge pipe over a distance of about 2.4 km (1.5 mi); this land has been previously disturbed by agricultural activities. Only a minor construction impact would occur for the discharge from the treatment plant at the chemical plant area treatment plant; a 15-cm (6-in.) diameter pipe would be placed over a distance of about 80 m (90 yd) at the chemical plant area (also previously disturbed land) to transport water from the effluent ponds to the Southeast Drainage. The treated water would be released down the natural drainage channel at a rate lower than occurs naturally after rainstorms, so no incremental channeling is expected to occur.

In summary, no significant cumulative environmental impacts are expected to result from implementing the proposed action to manage contaminated water impounded at the chemical plant area concurrent with the similar management of contaminated water in the quarry pond and the construction and operation of a controlled storage area for the quarry bulk waste action.

7 DESIGN BASIS FOR THE TREATMENT PLANT

Implementation of the preferred alternative would require the design and construction of a treatment plant for the contaminated surface waters impounded at the chemical plant area (see Section 5.4). The proposed water treatment plant would be constructed in the southeast portion of the chemical plant area, east of raffinate pits 1 and 2, as shown in Figure 8. Its construction would require the removal of a nonprocess building and some railroad ties; pending the upcoming decision on the disposition of wastes resulting from remediation of the chemical plant area (see Chapter 1), the removed materials would be placed in a material staging area (MSA) constructed in the northern portion of the site (see Appendix A).

The proposed action would also support other response actions for the project. That is, the plant would be available to treat other waters that are not currently impounded at the chemical plant area but will be collected in the future, e.g., at the temporary storage area (TSA) that will be constructed for the quarry bulk waste remedial action (see Chapter 1). Therefore, the contaminant characteristics of a variety of potential influents were considered during conceptual design of the proposed plant in order to identify appropriate unit processes for the treatment system (see Section 2.4.5 and Appendixes A, B, and C). Both the amenability of these assembled processes to future modifications and inherent operational flexibility were considered in designing the treatment plant. This approach reflects a responsiveness to the variations in influent flow and contaminant types and/or concentrations expected during the operational period.

Potential influents to the proposed treatment plant include (1) water in the raffinate pits, Frog Pond, and Ash Pond, (2) filtrate from dewatering pit sludges and pond sediments, (3) storm water on the pits and ponds during dredging and dewatering, (4) water from collection ponds at the TSA and MSA (i.e., from storm water runoff and leachate generation, if any), (5) construction and decontamination water, and (6) sink and shower water.

Detailed treatment plant design can only be developed pursuant to a decision on the proposed action as a result of this EE/CA process. Thus, the conceptual design and discussion of component unit operations in this document must be considered preliminary. Detailed design, which would be initiated if the proposed action is approved, would be based on results of treatability tests using the system components identified in Appendix C. The current conceptual design of the treatment plant is based on potential influents and contaminants of concern for the proposed action (see Section 2.4.5); design considerations for contaminant removal are presented in Tables 6 and 7 and Appendixes A, B, C, and D. Estimated design flow information for the treatment plant is summarized in Table 8.

A dual treatment system has been identified for the proposed plant -- one process scheme comprised of physicochemical unit processes, the other a distillation system -- to address the variety of potential influents with differing contaminant characteristics. (Additional information on the proposed treatment plant is presented in Appendix C.) Each influent would be directed to the appropriate system based on

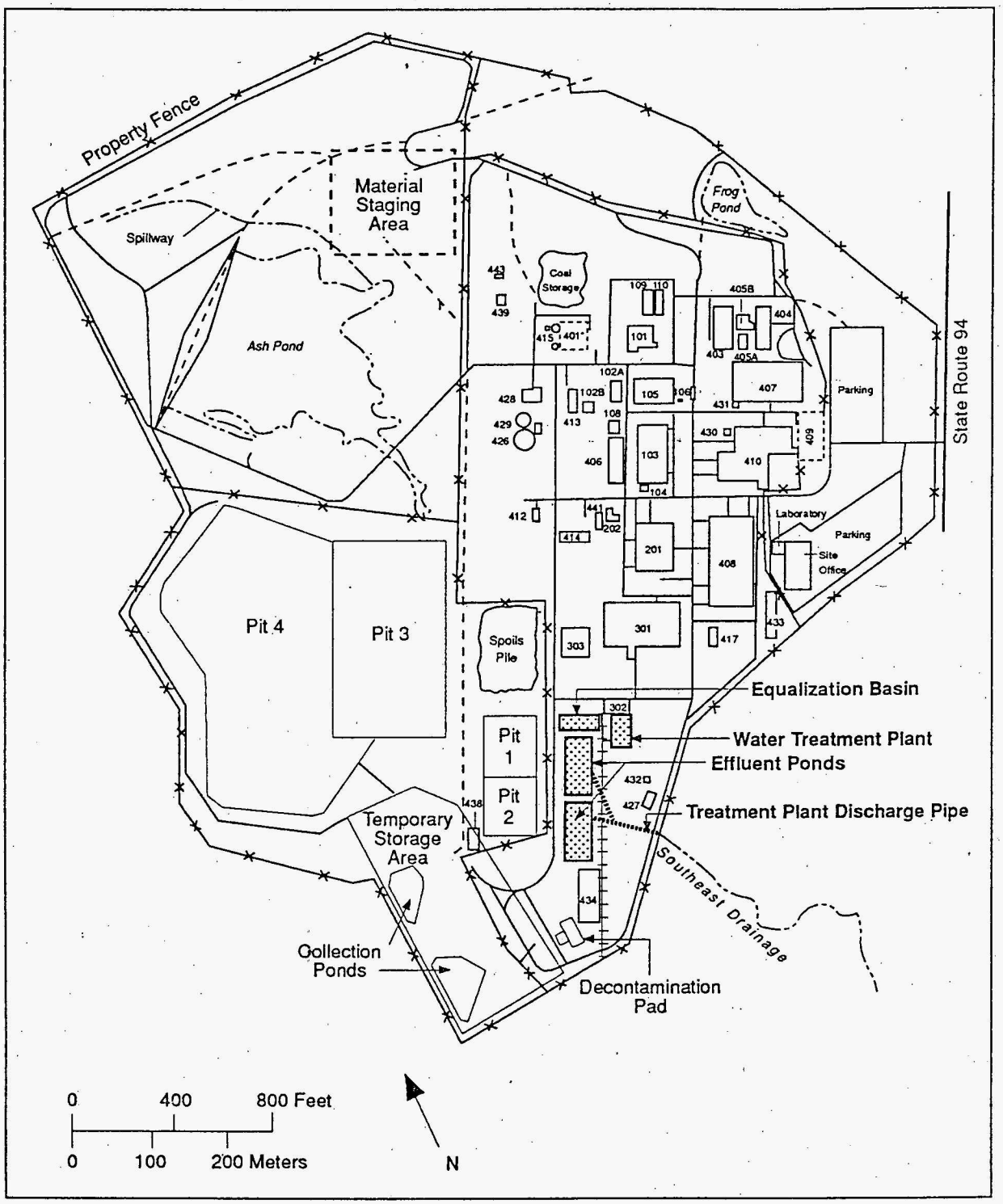

FIGURE 8 Location and Layout of the Proposed Water Treatment Plant

TABLE 6 Primary Contaminants Requiring Treatment to Reduce Concentrations to Potential Effluent Targets

Contaminant	Unit	Average Influent Concentration[a]	Potential Effluent Target[b]
Arsenic	mg/L	0.09	0.05
Manganese	mg/L	0.07	0.05
Selenium	mg/L	0.04	0.01
Fluoride	mg/L	4.6	2
Chloride	mg/L	778	250
Nitrate (as N)	mg/L	1,500	10
Cyanide	µg/L	30	5
2,4-DNT	µg/L	10	0.11
Radium-226	pCi/L	184	5, combined
Radium-228	pCi/L	96	
Total uranium[c]	pCi/L	1,416	100

[a]A primary contaminant is one for which the average concentration in the influent exceeds the potential effluent target (see Section 2.4.5). Listed concentrations represent the highest average values reported for the following planned influent sources: the raffinate pits, Frog Pond, Ash Pond, and the TSA collection ponds -- based on quarry water quality data (see Appendix A); these sources are considered separately because they contain different contaminant characteristics and their treatment would be sequenced. Other influents were also considered during plant design, e.g., interstitial waters, but have not been included in this table because related decisions, e.g., on sludge/sediment management, have not yet been made (see Chapter 1). However, the proposed system has been designed to effectively treat these other influents (see Table 8 and Appendix C).

[b]Potential effluent targets are discussed in Appendixes A and D.

[c]See Section C.5 (Appendix C) for the derivation of the effluent target proposed for uranium.

TABLE 7 Secondary Contaminants That May Also Require Treatment

Contaminant	Unit	Range of Influent Concentrations[a]	Potential Effluent Target[b]
Antimony	mg/L	<0.06-0.395	0.146
Beryllium	mg/L	<0.001-0.008	0.005
Chromium	mg/L	<0.001-0.194	0.05
Copper	mg/L	<0.001-3.7	1
Iron	mg/L	0.011-3.8	0.3
Lead	mg/L	0.001-0.358	0.05
Nickel	mg/L	0.001-0.174	0.1
Sulfate	mg/L	70-2,220	250
Thorium-230[c]	pCi/L	1.6-760	15, minus radium-226
Thorium-232[c]	pCi/L	1.1-<110	15, minus radium-228

[a]A secondary contaminant is one for which the potential effluent target is not exceeded by the average concentration of the influent but is exceeded by the upper end of the concentration range (see Section 2.4.5). Listed ranges are taken from data for potential influents given in Appendix A.

[b]Potential effluent targets are discussed in Appendixes A and D.

[c]As gross alpha.

contaminant characteristics. For example, it is expected that influent from the TSA and sinks and showers would be directed to the physicochemical system, whereas that from the raffinate pits and Frog Pond would be directed to the distillation system. Based on the estimated system allocations and influent rates for the proposed treatment plant (see Table 8), the nominal capacity for each treatment system would be 440 m^3/d (80 gpm); using a design safety factor of 1.25, the maximum capacity would be 550 m^3/d (100 gpm). The projected treatment strategy for the dual system translates to a utilization rate of about 50% over the operational period.

Influent from the TSA, MSA, sinks and showers, and decontamination water would be essentially continuous throughout most of the operational period of the plant. Flows from the surface impoundments would be sequenced to optimize plant utilization. A potential influent sequencing approach is provided as follows:

- Pit 1 could be decanted during the latter half of year 3, with sequenced sludge dredging and dewatering; these activities are expected to be completed in about 6 months;

TABLE 8 Major Influents to the Treatment Plant

Influent Source	Influent Rate[a] (gpm)	Estimated Volume (10^6 gal)	Remarks[b]
Years 1-2			
TSA collection ponds	24.4	22.8	34 in./yr precipitation on 13 acres, 95% runoff coefficient, treated over 325 days/year
MSA collection ponds	15.0	10.5	34 in./yr precipitation on 4 acres in first year and 8 acres in second year, 95% runoff coefficient, treated over 325 days/year
Decontamination water	8.3	7.8	25 gpm for 8 hours/day, 325 days/year
Sink and shower water	1.7	1.6	Sink, 320 washes/day at 1.5 gal/wash; shower, 80 showers/day at 25 gal/shower; 325 days/year
Years 3-4			
TSA collection ponds	24.4	22.8	34 in./yr precipitation on 13 acres, 95% runoff coefficient, treated over 325 days/year
MSA collection ponds	22.5	21.0	34 in./yr precipitation on 12 acres, 95% runoff coefficient, treated over 325 days/year
Decontamination water	8.3	7.8	25 gpm for 8 hours/day, 325 days/year
Sink and shower water	3.4	3.2	Sink, 640 washes/day at 1.5 gal/wash; shower, 160 showers/day at 25 gal/shower; 325 days/year
Pit 1	44.0	1.6	Impounded water, decanted over 25 operating days
Pit 2	44.0	1.6	Impounded water, decanted over 25 operating days
Pit 3	44.0	10.1	Impounded water, decanted over 159 operating days
Frog Pond	35.0	0.5	Impounded water, decanted over 10 operating days
Storm water on pits 1 and 2	2.4	1.2	34 in./yr precipitation on 1.2 acres per pit during dredging and dewatering over 162 operating days per pit

TABLE 8 (Cont'd)

Influent Source	Influent Rate[a] (gpm)	Estimated Volume (10^6 gal)	Remarks[b]
Years 3-4 (Cont'd)			
Storm water on Frog Pond	1.4	0.1	34 in./yr precipitation on 0.7 acres during dredging and dewatering over 43 operating days
Pits 1 and 2 sludge dewatering	9.0	4.1	Sludge dewatered from about 30% to 50% solids at a rate of 35 dry tons/day (pit 1, 17,900 yd^3 sludge; pit 2, 19,000 yd^3 sludge)
Frog Pond sediment dewatering	8.1	0.5	Sediment (5,000 yd^3) dewatered from about 30% to 50% solids at a rate of 35 dry tons/day
TSA sludge dewatering	8.1	0.5	Sludge (4,800 yd^3) dewatered from about 30% to 50% solids at a rate of 35 dry tons/day
Years 5-8			
TSA collection ponds[d]	24.4	11.4	34 in./yr precipitation on 13 acres for year 5 only, 95% runoff coefficient, treated over 325 days
MSA collection ponds[d]	15.0	10.5	34 in./yr precipitation on 12 acres for year 5 only, 95% runoff coefficient, treated over 325 days
Decontamination water	8.3	15.6	25 gpm for 8 hours/day, 325 days/year
Sink and shower water	3.4	6.4	Sink, 640 washes/day at 1.5 gal/wash; shower, 160 showers/day at 25 gal/shower; 325 days/year
Pit 4	44.0	43.1	Impounded water, decanted in 680 operating days
Ash Pond	10.0	1.8	Impounded water, decanted in 125 operating days
Storm water on pits 3 and 4[c]	7.9	16.8	34 in./yr precipitation on 8.4 acres for pit 3 and 15 acres for pit 4 during dredging and dewatering over 1,023 operating days for pit 3 and 218 operating days for pit 4

TABLE 8 (Cont'd)

Influent Source	Influent Rate[a] (gpm)	Estimated Volume (10^6 gal)	Remarks[b]
Years 5-8 (Cont'd)			
Storm water on Ash Pond	10.9	5.4	34 in./yr precipitation on 11.1 acres during dredging and dewatering over 243 operating days
Pits 3 and 4 sludge dewatering[c]	11.8	18.4	Sludge dewatered from about 30% to 50% solids at a rate of 35 dry tons/day (pit 3, 129,200 yd^3 sludge; pit 4, 30,200 yd^3 sludge)
Ash Pond sediment dewatering	8.1	4.0	Sediment (39,000 yd^3) dewatered from about 30% to 50% solids at a rate of 35 dry tons/day

[a]The treatment plant would be a dual system, one comprised of physicochemical unit processes and the other of distillation processes (see Appendix C). Influent flow would be directed to the appropriate treatment system based on contaminant characteristics, and flows would be sequenced to optimize system utilization. Hence, although discrete influent rates have been estimated in this table for informational purposes, the rates cannot be summed directly because additional design capacity has not been allocated for sources treated in sequence.

[b]The influent rate for decontamination water and sink and shower water is given as gallons per minute generated daily. The influent rate for storm water is based on the plant operating rate of 24 hours/day, 325 days/year, but the volume is based on operating days plus an activity down time of about 10%. The duration of storm-water inflow is the same as that of dredging and dewatering. Because considerable time would be required to dredge and dewater pits 3 and 4 and Ash Pond, the estimated storm water volume for these sources incorporates a 50% retention factor to address the general balance between precipitation and evaporation in the area; a 100% storm water retention was conservatively assumed for the other impoundments because the duration of dredging and dewatering would be less.

[c]Although pit 3 dredging and dewatering would be initiated in the latter part of year 4, the majority of this activity would be conducted during years 5-7; hence, the sludge dewatering and storm water influents from pit 3 are listed in this table under years 5-8.

[d]The TSA and MSA are assumed to be closed following year 5.

- Pit 2 could be decanted at the beginning of year 4, with sequenced sludge dredging and dewatering, as for pit 1;

- Pit 3 could be decanted during the first half of year 4, with sequenced sludge dredging and dewatering concurrent with Frog Pond decanting and sediment dredging and dewatering during the latter half of year 4 and extending into year 7;

- Pit 4 could be decanted during years 5-7, with sequenced sludge dredging and dewatering extending into year 8; and

- Ash Pond could be decanted during year 8, with subsequent sediment dredging and dewatering.

Based on conceptual design, the equalization basin of the treatment plant would be divided by a common wall to permit direction of the influent flow to the appropriate process scheme within the plant. Because it would receive untreated water, the basin would be constructed with a double liner and leachate collection system. Similarly, each effluent pond would be divided by a common wall to permit concurrent treatment of different sources by each system, followed by batch discharge. The effluent ponds would also be lined.

The quality of water leaving the treatment plant would be monitored for compliance with discharge limits that would be specified in an NPDES permit established by the state of Missouri for the proposed action. Effluent would be discharged to one of two effluent ponds. After the first pond was filled, treated water would be directed to the second pond, and water in the full pond would be sampled and analyzed. If contaminant levels were within the effluent limits specified in the NPDES permit, the water would be discharged from the pond to the Missouri River via the Southeast Drainage (Figure 8). If any specific effluent limit was exceeded, the water would be returned to the equalization basin for recycle through the treatment plant. Each effluent pond would have a storage capacity to accommodate 10 days of plant operation; this would allow for the receipt of and response to analytical testing results (i.e., to accommodate recycle, if necessary). The treatment plant is expected to be operated at no more than 50% of the nominal rate. Therefore, during concurrent operation of the two treatment systems, treated water is expected to be released at an annual average rate of less than 440 m^3/d (80 gpm); the batch discharge rate during concurrent operation is expected to be less than 880 m^3/d (160 gpm).

An estimated 7.4 m^3/d (9.7 yd^3/d) of waste would be generated by the distillation system of the treatment plant if it were operating at nominal capacity; this volume would be reduced by follow-on mechanical drying, such that the final volume would be about 2.1 m^3/d (2.7 yd^3/d). The annual volume of waste generated by the distillation system would vary depending on influent sequencing but would not exceed about 670 m^3 (880 yd^3). An estimated 1.1 m^3/d (1.5 yd^3/d) would be generated by the physicochemical system of the treatment plant if it were operating at nominal capacity; this volume would be reduced by follow-on filtration of process sludges, such that the final volume would be about 0.4 m^3/d (0.6 yd^3/d). The annual volume of waste generated by the

physicochemical system would vary as for the distillation system but would not exceed about 150 m^3 (195 yd^3). The treatment plant is expected to be operated at no more than a 50% utilization rate over the treatment period; therefore, the actual volume of wastes generated by the two systems is expected to be less than half of those presented here.

Process residues from the treatment plant would be containerized and placed in controlled storage on-site, e.g., either in the TSA that will be constructed for the quarry bulk waste remedial action or in Building 434, which was recently converted for waste storage. The waste containers would be subsequently removed from storage for disposal as part of the overall remedial action for the chemical plant area of the Weldon Spring site; disposal decisions will be addressed in the RI/FS-EIS currently in preparation (see Chapter 1).

The designs for site preparation, concrete pads for plant construction, metal building enclosures, lined equalization and effluent ponds, piping, and power supply -- as well plans for other support activities such as procurement specifications -- would be developed as required, pending approval of the proposed action. Manpower and schedule requirements for these activities would be identified prior to the initiation of detailed design.

8 REFERENCES

American Cancer Society, 1988, *Cancer Facts and Figures 1988*, New York.

Argonne National Laboratory, 1990, *Feasibility Study for Management of the Bulk Wastes at the Weldon Spring Quarry, Weldon Spring, Missouri*, DOE/OR/21548-104, prepared by Argonne National Laboratory, Environmental Assessment and Information Sciences Division, Argonne, Ill., for U.S. Department of Energy, Oak Ridge Operations Office, Weldon Spring Site Remedial Action Project, Weldon Spring, Mo., Feb.

Bechtel National, Inc., 1984, *Geologic Report, Weldon Spring Raffinate Pits Site, Weldon Spring Missouri*, DOE/OR/20722-6, prepared for U.S. Department of Energy, Oak Ridge Operations Office, Oak Ridge, Tenn., Nov.

Bechtel National, Inc., 1985, *Weldon Spring Site Environmental Monitoring Report, Calendar Year 1984*, DOE/OR/20722-58, prepared for U.S. Department of Energy, Oak Ridge Operations Office, Oak Ridge, Tenn., July.

Bechtel National, Inc., 1987, *Hydrogeological Characterization Report for Weldon Spring Chemical Plant, Weldon Spring, Missouri*, DOE/OR/20722-137, prepared for U.S. Department of Energy, Oak Ridge Operations Office, Oak Ridge, Tenn., July.

Bedan, D., 1988, *Missouri River Low Flows*, memorandum from D. Bedan (DEQ Administration, Missouri Department of Natural Resources, Columbia) to B. Hentges (WPCP, Missouri Department of Natural Resources, Columbia), Sept. 6.

Bedan, D., 1989, personal communication from D. Bedan (DEQ Administration, Missouri Department of Natural Resources, Columbia) to M. MacDonell (Argonne National Laboratory, Argonne, Ill.), Nov. 30.

Dean, T., 1985, *Groundwater Tracing Project, Weldon Spring Area*, Missouri Department of Natural Resources, Division of Geology and Land Survey, Jefferson City, Interim Report Part 3, April 9.

DeBruyckere, L., 1989, personal communication from L. DeBruyckere (Missouri Department of Conservation, Busch Memorial Wildlife Area, St. Charles County) to I. Hlohowskyj (Argonne National Laboratory, Argonne, Ill.), March.

Fleener, G., 1988, personal communication from G. Fleener (Missouri Department of Conservation, Columbia Research Center, Columbia, Mo.) to M. MacDonell (Argonne National Laboratory, Argonne, Ill.), Nov. 2.

Gilbert, T.L., et al., 1989, *A Manual for Implementing Residual Radioactive Material Guidelines*, ANL/ES-160; DOE/CH/8901, prepared by Argonne National Laboratory, Energy and Environmental Systems Division, Argonne, Ill., for U.S. Department of Energy, Assistant Secretary for Nuclear Energy, June.

Haroun, L.A., et al., 1990, *Baseline Risk Evaluation for Exposure to Bulk Wastes at the Weldon Spring Quarry, Weldon Spring, Missouri*, DOE/OR/21548-065, prepared by Argonne National Laboratory, Environmental Assessment and Information Sciences Division, Argonne, Ill., for U.S. Department of Energy, Oak Ridge Operations Office, Weldon Spring Site Remedial Action Project, Weldon Spring, Mo., Jan.

International Commission on Radiological Protection, 1979, *Limits for Intake of Radionuclides by Workers*, ICRP Publ. 30, Annals of the ICRP, *2*(3/4).

Kleeschulte, M.J., and L.F. Emmett, 1987, *Hydrology and Water Quality at the Weldon Spring Radioactive Waste-Disposal Sites, St. Charles, Missouri*, U.S. Geological Survey Water-Resources Investigation Report 87-4169.

MacDonell, M.M., J.M. Peterson, and I.E. Joya, 1989, *Engineering Evaluation/Cost Analysis for the Proposed Management of Contaminated Water in the Weldon Spring Quarry*, DOE/OR/21548-039, prepared by Argonne National Laboratory, Energy and Environmental Systems Division, Argonne, Ill., for U.S. Department of Energy, Oak Ridge Operations Office, Weldon Spring Site Remedial Action Project, Weldon Spring, Mo., Jan.

Mazur, B., 1988, personal communication from B. Mazur (Chief of Planning and Water Monitoring, Public Drinking Water Program, Missouri Department of Natural Resources, Jefferson City) to M. MacDonell (Argonne National Laboratory, Argonne, Ill.), Dec. 8.

Missouri Department of Natural Resources, 1989, *Shallow Groundwater Investigations at Weldon Spring, Missouri, Second Annual Report for Fiscal Year 1989*, prepared by Division of Geology and Land Survey, Rolla, Mo., for U.S. Department of Energy, Weldon Spring Site Remedial Action Project, St. Charles, Mo., Dec.

MK-Ferguson Company and Jacobs Engineering Group, 1988, *Hydrogeologic Investigations Sampling Plan*, DOE/OR/21548-020, Rev. 0, prepared for for U.S. Department of Energy, Oak Ridge Operations Office, Weldon Spring Site Remedial Action Project, Weldon Spring, Mo., Nov.

MK-Ferguson Company and Jacobs Engineering Group, 1989a, *Annual Environmental Monitoring Report, 1988*, DOE/OR/21548-079, Rev. 0, prepared for for U.S. Department of Energy, Oak Ridge Operations Office, Weldon Spring Site Remedial Action Project, Weldon Spring, Mo., June.

MK-Ferguson Company and Jacobs Engineering Group, 1989b, *Waste Assessment Chemical Characterization of the Weldon Spring Site Raffinate Pits*, DOE/OR/21548-092, Rev. 0, prepared for for U.S. Department of Energy, Oak Ridge Operations Office, Weldon Spring Site Remedial Action Project, Weldon Spring, Mo., Aug.

MK-Ferguson Company and Jacobs Engineering Group, 1989c, unpublished data, Weldon Spring Remedial Action Project, Weldon Spring, Mo.

MK-Ferguson Company and Jacobs Engineering Group, 1989d, *Remedial Investigations for Quarry Bulk Wastes*, DOE/OR/21548-066, Rev. 1, prepared for U.S. Department of Energy, Oak Ridge Operations Office, Weldon Spring Remedial Action Project, Weldon Spring, Mo., July.

MK-Ferguson Company and Jacobs Engineering Group, 1990a, *Draft Aquifer Characteristics Data Report for the Weldon Spring Site Chemical Plant/Raffinate Pits and Vicinity Properties*, DOE/OR/21548-122, Rev. B, prepared for U.S. Department of Energy, Oak Ridge Operations Office, Weldon Spring Remedial Action Project, Weldon Spring, June.

MK-Ferguson Company and Jacobs Engineering Group, 1990b, *Suitability of the Weldon Spring Site for Potential Location of a Disposal Facility*, DOE/OR/21548-102, Rev. A, prepared for for U.S. Department of Energy, Oak Ridge Operations Office, Weldon Spring Site Remedial Action Project, Weldon Spring, Mo., Jan. (Draft).

National Climatic Data Center, 1988, *Local Climatological Data, Annual Summary with Comparative Data - St. Louis Missouri*, Asheville, N.C.

National Council on Radiation Protection and Measurements, 1987, *Exposure of the Population in the United States and Canada from Natural Background Radiation*, NCRP Report No. 94, Bethesda, Md., Dec. 30.

National Research Council, 1988, *Health Risks of Radon and Other Internally Deposited Alpha-Emitters, BEIR IV*, Committee on the Biological Effects of Ionizing Radiations, National Academy Press, Washington, D.C.

Niedermeyer, G.J., 1976, *Assessment of Weldon Spring Chemical Plant in St. Charles County, Missouri*, Report No. DRCPM-DRR-TR-76029, U.S. Department of the Army, Aberdeen Proving Ground, Md., March 1.

Peterson, J.M., et al., 1988, *Work Plan for the Remedial Investigation/Feasibility Study - Environmental Impact Statement for the Weldon Spring Site, Weldon Spring, Missouri*, DOE/OR/21548-033, prepared for U.S. Department of Energy, Oak Ridge Operations Office, Weldon Spring Site Remedial Action Project, Weldon Spring, Mo., Aug.

Sax, N.I., 1979, *Dangerous Properties of Industrial Materials*, Van Nostrand Reinhold Company, New York.

Sax, N.I., 1984, *Dangerous Properties of Industrial Materials*, 6th ed., Van Nostrand Reinhold Company, New York.

Tieger, J., 1988, letter from J. Tieger (U.S. Fish and Wildlife Service, Columbia Field Office, Columbia, Mo.) to I. Hlohowskyj (Argonne National Laboratory, Argonne, Ill.), Dec. 22.

Tucker, G., 1989, personal communication from G. Tucker (National Weather Service, St. Charles, Mo.) to M.J. Davis (Argonne National Laboratory, Argonne, Ill.), Dec. 18.

U.S. Department of Agriculture, 1982, *Soil Survey of St. Charles County, Missouri*, Soil Conservation Service in cooperation with the Missouri Agricultural Experimental Station.

U.S. Department of Energy, 1987, *Draft Environmental Impact Statement, Remedial Action at the Weldon Spring Site*, DOE/EIS-0117D, Office of Remedial Action and Waste Technology (Feb.).

U.S. Environmental Protection Agency, 1987, *National Priorities List for Uncontrolled Hazardous Waste Sites, Final Rule (40 CFR Part 300)*, Federal Register, 52:27620, July 22.

U.S. Environmental Protection Agency, 1989a, *National Priorities List for Uncontrolled Hazardous Waste Sites, Final Federal Facility Site Update; Final Rule (40 CFR Part 300)*, Federal Register, 54:10512, March 13.

U.S. Environmental Protection Agency, 1989b, *National Priorities List for Hazardous Waste Sites: Update #9 — Federal Facility Sites; Proposed Rule (40 CFR Part 300)*, Federal Register, 54(134):29820-29825, July 14.

U.S. Environmental Protection Agency, 1990a, *National Priorities List for Uncontrolled Hazardous Waste Sites; Final Rule (40 CFR Part 300)*, Federal Register, 55(35):6154-6176, Feb. 21.

U.S. Environmental Protection Agency, 1990b, *National Oil and Hazardous Substances Pollution Contingency Plan; Final Rule (40 CFR Part 300)*, Federal Register, 55(46):8666-8865, March 8.

Weichman, M.S., 1986, letter from M.S. Weichman (Compliance and Review Chief, Division of Parks, Recreation, and Historic Preservation, Missouri Department of Natural Resources, Jefferson City, Mo.) to R.R. Nelson (Project Manager, Weldon Spring Site Remedial Action Project, U.S. Department of Energy, Oak Ridge, Tenn.), Nov. 3.

APPENDIX A:

CHARACTERIZATION RESULTS FOR THE CHEMICAL PLANT AREA

APPENDIX A:

CHARACTERIZATION RESULTS FOR THE CHEMICAL PLANT AREA

Characterization data for the chemical plant area of the Weldon Spring site are presented in this appendix. These data are relevant to the proposed water treatment plant for managing the surface waters impounded at the chemical plant area. Data for the quarry pond are also presented because they are used to estimate the characteristics of an additional potential influent to the treatment plant. The proposed action is an expedited response action for the Weldon Spring Site Remedial Action Project.

A.1 SURFACE WATERS

The surface waters impounded at the chemical plant area -- i.e., in the four raffinate pits, Frog Pond, and Ash Pond -- would be treated in the proposed water treatment plant. Water in the raffinate pits exists in two phases: free water above the sludge and water in contact with and bound to the raffinate material, making a sludge or gel. The water in contact with the raffinate material is expected to have higher concentrations of dissolved solids than free water over the sludge.

Surface water samples were collected from all four raffinate pits and analyzed for various contaminants. The pit waters contain a significant amount of metal and non-metal ions as a result of past processing activities at the site. Sampling results have not determined the presence of volatile or semivolatile organic compounds, pesticides, or polychlorinated biphenyls (PCBs). Table A.1 lists the contaminants detected in the raffinate pit waters whose highest historical concentrations exceed potential effluent targets (data from 1967 through 1988); these data are not presented as averages because the water quality in the pits varies with time due to the local climate and environmental processes. Those ions detected in the raffinate pit waters whose historical highest concentrations did not exceed potential effluent targets include barium, cadmium, chloride, cobalt, manganese, mercury, and zinc.

Relatively high concentrations of nitrates and sulfates are present in the raffinate pit waters, and fluoride levels range from 1.1 to 19 mg/L. The pH of the waters ranges from 6.3 to 10.5. Because metals exhibit limited solubility at high pH, it is expected that many metals exist as solids within the sludge. In fact, insoluble compounds such as magnesium fluoride are present in considerable quantities in the sludges.

The raffinate pits also contain radionuclides from the past processing of uranium and thorium ore concentrates. Hence, materials in the raffinate pits are primarily contaminated with naturally occurring radionuclides of the uranium-238 and thorium-232 decay series (Figures A.1 and A.2). The solubilities of uranium, thorium, and radium determine the radiological composition of the raffinate pit waters; for example, little thorium is present in the waters relative to the sludges because thorium is very insoluble. The results of radiological sampling of the pit waters are presented in Table A.2.

TABLE A.1 Contaminants in the Raffinate Pit Waters with Highest Concentrations Exceeding Potential Effluent Targets

Contaminant	Unit	Highest Concentration[a]	Effluent Target[b]
Metals			
Antimony	µg/L	395	146
Arsenic	µg/L	140	20
Beryllium	µg/L	8	5
Chromium	µg/L	194	50
Copper	µg/L	111	20
Iron	µg/L	457	300
Lead	µg/L	358	50
Manganese	µg/L	93	50
Nickel	µg/L	174	100
Selenium	µg/L	220	10
Anions			
Cyanide	µg/L	50	5
Fluoride	mg/L	19	2.2
Nitrate (as N)	mg/L	5,900	10
Sulfate	mg/L	990	250
Radionuclides			
Radium-226	pCi/L	500	} 5, combined
Radium-228	pCi/L	927	
Total uranium[c]	pCi/L	2,900	550[d]

[a]The highest concentrations are taken from data for all pits from 1967 to 1988.

[b]Targets taken from federal drinking water standards (40 CFR Parts 141 and 143, established pursuant to the Safe Drinking Water Act) and state of Missouri drinking water supply limits, unless otherwise noted (see Appendix D).

[c]Total uranium = sum of uranium-234, uranium-235, and uranium-238, which are assumed to be present in their natural activity ratio of 1:0.046:1.

[d]Target derived from DOE radiation protection standards (DOE Order 5400.5 [DOE 1990]). Based on implementation of the as low as reasonably achievable (ALARA) process, the level of uranium in the treatment plant effluent will be maintained at or below 100 pCi/L (see Section C.5).

Sources: Lenhard et al. (1967); MK-Ferguson Company (1987); MK-Ferguson Company and Jacobs Engineering Group (1988b, 1989d, 1989e); DOE (1987); U.S. Geological Survey (1987).

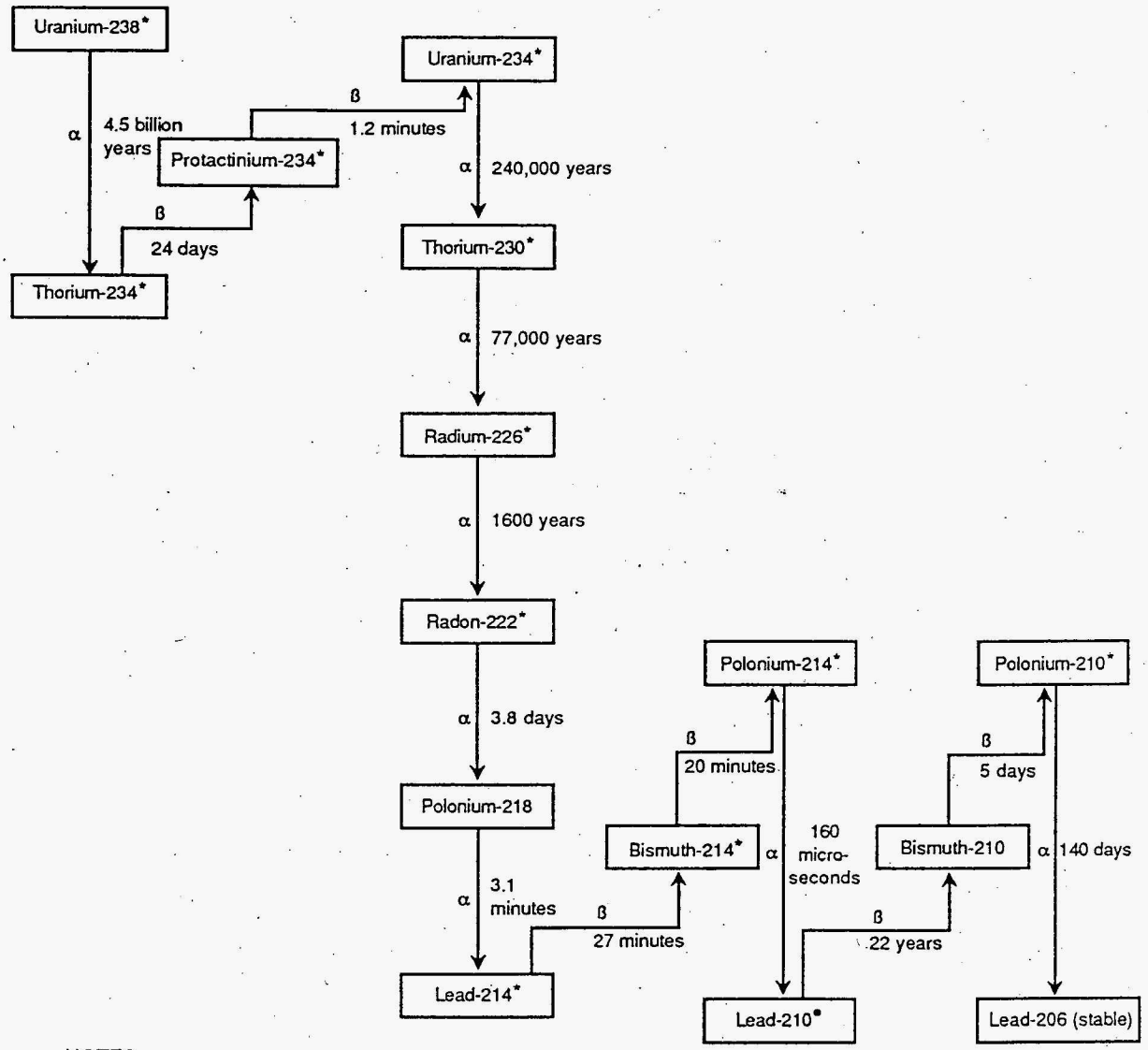

NOTES:
Only the dominant decay mode is shown.
The times shown are half-lives.
The symbols α and ß indicate alpha and beta decay.
An asterisk indicates that the isotope is also a gamma emitter.

FIGURE A.1 Uranium-238 Radioactive Decay Series

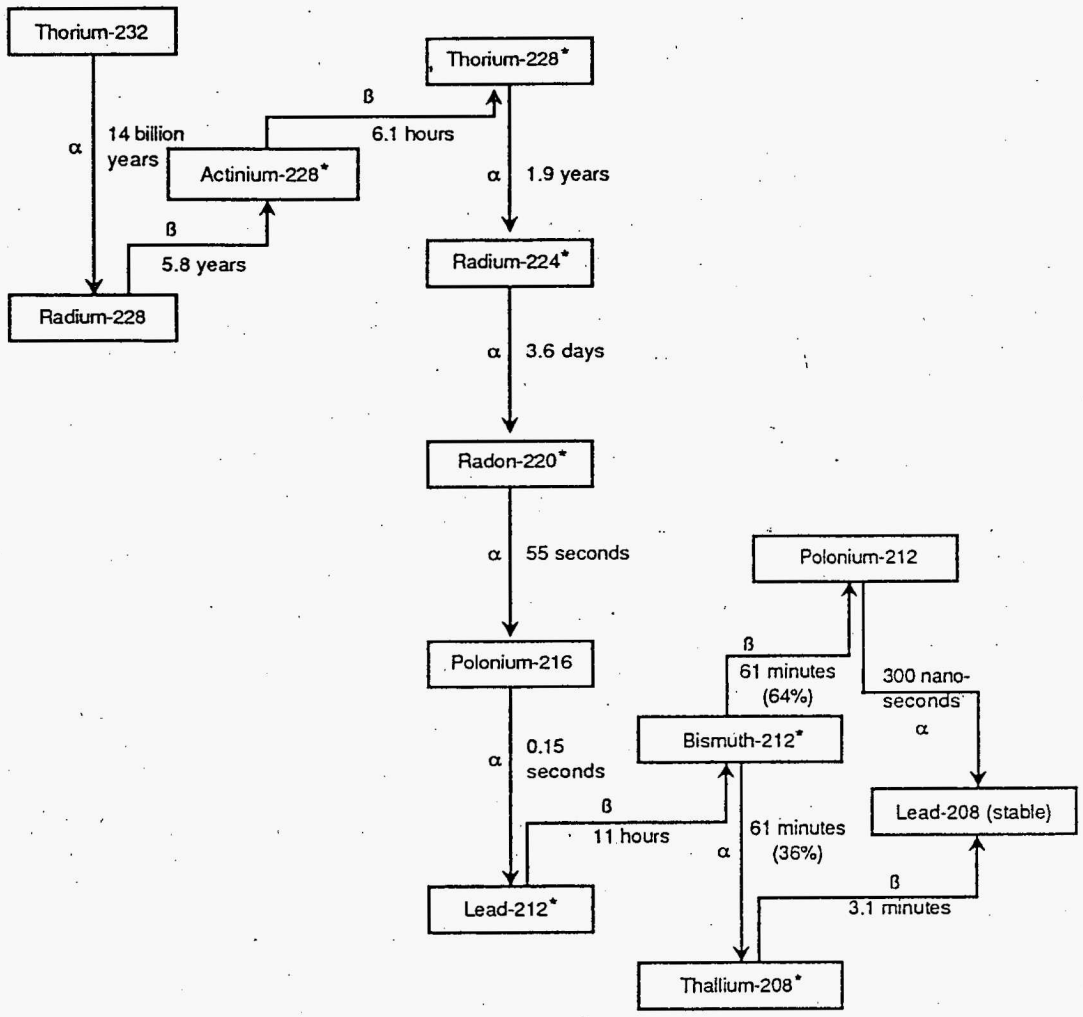

NOTES:
Only the dominant decay mode is shown.
The times shown are half-lives.
The symbols α and β indicate alpha and beta decay.
An asterisk indicates that the isotope is also a gamma emitter.

FIGURE A.2 Thorium-232 Radioactive Decay Series

TABLE A.2 Radiological Data from Water Sampling in the Four Raffinate Pits

Sampling Location	Pit No.	Date Sampled	Concentration ± Error[a] (pCi/L)		
			Gross Alpha	Gross Beta	Total Uranium
SW-3001	1	4/24/87	200 ± 30	190 ± 70	45 ± 4
SW-3002	2	4/24/87	180 ± 30	210 ± 30	300 ± 30
SW-3003	3	4/24/87	150 ± 50	290 ± 60	130 ± 20
SW-3004	4	4/24/87	980 ± 100	1,200 ± 300	2,400 ± 300

Sampling Location	Pit No.	Date Sampled	Concentration ± Error[a] (pCi/L)			
			Radium-226	Radium-228	Thorium-230	Thorium-232
SW-3001	1	4/24/87	61 ± 7	<3	I[b]	I
SW-3002	2	4/24/87	28 ± 8	6 ± 2.7	13 ± 2	<6
SW-3003	3	4/24/87	42 ± 10	32 ± 4	16 ± 2	<6
SW-3004	4	4/24/87	3.4 ± 0.4	13 ± 6	<5	<5

[a]I = interference; a less than symbol (<) indicates that the measurement was less than the detection limit for that parameter.

[b]Sludge thorium levels indicate that the water in pit 1 may contain about 13 pCi/L of thorium-230.

Sources: Data from MK-Ferguson Company (1987); MK-Ferguson Company and Jacobs Engineering Group (1989e).

Average concentrations of contaminants detected in Frog Pond and Ash Pond are presented in Table A.3, including the contaminants of concern (uranium and chloride in Frog Pond and uranium and nitrate in Ash Pond). The average uranium concentration detected in Frog Pond is 162 pCi/L; the source of this contamination is considered to be surface runoff from the northeast portion of the chemical plant area and discharge from the storm sewer that flows into the pond. The average uranium concentration in Ash Pond is 1,720 pCi/L; the source of this uranium is considered to be surface runoff, e.g., from the south dump area. Uranium concentrations in Ash Pond have decreased to the low end of the range listed in Table A.3 following the recent construction of a diversion system around a contaminated soil area. Elevated nitrate levels in Ash Pond are also attributable to surface runoff over contaminated soils. The concentrations of chloride in Ash Pond and Frog Pond generally range from 5 to 6 mg/L and 83 to 817 mg/L, respectively (Table A.3). The elevated chloride levels are attributable to runoff from the salt pile at the Missouri Highway Department maintenance facility, which is located upgradient, immediately adjacent to the chemical plant area (MK-Ferguson Company and

TABLE A.3 Characterization Results from Water Sampling in Frog Pond and Ash Pond

Contaminant	Unit	Average Concentration[a] Frog Pond	Average Concentration[a] Ash Pond
Metals			
Aluminum	µg/L	ND	459
Chromium	µg/L	31	47
Iron	µg/L	199	490
Manganese	µg/L	89	64
Silver	µg/L	ND	16
Zinc	µg/L	ND	26
Anions			
Chloride	mg/L	778	5.63
Fluoride	mg/L	1.47	0.42
Nitrate	mg/L	1.57	31.7
Sulfate	mg/L	71.6	66.3
Others			
Uranium	pCi/L	162	1,720
2,4-DNT	µg/L	ND	0.85

Contaminant	Unit	Range of Concentrations[a] Frog Pond	Range of Concentrations[a] Ash Pond
Anions			
Chloride	mg/L	83 - 817	5 - 6
Nitrate	mg/L	0.2 - 8.3	3.4 - 360
Others			
Uranium	pCi/L	110 - 280	200 - 2,700
2,4-DNT	µg/L	ND	<0.20 - 1.5

[a]Average concentration = mean of values reported from all sources listed; ND = not detected; a less than symbol (<) indicates that the measurement was less than the detection limit for that parameter.

Sources: MK-Ferguson Company (1987); MK-Ferguson Company and Jacobs Engineering Group (1989a); DOE (1987); U.S. Geological Survey (1987).

Jacobs Engineering Group 1988f). These levels are expected to decrease because the salt pile at the maintenance facility was recently covered.

Influents other than these impounded surface waters might also be treated at the proposed water treatment plant. Data collected from 1974 to 1979 represent potential influents, including waters from sumps, manholes, water pools, and discharge pipes; these data are presented in Table A.4.

The interstitial water in the pit sludges also represents a potential influent. These sludges could be dewatered in the near future to reduce waste volume and facilitate waste management, and filtrate from this dewatering could be treated in the proposed water treatment plant. Sludge stratification and lack of mixing could result in significant quantities of inorganic ions being bound in the sludge and interstitial waters. To estimate the potential quality of the interstitial water, data from a 1967 study of water separated from a composite sludge sample from pit 4 were compared with data for surface water samples taken in 1967 (Lenhard et al. 1967). These data are presented in Table A.5. In another study, two samples (possibly composites) were collected from the raffinate pits (Oak Ridge National Laboratory 1987). The samples were agitated and allowed to settle; the two phases were then separated and the water analyzed. The results of this analysis are presented in Table A.6.

Another potential influent to the proposed water treatment plant is the water that will be collected at the temporary storage area for the quarry bulk wastes (see Chapter 1). The quality of this water is estimated by the water quality of the quarry pond. Characterization results for the raffinate pit waters, the sludge interstitial waters, and the quarry pond water are given in Table A.7. The type of contaminants in other potential influents to the proposed treatment plant (e.g., decontamination/wash water and storm water) is expected to be generally represented by these waters.

A.2 GROUNDWATER

The water quality of the shallow bedrock aquifer in St. Charles County varies from a calcium-magnesium-bicarbonate type to a sodium-sulfate, sodium-bicarbonate, or sodium-chloride type (MK-Ferguson Company and Jacobs Engineering Group 1988a). Total dissolved solids and chloride concentrations increase from west to east. High sulfate concentrations (naturally occurring) are limited to areas underlain by shale, sandstone, and siltstone. Much of the ground surface at the chemical plant area is covered by roads, sidewalks, and buildings, and infiltration to the unsaturated zone generally occurs along drainage ditches, leaky storm sewer lines, and small areas covered by vegetation. Discharge points for groundwater flow in the southeast portion of the site include perennial springs within the surface drainages of the Missouri River; for the remainder of the site, discharge points are within the Mississippi River drainage basin.

Groundwater has been monitored at the chemical plant area, including the raffinate pits, to assess contaminant migration. Monitoring well locations are shown in Figure A.3. Radiological and chemical results and well completion information are available in the Phase I and Phase II water quality assessments for the site (MK-Ferguson

TABLE A.4 Characterization of Other Potential Influents to the Proposed Treatment Plant

Location	Sampling Date	Concentration[a]				
		Chloride (mg/L)	Nitrate as N (mg/L)	Total Uranium (pCi/L)	Radium-226 (pCi/L)	Radium-228 (pCi/L)
Pit 1, sump	Nov 74	-	-	-	860	-
	Mar 75	68	5,960	22	1,290	-
Pit 1, manhole 13	Nov 74	-	-	-	86	-
	Mar 75	19	102.0	15	130	-
Surface water, southwest corner of the site	May 78	0.5	0.2	2,100	<0.4	0.9
	Nov 78	5.0	0.2	770	<0.4	0.9
Water pool, north of pit 1, east of pit 3	Nov 79	13.0	0.2	490	0.4	8.1
Surface water, southeast corner of pit 2	May 78	0.7	6.3	0	<0.4	0.4
	Nov 78	6.0	6.8	-	<0.4	0.9
Pit 2, sump	Nov 74	-	-	-	1,080	-
	Mar 75	33	5,490	32	1,630	-
Pit 2, manhole 13	Nov 79	-	-	-	260	-
	Mar 75	24	3,107	15	390	-
Pit 3, Discharge pipe, northeast corner	Jun 74	17	0.2	140	<0.4	<0.4

TABLE A.4 (Cont'd)

Location	Sampling Date	Concentration[a]				
		Chloride (mg/L)	Nitrate as N (mg/L)	Total Uranium (pCi/L)	Radium-226 (pCi/L)	Radium-228 (pCi/L)
Pit 3, manhole 12	Nov 74	-	-	-	100	-
	Mar 75	36	2,660	56	150	-
Pit 3, pool southeast of discharge	May 79	32	1,800	42	15	<4
Pit 4, close to off-site	Jun 74	0.7	1.0	4	0.9	2
Between pit 4 and Ash Pond	Jun 74	13.0	0.3	100	<0.4	0.9
Fence line pool, west of pit 4	Oct 74	-	-	4	-	-
Pool at base of pit 4, west wall	May 75	7.0	0.4	4	0.4	1
	May 79	<1.0	0.1	7	<0.4	<0.4

[a]A hyphen indicates that data are not available; a less than symbol (<) indicates that the measurement was less than the detection limit for that parameter.

Source: Anonymous (undated).

TABLE A.5 Comparison of Sludge and Surface Water Sampling Results from Pit 4

Contaminant	Concentration (mg/L)		
	Sludge Interstitial Water	Surface Water Sample 1	Surface Water Sample 2
Metals			
Aluminum	ND[a]	3.8-38	3.8-38
Antimony	ND	ND	ND
Arsenic	ND	ND	ND
Barium	3.7-37	3.8-38	3.8-38
Beryllium	ND	ND	ND
Boron	0.37-3.7	0.38-3.8	0.38-38
Cadmium	ND	ND	ND
Calcium	>3,700	>3,800	>3,800
Chromium	<0.37	<0.38	<0.39
Cobalt	ND	ND	ND
Copper	0.37-3.7	<0.38	<0.38
Iron	3.7-37	3.8-38	3.8-38
Lead	ND	ND	ND
Lithium	3.7-37	38-380	38-380
Magnesium	3.7-37	380-3,800	380-3,800
Manganese	<0.37	<0.38	<0.38
Molybdenum	3.7-37	3.8-38	3.8-38
Nickel	ND	<0.38	<0.38
Potassium	3.7-370	380-3,800	380-3,800
Silver	ND	0.38-30	<0.38
Sodium	>3,700	>3,800	>3,800
Strontium	3.7-37	38-380	38-380
Vanadium	0.37-3.7	0.38-38	0.38-38
Zinc	ND	ND	ND
Anions			
Chloride	90	163	160
Fluoride	46	10	12
Nitrate	21,000	26,000	26,000
Sulfate	2,200	1,040	820
Others			
pH[b]	10.5	8.9	8.4
Dissolved solids	37,000	38,500	38,500

[a]ND = not detected.

[b]pH units.

Source: Data from Lenhard et al. (1967).

TABLE A.6 Comparison of Decanted Water from Pit Sludge Samples with Highest Historical Surface Water Measurements

	Concentration (mg/L)		
Contaminant	Sample 1-1	Sample 3-2	Highest Surface Water Sample[a]
Aluminum	0.2	>100	0.5
Boron	0.3	0.7	0.183
Calcium	>100	200	890
Chloride	10	4	20
Chromium	0.6	0.1	0.19
Cobalt	≤0.5	0.2	0.04
Copper	0.2	0.1	0.11
Iron	1	0.3	0.46
Magnesium	5	>100	480
Manganese	≤0.03	0.04	0.08
Molybdenum	1	5	7.1
Potassium	50	40	141
Selenium	NA[b]	0.3	0.2
Sodium	>100	>100	1,500
Strontium	2	0.7	5.5
Uranium	<0.3	0.6	4
Vanadium	0.1	0.4	3.2
Zinc	0.6	0.2	0.07

[a]Historical measurements exclude 1967 data (see Table A.5). Except for aluminum, boron, chromium, cobalt, copper, iron, selenium, and zinc, the highest value for the surface water sample exceeds the highest value for the sludge interstitial water.

[b]NA = not available.

Source: Data from Oak Ridge National Laboratory (1987).

TABLE A.7 Water Quality of Major Potential Influents to the Proposed Water Treatment Plant

		Concentration in Potential Influents[a]				
		Raffinate Pit Surface Waters[b]	Quarry Pond[c]		Raffinate Pit Interstitial Waters[d]	
Chemical Species	Unit	Range	Range	Average	Range	Potential Effluent Target[e]
Metals						
Antimony	mg/L	<0.06-0.395	-	-	-	0.146
Arsenic	mg/L	<0.005-0.140	<0.001-0.15	0.075	-	0.05
Barium	mg/L	<0.031-0.20	0.04-0.36	0.11	-	1
Beryllium	mg/L	<0.001-0.008	-	-	-	0.005
Cadmium	mg/L	<0.0001-0.005	<0.001-0.01	<0.006	<0.001-0.005	0.01
Chromium	mg/L	<0.001-0.194	<0.001-0.02	0.013	0.01-0.06	0.05
Cobalt	mg/L	0.004-0.05	-	-	0.2-0.5	1[f]
Copper	mg/L	0.001-0.111	<0.001-<0.02	<0.01	0.1-3.7	1.0
Iron	mg/L	0.011-0.457	0.003-0.33	0.068	0.3-3.8	0.3
Lead	mg/L	0.001-0.358	0.002-<0.05	<0.05	0.05-0.10	0.05
Manganese	mg/L	0.005-0.093	0.003-0.260	0.07	0.03-0.37	0.05
Mercury	mg/L	0.0001-0.001	<0.0001-0.0006	0.0004	0.0001	0.002
Nickel	mg/L	0.001-0.174	-	-	0.1	0.1[f]
Selenium	mg/L	0.001-0.220	<0.005	<0.005	0.30	0.01
Silver	mg/L	0.001-0.04	0.003-0.015	0.015	-	0.05
Thallium	mg/L	0.005-0.010	-	-	-	0.013
Zinc	mg/L	0.001-0.066	0.005-0.31	0.068	0.2-0.6	5

TABLE A.7 (Cont'd)

Chemical Species	Unit	Concentration in Potential Influents[a]: Raffinate Pit Surface Waters[b] Range	Quarry Pond[c] Range	Quarry Pond[c] Average	Raffinate Pit Interstitial Waters[d] Range	Potential Effluent Target[e]
Anions						
Chloride[g]	mg/L	1.5-3.9	14-200	44	4-163	250
Cyanide	µg/L	<20-50	3	3	-	5
Fluoride	mg/L	1.1-19	0.9-1.1	1.0	0.2-46	2
Nitrate (as N)	mg/L	10.1-5,900	<1-9	3.7	590-4,700	10
Nitrite (as N)	mg/L	<1.5-32	-	-	-	1[h]
Sulfate	mg/L	70-990	150-240	200	820-2,220	250 150[i]
Others						
pH	units	6.3-10.5	7.3-8.2	7.7	8.4-10.5	6.5-9
Asbestos[j,k]	no./L	-	-	1.9×10^6	-	7.1×10^6
PCBs	µg/L	ND	-	-	ND	0.5[h]
2,4-DNT	µg/L	-	10	10	-	0.11[ℓ]
Radionuclides						
Radium-226	pCi/L	0.9-500	-	0.8	36-688	} 5, combined
Radium-228	pCi/L	<3-927	-	<5	40-320	
Thorium-230[m]	pCi/L	1.6-760	-	1.5	-	15, minus radium-226
Thorium-232[m]	pCi/L	1.1-<110	-	0.5	-	15, minus radium-228
Total uranium	pCi/L	6-2,900	620-3,500	2,314	400	550[n]

TABLE A.7 (Cont'd)

Chemical Species	Unit	Concentration in Potential Influents[a]				Potential Effluent Target[e]
		Raffinate Pit Surface Waters[b]	Quarry Pond[c]		Raffinate Pit Interstitial Waters[d]	
		Range	Range	Average	Range	
Radionuclides (cont'd)						
Gross alpha	pCi/L	200-3,200	1,100	1,100	-	15, minus radon and uranium
Gross beta	pCi/L	180-1,200	-	1,200	-	50[o]

[a]ND = none detected, i.e., concentration is below the analytical detection limit; a hyphen indicates that data are not available; a less than symbol (<) indicates that the measurement was less than the detection limit for that parameter. For those entries having only one value, only one sample was analyzed. The chemical species listed here are those for which levels were measured above the detection limit in at least one of these potential influents and for which effluent targets have been identified. Frog Pond and Ash Pond are also potential influents to the proposed plant; see Table A.3 for related data. Other than chloride (see footnote g), contaminants in these two impoundments are within the ranges shown in this table.

[b]The range of chemical concentrations in the raffinate pit waters represents sampling data for several years (1967-1988) and for all four pits; thus, average values were not calculated.

[c]Data for the chemical and radiological concentrations in the quarry pond are included here because these values represent possible concentrations in the runoff from the temporary storage area for the quarry bulk wastes (see MacDonell et al. 1989).

TABLE A.7 (Cont'd)

---

[d]The sludges in the raffinate pits may be dewatered in the future to reduce their volume and to facilitate further processing. Filtrate from the dewatering process would be treated in the water treatment plant. The data in this table represent the results of two sludge dewatering experiments, one from 1967 and another from 1987 (see Tables A.5 and A.6).

[e]Unless otherwise noted, potential effluent targets are taken from federal drinking water standards (40 CFR Parts 141 and 143, established pursuant to the Safe Drinking Water Act) and state of Missouri drinking water supply limits. (See Appendix D for a discussion of potential effluent targets considered for the proposed action.)

[f]Target is taken from Missouri water quality standards for protection of groundwater and livestock watering.

[g]Chloride levels measured in Frog Pond, another potential influent, range from 83 to 817 mg/L and average 778 mg/L.

[h]Target is a proposed primary drinking water standard.

[i]Target is a Missouri secondary drinking water standard.

[j]Asbestos fibers.

[k]Target is taken from EPA's proposed recommended maximum contaminant level goal (EPA 1985).

[ℓ]Target is taken from the ambient water quality criteria for federal priority pollutants, corresponding to a 10^{-6} incremental risk level for cancer (EPA 1980).

[m]As gross alpha.

[n]Target is derived from DOE radiation protection limits (DOE Order 5400.5 [DOE 1990]).

[o]Target is derived from the federal drinking water standard (40 CFR 141.26(a)(4)(b)(1)).

Sources: DOE (1987); Lenhard et al. (1987); MK-Ferguson Company (1987); MK-Ferguson Company and Jacobs Engineering Group (1988a, 1989d, 1989e); U.S. Geological Survey (1987).

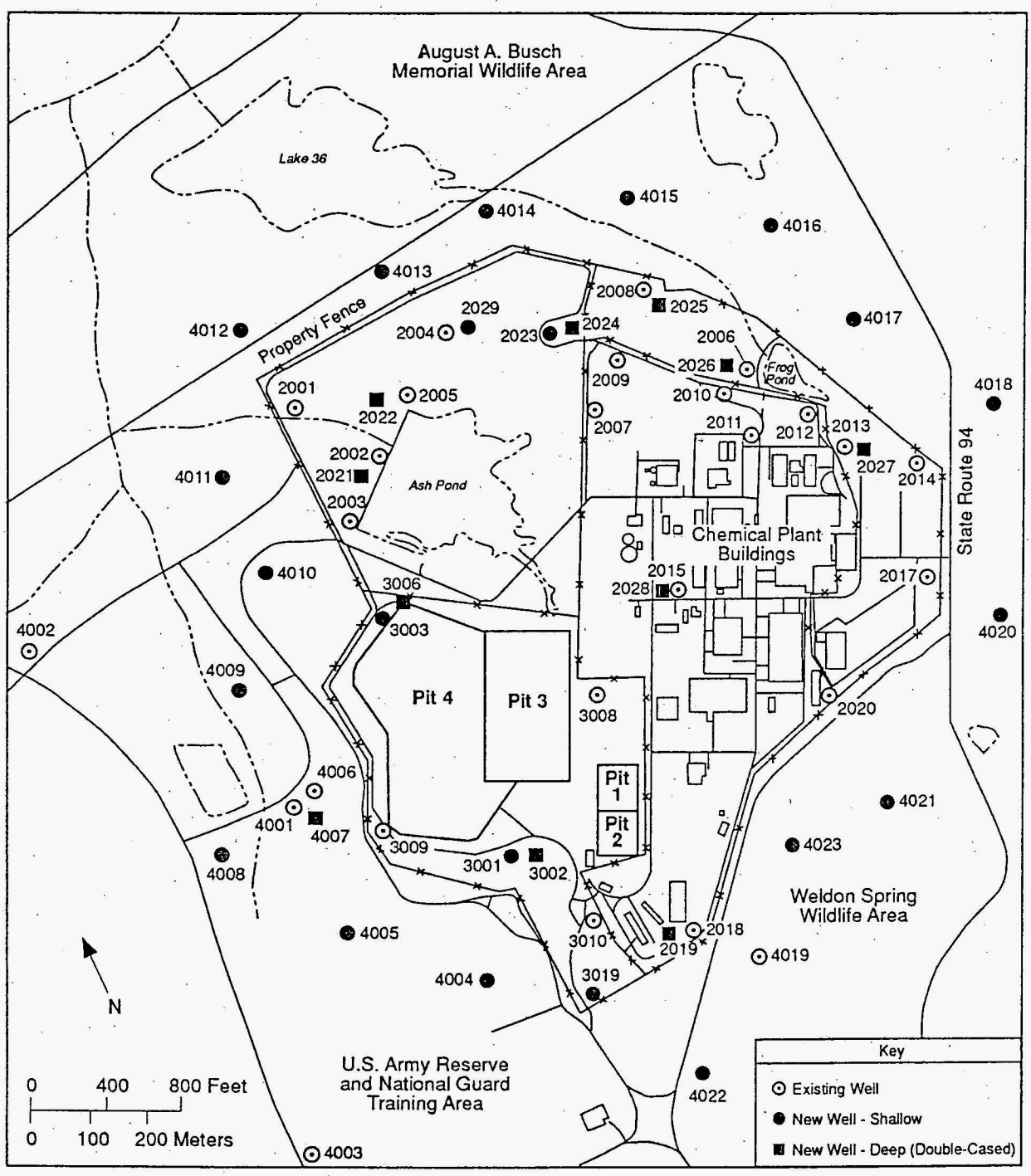

FIGURE A.3 Locations of Groundwater Monitoring Wells at the Chemical Plant Area (Source: Modified from MK-Ferguson Company and Jacobs Engineering Group 1988a)

Company 1987; MK-Ferguson Company and Jacobs Engineering Group 1989c). The results are summarized in Table A.8. These data were composited over all groundwater wells at the chemical plant area.

Monitoring data have indicated that uranium, nitrate, and nitroaromatic compounds are the major contaminants in groundwater beneath the chemical plant area. In addition, aluminum, chromium, nickel, and sulfate exceed background concentrations in several on-site wells. Although uranium and thorium-230 have been detected in several wells, radium-226 has been detected in only one sample. Volatile and semivolatile organic compounds, PCBs, and pesticides were not detected in the on-site monitoring wells, but nitroaromatic compounds and inorganic ions were detected in several of these wells.

Water quality data for 1984 and 1986 indicate elevated concentrations of calcium, lithium, magnesium, nitrate, sodium, strontium, sulfate, and uranium in shallow bedrock wells near the raffinate pits. Uranium concentrations in these wells range from 6 to 86 μg/L (MK-Ferguson Company and Jacobs Engineering Group 1988a).

The water quality of the deep bedrock aquifer varies with depth and lateral location (MK-Ferguson Company and Jacobs Engineering Group 1988a). Measured values of total dissolved solids have ranged from 305 to more than 4,700 mg/L. Additional groundwater information is presented in Chapter 2 of this document.

A.3 RAFFINATE PIT SLUDGES

Analysis of sludge samples from the raffinate pits has identified a variety of contaminants. The raffinate sludges have high concentrations of several metals, including iron, lead, magnesium, and molybdenum. The principal anions are nitrate, sulfate, and fluoride. In 1984, a composite sample of raffinate sludge was analyzed for 82 organic priority pollutants (19 pesticides, 7 PCBs, and 56 acid and base/neutral compounds) and 13 organic nonpriority pollutants. All concentrations were reported at below detection limits, which varied from 0.1 to 1 ppm for different compounds (DOE 1987).

The average concentration of total uranium in the sludges from the four raffinate pits ranges from 540 to 840 pCi/g, and the total inventory for the combined sludges is estimated to be 110 Ci. Thorium-230 is the predominant radionuclide in the sludges; the average concentration ranges from 2,600 to 27,000 pCi/g (wet weight), and the total inventory is estimated to be 3,000 Ci. The estimated average range and total inventory for radium-226 are 76 to 840 pCi/g (wet weight) and 64 Ci, respectively (MK-Ferguson Company and Jacobs Engineering Group 1989e). Due to ingrowth of radium-226 from thorium-230 (which has a half-life of 77,000 years), the average sludge concentration of radium-226 in the four raffinate pits is expected to increase to a peak concentration of 3,200 pCi/g (wet weight) in about 9,000 years. After this time, the radium-226 concentration will decrease at the same rate as the parent thorium-230.

Contaminants are more homogeneous in the pits 1, 2, and 3 sludges than in the pit 4 sludge. Despite the relative nonhomogeneity in pit 4, radiological characterization

TABLE A.8 Characterization Results from Groundwater Sampling[a]

Contaminant	Unit	Concentration in Monitoring Wells (Composite)		Concentration in Deep Wells[b]		Number of Wells in Which Contaminant Detected	Detection Limit	Background Concentration[c]
		Range	Average	High	Average			
Nitroaromatic Compounds								
1,3-Dinitrobenzene	μg/L	0.5-12.0	2.3	ND	ND	10	0.4	NA
2,4-Dinitrotoluene	μg/L	0.2-172	11.1	ND	ND	28	0.2	NA
2,6-Dinitrotoluene	μg/L	0.6-138	11.9	ND	ND	25	0.6	NA
Nitrobenzene	μg/L	0.6-8.3	2.8	5.3	2.1	14	0.6	NA
1,3,5-Trinitrobenzene	μg/L	0.03-60.5	4.6	0.53	0.22	35	0.03	NA
Trinitrotoluene	μg/L	0.55-37	6.9	ND	ND	12	0.5	NA
Inorganic Anions								
Chloride	mg/L	1.0-101	13.5	10.8	4.2	85	0.25	-
Fluoride	mg/L	0.25-17	2.9	0.32	0.29	35	0.25	-
Nitrate (as N)	mg/L	0.1-1,251	200	1.37	0.56	67	0.1	0.1-8.8
Sulfate	mg/L	2.6-866	111	117	40	87	1.0	1.9-53.9
Metals								
Aluminum	μg/L	234-665	336	ND	ND	7	200	0.3-149
Arsenic	μg/L	NA	34.1	ND	ND	1[d]	10	-
Barium	μg/L	201-1,550	352	253	253[e]	37	200	-
Cadmium	μg/L	ND	ND	-	-	ND	5	-
Chromium	μg/L	10.2-137	45.4	37.2	37.2[e]	40	10	10.2-52
Copper	μg/L	NA	45[f]	-	-	3	25	4-16

TABLE A.8 (Cont'd)

Contaminant	Unit	Concentration in Monitoring Wells (Composite)		Concentration in Deep Wells[b]		Number of Wells in Which Contaminant Detected	Detection Limit	Background Concentration[c]
		Range	Average	High	Average			
Metals (Cont'd)								
Iron	µg/L	100-2,304	240	147	122	25	100	-
Lead	µg/L	8.0-37.2	16.8	16.7	13.2	13	5	-
Lithium	µg/L	64.4-1,390	309[g]	ND	ND	9	50	-
Manganese	µg/L	15-112	78	511	117	49	15	-
Mercury	µg/L	0.21-1.76	0.52	0.35	0.35[e]	7	0.2	-
Molybdenum[h]	µg/L	13.5-82.1	25	46.1	30.2	39	13	-
Nickel	µg/L	40-172	61.1	ND	ND	24	40	23-60
Selenium	µg/L	7.7-25.5	15.6	ND	ND	4	5	-
Silver	µg/L	NA	25.5[f]	-	-	2	10	-
Thallium	µg/L	NA	48.3	ND	ND	1[d]	10	-
Vanadium	µg/L	NA	62.5[f]	-	-	2	50	-
Zinc	µg/L	20-199	43.6	42.4	35.3	49	20	0.02-43

TABLE A.8 (Cont'd)

Radionuclide	Unit	Concentration in Monitoring Wells (Composite)		Concentration in Deep Wells[b]		Number of Wells in Which Contaminant Detected	Detection Limit	Background Concentration[c]
		Range	Average	High	Average			
Total uranium	pCi/L	1.0±0.5 to 33±4	4.8±1.3	3±0.7	2±0.8	56	1.00	0.7-5.3
Radium-226	pCi/L	NA	2.1±1.3	ND	ND	1[d]	1.00	-
Thorium-230	pCi/L	1.0±0.4 to 4.6±0.6	2.57±0.5	4.6±0.6	2.9±0.5	10	1.00	-
Thorium-232	pCi/L	ND	ND	ND	ND	ND	1.00	-

[a]ND = not detected; NA = not applicable; a hyphen indicates that the parameter was not measured.

[b]Phase II data; deep wells were 12 to 24 m (40 to 80 ft) below the water table, and shallow wells were in the upper 24 m (40 ft) of the saturated bedrock. For Phase I, the top of the well screen was 189 to 151 m (619 and 496 ft) MSL, and the bottom of the screen was 184 to 148 m (605 to 486 ft) MSL.

[c]No background was established in some cases due to the statistical methods for determining this value (including sample size constraints). Background values fall below detection limits in certain cases (e.g., for nitroaromatic compounds).

[d]Only one sample was measured above the detection limit.

[e]Only one sample was taken.

[f]Phase I data.

[g]One outlier sample was measured at 808 mg/L.

[h]One outlier sample was measured at 1.067 mg/L; no Phase I data are available.

Sources: Data from MK-Ferguson Company (1987); MK-Ferguson Company and Jacobs Engineering Group (1988a, 1989a, 1989c).

results have not identified differences in the areas of debris and rubble compared with other areas within the pit. Characterization data for radionuclides, anions, and metals in the sludges are presented in Tables A.9, A.10, and A.11, respectively. Sampling results have not determined the presence of nitroaromatic compounds or cyanides in the sludges; phenols were identified only at levels near the detection limit. Elevated levels of nitrate and sulfate were detected in all of the pits, but fluoride levels were only slightly elevated above background; nitrite and chloride were elevated in pits 1, 2, and 3. Metals and radionuclides were detected in all four pits. Oil and grease, insecticides, and PCBs were detected in a limited number of sludge samples (MK-Ferguson Company and Jacobs Engineering Group 1989d).

A.4 SOILS

In general, the chemical contamination of soils in the southeast portion of the chemical plant area decreases with distance from the raffinate pits. (This trend does not hold for radioactive soil contamination.) Nitrate and sulfate contamination is relatively prevalent in the chemical plant area. A variety of possible sources of nitrates and sulfates are associated with past operations at the chemical plant. Metals contamination in these soils is probably due to the past use of acids (which can act as dissolutioning agents) at the plant. Isolated soil locations within the area of the proposed water treatment plant have elevated levels (i.e., greater than twice the upper background level, which is defined as the 95% confidence level value) of nitrite, arsenic, mercury, lithium, manganese, and selenium. In some cases, elevated levels of contamination were detected in a single borehole. Fluoride, magnesium, and silver were detected at levels elevated above upper background in several boreholes in the area. Uranium and thorium were also detected at low levels in several boreholes, but nitroaromatics, pesticides, PCBs, and semivolatile and volatile organic compounds were not identified in the area of the proposed plant. Soil characterization data are summarized in Table A.12.

A.5 SOUTHEAST DRAINAGE

The Southeast Drainage is a 2.4-km (1.5-mi) channel of an intermittent stream that connects the chemical plant area of the Weldon Spring site to the Missouri River (Figure A.4). This drainage is the proposed discharge route for the water treatment plant effluent (see Section 6.1.2). During past TNT production by the Army at the ordnance works, wastewater was occasionally discharged directly to the Southeast Drainage. During subsequent AEC operations at the chemical plant, the drainage also received effluent from on-site sanitary and process sewers and the raffinate pits. This channel currently receives surface water runoff from the chemical plant area and effluent from the wastewater treatment plant for the on-site project office building. The runoff flows through a 20-cm (8-in.) underground pipe and surfaces approximately 200 m (660 ft) southeast of the fence line of the chemical plant area. The drainage channel continues above ground for approximately 300 m (1,000 ft) to the perimeter fence between the adjacent Army property and the Weldon Spring Wildlife Area. From there, the channel continues in a southeasterly direction across the wildlife area to the Missouri River. To

TABLE A.9 Characterization Results for Radionuclides in the Raffinate Pit Sludges[a]

Radionuclide	Concentration Measure	Concentration (pCi/g, wet weight)			
		Pit 1	Pit 2	Pit 3	Pit 4
Radium-226	Low value	140	300	18	1
	High value	1,700	900	610	200
	Average	840	540	320	72
	SD[b]	420	200	150	58
Radium-228	Low value	19	56	9	4
	High value	110	170	160	1,400
	Average	61	130	64	230
	SD	23	40	41	310
Thorium-228	Low value	18	47	18	3
	High value	120	160	200	1,100
	Average	60	100	91	300
	SD	35	37	44	310
Thorium-230	Low value	12,000	22,000	3,300	8
	High value	34,000	33,000	28,000	6,800
	Average	27,000	27,000	17,000	2,500
	SD	6,200	3,600	5,700	2,300
Thorium-232[c]	Low value	-	-	-	4
	High value	-	-	-	1,400
	Average	-	-	-	320
	SD	-	-	-	340
Total uranium	Low value	620	340	110	10
	High value	1,200	680	1,100	3,400
	Average	840	540	600	570
	SD	190	140	220	790

TABLE A.9 (Cont'd)

Sampling Information	Pit 1	Pit 2	Pit 3	Pit 4
Locations sampled	3	3	9	19
Total number of samples	9	5	41	22

[a]Includes results of samples collected during the second phase of sampling; reported values have been rounded to the nearest integer. A hyphen indicates that data are not available.

[b]SD = standard deviation.

[c]Thorium-232 values for pits 1, 2, and 3 are not reported because they were considered erroneous due to interferences during laboratory analysis caused by high thorium-230 concentrations.

Source: Data from MK-Ferguson and Jacobs Engineering Group (1989e).

the southeast of the chemical plant, the surface topography drops off steeply, and numerous springs and seeps occur along the steep slopes of the drainage (Figure A.5).

Surface runoff from land in the southeast portion of the chemical plant area flows through the Southeast Drainage to the Missouri River. This drainage area is only about 6% of the total 151-ha (373-acre) area drained by the Southeast Drainage. Streamflow data for the Southeast Drainage are available from current sampling locations for the National Pollutant Discharge Elimination System (NPDES) permit issued to DOE by the Missouri Department of Natural Resources. These locations are shown in Figure A.6. Runoff from the southeast portion of the chemical plant area is represented by outfall point NP-0005. Surface flow from rainfall that is intercepted by the process sewer system at the chemical plant and flow from water that enters various building sumps and drains (due to the deteriorating condition of some of the building roofs) are represented by outfall point NP-0001. Point NP-0006 is located at the outfall from the wastewater treatment plant for the on-site office building. Discharge from all three of these locations currently flows down the Southeast Drainage to the Missouri River. The drainage area that influences outfall points NP-0001 and NP-0005 is about 8.4 ha (20.2 acres), and the average flow rate from these points (measured in 1987 when precipitation was sufficient to cause consistent runoff) is about 220 m^3/d (40 gpm). The estimated annual average runoff volume for these points is 42,400 m^3/yr (11,200,000 gal/yr). (This estimate assumes an average annual precipitation of 86 cm [34 in.] and a runoff coefficient of 60%.) The flow in the Southeast Drainage from precipitation events over the entire watershed is on the order of several thousand gallons per minute for a 24-hour rainfall of 2.5 to 5 cm (1 to 2 in.).

TABLE A.10 Characterization Results for Anions in the Raffinate Pit Sludges

Anion	Concentration Measure	Concentration[a] (μg/g)			
		Pit 1	Pit 2	Pit 3	Pit 4
Chloride	Low value	31	ND	ND	ND
	High value	296	87	124	26
	Average	175	40	50	7
	SD[b]	77	28	26	7
Fluoride	Low value	ND	ND	ND	ND
	High value	23	20	51	165
	Average	6	2	23	41
	SD	8	5	14	34
Nitrate	Low value	7,870	2,450	ND	ND
	High value	63,207	76,695	39,500	695
	Average	28,753	40,382	24,554	148
	SD	12,314	26,517	10,640	230
Nitrite	Low value	114	ND	ND	ND
	High value	1,640	688	715	29
	Average	477	186	326	6
	SD	348	230	190	9
Sulfate	Low value	610	18	ND	ND
	High value	7,465	7,683	7,820	1,800
	Average	4,885	6,079	3,456	373
	SD	1,607	1,338	2,529	488

[a]Reported values have been rounded to the nearest integer; ND = not detected.

[b]SD = standard deviation.

Source: Data from MK Ferguson Company and Jacobs Engineering Group (1989d).

TABLE A.11 Characterization Results for Metals in the Raffinate Pit Sludges

Metal	Detection Limit (μg/g)	Concentration Measure	Concentration[a] (μg/g) Pit 1	Pit 2	Pit 3	Pit 4
Aluminum	20	Low	1,278	2,831	473	ND
		High	5,073	7,247	13,970	27,670
		Average	2,601	4,883	5,317	8,953
		SD[b]	882	1,014	2,885	6,984
Antimony	6	Low	ND	ND	11	ND
		High	53	36	87	12
		Average	32	17	31	2
		SD	13	8	18	4
Arsenic	1	Low	64	259	ND	ND
		High	647	983	6,271	771
		Average	400	562	550	107
		SD	184	217	1,124	209
Barium	20	Low	ND	21	18	ND
		High	149	73	333	7,740
		Average	61	48	94	1,127
		SD	37	14	66	2,119
Beryllium	0.5	Low	0.4	4	3	ND
		High	19	13	25	13
		Average	10	9	8	2
		SD	5	2	6	3
Cadmium	0.5	Low	ND	4	2	ND
		High	12	14	8	9
		Average	6	8	3	1
		SD	2	3	2	2
Calcium	500	Low	29,060	24,290	21,110	ND
		High	68,020	49,750	86,100	40,100
		Average	41,002	35,280	40,959	10,681
		SD	9,970	5,698	18,465	10,569
Chromium	1	Low	ND	16	ND	ND
		High	39	170	19	23
		Average	19	36	6	8
		SD	8	30	8	9
Cobalt	5	Low	ND	7	ND	ND
		High	14	21	14	8
		Average	6	13	5	4
		SD	3	4	4	3

TABLE A.11 (Cont'd)

Metal	Detection Limit (μg/g)	Concentration Measure	Concentration[a] (μg/g) Pit 1	Pit 2	Pit 3	Pit 4
Copper	2.5	Low	ND	104	3	ND
		High	238	283	511	1,548
		Average	135	215	232	152
		SD	48	46	147	367
Iron	10	Low	26	8,875	900	ND
		High	12,610	17,200	22,890	21,750
		Average	7,125	13,600	8,936	9,465
		SD	2,590	2,224	5,262	6,652
Lead	0.5	Low	ND	23	ND	ND
		High	253	373	644	158
		Average	108	178	155	33
		SD	77	96	131	39
Lithium	5	Low	ND	ND	ND	ND
		High	ND	18	122	73
		Average	ND	3	29	18
		SD	ND	4	32	17
Magnesium	500	Low	607	5,540	422	ND
		High	16,680	20,610	17,110	13,230
		Average	6,109	12,746	8,354	5,008
		SD	4,504	3,487	3,866	4,640
Manganese	1.5	Low	50	531	152	ND
		High	8,469	7,583	1,880	421
		Average	747	1,856	754	158
		SD	1,537	1,314	509	128
Mercury	0.1	Low	ND	ND	ND	ND
		High	0.15	0.32	15	15
		Average	0.014	0.05	3.2	1.1
		SD	0.041	0.08	3.9	3.6
Molybdenum	4.0	Low	456	451	4	ND
		High	1,520	4,825	1,241	293
		Average	1,001	1,027	506	61
		SD	291	781	273	73
Nickel	4	Low	ND	14	17	ND
		High	1,429	66	8,794	134
		Average	68	30	411	32
		SD	262	9	1,619	39

TABLE A.11 (Cont'd)

Metal	Detection Limit (μg/g)	Concentration Measure	Concentration[a] (μg/g) Pit 1	Pit 2	Pit 3	Pit 4
Potassium	500	Low	ND	ND	ND	ND
		High	1,472	ND	1,075	1,345
		Average	354	ND	267	590
		SD	435	ND	283	509
Selenium	0.5	Low	ND	ND	ND	ND
		High	25	ND	81	33
		Average	2	ND	21	6
		SD	1	ND	23	11
Silver	1	Low	ND	ND	ND	ND
		High	4.2	2.7	1.7	ND
		Average	0.6	0.2	0.6	ND
		SD	1.1	0.6	1.2	ND
Sodium	500	Low	1,007	26	466	ND
		High	8,023	5,638	23,810	1,030
		Average	5,170	2,901	6,637	390
		SD	1,879	1,794	4,405	297
Thallium	1	Low	ND	ND	ND	ND
		High	8	ND	23	58
		Average	1	ND	6	5
		SD	2	ND	6	14
Vanadium	5	Low	33	13	755	ND
		High	7,805	5,187	8,660	1,900
		Average	4,003	2,925	2,808	381
		SD	1,889	1,099	1,887	514
Zinc	2	Low	40	50	20	ND
		High	6,693	248	213	1,075
		Average	631	135	88	104
		SD	1,408	47	55	252
Zirconium	20	Low	ND	54	ND	ND
		High	231	277	1,121	290
		Average	122	138	228	60
		SD	76	58	285	98

[a]Reported values have been rounded to the nearest integer, except for the low concentration of beryllium in pit 1, all values of mercury, and all values of silver (rounded to first decimal point). ND = not detected.

[b]SD = standard deviation.

Source: Data from MK-Ferguson Company and Jacobs Engineering Group (1989d).

TABLE A.12 Soil Characterization Results in the Vicinity of the Proposed Water Treatment Plant

Contaminant	Unit	Average Concentration[a]	
		Borehole Samples	Surface Samples
Metals			
Arsenic	μg/g	8	7
Barium	μg/g	157	141
Beryllium	μg/g	1	1
Cadmium	μg/g	1	1
Chromium	μg/g	18	19
Cobalt	μg/g	12	10
Copper	μg/g	26	16
Iron	μg/g	18,128	16,577
Lead	μg/g	21	35
Manganese	μg/g	966	2,064[b]
Mercury	μg/g	1[b]	ND[c]
Nickel	μg/g	16	15
Selenium	μg/g	1	ND
Silver	μg/g	0.3	0.7
Thallium	μg/g	8[d]	ND
Vanadium	μg/g	33	35
Zinc	μg/g	28	33
Anions			
Chloride	μg/g	4	4
Fluoride	μg/g	7	8
Nitrate	μg/g	3	2
Sulfate	μg/g	462[b]	6
Radionuclides			
Thorium-230	pCi/g	1.6	3.0
Uranium-238	pCi/g	2.7	7.7

See next page for footnotes

TABLE A.12 (Cont'd)

---

[a]Average concentration = mean of detected values reported from all sources listed; the reported values have been rounded to the nearest integer, except for silver, thorium-230, and uranium-238 (rounded to first decimal point). Borehole samples were taken from depths of up to 6.7 m (22 ft); surface samples consisted of the 0- to 0.6-m (0- to 2-ft) interval.

[b]Above upper background.

[c]ND = not detected.

[d]One sample only; this value has been corrected from the reported value (MK-Ferguson Company and Jacobs Engineering Group 1989f) as a result of the ongoing data validation effort for the project.

Sources: Data from Marutzky et al. (1988); MK-Ferguson Company and Jacobs Engineering Group (1989b, 1989f).

The mean values for total uranium in surface water sampled from NPDES outfalls NP-0005 and NP-0001 are 764 and 682 pCi/L, respectively (MK-Ferguson Company and Jacobs Engineering Group 1989a, 1989h). Contamination in soils and structures at the chemical plant area contributes to the elevated uranium levels at NP-0005. The chemical plant process and sanitary sewer systems also contain uranium contamination, as may various building sumps and drains; these sources contribute to the elevated uranium levels at NP-0001. Samples from four of the six springs in the Southeast Drainage contained uranium concentrations above background. Contaminant levels in surface water samples from NPDES outfalls and springs in the Southeast Drainage are presented in Table A.13.

The mean levels of nitrate measured at NPDES outfalls NP-0001 and NP-0005 are 5.7 and 117 mg/L, respectively (MK-Ferguson Company and Jacobs Engineering Group 1989a, 1989h). The elevated nitrate concentration in NP-0005 suggests that a nitrate source exists within the southeast portion of the chemical plant area, and in fact several soil locations in this portion of the site have elevated nitrate levels. Measurements of nitrate in most springs of the Southeast Drainage are above background levels.

Elevated sulfate levels have been identified in two springs of the Southeast Drainage. Sulfuric acid may have been previously stored along the eastern boundary of the chemical plant during the operational period of the ordnance works. Surface runoff over contaminated soil resulting from this storage may be the source of sulfate in these springs. Nitroaromatic compounds were detected in concentrations slightly above the analytical detection limits in samples from NP-0001 and NP-0005 and from two springs in the drainage. Based on tracing studies, one of these springs also appears to receive water from a separate nitroaromatic-contaminated source.

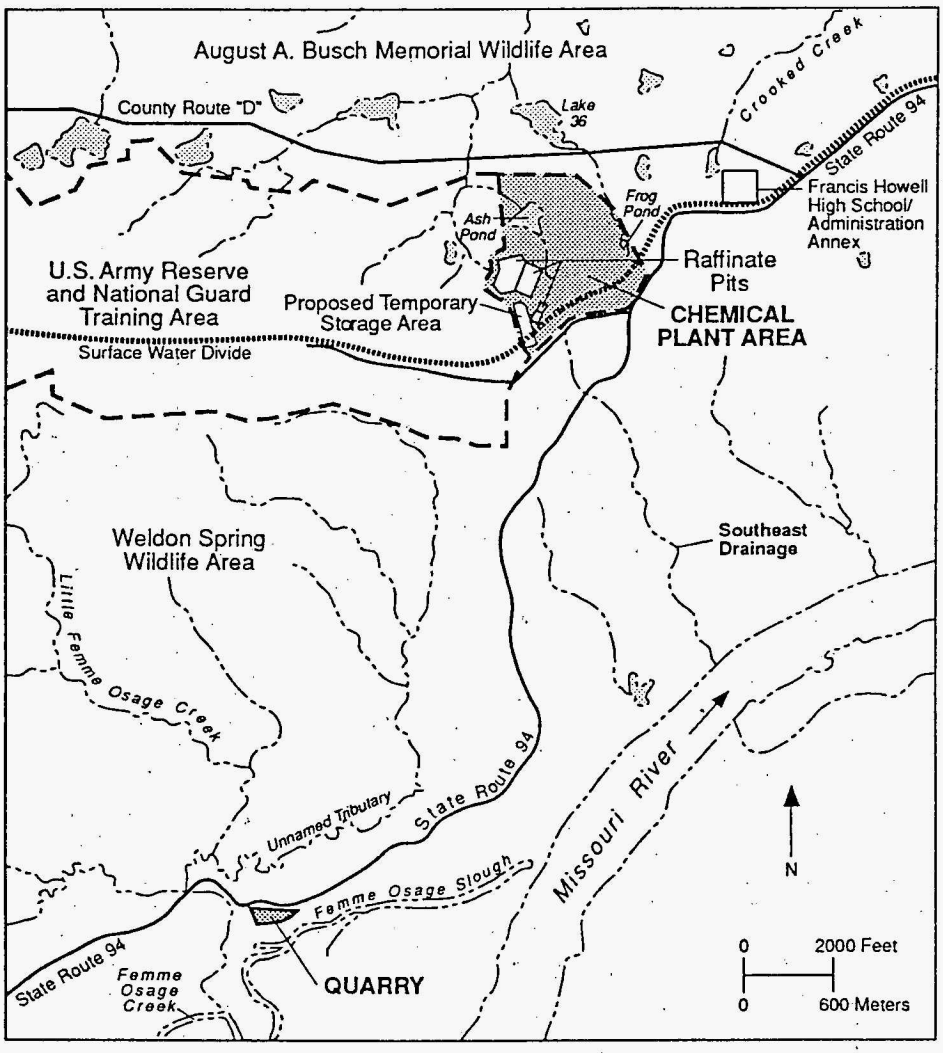

FIGURE A.4 Location of the Southeast Drainage (Source: Modified from ANL 1990)

The eastern half of the chemical plant area is covered by pavement and buildings, and infiltration from the surface is largely confined to storm ditches and possibly to leaking underground storm sewers. Wells in the vicinity of these features may receive more discrete discharges. To the south, flow in the upper zone of the shallow bedrock aquifer is discharged along the alluvium of the Missouri River floodplain, creating a constant discharge boundary. Discharge to the alluvium of the Missouri River floodplain occurs through springs and seeps and underground discharges and recharges. These flows are probably the major forces controlling the location of the regional groundwater divide in the shallow bedrock aquifer in the vicinity of the chemical plant area. The interrelationships of surface water and groundwater in the Southeast Drainage are shown in Figure A.7. Four losing stream segments (Figure A.8) were identified during a water-tracing study conducted in the Southeast Drainage in October 1987 (Missouri Department of Natural Resources 1989). A swallow hole was observed just south of the

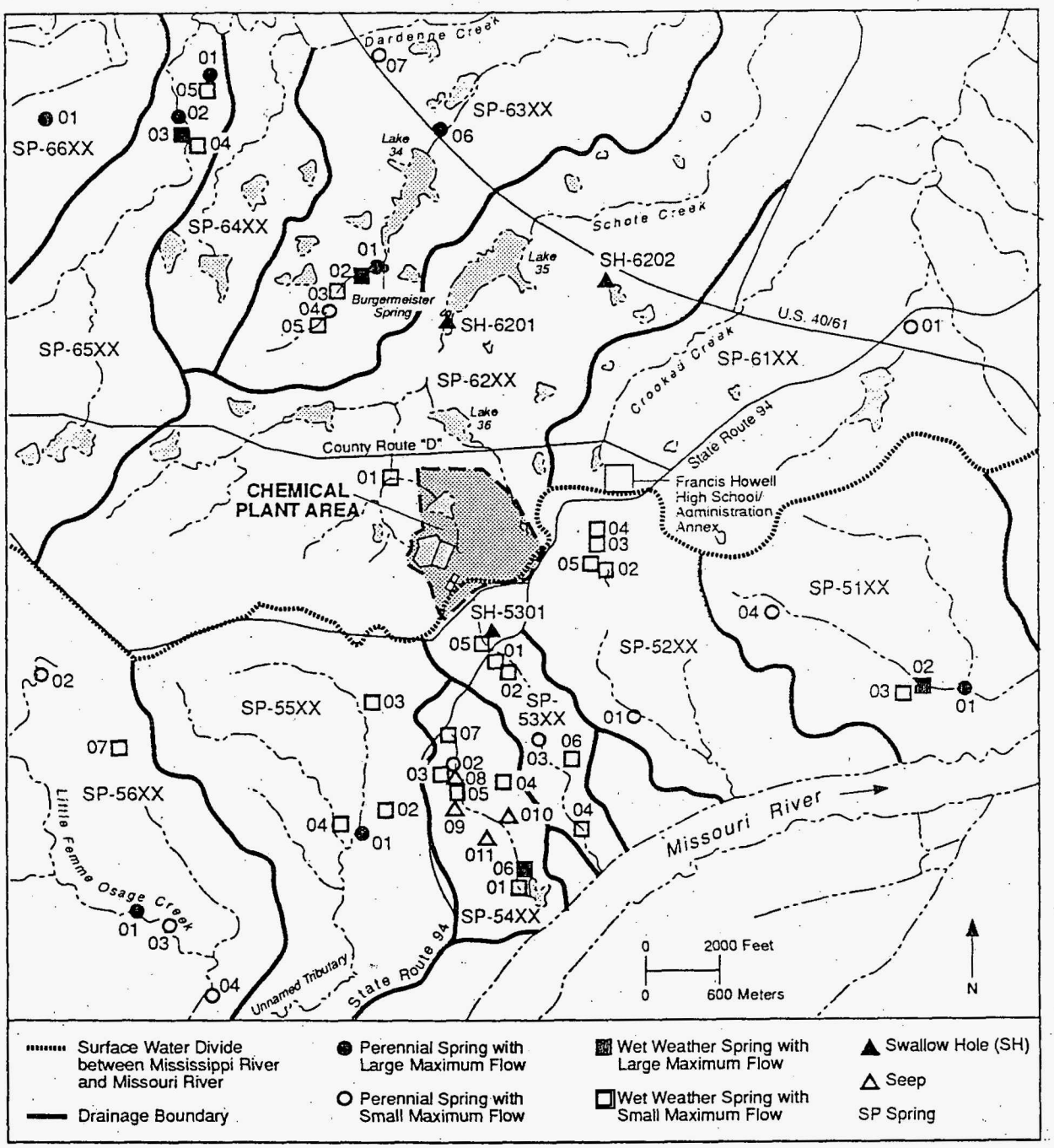

FIGURE A.5 Springs and Seeps in the Vicinity of the Weldon Spring Site (a drainage series is identified by the first two numbers following the spring [SP] or swallow hole [SH] designation; e.g., SP-55XX indicates springs in the 55-series drainage, such as SP-5501 to SP-5504) (Source: Modified from Missouri Department of Natural Resources 1989)

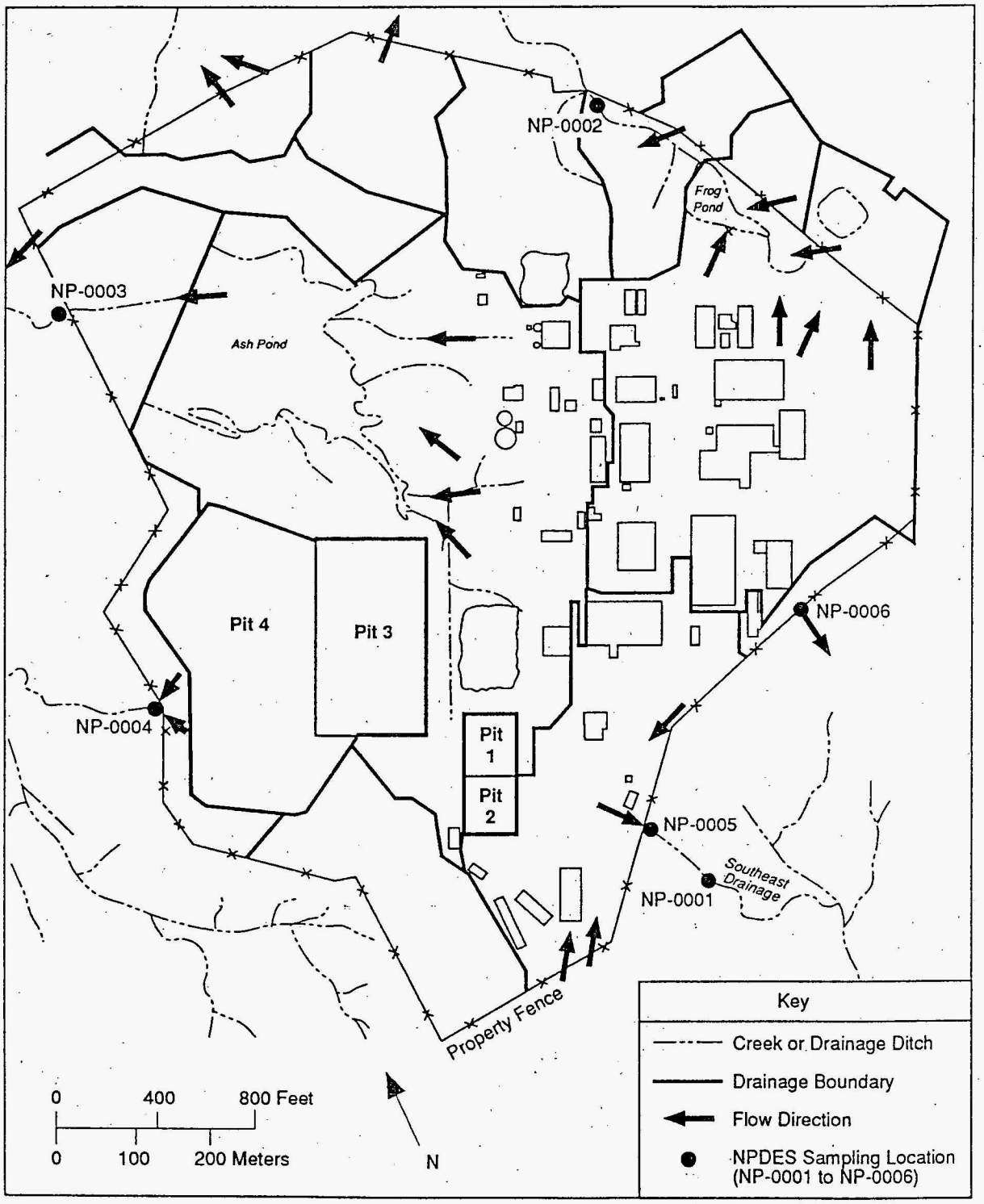

FIGURE A.6 Surface Water Outfall (NPDES) Sampling Locations and Flow Directions at the Chemical Plant Area

TABLE A.13 Radiological and Chemical Characterization of Surface Water Discharges and Springs in the Southeast Drainage[a]

Sampling Point[b]	Concentration of Total Uranium (pCi/L)		Concentration of Nitrate (mg/L)	
	Range	Mean	Range	Mean
NP-0001	270-1,200	682	1.10-10	5.72
NP-0005	240-1,200	764	0.2-281	117
SP-5301	80-380	227	50.5-81.5	-
SP-5302	96-280	-	93.0	-
SP-5303	95-260	192	35.9-37.6	-
SP-5304	86-130	102	23.0-31.9	-
SP-5306	<1.00	-	3.10	-

Sampling Point[b]	Concentration of Nitroaromatic Compounds[c] (μg/L)		
	2,4,6-TNT	2,4-DNT	2,6-DNT
NP-0001	<0.5	<0.2	<0.6-0.8
NP-0005	<0.5	<0.2-0.3	<0.6-0.7
SP-5301	<0.5	<0.2	<0.6
SP-5302	19.7-22.0	<0.2	<0.6
SP-5303	1.28-4.80	<0.2	<0.6
SP-5304	<0.5	<0.2	<0.6
SP-5306	<0.5	<0.2	<0.6

[a]A hyphen indicates that data are not available; a less than symbol (<) indicates that the measurement was less than the detection limit for that parameter.

[b]NP indicates an NPDES outfall; SP indicates a spring.

[c]The concentration represents the range, where available, from all sources listed.

Sources: MK-Ferguson Company and Jacobs Engineering Group (1989a, 1989g, 1989h).

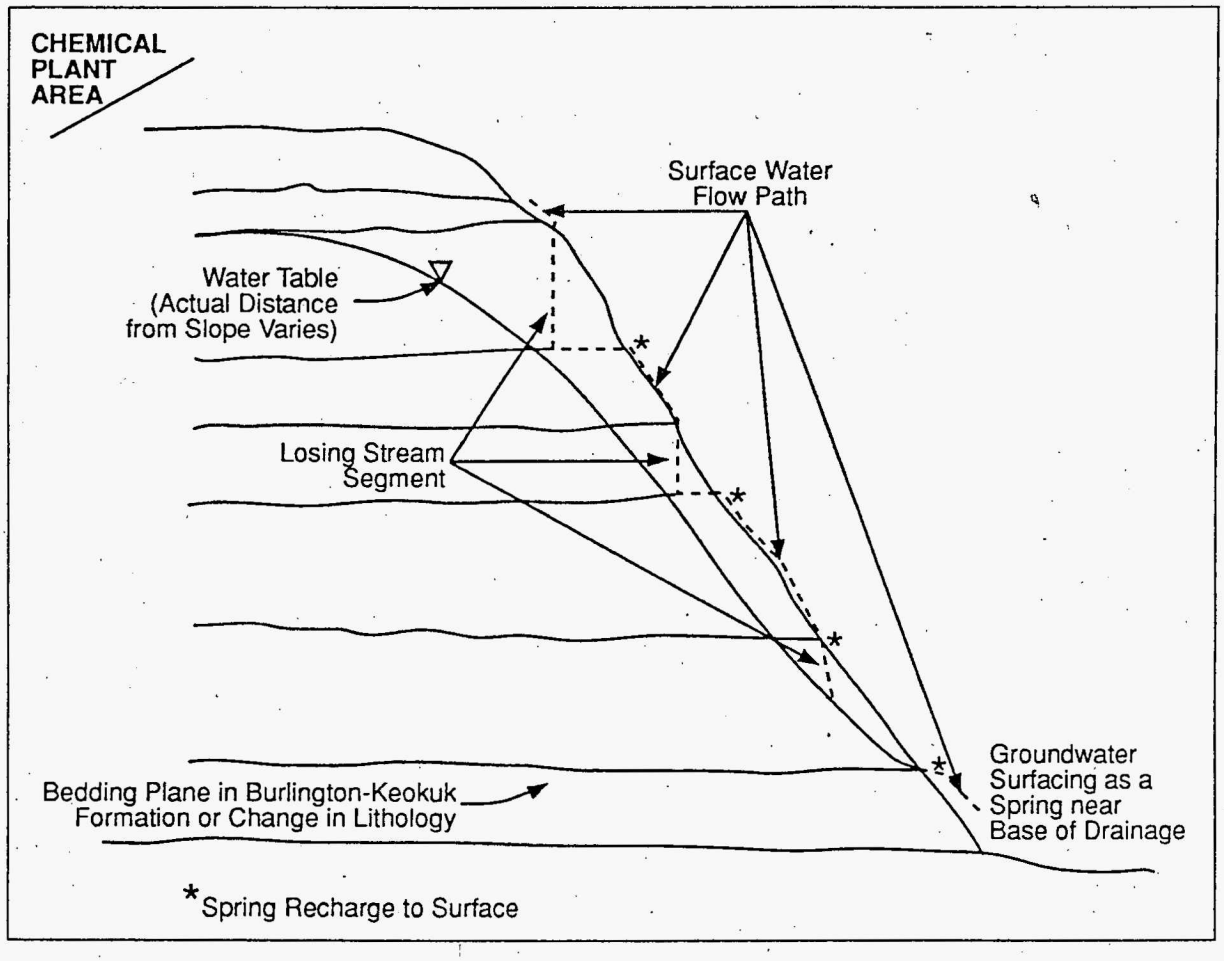

FIGURE A.7 Relationships of Surface Water and Groundwater in the Southeast Drainage

Army Reserve Training Area where all flow disappeared; water was then observed to alternately seep into and resurge from the streambed at four different points. Each losing stream segment in the valley appears to be part of the recharge area for the next spring downstream. These results indicate that a groundwater divide exists north of the area and that the water lost to the streambed stays within the drainage boundary, i.e., the flow is self-contained.

Soil and sediment in the Southeast Drainage have been surveyed for radioactive contamination (Boerner et al. 1986; Deming et al. 1986). Surface and shallow borehole samples and direct radiation measurements were taken from the drainage on the Army Reserve property and on the Weldon Spring Wildlife Area. These data are shown in Table A.14. Concentrations of total uranium in the sediments ranged from 6 to 20 pCi/g (compared with a background concentration of 2.4 pCi/g [Marutzky et al. 1988]). Gamma exposure rates measured at 1 m (3 ft) above the ground surface in the drainage ranged from 8 to 29 μR/h at the Army Reserve Training Area and from 7 to 46 μR/h at the

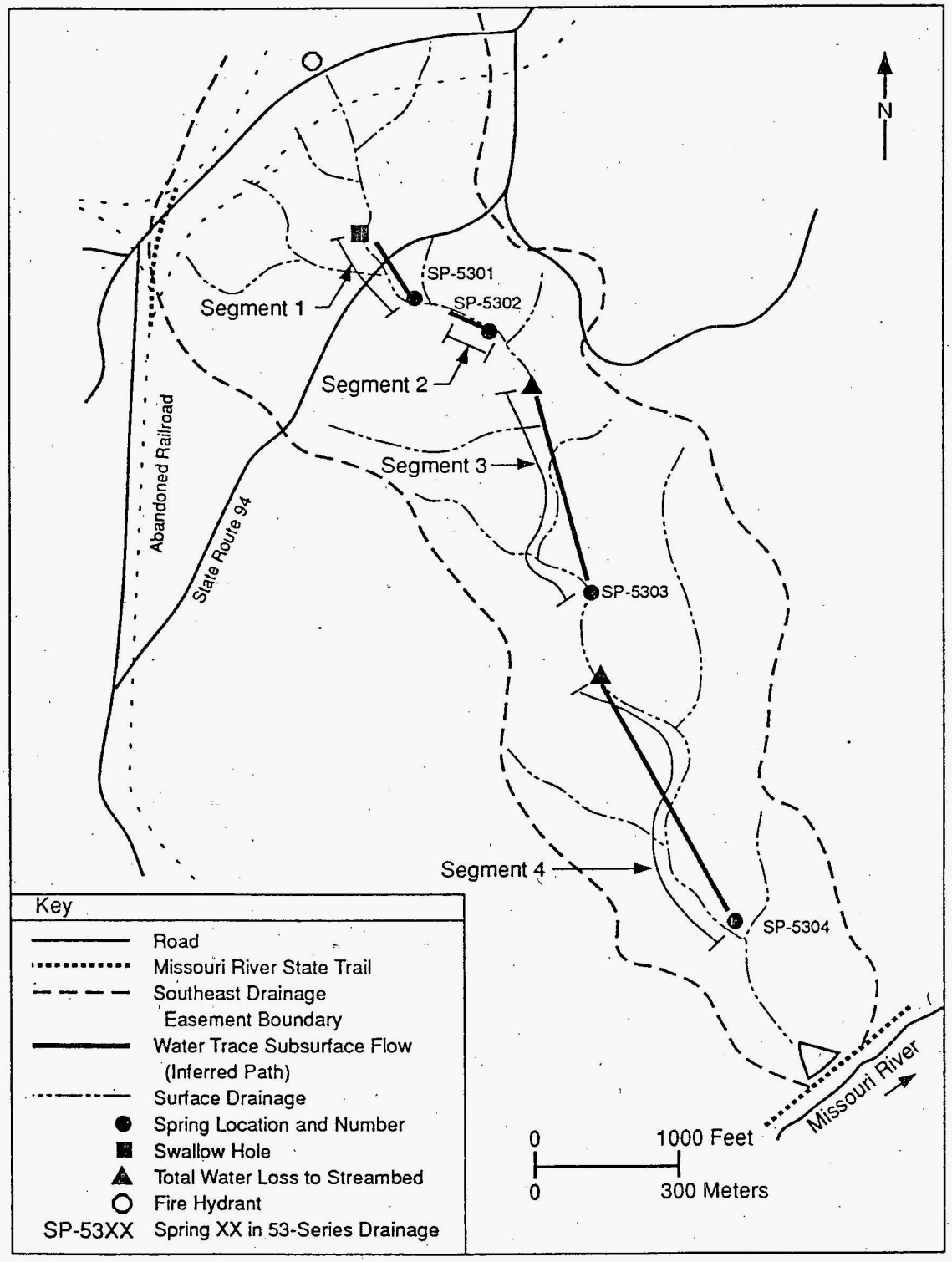

FIGURE A.8 Losing Stream Segments in the Southeast Drainage (Source: Modified from Missouri Department of Natural Resources 1989)

TABLE A.14 Radioactive Soil Contamination in the Southeast Drainage

Sample Type	Radionuclide	Concentration[a] (pCi/g) Army Reserve Training Area	Weldon Spring Wildlife Area
Surface soil	Radium-226	0.76-8.36	2.57-110
	Thorium-230	-	5,610; 10,100[b]
	Thorium-232	0.43-2.69	0.51-240
	Uranium-238	<0.76-42.0	<28.6-720
Borehole	Radium-226	2.04-210	2.82-130
	Thorium-230	11.5; 4.15[c]	-
	Thorium-232	0.88-69.1	0.51-150
	Uranium-238	≤1,010	9.58-180

[a]A hyphen indicates that data are not available; a less than symbol (<) indicates that the measurement was less than the detection limit for that parameter.

[b]Average and maximum values, respectively.

[c]Values for 0.15- to 0.3-m (0.5- to 1-ft) and 0.3- to 0.46-m (1- to 1.5-ft) depths, respectively.

Sources: Data from MK-Ferguson Company and Jacobs Engineering Group (1989a, 1989b).

Weldon Spring Wildlife Area. The rates measured at the ground surface were 7 to 120 μR/h and 24 to 300 μR/h for the Army property and wildlife area, respectively.

The lateral extent and depth of radioactive contamination in the drainage varies. On the Army property, contamination was detected to at least 0.6 m (2 ft) below the soil surface in most of the borehole locations. In the wildlife area, soil contamination was detected up to 11 m (36 ft) from the ditch centerline and extended to depths exceeding 0.3 m (1 ft) within the drainage, based on samples from shallow boreholes; however, the drilling depth was restricted in most cases due to the presence of subsurface rocks. Contamination could extend to deeper than 1 m (3 ft) in some areas of the drainage. In the downstream section, much of the drainage bed is solid bedrock. Therefore, the average depth of contamination is probably less than 0.3 m (1 ft), except at the mouth of the drainage where contamination has been detected to a depth of 0.6 m (2 ft) in some locations.

A.6 OTHER AFFECTED SURFACE FEATURES

Construction of a water treatment plant at the chemical plant area would require the removal of some deteriorating railroad ties and Building 302, a former nonprocess building. The locations of these features are shown in Figure A.9. The railroad ties contain low levels of radioactive contamination, generally limited to depths of less than 3 cm (1.2 in.). Building 302 is a one-story structure with (1) a process area of 6.7 m × 14.6 m × 9.1 m (22 ft × 48 ft × 30 ft), (2) a warehouse of 446 m^2 × 3.7 m (4,800 ft^2 × 12 ft), (3) a battery charging area of 3.7 m × 3.7 m × 3.7 m (12 ft × 12 ft × 12 ft), and (4) a restroom of 3.3 m^2 × 3.7 m (36 ft^2 × 12 ft). The building is constructed of concrete blocks with a steel frame, a concrete floor, and a flat, built-up roof. It was used during the operational period of the chemical plant for pelletizing and storing drums that contained magnesium chips and for processing and repackaging the magnesium. The building is currently used for storage and contains various pieces of equipment, including a process hopper, magnetic separator beams and columns, sampler drums, carbon plates, iron cartridges, cabinets, lighting and heating equipment (e.g., water heater and steam pipes) and restroom fixtures.

Building 302 was recently characterized to determine the nature and extent of radioactive and chemical contamination (MK-Ferguson Company and Jacobs Engineering Group 1988d, 1990a, 1990b). This characterization identified slight contamination with PCBs, asbestos, and radionuclides. To assess the extent of PCB contamination, samples were taken both in areas of visible oily spills and in areas where no suspect residue was visible. Of eight swipe samples, one had a concentration of 133 μg/100 cm^2 whereas seven had concentrations of <1 μg/100 cm^2. Ballasts of the fluorescent light fixtures were also sampled, but no PCB contamination was detected. Some pipe insulation and transite panels in Building 302 are contaminated with asbestos; the total volume of this material has been estimated to be 14 m^3 (50 ft^3). Radioactive contamination is generally surficial, e.g., windblown dust. Additional characterization will be conducted prior to and during building dismantlement to ensure worker safety and to support decontamination activities.

The dismantling of Building 302 would include the following activities (in order):

- Manual decontamination of all radioactively contaminated surfaces (e.g., by aggressively vacuuming/wiping equipment exteriors and building interiors/exteriors), with containment and storage on-site of all radioactively contaminated materials;

- Removal of all PCB-contaminated materials (e.g., using a solvent wipe procedure), with containment and storage on-site;

- Isolation of all asbestos-containing materials (e.g., in plastic bags), with containment and storage on-site of any radioactively contaminated materials and possible future transport off-site to an approved landfill of nonradioactively contaminated materials;

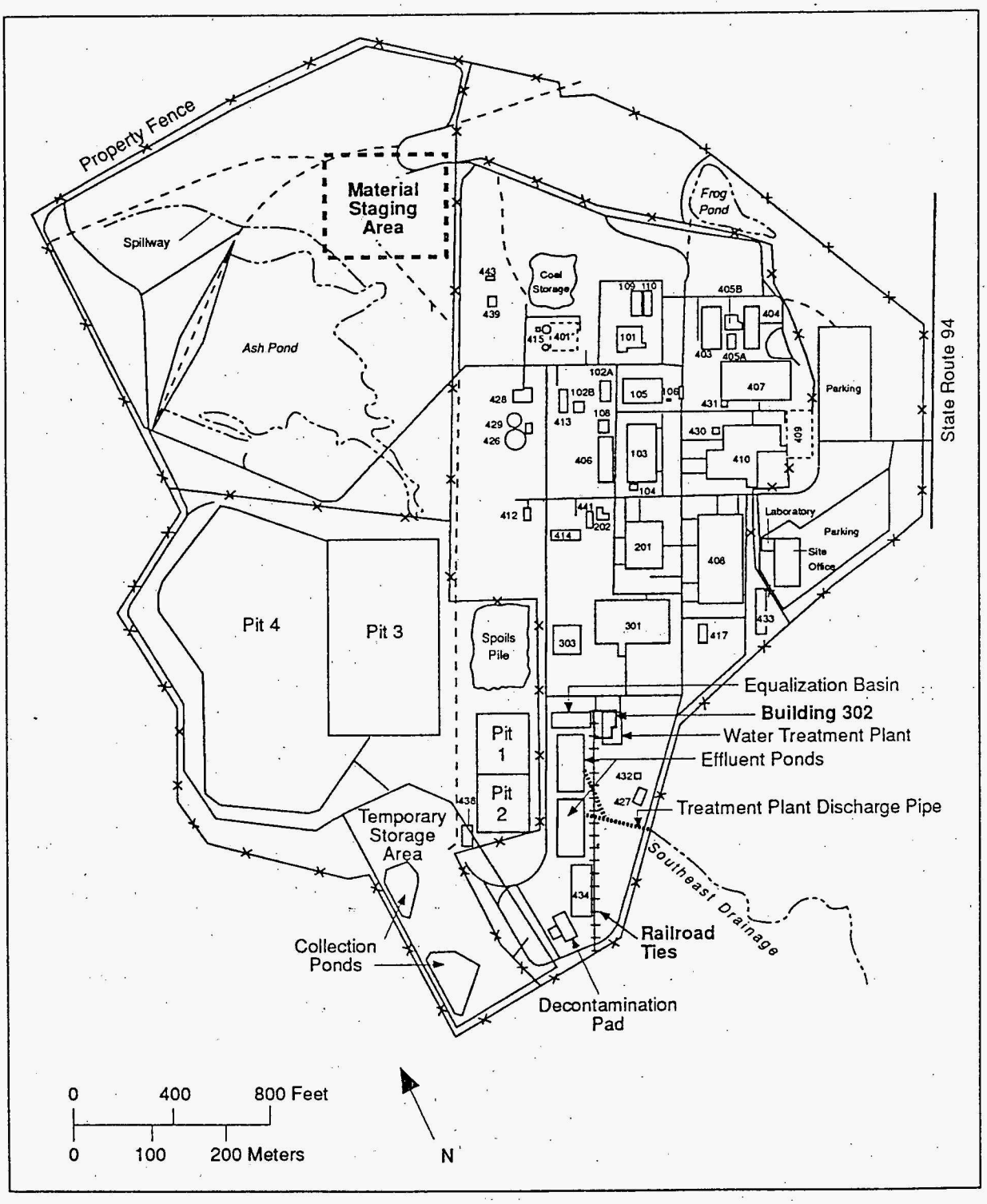

FIGURE A.9 Locations of Building 302, Railroad Ties, and the Proposed Material Staging Area (Source: Modified from MK-Ferguson Company and Jacobs Engineering Group 1988d, 1988e)

- Follow-on decontamination of structural surfaces, as appropriate, to remove radioactive contamination;

- Dismantlement of all structures, with further decontamination of previously inaccessible surfaces during dismantlement;

- Placement of all radioactively contaminated materials in a controlled area for temporary storage; and

- Salvage or possible transport off-site of nonradioactively contaminated materials to an approved receiving facility, as appropriate.

These activities are similar to those implemented for the recent dismantlement of the steam plant and administration buildings (Buildings 401 and 409, respectively). Building 302 would be dismantled in accordance with all applicable or relevant and appropriate requirements and procedures. At-grade or below-grade material that remained following building dismantlement would be decontaminated and excavated. In general, the building floors that are radioactively contaminated contain (1) loose dust deposits, which could be removed by aggressive vacuuming and/or (2) limited, fixed contamination, which could be removed by scarifying (measured radioactivity is at background levels within 2 cm [1 in.] of the surface [MK-Ferguson Company and Jacobs Engineering Group 1988d, 1990a, 1990b]). Dust-control measures, such as wetting and covering surfaces, would be employed to minimize particulate emissions during all activities associated with dismantlement. Air in the work area would be monitored for asbestos and radioactive particulates as part of a comprehensive detection and mitigation system. Asbestos- and PCB-handling and disposal activities would comply with safe practices and regulatory requirements (see Appendix D). This compliance would ensure the protection of workers on-site and would limit the potential for contaminant releases off-site. The railroad ties would be removed with conventional equipment and placed in controlled storage on-site, pending the determination of related release criteria.

A material staging area (MSA) would be prepared to store the radioactively contaminated solids, i.e., materials resulting from building and railroad dismantlement activities, pending a decision on their ultimate disposition. The MSA design would include a low-permeability liner, a runon/runoff control system, and covers (e.g., geotextile fabric or emulsion) to protect any stored materials subject to wind and water dispersal.

The general location of the proposed MSA is shown in Figure A.9. The soils of this area have been studied extensively to determine if they are contaminated. The Phase I chemical soil investigation program was recently completed at the Weldon Spring site (MK-Ferguson Company and Jacobs Engineering Group 1988c); the results indicate that only nitrate and sulfate levels are slightly elevated and that no chemical hazards exist in the area proposed for the MSA. A focused soil characterization was subsequently conducted at the MSA location. Under this follow-on study, soil samples were analyzed for metals, inorganic anions (nitrate, sulfate, chloride, and fluoride), and nitroaromatics;

select samples were also analyzed for pesticides, PCBs, and semivolatile organic compounds. The results of these analyses indicate that concentrations of nitrates and sulfates are above the range of on-site background concentrations; metals are within the background range; and only limited organic contaminants are present, including phthalates and the pesticide aldrin. No soil contamination was detected that would impact the construction or performance of the MSA (MK-Ferguson Company and Jacobs Engineering Group 1989b).

A comprehensive radiological characterization of the MSA location was also recently completed (Marutzky et al. 1988). The results indicate that radium-226 and thorium-232 are generally present in concentrations typical of background levels; measurements ranged from less than 1 to 2 pCi/g, including background. Thus, no radioactive contamination exists above guidelines for thorium and radium in soil (see Appendix D). Measured concentrations of total uranium -- for which no such guidelines exist -- were similarly low, ranging from less than 0.3 to 6.3 pCi/g, including background. The average ambient concentration of total uranium that occurs naturally in soil is about 2 pCi/g. Therefore, no adverse impacts are expected during construction of the MSA (MK-Ferguson Company and Jacobs Engineering Group 1988e). The air in the MSA workplace would be monitored for radioactive particulates during the construction period. If elevated levels were detected, mitigative measures would be implemented (e.g., wetting and covering surfaces) to ensure the health and safety of workers, the public, and the environment.

A.7 REFERENCES (APPENDIX A)

Anonymous, undated, *A Synopsis of the Chemical Quality of the Raffinate Pits and Their Surroundings.*

Argonne National Laboratory, 1990, *Feasibility Study for Management of the Bulk Wastes at the Weldon Spring Quarry, Weldon Spring, Missouri*, DOE/OR/21548-104, prepared by Argonne National Laboratory, Environmental Assessment and Information Sciences Division, Argonne, Ill., for U.S. Department of Energy, Oak Ridge Operations Office, Weldon Spring Site Remedial Action Project, Weldon Spring, Mo., Feb.

Boerner, A.J., et al., 1986, *Radiological Survey of the August A. Busch and Weldon Spring Wildlife Areas, Weldon Spring Site, St. Charles County, Missouri*, prepared by Oak Ridge Associated Universities, Oak Ridge, Tenn., for U.S. Department of Energy, Division of Remedial Action Projects, Final Report, April.

Deming, E.J., et al., 1986, *Radiological Survey, U.S. Army Reserve Property, Weldon Spring Site, St. Charles County, Missouri*, prepared by Oak Ridge Associated Universities, Oak Ridge, Tenn., for U.S. Department of Energy, Division of Remedial Action Projects, Final Report, Jan.

Lenhard, J.A., F.H. Belcher, and J.N. Holt, 1967, *Weldon Spring Raffinate Pits and Quarry Task Force Report*, prepared for U.S. Atomic Energy Commission, Oak Ridge Operations Office, Oak Ridge, Tenn., June 1.

MacDonell, M.M., J.M. Peterson, and I.E. Joya, 1989, *Engineering Evaluation/Cost Analysis for the Proposed Management of Contaminated Water in the Weldon Spring Quarry*, DOE/OR/21548-039, prepared by Argonne National Laboratory, Energy and Environmental Systems Division, Argonne, Ill., for U.S. Department of Energy, Oak Ridge Operations Office, Weldon Spring Site Remedial Action Project, Weldon Spring, Mo., Jan.

Marutzky, S.J., R. Colby, and L.S. Cahn, 1988, *Radiologic Characterization of the Weldon Spring, Missouri, Remedial Action Site*, UNC/GJ-HMWP-4; DOE/ID/12584-22, prepared by UNC Geotech, Inc., Grand Junction, Colo., for U.S. Department of Energy, Weldon Spring Site Remedial Action Project, Weldon Spring, Mo., Feb.

Missouri Department of Natural Resources, 1989, *Shallow Groundwater Investigations at Weldon Spring, Missouri, Second Annual Report for Fiscal Year 1989*, prepared by Division of Geology and Land Survey, Rolla, Mo., for U.S. Department of Energy, Weldon Spring Site Remedial Action Project, St. Charles, Mo., Dec.

MK-Ferguson Company, 1987, *Phase I Water Quality Assessment*, DOE/OR/21548-003, prepared for U.S. Department of Energy, Oak Ridge Operations Office, Weldon Spring Site Remedial Action Project, Weldon Spring, Mo., Dec.

MK-Ferguson Company and Jacobs Engineering Group, 1988a, *Hydrogeologic Investigations Sampling Plan*, DOE/OR/21548-020, Rev. 0, prepared for U.S. Department of Energy, Oak Ridge Operations Office, Weldon Spring Site Remedial Action Project, Weldon Spring, Mo., Nov.

MK-Ferguson Company and Jacobs Engineering Group, 1988b, *Annual Environmental Monitoring Report, Weldon Spring, Missouri, Calendar Year 1987*, DOE/OR/21548-015, prepared for U.S. Department of Energy, Oak Ridge Operations Office, Weldon Spring Site Remedial Action Project, Weldon Spring, Mo.

MK-Ferguson Company and Jacobs Engineering Group, 1988c, *Phase I Chemical Soil Investigation Data Report for the Weldon Spring Chemical Plant/Raffinate Pits*, DOE/OR/21548-016, prepared for U.S. Department of Energy, Oak Ridge Operations Office, Weldon Spring Site Remedial Action Project, Weldon Spring, Mo., Jan.

MK-Ferguson Company and Jacobs Engineering Group, 1988d, *Buildings Characterization Sampling Plan*, DOE/OR/21548-021, prepared for U.S. Department of Energy, Oak Ridge Operations Office, Weldon Spring Site Remedial Action Project, Weldon Spring, Mo., Aug.

MK-Ferguson Company and Jacobs Engineering Group, 1988e, *Proposed Interim Response Action #3, Material Staging Area*, DOE/OR/21548-032, Rev. 0, prepared for U.S. Department of Energy, Oak Ridge Operations Office, Weldon Spring Site Remedial Action Project, Weldon Spring, Mo., July.

MK-Ferguson Company and Jacobs Engineering Group, 1988f, unpublished data, Weldon Spring Site Remedial Action Project, Weldon Spring, Mo.

MK-Ferguson Company and Jacobs Engineering Group, 1989a, unpublished data, Weldon Spring Remedial Action Project, Weldon Spring, Mo.

MK-Ferguson Company and Jacobs Engineering Group, 1989b, *Chemical Soil Data Report to Support Interim Response Actions, Construction Staging Area and Administration Building*, DOE/OR/21548-051, Rev. 0, prepared for U.S. Department of Energy, Oak Ridge Operations Office, Weldon Spring Site Remedial Action Project, Weldon Spring, Mo., Feb.

MK-Ferguson Company and Jacobs Engineering Group, 1989c, *Draft: Phase II Groundwater Quality Assessment for the Weldon Spring Site Chemical Plant, Raffinate Pits, and Surrounding Vicinity Properties*, DOE/OR/21548-078, Rev. B, prepared for U.S. Department of Energy, Oak Ridge Operations Office, Weldon Spring Site Remedial Action Project, Weldon Spring, Mo., June.

MK-Ferguson Company and Jacobs Engineering Group, 1989d, *Waste Assessment Chemical Characterization of the Weldon Spring Site Raffinate Pits*, DOE/OR/21548-092, Rev. 0, prepared for U.S. Department of Energy, Oak Ridge Operations Office, Weldon Spring Site Remedial Action Project, Weldon Spring, Mo., Aug.

MK-Ferguson Company and Jacobs Engineering Group, 1989e, *Waste Assessment Radiological Characterization of the Weldon Spring Site Raffinate Pits*, DOE/OR/21548-062, Rev. 0, prepared for U.S. Department of Energy, Oak Ridge Operations Office, Weldon Spring Site Remedial Action Project, Weldon Spring, Mo., Aug.

MK-Ferguson Company and Jacobs Engineering Group, 1989f, *Chemical Soil Investigation Report for the Weldon Spring Chemical Plant/Raffinate Pits, Phase II*, DOE/OR/21548-061, Rev. 0, prepared for U.S. Department of Energy, Oak Ridge Operations Office, Weldon Spring Site Remedial Action Project, Weldon Spring, Mo., Aug.

MK-Ferguson Company and Jacobs Engineering Group, 1989g, *Phase I Spring and Seep Report*, DOE/OR/21548-045, Rev. 0, prepared for U.S. Department of Energy, Oak Ridge Operations Office, Weldon Spring Site Remedial Action Project, Weldon Spring, Mo., Aug.

MK-Ferguson Company and Jacobs Engineering Group, 1989h, *Annual Environmental Monitoring Report, 1988*, DOE/OR/21548-079, Rev. 0, prepared for U.S. Department of Energy, Oak Ridge Operations Office, Weldon Spring Site Remedial Action Project, Weldon Spring, Mo., June.

MK-Ferguson Company and Jacobs Engineering Group, 1990a, *Asbestos and Chemical Characterization Report for Non-Process Related Buildings and Equipment*, DOE/OR/21548-070, Rev. E, prepared for U.S. Department of Energy, Oak Ridge Operations Office, Weldon Spring Site Remedial Action Project, Weldon Spring, Mo., April.

MK-Ferguson Company and Jacobs Engineering Group, 1990b, *Buildings Radiological Characterization Report*, DOE/OR/21548-120, Rev. 0, prepared for U.S. Department of Energy, Oak Ridge Operations Office, Weldon Spring Site Remedial Action Project, Weldon Spring, Mo., April.

Oak Ridge National Laboratory, 1987, *Weldon Spring, Missouri, Raffinate Pits 1, 2, 3, and 4: Preliminary Grout Development Screening Studies for In-Situ Waste Immobilization*, ORNL/TM-9264, Oak Ridge, Tenn., April.

U.S. Department of Energy, 1987, *Draft Environmental Impact Statement, Remedial Action at the Weldon Spring Site*, DOE/EIS-0117D, Office of Remedial Action and Waste Technology, Feb.

U.S. Department of Energy, 1990, *Radiation Protection of the Public and the Environment*, DOE Order 5400.5, Feb. 8.

U.S. Environmental Protection Agency, 1980, *Water Quality Criteria Documents; Availability*, Federal Register, *45*(231):79333, Nov. 28.

U.S. Environmental Protection Agency, 1985, *National Primary Drinking Water Regulations; Synthetic Organic Chemicals, Inorganic Chemicals and Microorganisms, Proposed Rule*, Federal Register, *50*(219):46958, Nov. 13.

U.S. Geological Survey, 1987, *Contamination of Water Resources at the Weldon Spring Radioactive Waste-Disposal Sites*, July 10.

APPENDIX B:

SCREENING OF TREATMENT TECHNOLOGIES FOR APPLICABILITY TO THE PROPOSED ACTION

APPENDIX B:

SCREENING OF TREATMENT TECHNOLOGIES FOR APPLICABILITY TO THE PROPOSED ACTION

Physical, chemical, and biological treatment technologies that might be used to support the proposed action are listed in Table B.1. The potential applicability of each specific technology to the treatment objectives of the proposed action is also identified, i.e., in terms of removing the contaminants of concern from the surface waters impounded at the chemical plant area; these contaminants are identified in Section 2.4.5 and Chapter 7 of this report. Although potential technologies are listed singly, they must be integrated with other technologies to form an effective treatment system for the impounded surface waters. The treatment technologies listed in Table B.1 are described in Sections B.1, B.2, and B.3 of this appendix and are screened for applicability to the proposed action in terms of technical feasibility and implementation considerations.

B.1 PHYSICAL TREATMENT TECHNOLOGIES

B.1.1 Equalization/Detention

Equalization/detention involves the storage of influent flows in a tank or basin prior to their introduction into a treatment plant. The purpose of this storage is to reduce variations in influent volume and concentration. The technology permits the flow volumes and contaminant levels entering a treatment plant to be averaged over time periods longer than those of typical influent fluctuations. Because the water to be treated under the proposed action derives from several sources, and because influent variability can adversely affect the efficiency of unit operations of a comprehensive treatment system, equalization is considered an essential process. Thus, equalization/detention is applicable to the proposed action.

B.1.2 Density Separation

Density separation is used to remove suspended solids from a liquid waste stream and is typically combined with other treatment processes, e.g., to remove solids generated by precipitation and flocculation. It can also be used as a pretreatment step to remove settleable solids in influent wastewater. Density separation technologies are commonly used in wastewater treatment operations and their effectiveness and reliability have been demonstrated in the field. Three density separation processes are potentially applicable to the proposed action: clarification, flotation, and centrifugation. These processes are addressed in Sections B.1.2.1 through B.1.2.3.

TABLE B.1 Potential Technologies for Treatment of the Surface Waters at the Chemical Plant Area

Technology[a]	Potential Applicability[b]
Physical	
Equalization/detention	General
Density separation	
Clarification	General
Flotation	General
Centrifugation	General
Flocculation	General
Filtration	
Granular media	General
Tubular membrane	General
Rotary drum	Follow-on
Microscreening	General
Filter press	Follow-on
Dialysis (osmosis)	General
Ultrafiltration (reverse osmosis)	General
Electrolysis	Arsenic, manganese, other metals, cyanide, uranium, thorium, radium
Electrodialysis	Arsenic, manganese, other metals, selenium, nitrate, fluoride, uranium, thorium, radium
Adsorption	
Powdered activated carbon	Arsenic, organics
Granular activated carbon	Arsenic, organics, selenium, fluoride
Activated alumina	Arsenic, fluoride, selenium, uranium, radium
Stripping (air, steam)	Organics
Vapor recompression/distillation	General
Thermal destruction	
Incineration	Cyanide, organics, nitrate
Pyrolysis	Cyanide, organics, nitrate
Thermal oxidation	Cyanide, organics, nitrate
Freeze crystallization	General
Chemical	
Neutralization	General
Coagulation/precipitation	General

TABLE B.1 (Cont'd)

Technology[a]	Potential Applicability[b]
Chemical (Cont'd)	
Oxidation/reduction	
Ozonation	Cyanide, general
Chlorination	Cyanide, general
Wet air oxidation	Cyanide, general
Ion exchange	General
Chlorinolysis	Chlorocarbons
Dechlorination	Other
Solvent extraction	Organics
Stabilization/solidification	Follow-on
In-situ permeable treatment beds	General
In-situ injection	General
Biological[c]	
Stirred reactor	
Activated sludge	Nitrate, organics, radionuclides
Denitrification	Nitrate, organics, radionuclides
Surface impoundment	Nitrate, organics, radionuclides
Fixed-film fluidized bed	Nitrate, organics, radionuclides
Trickling filter	Nitrate, organics, radionuclides
Rotating biological disc	Nitrate, organics, radionuclides
Land treatment	Nitrate, organics, radionuclides

[a]Although many of these are combined physicochemical treatment technologies, they are listed here on the basis of their controlling element.

[b]"General" implies broad applicability, e.g., for removal of many of the contaminants or of suspended solids either present in the influent or generated during a primary treatment process for removal of dissolved contaminants. "Other" implies potential applicability as a secondary treatment process, e.g., to destroy contaminants that are not now present in the surface waters but could be generated during a primary treatment process. "Follow-on" implies potential applicability as a follow-on process, e.g., to dewater waste sludges generated by unit operations of the treatment system.

[c]Radionuclides may be partially removed by biological processes.

B.1.2.1 Clarification

Also referred to as sedimentation or gravity settling, clarification is typically carried out in an open tank or basin and involves the natural settling of suspended solids by gravity. Clarification is an effective first-stage treatment for large particles that settle quickly (i.e., in less than 2 hours) and is applicable to the proposed action.

B.1.2.2 Flotation

Flotation involves the bubbling of air through a waste solution, which causes small particles to rise to the surface with the air bubbles. This process is effective for the removal of finely divided suspended solids from a liquid waste stream and is typically carried out in an open tank or basin. As a support step for solids settling, flotation is potentially applicable to the proposed action.

B.1.2.3 Centrifugation

Centrifugation is based on density differences between solids or liquids and other liquids and is achieved by rapid rotation in an enclosed system. For small-scale processes, centrifugation is competitive with filtration, and its effectiveness and reliability have been demonstrated in the field. However, it is not effective for the removal of dissolved solids, which are of major concern for the waters impounded at the chemical plant area. Nor would centrifugation be appropriate as a follow-on process to the precipitation of those dissolved solids, i.e., following the formation of suspended solids, because it is neither effective nor competitive with other proven methods for solids removal from large volumes of relatively dilute solutions. Therefore, centrifugation is not considered applicable to the proposed action.

B.1.3 Flocculation

Flocculation involves the slow mixing of a waste solution, e.g., with mechanical or air agitation, to facilitate the aggregation of suspended solids for enhanced settling. This process is typically employed after chemical addition for coagulation or precipitation to improve settling efficiencies. Flocculation can be considered a physicochemical process when chemical flocculants are added to a waste solution to enhance the removal of suspended solids. The effectiveness and reliability of flocculation have been demonstrated in the field, and this conventional treatment process is potentially applicable to the proposed action.

B.1.4 Filtration

Filtration involves the removal of suspended solids from a liquid waste stream by using gravity, suction, or pressure to move the liquid through a filter. As the solution flows directly through the filter, contaminants are trapped on its upstream side. Filtration usually follows density separation or flocculation during conventional

wastewater treatment operations, i.e., after most of the solids have been removed from solution. The process is typically used to remove particles that are larger than 25 μm in diameter; in general, smaller particles must be agglomerated prior to filtration. As a broad category, filtration is effective, reliable, and commonly used in water and wastewater treatment operations. Therefore, as a step in the overall treatment system, filtration is applicable to the proposed action. Five filtration processes are potentially applicable to the proposed action: granular media filtration, tubular membrane filtration, rotary drum filtration, microscreening, and filter press filtration. These processes are addressed in Sections B.1.4.1 through B.1.4.5.

B.1.4.1 Granular Media Filtration

Granular media filtration is a conventional process that is appropriate for the treatment of a liquid waste stream. It involves the entrapment of suspended solids on a natural or artificial medium, such as sand or plastic, that is arranged in a column or basin through which solution flows by gravity or under pressure. The column or basin is equipped with an underdrain system and is backwashed when full to remove the trapped contaminants from the medium's surfaces. Granular media filtration is an energy-efficient method for removing suspended solids and is applicable to the proposed action.

B.1.4.2 Tubular Membrane Filtration

Tubular membrane filtration involves the separation of suspended solids from solution by applying pressure to a membrane system. The synthetic membranes used in this filtration process typically have openings of about 0.1 μm, and the system operates at pressures of 275 to 345 kPa (40 to 50 psi). Tubular membrane filtration is generally effective at suspended solids concentrations greater than would be present in potential influents to the proposed treatment plant. Thus, although it would be inappropriate as a first-stage treatment step, membrane filtration could be used as a follow-on process to remove the suspended solids formed by a first-stage coagulation/precipitation step. Because this process is more energy-intensive than granular media filtration, with higher capital and operating costs for the same level of effectiveness, granular media filtration is considered more appropriate and tubular membrane filtration is not considered further for the proposed action.

B.1.4.3 Rotary Drum Filtration

In the rotary drum filtration process, a vacuum is applied from within a rotating drum that is partially submerged in a waste solution or slurry. Suspended solids are trapped on and subsequently scraped off the drum's outer surface membrane. Vacuum filtration is considerably more energy-intensive than granular media filtration. In addition, this process is not typically effective for the treatment of dilute solutions. Although vacuum filtration can be used as a follow-on process for sludge treatment, it is not generally as effective as other dewatering methods such as filter press filtration (see

Section B.1.4.5). Thus, based on concerns regarding implementation, rotary drum filtration is not considered applicable to the proposed action.

B.1.4.4 Microscreening

Microscreening is a filtration process that traps solids on a metallic surface screen with openings typically ranging from 20 to 40 μm in diameter. Microscreening is a tertiary water treatment process that could be considered potentially applicable to the proposed action. However, field experience has identified low removal efficiencies for the microscreening of chemically treated wastewater. This low efficiency can result from rapid shearing and penetration of the microscreen due to the generally low strength of chemical floc (Culp et al. 1978). Based on implementation concerns, microscreening is not considered applicable to the proposed action.

B.1.4.5 Filter Press Filtration

In filter press filtration, a series of plates and sheets are pressed together to force the liquid out of a solution or slurry while trapping the contaminant solids on a fabric filter that covers the sheets. A filter press is typically used to dewater sludges, and this method is not generally effective for removing suspended solids from relatively dilute aqueous streams. Therefore, this treatment technology is not considered applicable to the initial treatment of contaminated water but is applicable as a follow-on process to reduce the volume of sludges generated by the primary treatment processes (e.g., precipitation and denitrification).

B.1.5 Dialysis (Osmosis)

Dialysis involves the osmotic separation of dissolved contaminants from a liquid waste stream. This separation is achieved by the movement of a solution through a semi-permeable membrane into a more concentrated solution. Dialysis can be effective for the treatment of liquid waste streams having high concentrations of dissolved solids with low molecular weight, such as cyanides. However, because it can be both costly and ineffective for the treatment of fairly dilute waste streams, dialysis is not considered applicable to the proposed action.

B.1.6 Reverse Osmosis/Ultrafiltration

Reverse osmosis achieves the membrane separation of dissolved solids from a waste solution by a process that is the reverse of osmosis, such that the concentration of dissolved solids in the product is increased instead of decreased. In reverse osmosis, mechanical pumping at 1.4 to 2.8 MPa (200 to 400 psi) is used to exert pressure on the wastewater side of a semipermeable membrane; this reverses the natural osmotic flow of the water so that dissolved solids remain behind. Most inorganics, e.g., heavy metals, can be removed from aqueous waste streams by reverse osmosis, as can some organics and very fine particulates. Ultrafiltration is similar to reverse osmosis in that it is a

pressure-driven, membrane-separation technology. The differences are that ultrafiltration systems operate at lower pressures than reverse osmosis units, remove only high molecular weight compounds, and are not used for removing ionic compounds (MacNeil 1988).

Although typical removal efficiencies for uranium by this process approximate 70%, some data indicate that 90% removal efficiencies can be achieved (Reid et al. 1985). A recent study by the Charlotte Harbor (Florida) Water Association indicated 99% removal of uranium from groundwater by this method (Sorg 1988). The trivalent arsenic ion can also be removed from aqueous solutions by reverse osmosis, as can nickel, nitrate, and sulfate. Although silver and zinc can also be removed by this process, related experience is limited. Other, more proven technologies exist for treating all of these contaminants. The effectiveness of reverse osmosis for treating large volumes of fairly dilute waste streams has not been widely demonstrated in the field. In addition, the process requires pretreatment to remove suspended solids, iron, and manganese in order to limit membrane fouling (Morrison-Knudsen Engineers 1988a), and both capital and operating costs are quite high. For example, the cost for radionuclide removal by this method is estimated to be more than twice that for removal by other effective processes such as conventional coagulation/precipitation and filtration (Reid et al. 1985). Therefore, reverse osmosis and ultrafiltration are not considered applicable to the proposed action.

B.1.7 Electrolysis

Electrolysis involves the charge separation of dissolved solids from a liquid waste stream using an electrical current. This physicochemical process can be used to remove ions such as dissolved heavy metals from solution. Carbon (graphite)-steel electrodes have been used to treat cyanide wastes at concentrations higher than 1,000 mg/L (Morrison-Knudsen Engineers 1988a). However, cyanide levels in the raffinate pit waters are orders of magnitude less than levels amenable to electrochemical oxidation. In addition, this process is quite energy-intensive and is not generally effective for the treatment of large volumes of relatively dilute waste streams. Therefore, electrolysis is not considered applicable to the proposed action.

B.1.8 Electrodialysis

Electrodialysis is a physicochemical process in which an electrical current is used to enhance ionic movement across a membrane; dissolved solids can be separated from a liquid waste stream on the basis of differential rates of diffusion through this membrane. Electrodialysis can be used to remove such ions as arsenic and uranium from aqueous solutions. Removal efficiencies for the pentavalent arsenic ion approach 65% whereas those for uranium are typically 70%. However, the effectiveness of electrodialysis has not been demonstrated on waste streams similar to those at the chemical plant area. Nonionic contaminants cannot be concentrated and the permeate is not as pure in dissolved ion concentrations as that produced by reverse osmosis (MacNeil 1988). In addition, because this process is expensive, it is not competitive with other

potentially applicable water treatment technologies that can achieve similar removal efficiencies. Therefore, electrodialysis is not considered applicable to the proposed action.

B.1.9 Adsorption

Adsorption is a physicochemical process that involves the removal of dissolved solids from a liquid waste stream by adsorption onto a treatment medium, e.g., activated carbon or activated alumina. Adsorption is commonly used as a polishing step to remove refractory organics (i.e., those that resist biological degradation) from treated waters and wastewaters prior to discharge. The suspended solids content of the influent to an adsorption process step must typically be restricted to less than 50 mg/L, or system clogging and treatment failure could result. For treatment of the surface waters at the chemical plant area, this condition could be met by implementing solids-removal processes, such as clarification and/or filtration, prior to the adsorption step in the overall treatment system. Two general adsorption processes are potentially applicable to the proposed action: activated carbon adsorption and activated alumina adsorption.

The most common type of adsorption in water and wastewater treatment operations is activated carbon adsorption. Thermal activation creates sites on carbon particles for the physical and chemical adsorption of solution contaminants. The number of adsorption sites on activated carbon is significant compared to that on other adsorbents, based on a considerable surface-to-mass ratio that can average 1,000 m^2/g. There are two types of activated carbon: granular and powdered. Granular activated carbon (GAC) adsorption is usually carried out in a column or tank whereas powdered activated carbon (PAC) is usually added to a waste solution in a process reactor. Because GAC can typically be regenerated whereas PAC cannot, the former is most commonly used in treatment systems. The effectiveness and reliability of carbon adsorption for the removal of dilute organics and some inorganics from aqueous waste streams have been demonstrated in the field.

Certain dissolved contaminants can also be removed from solution by adsorption onto activated alumina. The principle of activated alumina adsorption is similar to that for activated carbon adsorption, and the process typically involves passing a waste stream through pressure tanks filled with granular aluminum oxide (Al_2O_3).

The potential applicability of adsorption on PAC, GAC, and activated alumina to the proposed action is addressed in Sections B.1.9.1 through B.1.9.3.

B.1.9.1 Powdered Activated Carbon

Tests of PAC treatment for the removal of two organics, carbon tetrachloride and 1,1,1-trichloroethane, from river water indicated removal efficiencies of only 25% and 45 to 60%, respectively (Environmental Science and Engineering 1986). Thus, the removal efficiency for organics such as 2,4-DNT by this process is expected to be poor. In addition, the effectiveness of PAC for adsorption of organics has not been

demonstrated in the field and, based on the kinetics of PAC adsorption for high-efficiency removals, the amount of PAC required for effective organics removal would be excessive (Morrison-Knudsen Engineers 1988a). Therefore, PAC adsorption is not considered applicable to the proposed action.

B.1.9.2 Granular Activated Carbon

Based on the physical nature of the GAC treatment operation, i.e., packed columns or beds, the kinetics limitation for PAC does not apply to GAC adsorption. In addition, GAC has been used to remove a number of organics from solution and implementation of the method is straightforward. For example, carbon adsorption is assigned a "high" rating for 2,4-DNT removal in EPA's *Treatability Manual* (EPA 1982), and related isotherm data identify a good adsorption capacity (Dobbs and Cohen 1980; Patterson 1985). The process constraint for influent suspended solids of 50 to 100 mg/L could be met by implementing GAC as a follow-on step to solids-separation processes for the waters impounded at the chemical plant area (Morrison-Knudsen Engineers 1988a). Because this constraint is similar to that for filtration, GAC can also provide a general filtration capability without sacrificing effluent quality; this dual-purpose use of GAC has been demonstrated in the field. Therefore, GAC adsorption is applicable to the removal of organics (e.g., 2,4-DNT) for the proposed action.

Although activated carbon has been shown to adsorb arsenic, experimental data indicate that the pH must be reduced to 3 or 4 to achieve this removal and that, even at optimum pH, the capacity of activated carbon for arsenic removal is only about 8% of that for removal by activated alumina (Gupta and Chen 1978). In addition, because the cost per pound of activated carbon is similar to that of activated alumina, carbon adsorption is not a competitive method for reducing arsenic levels (Morrison-Knudsen Engineers 1988a). Therefore, GAC adsorption is not considered applicable to arsenic removal for the proposed action.

Adsorption on GAC has also been shown to reduce solution levels of selenium and chromium, but the percent removal is typically low; for example, the removal efficiency for selenium adsorption on GAC can be 4 to 37% (Patterson 1985). The use of activated carbon for metals removal would be considered only as a tertiary or polishing step after solution levels have been substantially reduced by other processes. Activated carbon can also be used as a polishing step to remove chlorination residuals, e.g., following chlorine oxidation. In summary, GAC adsorption is applicable to the proposed action.

B.1.9.3 Activated Alumina

Adsorption on activated alumina can remove arsenic, uranium, radium, selenium, and fluoride from solution, and implementation of the process is fairly straightforward. Although typical arsenic removal efficiencies are estimated at 75%, the results of pilot-scale studies indicate that a reduction of 90% (from 0.1 to 0.01 mg/L) can be achieved with fairly constant efficiency at a treatment capacity of 94,000 L/m^3 (7,000 gal/ft^3) over a pH range of 3 to 7 (Jacobs Engineering Group 1987). The activated alumina can be regenerated with sodium hydroxide followed by an acid rinse to readjust the pH (Bellak

1971). In another study, removal efficiencies of 100% were achieved for over 8,500 bed volumes at pH 5.5 of an influent arsenic concentration of 0.09 mg/L, and reduction to 0.05 mg/L was still possible after over 15,500 bed volumes (Hathaway and Rubel 1987). Thus, activated alumina adsorption is applicable to arsenic removal for the proposed action.

Laboratory studies have shown that activated alumina adsorption can achieve removal efficiencies of 90% for uranium after 2,500 bed volumes, with exhaustion at 5,000 bed volumes (Reid et al. 1985). Hence, this process is potentially applicable to uranium removal for the proposed action. Laboratory studies have also shown that activated alumina adsorption can achieve removal efficiencies of 70% for radium; approximately 3,350 bed volumes can be treated prior to radium-226 breakthrough at 3.25 pCi/L (corresponding to 5 pCi/L radium-226 and radium-228, combined). This process has been demonstrated in field studies (Clifford et al. 1988) and is potentially applicable to radium removal for the proposed action.

Activated alumina has been shown to remove selenium with very high efficiency in laboratory experiments (Sorg and Logsdon 1978). Thus, activated alumina adsorption is potentially applicable to selenium removal for the proposed action.

Contact beds and columns of activated alumina have been used for many years in municipal water treatment plants to remove fluoride. Industrial pilot-scale plants have demonstrated the reduction of 20 to 40 mg/L fluoride to 2 to 3 mg/L using activated alumina (Patterson 1985). Thus, activated alumina adsorption is applicable to fluoride removal for the proposed action.

B.1.10 Stripping

Stripping can remove dissolved contaminants, primarily volatile compounds, from a liquid waste stream using air or steam. Air stripping (using aeration towers, spray aeration, diffused air aeration, or air lift pumps) is typically used to treat ammonia and certain volatile organics such as acetone, carbon tetrachloride, benzene, and toluene. The removal is achieved by transferring the targeted compound from solution to air, whereupon treatment of the air generally becomes necessary. Because contaminants in the surface waters impounded at the chemical plant area are not generally amenable to air stripping, this process is not considered applicable to the proposed action.

Steam stripping is essentially a steam distillation process in which the targeted contaminants, e.g., volatile organics, become the distillate. The process can be used to remove phenols, chlorocarbons, ammonia, and hydrogen sulfide from solution. However, its competitiveness, effectiveness, and reliability have not been demonstrated for the contaminant removals required for the surface waters at the chemical plant area. Therefore, steam stripping is not considered applicable to the proposed action.

B.1.11 Vapor Recompression/Distillation

Distillation by vapor recompression at low temperatures (less than 60°C) is applicable to the treatment of a wide range of contaminants. The low temperature of this process reduces scaling, corrosion, and total costs relative to other distillation processes. Typically applied to the treatment of concentrated influent streams, such as seawater or cooling tower blowdown water, vapor recompression/distillation embodies a total treatment approach that has been demonstrated to be both reliable and effective in nonhazardous waste stream applications. The process involves purification of a waste stream by vaporizing and recondensing its aqueous fraction in a partial vacuum, leaving behind a concentrated residue. The quality of effluent for this process can approach that of distilled water in some applications. Use of this process to treat selenium-contaminated wastewater produced removal efficiencies of greater than 98% and a total effluent dissolved solids content of 10 mg/L (Awerbuck et al. 1986), and it is estimated that vapor recompression/distillation may be able to achieve an effluent uranium concentration of 25 pCi/L (Morrison-Knudsen Engineers 1987). Removal efficiencies of 90 to 98% have been demonstrated for nitrates (Patterson 1985). Vapor recompression/distillation can also be used to remove a variety of other contaminants, including chromium, copper, nickel, sulfate, chloride, and cyanide.

In addition to producing a high-quality effluent, the major advantages of the vapor recompression/distillation process are its ease of start-up, its relatively low work force requirements, and its general insensitivity to variations in influent components and concentrations. This could be important for treatment of the surface waters impounded at the chemical plant area because the nature and level of contaminants in the influents to the proposed treatment system are expected to vary over time, i.e., over a longer period than could be controlled by an equalization basin. Potential disadvantages include high operating costs (primarily for the compressor motor) and the generation of a substantial volume of process waste. However, the volume of this waste concentrate can be reduced by including mechanical drying as a follow-on step. Based on the multi-component treatment aspect of this technology and its ability to treat widely variable waste streams, vapor recompression/distillation is applicable to the proposed action.

B.1.12 Thermal Destruction

Thermal destruction is typically used to destroy combustible wastes such as organics in a solid matrix. Although its effectiveness and reliability as a broad category have been demonstrated in the field, thermal destruction is not commonly used for the treatment of aqueous waste streams such as the surface waters at the chemical plant area. Three types of thermal destruction processes are potentially applicable to the proposed action: incineration, pyrolysis, and thermal oxidation. These processes are addressed in Sections B.1.12.1 through B.1.12.3.

B.1.12.1 Incineration

Incineration is typically used to treat organics such as PCBs, combustible solvents, and gases. Four types of incineration processes are (1) fluidized bed -- in which

the waste is introduced into an agitated bed of hot, inert granular material, (2) multiple hearth -- in which the waste falls through heated, tiered layers, (3) rotary kiln -- in which the waste tumbles in a slowly rotating, angled, heated cylinder, and (4) liquid injection -- in which a liquid waste stream is injected into a hot combustion chamber for atomization. Associated operating temperatures typically range from 750 to 980°C for the first two processes and from 650 to 1,650°C for the latter two.

Only liquid injection would be appropriate for the treatment of contaminated surface waters at the chemical plant area because the other three thermal destruction processes are generally limited to combustible solids, solvents (organic), or gases. A second constraint is that incineration, including liquid injection, is typically limited to the treatment of organic solutions because the removal efficiency of metals is low. Because other, much less costly and more easily implemented technologies are available to remove organic contaminants (such as 2,4-DNT) from a waste stream, incineration processes -- including liquid injection -- are not considered applicable to the proposed action.

B.1.12.2 Pyrolysis

Pyrolysis is a two-stage thermal conversion process that can be used to remove organic and inorganic material from a waste matrix. In the first stage, contaminants are "roasted" (rather than combusted) in an oxygen-deficient atmosphere at temperatures of 480 to 900°C; a second-stage fume incineration is then initiated at temperatures of 1,000 to 1,500°C to destroy the volatile compounds generated during the first stage. Pyrolysis is both energy-intensive and costly. Because the waters impounded at the chemical plant area comprise a dilute, aqueous solution, pyrolysis is not competitive with other treatment processes that can achieve the same removal efficiencies. Therefore, pyrolysis is not considered applicable to the proposed action.

B.1.12.3 Thermal Oxidation

Thermal oxidation is a physicochemical process that is used to remove chlorinated organics from liquid waste streams. Because the surface waters at the chemical plant area do not require this treatment to remove such contaminants, thermal oxidation is not considered applicable to the proposed action.

B.1.13 Freeze Crystallization

Freeze crystallization separates contaminants from a liquid waste stream by physically transforming them into crystalline products through exposure to low temperatures. Because this process is very energy-intensive and costly (its reported total cost is more than double that for membrane separation and distillation processes [Snider 1987]), it is not competitive with other technologies for the treatment of surface waters impounded at the chemical plant area. Therefore, freeze crystallization is not considered applicable to the proposed action.

B.2 CHEMICAL TREATMENT TECHNOLOGIES

B.2.1 Neutralization

Neutralization involves adding an acidic or caustic solution to a waste stream in order to change its pH. Precipitates that form as a result of this process may require subsequent treatment. The contaminated surface waters at the chemical plant area are approximately neutral in pH; therefore, neutralization is not a primary treatment requirement. However, neutralization may be included as a step in an overall treatment system that depends on pH adjustment to meet its objectives, e.g., as part of a chemical addition step for precipitation or oxidation. As used for pH adjustment, neutralization is applicable to the proposed action.

B.2.2 Coagulation/Precipitation

Coagulation/precipitation is a physicochemical process used to reduce the solubility of dissolved contaminants, thereby creating insoluble compounds that can subsequently be removed, e.g., by a density separation or filtration process. Coagulation/precipitation generally relies on chemical addition to form suspended solids from dissolved solids. The formation of insoluble species can also result from changing the temperature of a waste solution, but because this variation is energy-intensive and costly, it is not considered applicable to the proposed action. Therefore, consideration of coagulation/precipitation in this discussion is limited to chemical addition.

Coagulation/precipitation is usually combined with a density separation process, e.g., clarification or flotation, or with filtration to enhance removal of the formed solids. For the proposed action, the addition of chemical coagulants and lime for solids formation are considered to be separate processes. Optimum pH values are generally lower for coagulation than for lime treatment, which is typically effective at a pH greater than 8. Lime treatment, also referred to as lime softening, is commonly used in conventional water treatment systems. The process involves adding calcium to a solution as the hydroxide [$Ca(OH)_2$] or oxide (CaO) to remove dissolved solids by precipitation and subsequent settling. Coagulation involves the addition of a chemical coagulant such as ferric chloride ($FeCl_3$), ferrous sulfate [$Fe(SO)_4$], or alum [$Al_2(SO_4)_3$] to a colloidal suspension in order to agglomerate dispersed solids into a larger mass for improved settling.

Coprecipitation can also be considered an element of precipitation because it can involve (1) the flushing of contaminants out of solution with a settling mass, i.e., through mechanical enclosure by the precipitate or (2) the adsorption of ions on the surface of a formed precipitate. Thus, although not specifically intended for organics removal, this process is potentially applicable to the removal of organics (e.g., 2,4-DNT) and other contaminants for the proposed action.

Arsenic can be removed from solution by using lime treatment in conjunction with metal coprecipitation. In combination with other processes, such as flocculation and clarification, field application of lime treatment has attained arsenic removal

efficiencies of 95% at a pH of 6 to 6.5 (EPA 1985). Arsenic can also be removed by coprecipitation with the iron oxyhydroxides (FeOOHs) formed following the addition of a coagulant, e.g., ferric chloride, to a waste solution (Merrill et al. 1986). The coprecipitation process could be used to limit the excessive pH (12) and associated lime dose and sludge volume that would otherwise be necessary to form arsenic solids using lime treatment alone (Patterson 1985). The oxidation state of arsenic is sometimes important to the sequence and type of chemical addition steps used in the coagulation/precipitation process. Coprecipitation with alum has achieved 90 to 95% removal efficiencies for the oxidized form of this ion, i.e., arsenate (Patterson 1985). Arsenic precipitation with sulfides at pH 6 to 7 has also been reported (Hathaway and Rubel 1987). Therefore, coagulation/precipitation is applicable to arsenic removal for the proposed action.

Manganese can also be removed from solution by conventional lime treatment. Because the waters impounded at the chemical plant area are primarily aerobic, manganese probably exists in its oxidized form. Thus, initial removal could be easily achieved by clarification and/or filtration, without additional treatment steps. However, the reduced form of the element could also occur (e.g., near the bottom of the raffinate pits). This form could require chemical addition for precipitation, and lime treatment can be effective at pH levels of 9 to 9.5 (Morrison-Knudsen Engineers 1988a). Therefore, coagulation/precipitation is applicable to manganese removal for the proposed action.

Uranium removal can also be achieved by conventional lime treatment, and experimental data have identified 85 to 90% removal efficiencies (Reid et al. 1985). To achieve this reduction, the pH is elevated to between 10.6 and 11.5, and removal is enhanced by the presence of magnesium (Schlicher and Ghosh 1985). The use of lime treatment for uranium removal has been demonstrated in the field, with typical removal efficiencies reported to exceed 80% (Dyksen and Hess 1986). Uranium can also be removed from solution by precipitation with alum or iron coagulants. A field application of ferrous sulfate addition for coagulation of uranium at an influent concentration of 24 μg/L resulted in 89% removal efficiency at pH 6 (Reid et al. 1985). Because the coagulation process is sensitive to pH, optimization of coagulant types, doses, and solution pH would be required.

During recent field experience with waste streams similar to those at the chemical plant area, precipitation processes for uranium were coupled with those for arsenic. The system consisted of acid treatment at pH 4, ferrous sulfate coagulation with lime adjustment to pH 6, and lime treatment at pH 9.5. This sequence of reactions resulted in the precipitation of uranium as its hydroxide and the coprecipitation of arsenic with ferric hydroxide (Morrison-Knudsen Engineers 1988a). Nearly complete removal of uranium by this process was reported for an influent concentration of 6,400 μg/L (Reid et al. 1985). Based on these results, coagulation/precipitation is applicable to uranium removal for the proposed action.

Antimony, beryllium, chromium, copper, iron, lead, nickel, and fluoride are also amenable to removal by chemical precipitation, coagulation, and/or coprecipitation processes. Precipitation as the calcium salt is the most widely used method for removing fluoride from industrial wastewaters and can produce effluent levels of 12 to 30 mg/L. Alum precipitation and alumina adsorption may be used as polishing steps to achieve even

lower fluoride levels (Paulson 1977). Hence, coagulation/precipitation is applicable to the removal of a variety of ions for the proposed action.

B.2.3 Oxidation/Reduction

Oxidation/reduction is a conventional process used to remove organics and some inorganics from a liquid waste stream. The process involves changing the oxidation state of contaminants to facilitate precipitation and clarification, and it is most effective at low solution concentrations. The general effectiveness and reliability of this process have been demonstrated in the field.

Limited experience with uranium removal by reduction involves lowering the pH with chemical addition to reduce uranium from its hexavalent to its tetravalent form, and then raising the pH with chemical addition to precipitate the uranium as an insoluble oxide or hydroxide (Morrison-Knudsen Engineers 1988a). Because chemical addition/precipitation is the controlling element of this removal and no specific reducing agent is involved, oxidation is considered with coagulation/precipitation (Section B.2.2).

Although the oxidation state of arsenic can be a factor in its removal, the use of a specific chemical agent is not required for the effective removal of this contaminant (see Section B.2.2). Oxidation of selenite to selenate followed by anion exchange has been shown to be an efficient method of selenium removal from contaminated wastewaters, with a removal efficiency of greater than 99% (Patterson 1985). However, as for arsenic, the use of a specific chemical agent is not required for the effective removal of this contaminant.

Chemical agents typically used to oxidize organics, cyanide, and some dissolved metals include ozone (O_3), chlorine (Cl_2), hydrogen peroxide (H_2O_2), and sodium hypochlorite (NaOCl). Although manganese and other metals, such as arsenic, may be oxidizable by these agents, oxidation is not typically competitive with other treatment processes for their removal. Three oxidation processes -- ozonation, chlorination, and wet air oxidation -- are potentially applicable to the proposed action, e.g., to remove cyanide and organics. These processes are addressed in Sections B.2.3.1 through B.2.3.3.

B.2.3.1 Ozonation

Ozonation can be used to treat refractory organics and cyanides and is most effective for the treatment of dilute solutions, e.g., those with less than 1% oxidizable materials. The reliability of ozonation has not been widely demonstrated, but its effectiveness can be enhanced by combination with a developmental physical treatment process, i.e., ultraviolet photolysis. Because the applicability of ozonation to the removal of organic compounds such as 2,4-DNT has not been demonstrated in the field and because such organics can be treated more effectively by other processes, ozonation is not considered applicable to organics removal for the proposed action. Manganese can be oxidized by ozonation, but this process is not effective when lime treatment is included in the overall treatment process (Morrison-Knudsen Engineers 1988a). Based on

this limitation and the fact that the process is not competitive with other, potentially more effective processes, ozonation is not considered applicable to manganese removal for the proposed action. Ozone oxidation of cyanides has been employed with some success, but its use in full-scale applications is limited. In addition, because chlorination is the most common and cost-effective method for cyanide removal, ozonation is not considered applicable to the proposed action.

B.2.3.2 Chlorination

The oxidation of manganese by chlorine dioxide (chlorination) is a feasible treatment step for removing this metal from solution. However, the capital and operating expenses of this process, combined with the potential creation of a secondary treatment problem (related to chlorine residuals), make full-scale chlorination generally inapplicable to the proposed action. Alkaline chlorination is a conventional oxidation process that is typically used to remove cyanides from wastewater by oxidizing cyanide to the less toxic cyanate. If present, soluble iron must be removed from a waste stream prior to chlorination to prevent interference. Based on the presence of cyanide in the raffinate pits, low-dose alkaline chlorination is considered potentially applicable to the proposed action.

B.2.3.3 Wet Air Oxidation

Wet air oxidation is a physicochemical combustion process in which air is added to a liquid at high temperature and pressure. Wet air oxidation is typically used to treat oxidizable organics of 5 to 15% by weight in aqueous streams. Because this process is somewhat developmental and because the organics requiring treatment (e.g., 2,4-DNT) can be removed more effectively by other processes, wet air oxidation is not considered applicable to the proposed action.

B.2.4 Ion Exchange

Ion exchange is a physicochemical process used to separate dissolved ions (primarily inorganic) from solution by interchanging with ions on a natural or synthetic resin. The effectiveness and reliability of this process have been demonstrated in the field, and ion exchange can be highly effective for the removal of metallic ions from aqueous solutions. Resin beds for cation or anion exchange are usually regenerated with acidic or caustic solutions.

Arsenic can be removed from solution by either weak base or strong base anion-exchange resins at efficiencies of greater than 77% (Patterson 1985). Both arsenite and arsenate species can be removed by this process, and typical efficiencies range from 55 to 99% depending on the selected resin. However, a low exchange capacity typically results from resin loading by the sulfate ion (Morrison-Knudsen Engineers 1988a). Because there is a potential for sulfate interference during treatment of the surface waters impounded at the chemical plant area, ion exchange is not considered applicable as the primary process for arsenic removal under the proposed action.

Manganese can be removed from solution by cation-exchange resins. However, rapid resin exhaustion typically occurs when other divalent cations are present, such as calcium and magnesium. Based on the nature of the impounded surface waters, this limitation would likely increase operating time and cost, and the process would not be competitive with other treatment processes. Therefore, ion exchange is not considered applicable as the primary process for manganese removal under the proposed action.

Chromium, copper, lead, nickel, selenium, and zinc ions can also be removed by ion exchange. The efficiency of this process for chromium removal is highly dependent on pH. At pH below 4, chromic acid can attack the exchange resin; at pH above 6, early leakage can occur (Patterson 1985). The partial removal of metals such as lead and zinc by ion exchange can constitute a secondary level of treatment or polishing. In summary, ion exchange may be applicable to the proposed action as a support step for the removal of a variety of metals.

Organics can be removed from solution using an organic ion-exchange resin. However, this process is not generally competitive with other, more effective processes (e.g., GAC adsorption) for organics removal. Therefore, ion exchange is not considered applicable to organics removal for the proposed action.

Uranium removal by ion exchange is a feasible technology that has been implemented in the field. Laboratory and field trials for removing uranium from drinking water supplies have identified a high adsorption capacity and resin selectivity for this radionuclide. Typical uranium removal efficiencies of 70% have been reported for cation-exchange systems, and efficiencies of 95% have been identified for anion-exchange systems (Reid et al. 1985). Resins can be regenerated by sodium chloride or sodium hydroxide solutions, and the spent regenerant typically requires subsequent treatment, e.g., neutralization and/or solidification. In summary, ion exchange is applicable to uranium removal for the proposed action.

Chloride, fluoride, nitrate, and sulfate can all be removed by ion exchange; the removal efficiency for nitrate can be 75 to 95% (Patterson 1985). Therefore, ion exchange is considered applicable to the removal of various anions for the proposed action.

B.2.5 Chlorinolysis

Chlorinolysis is a physicochemical process used to remove chlorocarbons from solution by pyrolysis in a chlorine-rich environment. Because the impounded waters do not require treatment for such contaminants, chlorinolysis is not considered applicable to the proposed action.

B.2.6 Dechlorination

Chemical dechlorination can be used to strip chlorine ions from stable central molecules of PCBs or pesticides at influent concentrations greater than 50 mg/L. During this process, chemical reagents selectively attack the carbon-chlorine bond with such

effectiveness that removal efficiencies of 90% can be achieved (Morrison-Knudsen Engineers 1988a). The most widely applied technique for PCB dechlorination uses a naphthalene-based metallic sodium compound as the stripping agent (California Department of Health Services 1986); other techniques replace the naphthalene reagent with proprietary compounds. Because elevated concentrations of PCBs have not been identified in the surface waters at the chemical plant area, PCB dechlorination is not considered applicable to the proposed action.

Dechlorination can also be implemented as a support process for the treatment of chlorine residuals to remove contaminants that are generated during a chlorination treatment step, e.g., during the disinfection of drinking water supplies. However, full-scale chlorination of the waters impounded at the chemical plant area, with the resultant production of considerable residuals, is not within the scope of the proposed action. If low doses of chlorine were used to support a focused treatment process associated with the proposed action, e.g., for cyanide oxidation, the levels of residuals resulting from this step could be removed by activated carbon adsorption (a process that has already been identified as applicable to the proposed action). Therefore, dechlorination is not considered applicable to the proposed action.

B.2.7 Solvent Extraction

Solvent extraction involves the use of a solvent to separate dissolved solids or liquid organics from a waste matrix. Solvent extraction of liquid wastes can create secondary problems, e.g., problems related to the generation of a new organic waste stream. Based on this limitation and on the ineffectiveness of this technology compared with other processes for the treatment of organics, solvent extraction is not considered applicable to the proposed action.

B.2.8 Stabilization/Solidification

Stabilization/solidification is a physicochemical process used to reduce the mobility of waste components by binding them in a solid matrix. Cementation (including pozzolanic processes) is a conventional technology used to treat soils, waste slurries, and dewatered sludges; polymer and thermoplastic binding are two developmental technologies for such stabilization. None of these variations is feasible for the treatment of dilute liquid streams such as the surface waters at the chemical plant area, so stabilization/solidification is not considered applicable to the treatment needs of the proposed action. (However, this process could be considered applicable as an eventual follow-on process for the management of wastes generated by the treatment plant.)

B.2.9 In-Situ Permeable Treatment Bed

Implementation of an in-situ permeable treatment bed involves trenching around an area of contamination and filling the trench with a reactive, permeable medium. Under this developmental process, chemical reactions occur beneath the ground surface to render the targeted contaminants in a leachate either insoluble or nonhazardous. For

example, if leachate from the surface water impoundments reached the reactive medium, treatment would be expected to occur in situ to mitigate the potential hazards associated with contamination in the water. However, the effectiveness and reliability of this technology have not been demonstrated in the field and would be difficult to verify. In addition, this process could be difficult to implement over the extensive affected area, and it is not competitive with other, proven treatment technologies. Therefore, the in-situ permeable treatment bed is not considered applicable to the proposed action.

B.2.10 In-Situ Injection

In-situ injection is a developmental technology that involves the injection of chemical reagents into the ground beneath a contaminated area to neutralize, precipitate, or destroy the leachate constituents of concern. Based on limitations similar to those identified for in-situ permeable treatment beds in terms of effectiveness, reliability, feasibility, and noncompetitiveness with proven technologies (see Section B.2.9), in-situ chemical injection is not considered applicable to the proposed action.

B.3 BIOLOGICAL TREATMENT TECHNOLOGIES

Biological treatment can be used to treat nitrates and organics but is not generally effective for the removal of metals from solution. In fact, the applicability of biological treatment is constrained by the presence of certain contaminants, including metals, that may be toxic to bacteria. Reaction poisoning by trace levels of heavy metals is a major concern for wastewater treatment with biological processes such as denitrification (Francis and Hancher 1981). Hence, biological treatment of the surface waters impounded at the chemical plant area would require significant pretreatment for metals removal. In addition, variations in temperature, pH, and the types and levels of contaminants in the influent frequently cause system upsets, which can result in a significant lag time for regrowth of the microbial population. Startup and operation of biological treatment systems can be difficult, due to system sensitivity to a variety of parameters; system restart can take two or more weeks. These difficulties significantly impact the applicability of biological treatment to the proposed action because considerable influent variability is expected. Contaminant-specific applicability is addressed as follows.

A recent study has demonstrated that the microorganism *Anthrobacter* may be used to remove manganese and radium from uranium mill effluents (Mathur and Dwivedy 1988). This study indicated the possibility of biological treatment for these two contaminants on a small-scale application, but effective removal has not been proven in field-scale experiments.

Although biological treatment is commonly used to remove organics from solution, nitro-substituted organic compounds have been shown to resist biological degradation (EPA 1985). In addition, biological treatment of compounds such as 2,4-DNT would cost approximately 85% more than an activated carbon system, which is capable of high rates of organics removal (EPA 1973; California Department of Health Services

1986). Furthermore, although there are several field applications of biodegradation at contaminated sites (EPA 1985), most have addressed the stabilization of organic spills in soil, and none of the treated wastes were similar to the waters impounded at the chemical plant area (Morrison-Knudsen Engineers 1988a).

Biological treatment is not broadly applicable to most of the contaminants associated with the surface waters impounded at the chemical plant area, but it is potentially applicable for the removal of nitrates (and possibly some organics), e.g., following initial contaminant removal in a physicochemical system. Biological denitrification is a biochemical process by which bacteria convert nitrate to gaseous nitrogen under anoxic conditions (i.e., conditions under which the biochemical pathways are modified aerobic processes rather than strictly anaerobic processes). A number of heterotrophic microorganisms can be used to denitrify a waste stream, but methanol addition -- which can be costly -- is typically required to provide a supplemental carbon source for microbial growth. The effectiveness of biological denitrification for treating wastewaters containing high levels of nitrates, as do the raffinate pit waters, can range from 70 to 95% (Patterson 1985). The efficiency of denitrification can be optimized by maintaining the system pH between about 6.5 and 7.5. The rate of denitrification drops significantly at cold temperatures, with corresponding treatment delays and deteriorating effluent quality.

The two basic types of biological denitrification systems are (1) suspended growth, in which the microorganisms are maintained in a liquid suspension; and (2) attached growth, in which the microorganisms are attached to an inert medium such as sand, rock, or plastic. Suspended-growth systems include the stirred reactor and surface impoundment processes. Attached-growth systems include the fluidized bed reactor, trickling filter, rotating biological disc, and direct land treatment processes. The potential applicability of these systems to the proposed action is discussed in Sections B.3.1 through B.3.6.

B.3.1 Stirred Reactor

A biological stirred reactor system can be used to reduce levels of organics and other contaminants, such as nitrates, in waste streams. The continuous-flow stirred tank reactor and the plug-flow reactor (with agitation) represent two types of stirred reactor systems. The purpose of system agitation for biological treatment is aeration and/or enhanced microbial-wastewater contact, depending on the contaminant(s) targeted for removal. Two biological stirred-reactor treatment systems are potentially applicable to the proposed action: activated sludge and denitrification. These processes are addressed in Sections B.3.1.1 and B.3.1.2.

B.3.1.1 Activated Sludge

Activated sludge treatment is the most common stirred-reactor biological process for wastewater applications. In this process, the wastewater is directed into a continuous-flow stirred tank reactor that is agitated to maintain a suspended system and enhance oxygen transfer. The primary purpose of this aerobic process is to remove

organics from a liquid waste stream. However, equally effective and less costly systems are available for treating the organics that may be expected from surface waters impounded at the chemical plant area. In addition, the activated sludge process is not effective for nitrate removal, and it is therefore not considered applicable to the proposed action.

B.3.1.2 Denitrification

Denitrification can be achieved in a stirred reactor, e.g., a plug flow reactor with submerged paddles. Reactors can be covered to reduce air-liquid contact. A follow-on clarification step is typically required for biomass recycle, and the addition of an ion exchange step can increase final effluent quality. Denitrification using stirred reactors would be more costly than other biological denitrification systems that are equally effective (e.g., the fixed-film fluidized bed reactor). Therefore, the stirred reactor process is not considered applicable to the proposed action.

B.3.2 Surface Impoundment

A surface impoundment for biological treatment can consist of a waste lagoon or a stabilization pond. A lagoon can be either agitated by mechanical mixers for facultative (aerobic-anaerobic) treatment of organics or aerated by mixers or sprays for more extensive aerobic degradation. A stabilization pond can also be mechanically agitated, and slow mixing is typically used to minimize oxygen transfer and enhance anaerobic processes. Organic compounds in waste streams containing less than 1% solids can be degraded in stabilization ponds. The surface impoundment requires more space and time than a stirred-reactor system to achieve a similar level of treatment. As a variation, microbes and supplemental substrate could be added to the existing surface impoundments at the chemical plant area. However, due to (1) general constraints associated with biological treatment systems and (2) specific constraints relative to the general inefficiency of nitrate removal by this process (similar to those identified for the activated sludge process, see Section B.3.1.1), surface impoundments are not considered appropriate for treating waters at the chemical plant area. The necessary mixing could potentially enhance contaminant releases, and an impoundment-specific treatment approach would significantly hinder the ability to achieve the secondary scope of the proposed action (see Section 3.2), i.e., to support future cleanup activities that would generate additional influents at the chemical plant area. Hence, treatment in surface impoundments is not considered applicable to the proposed action.

B.3.3 Fixed-Film Fluidized Bed

A fixed-film fluidized bed reactor is an enclosed, attached-growth column system. In this system, wastewater typically flows upward (although downflow systems exist) through a hydraulically expanded bed of sand. The sand particles provide a large surface area for growth of the denitrifying microbial population. A plant-scale, two-column fluidized bed biodenitrification facility was successfully tested over a four-month

period at the Feed Materials Production Center at Fernald, Ohio (Bencar and Kneip 1988). With optimized methanol addition, 99% nitrate removal can be achieved by this process (Culp et al. 1978). Hence, this system is considered potentially applicable to the proposed action.

B.3.4 Trickling Filter

Trickling filters involve the aerobic, microbial degradation of organic compounds and the removal of suspended solids from solution, at typically less than 1% by weight, by trickling the waste stream over a bed of rocks or a synthetic medium. The filter medium provides a surface for the growth of a microbial slime and also acts to trap influent solids as well as those produced during the degradation process. Although trickling filters can be efficient for organics removal in terms of treatment time and treatable volume, they are generally inefficient for denitrification. Hence, this system is not considered applicable to the proposed action.

B.3.5 Rotating Biological Disc

The rotating biological disc constitutes an attached-growth process that is similar in principle to trickling filters (Section B.3.4) and rotary drum filtration (Section B.1.4.3). The rotating biological disc or contactor is commonly used in the treatment of domestic wastewater, and it is considered more reliable than other fixed-bed processes because (1) it can withstand hydraulic and organic surges more effectively and (2) its removal efficiencies are not constrained by plugging in the same manner as those of other biological processes such as trickling filters. However, the effectiveness and reliability of rotating biological discs have not been demonstrated for the treatment of contaminated solutions like the surface waters impounded at the chemical plant area, and the constraints identified for the activated sludge process (Section B.3.1.1) are true for this process as well. Hence, this process is not considered applicable to the proposed action.

B.3.6 Land Treatment

Direct land treatment can be used to treat waste streams with low metals content and involves their biological decomposition in soil rather than in water. Land treatment can consist of (1) spray irrigation -- in which the waste solution is sprayed, flooded, or allowed to flow by gravity over a vegetated land plot; (2) overland flow -- in which the solution is sprayed onto a relatively impervious vegetated incline; (3) infiltration-percolation -- in which large volumes of the solution are applied to the land and allowed to infiltrate the surface and percolate through the soil pores; or (4) leachate recycle -- in which the solution is pumped out of a contaminated area and recycled through the plot. Organics in solution can usually be at least partially treated by land application. However, the space and time requirements associated with this technology, combined with general constraints associated with the activated sludge process (Section B.3.1), make direct land treatment inapplicable as a primary treatment

process for the proposed action. If the waters were treated to meet effluent targets for non-nutrient contaminants (such as arsenic, radium, selenium, uranium, and fluoride), land irrigation could be considered a feasible treatment approach for nitrate removal (Morrison-Knudsen Engineers 1988b). Thus, using conservative operating parameters (e.g., low nitrogen loading rate), subsurface drainage, and monitoring and runoff controls, land treatment following initial contaminant removal is considered potentially applicable to the proposed action.

B.4 REFERENCES (APPENDIX B)

Awerbuck, L., et al., 1986, *Recovery of Agricultural Drainage Water Using Desalination Technology*, presented at National Water Supply Improvement Association Conference, Washington, D.C., June 8-12.

Bellak, E., 1971, *Arsenic Removal from Potable Water*, Journal of the American Water Works Association, *63*: 454-458.

Bencar, A.K., and R.W. Kneip, Jr., 1988, *Biological Treatment of Nitrate-Bearing Wastewaters from an Uranium Production Plant*, Report FMPC-2102, Westinghouse Materials Company of Ohio, Cincinnati.

California Department of Health Services, 1986, *Alternative Technology for Recycling and Treatment of Hazardous Wastes*, Toxic Substances Control Division, Third Biennial Report, July.

Clifford, D., W. Vijjeswarapu, and S. Subramonian, 1988, *Evaluating Various Adsorbents and Membranes for Removing Radium from Groundwater*, Journal of the American Water Works Association, *80*(7):94-104.

Culp, R.L., G.M. Wesner, and G.L. Culp, 1978, *Handbook of Advanced Wastewater Treatment*, 2nd ed., Van Nostrand Reinhold Company, New York.

Dobbs, R.A., and J.M. Cohen, 1980, *Carbon Adsorption Isotherms for Toxic Organics*, EPA-600/8-80-023, prepared for U.S. Environmental Protection Agency, Municipal and Environmental Research Laboratory, Cincinnati, Ohio, April.

Dyksen, J.E., and A.F. Hess, 1986, *Meeting Revised Drinking Water Regulations Using Conventional Treatment Methods*, Proceedings of the 1986 Specialty Conference, Environmental Engineering, July 8-10, Cincinnati, Ohio, W. Cawley and J.M. Morand (eds.), American Society of Civil Engineers, New York.

Environmental Science and Engineering, Inc., 1986, *Removal of Volatile Organic Chemicals from Potable Water*, Noyes Data Corporation, Park Ridge, N.J., pp. 55-56.

Francis, C.W., and C.W. Hancher, 1981, *Biological Denitrification of High Nitrate Wastes Generated in the Nuclear Industry*, in Biological Fluidized Bed Treatment of Water and Wastewater, P.F. Cooper and B. Atkinson, eds., Ellis Horwood Ltd., Chichester, England.

Gupta, S.H., and K.Y. Chen, 1978, *Arsenic Removal by Adsorption*, Journal of the Water Pollution Control Federation, *50*(3):493-506.

Hathaway, S.W., and F. Rubel, Jr., 1987, *Removing Arsenic from Drinking Water*, Journal of the American Water Works Association, *79*:61-65.

Jacobs Engineering Group, 1987, *Summary of Comments from Review of Weldon Spring Wastewater Treatment Feasibility Documents*, MKE Doc. No. 5121-Q:WT-R-04-0090-00, prepared by Jacobs Engineering Group, HTM Staff, Pasadena, Calif., for U.S. Department of Energy, Feb.

MacNeil, J.C., 1988, *Membrane Separation Technologies for Treatment of Hazardous Wastes*, CRC Critical Reviews in Environmental Control, *18*(2):91-131.

Mathur, A.K. and K.K. Dwivedy, 1988, *A Biogenic Approach to the Treatment of Uranium Mill Effluents*, Uranium, *4*:358-394.

Merrill, D.T., et al., 1986, *Field Evaluation of Arsenic and Selenium Removal by Iron Coprecipitation*, Journal of the Water Pollution Control Federation, *58*(1):18-26.

Morrison-Knudsen Engineers, Inc., 1987, *Contaminated Water Treatment Plants, Quarry and Raffinate Pits, Technical Evaluation of Proposals*, MKE Document No. 5121-G:WT-R-02-0721-01, San Francisco, Calif., prepared for U.S. Department of Energy, Nov. 30.

Morrison-Knudsen Engineers, Inc., 1988a, *WSSRAP Quarry Contaminated-Water Treatment Engineering Evaluation/Cost Analysis*, MKE Document No. 5121-Q:EN-N-01-0611-00, San Francisco, Calif., prepared for U.S. Department of Energy, July 25.

Morrison-Knudsen Engineers, Inc., 1988b, *WSSRAP Disposal Facility Contaminated-Water Treatment Engineering Evaluation/Cost Analysis*, MKE Document No. 5121-R:EN-R-01-0239-00, prepared by Morrison-Knudsen Engineers, Inc., San Francisco, Calif., for U.S. Department of Energy, Oak Ridge Operations, Oak Ridge, Tenn., Sept. 16.

Patterson, J.W., 1985, *Industrial Wastewater Treatment Technology*, 2nd ed., Butterworth Publishers, Stoneham, Mass.

Paulson, E.G., 1977, *Reducing Fluoride in Industrial Wastewater*, Chemical Engineering/Deskbook Issue, October 17, pp. 84-94.

Reid, G.W., T. Lassovsky, and S. Hathaway, 1985, *Treatment, Waste Management, and Cost for Removal of Radioactivity from Drinking Water*, Health Physics, *48*(5):671-693.

Schlicher, R.J., and M.M. Ghosh, 1985, *Separation of Heavy Metals*, American Institute of Chemical Engineers Symposium Series, *81*(243):152-163.

Snider, E.H., 1987, *PCBs and DEHPs in Wastewater*, Pollution Engineering, *19*(3):48-49.

Sorg, T.J., 1988, *Methods for Removing Uranium from Drinking Water*, Journal of the American Water Works Association, *80*(7):105-111.

Sorg, T.S., and G.S. Logsdon, 1978, *Treatment Technology to Meet the Interim Primary Drinking Water Regulations for Inorganics: Part 2*, Journal of the American Water Works Association, *70*(7):379-393.

U.S. Environmental Protection Agency, 1973, *Process Design Manual for Carbon Adsorption*, Oct.

U.S. Environmental Protection Agency, 1982, *EPA Treatability Manual, Volume III, Technologies for Control/Removal of Pollutants*, EPA-600/2-82-001c.

U.S. Environmental Protection Agency, 1985, *Handbook, Remedial Action at Waste Disposal Sites (Revised)*, EPA-625/6-85/006, Oct.

APPENDIX C:

TREATMENT TECHNOLOGIES AND SYSTEMS THAT ARE APPLICABLE TO THE PROPOSED ACTION

APPENDIX C:

TREATMENT TECHNOLOGIES AND SYSTEMS THAT ARE APPLICABLE TO THE PROPOSED ACTION

The potential treatment technologies for the proposed action were screened in Appendix B. The results of this screening are summarized in Section C.1 of this appendix. In Section C.2, the technologies identified as potentially applicable are combined into specific options for the treatment of contaminated surface waters impounded at the chemical plant area. General considerations for the screened technologies, as assembled into specific treatment options, are addressed in Section C.3. Based on a comparative analysis of these options, the specific treatment system for the proposed action is identified in Section C.4. Consideration of treatment to levels "as low as reasonably achievable" (ALARA) is discussed in Section C.5.

C.1 SCREENING OF POTENTIAL TREATMENT TECHNOLOGIES

Based on the screening of potential technologies in Appendix B and a consideration of the contaminants of concern (see Section 2.4.5), the following technologies are considered applicable to treatment of the impounded surface waters:

- Equalization/detention,
- Density separation (clarification and flotation),
- Flocculation,
- Filtration (granular media),
- Adsorption (granular activated carbon and activated alumina),
- Vapor recompression/distillation,
- Neutralization,
- Coagulation/precipitation,
- Oxidation/reduction (chlorination),
- Ion exchange, and
- Biological denitrification (fluidized bed reactor and land treatment).

Mechanical drying and filter press filtration are considered potentially applicable for follow-on volume reduction of process wastes.

C.2 ASSEMBLY OF TECHNOLOGIES INTO SPECIFIC TREATMENT OPTIONS

Specific treatment options for the proposed action have been developed on the basis of the screened technologies and the following considerations:

- The treatment goal would be to reduce contaminant concentrations to meet the effluent targets identified in Chapter 7 of this EE/CA (see Tables 6 and 7).

- Each option includes a pretreatment step for solids separation, i.e., sedimentation in an equalization/detention basin.

- Distillation is generally considered a single-stage process; pretreatment (e.g., degasification) is not identified separately. The addition of follow-on ion exchange would make the distillation option a two-stage process.

- Each of the remaining treatment options has four general process stages:

  - Chemical addition for coagulation/precipitation (with clarification) and cyanide oxidation;

  - Solid/liquid separation for the removal of suspended solids;

  - Ion exchange and/or adsorption for the removal of residual contaminants; and

  - Biological denitrification for the removal of nitrates.

- Flocculation and neutralization are considered part of the coagulation/precipitation process because they involve chemical addition to support contaminant removal. Lime treatment and coagulation for first-stage removal are considered separately; both rely on gravity settling (clarification) for solid/liquid separation.

- Second-stage solid/liquid separation is achieved by granular media filtration.

- Ion exchange and adsorption on granular activated carbon (GAC) and activated alumina are considered support steps for residuals removal; to minimize plugging, the granular media filtration step precedes the ion-exchange and adsorption steps.

- Mechanical drying and filter press filtration are considered as follow-on processes to reduce the volume of process wastes generated by the specific unit operations (e.g., precipitation and denitrification). Filtrate would be returned to the equalization/detention basin. Solid wastes would be containerized and placed in temporary storage on-site.

Five system options were developed for the proposed treatment plant. These options, which are composed of distinct unit processes, are identified in Table C.1. The four treatment stages and the removals targeted by component technologies are identified in Table C.2.

TABLE C.1 Treatment System Options and Component Technologies

Treatment System Option	Component Technology: Precipitation: Coagulant Addition	Precipitation: Lime Addition	Oxidation[a]	Granular Media Filtration
1	X	-	X	X
2	X	-	X	X
3	-	X	X	X
4	-	X	X	X
5	-	-	-	-

Treatment System Option	Component Technology: Ion Exchange	Adsorption onto Activated Alumina and GAC	Distillation	Biological Denitrification: Land Treatment	Biological Denitrification: Fluidized Bed Reactor[b]
1	X	X	-	X	-
2	X	X	-	-	X
3	X	X	-	X	-
4	X	X	-	-	X
5	X	-	X	-	-

[a]Oxidation to remove cyanide would probably consist of chlorination.

[b]Clarification, filtration, and ion exchange would probably be required after the fluidized bed reactor to achieve the targeted nitrate removal.

TABLE C.2 Removal of Contaminants Targeted by Staged Process Technologies[a]

Treatment System Option	First-Stage Treatment				Second-Stage Treatment[b]
	Chemical Coagulation/ Clarification	Lime Addition/ Clarification	Oxidation	Distillation	Granular Media Filtration
1	As, Mn, other metals, Se, U, Th, Ra, F, SO_4	-[c]	CN	-	SS
2	As, Mn, other metals, Se, U, Th, Ra, F, SO_4	-	CN	-	SS
3	-	As, Mn, other metals, U, Th, Ra, SO_4	CN	-	SS
4	-	As, Mn, other metals, U, Th, Ra, SO_4	CN	-	SS
5	-	-	-	All	SS

TABLE C.2 (Cont'd)

Treatment System Option	Third-Stage Treatment[d]		Fourth-Stage Treatment[b]	
	Adsorption	Ion Exchange	Land Treatment	Fluidized Bed Reactor
1	F, As, Se, U, Ra, organics	U, Th, Ra, As, Se, F, SO_4, NO_3, Cl	NO_3, Ra, U, organics	-
2	F, As, Se, U, Ra, organics	U, Th, Ra, As, Se, F, SO_4, NO_3, Cl	-	NO_3, Ra, U, organics
3	F, As, Se, U, Ra, organics	U, Th, Ra, As, Se, F, SO_4, NO_3, Cl	NO_3, Ra, U, organics	-
4	F, As, Se, U, Ra, organics	U, Th, Ra, As, Se, F, SO_4, NO_3, Cl	-	NO_3, Ra, U, organics
5	-	U, Th, Ra, As, Se, F, SO_4, NO_3, Cl	-	-

[a]Contaminants targeted for removal are defined as follows: As = arsenic; Cl = chloride; CN = cyanide; F = fluoride; Mn = manganese; NO_3 = nitrate; organics includes 2,4-DNT, a primary organic contaminant for the proposed action; other metals = secondary contaminant metals; Ra = radium; Se = selenium; SO_4 = sulfate; SS = suspended solids; Th = thorium; U = uranium.

[b]This treatment stage is associated only with nondistillation process options.

[c]A hyphen indicates that the category is not applicable.

[d]Ion exchange is a second-stage process for Option 5, a third-stage process for Options 2 and 4, and a fourth-stage process for Options 1 and 3.

The major differences between the five options are as follows. Option 5 is primarily a two-stage distillation process that includes ion exchange. Adsorption may also be considered as a polishing step to remove residual contaminants if determined to be necessary for a specific waste stream. Mechanical drying would be used to reduce waste volume. Options 1 through 4 are four-stage nondistillation systems that differ from each other with respect to their component processes for chemical addition and nitrate removal. In terms of first-stage coagulation/precipitation, Options 1 and 2 rely on coagulant addition whereas Options 3 and 4 use lime treatment. Oxidation to remove cyanide, probably with low-dose chlorine addition, completes the first-stage chemical addition step of the nondistillation alternatives. To achieve second-stage solids separation, all four options rely on granular media filtration. To achieve the third-stage removal of residual contaminants, all four options include adsorption on activated alumina and GAC; ion exchange is also a third-stage process for Options 1 and 3. For the fourth-stage nitrate removal, Options 1 and 3 rely on land treatment whereas Options 2 and 4 use a fluidized bed reactor. Options 2 and 4 would also include aeration for residual methanol removal, clarification and granular media filtration for suspended solids removal, and ion exchange for residual ion removal. The unit operations process flow schematic for the nondistillation options is illustrated in Figure C.1; the schematic for the distillation option is illustrated in Figure C.2.

C.3 GENERAL CONSIDERATIONS FOR TREATMENT OPTIONS

The general applicability and implementation considerations for the screened technologies, as assembled into five system options for treating the surface waters impounded at the chemical plant area, are discussed in Sections C.3.1 through C.3.3. The specific roles of the process technologies are addressed in Section C.3.1, contaminants of concern in Section C.3.2, and process wastes in Section C.3.3.

C.3.1 Process Technologies

Eight broad treatment categories have been identified as potentially applicable to the proposed action: (1) density separation, which includes clarification, pretreatment by equalization/detention, and flotation and flocculation, as appropriate; (2) coagulation/precipitation, which includes coagulant or lime addition and other chemical additions as required (e.g., for neutralization); (3) oxidation; (4) granular media filtration (filter press filtration is also considered potentially applicable for follow-on dewatering of process sludges); (5) ion exchange; (6) adsorption; (7) biological dentrification; and (8) vapor recompression/distillation (with mechanical drying for follow-on volume reduction). Each of these treatment technologies has been proven in field applications under conditions similar to those at the chemical plant area. The roles of these technologies in potential treatment systems for the proposed action are addressed in Sections C.3.1.1 through C.3.1.7.

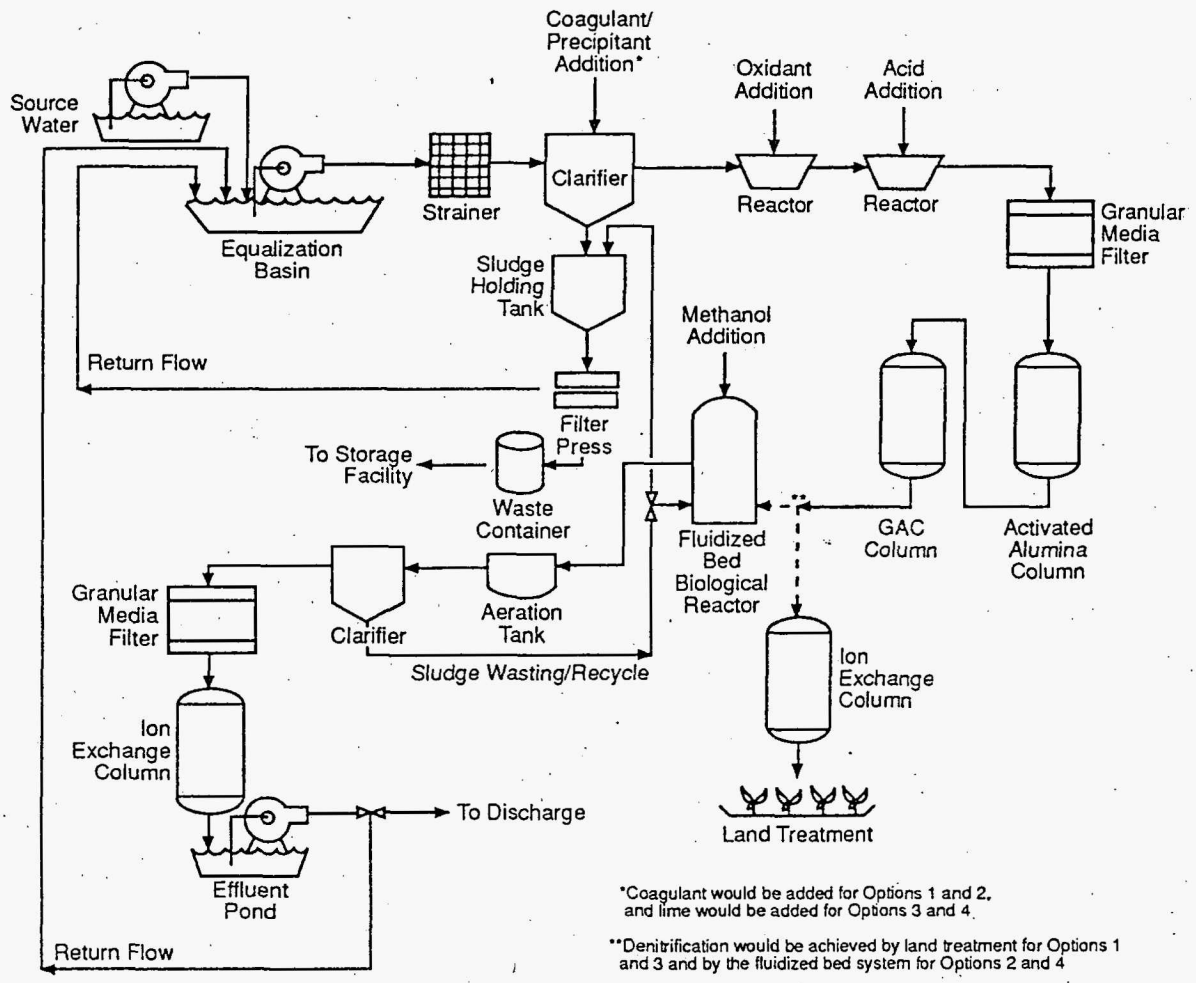

FIGURE C.1 Unit Operations and Process Flow Schematic for the Nondistillation Options

C.3.1.1 Density Separation

Under each of the proposed treatment options, waters impounded at the chemical plant area would be pumped to a lined equalization/detention basin at the treatment plant. The basin would provide the following basic capabilities: (1) storage of surge flows, (2) maintenance of a constant feed (volume and concentration) to the treatment plant, and (3) sedimentation of solids. Hence, the basin would smooth influent variability and initiate pretreatment via the passive removal of suspended solids. The equalization/detention basin would have a capacity of about 6,400 m^3 (1.7 million gal) and would be designed for a detention time of greater than one day and an overflow rate of less than 4.1 $m^3/d\text{-}m^2$ (100 gpd/ft^2). The basin could be constructed with a dividing wall to segregate influents from different water sources that would require different types of treatment. Suspended solids that carry over from the equalization basin into the treatment plant or that are formed during a subsequent treatment step would be removed by separation processes such as clarification and filtration.

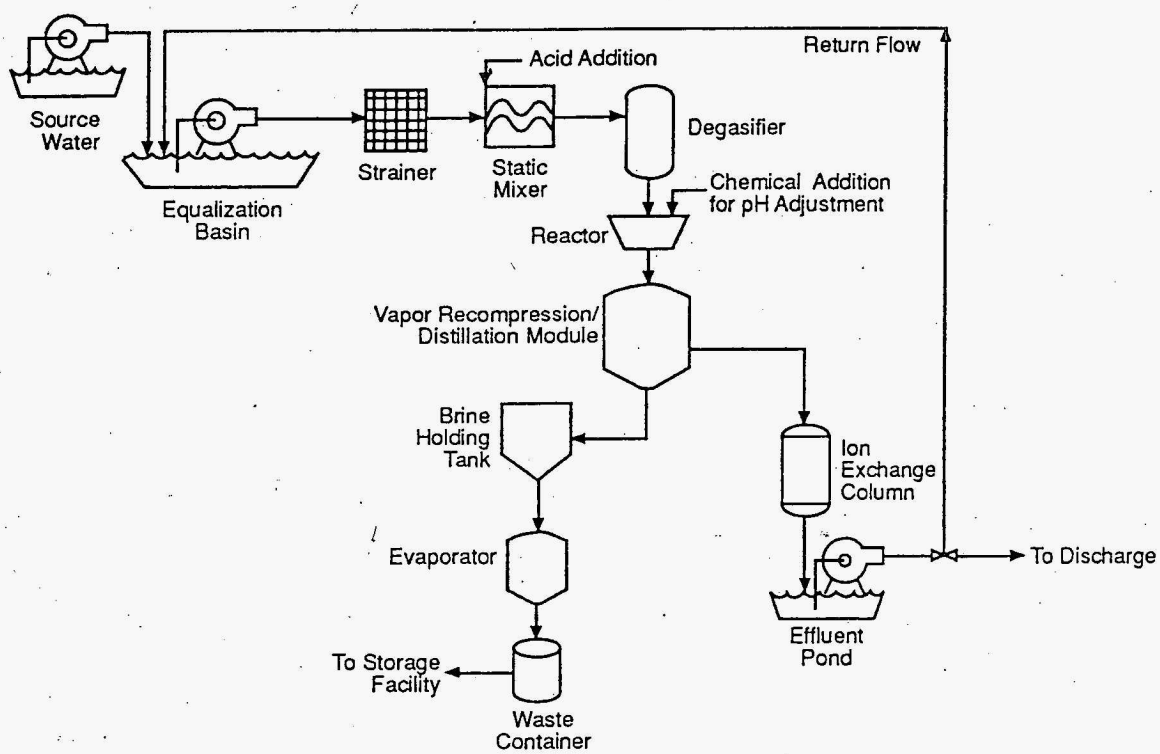

FIGURE C.2 Unit Operations and Process Flow Schematic for the Distillation Option

C.3.1.2 Coagulation/Precipitation

Chemical addition for coagulation/precipitation is the first-stage treatment process for each of the four nondistillation treatment options. Its purpose is to remove radionuclides such as radium, thorium, and uranium; metals such as arsenic and manganese; and possibly selenium and fluoride. Coagulants such as alum or ferric chloride could be used to remove these contaminants; lime treatment would not be effective for removing selenium or fluoride to meet the potential effluent targets. Optimum pH values are generally lower for coagulant addition than for lime treatment. Use of lime for pH adjustment (to pH 6), which is required to optimize arsenic removal, would also enhance uranium, radium, and thorium removal. Levels of suspended solids could be reduced as well because a major portion of these contaminants could settle to the bottom of the clarifier during the coagulation/precipitation process. Neutralization could be achieved, as needed, with hydrochloric or sulfuric acid. Coagulation/precipitation alone would not be expected to achieve the proposed uranium removal to levels as low as reasonably achievable (see Section C.5); therefore, additional processes would be implemented to meet the stringent effluent target.

C.3.1.3 Oxidation

Oxidation would be required for the nondistillation options to reduce cyanide levels in the influent waters. Because this process is specific for cyanide, which is only associated with the raffinate pits, the oxidation unit could be operated in a bypass mode. That is, only those waters requiring cyanide removal would be directed through this unit for chemical (e.g., chlorine) addition. This process would be staged prior to the acid addition for neutralization.

C.3.1.4 Filtration

Granular media filtration of the contaminated water is the second-stage treatment process for each of the four nondistillation treatment options. This process would remove suspended solids such as fine particulate uranium solids and precipitates that did not settle naturally in the clarifier. Conventional sand filters with air scour and backwash provisions would probably be used (see Section B.1.4.1), although additional media (e.g., anthracite) could also be used. Reduction of waste volume is included as a follow-on step for all five treatment options. Filtration of waste sludges for volume reduction under the nondistillation options would be achieved with a filter press (see Section B.1.4.5).

C.3.1.5 Ion Exchange

Ion exchange is a component of each of the treatment options; the inclusion of this process reflects conservatism with regard to system performance. Ion exchange is responsive to the potential for influent variation and could ensure system reliability for the removal of uranium and other radionclides, arsenic and other metals, selenium, fluoride, chloride, and nitrate (see Section B.2.4). To meet the appropriate effluent targets, ion-exchange columns could be bypassed and/or used to treat a portion of the influent flows, as appropriate. Cation and anion exchange columns could be used in series to remove the residual contaminants.

C.3.1.6 Adsorption

An activated alumina adsorption step is included in the nondistillation options to reduce solution levels of arsenic, selenium, and fluoride and to support uranium removal (see Section B.1.9.3). Duplicate adsorption beds would be placed in parallel for continuous operation, i.e., to allow the emptying and refilling of the standby bed at exhaustion. Adsorption on GAC can also reduce levels of organics such as 2,4-DNT and chlorination residuals, if present (e.g., as oxidation residuals). Adsorption could also be considered a possible polishing process for the distillation option.

C.3.1.7 Biological Denitrification

Biological denitrification is a fourth-stage process for each of the four nondistillation options. By this process, nitrates are converted to gaseous nitrogen. In fluidized-bed denitrification, a granular matrix (e.g., sand) is hydraulically expanded to provide a large surface area for the growth of a denitrifying biomass; methanol is commonly added as a carbon substrate (see Section B.3.3). Land treatment involves the spraying or infiltration of wastewater onto vegetated land where nitrates are utilized as biological nutrients in the soil (see Section B.3.6). Both biological denitrification methods would require significant pretreatment to remove other contaminants in the influent waters that would otherwise retard or arrest the required biological reactions (see Section B.3). Denitrification by land treatment would require considerable land area, low loading rates (170 kg/ha [150 lb/acre] of nitrogen per year), subsurface drainage, runoff control, monitoring, and the selection of a crop with high nitrogen uptake potential.

C.3.1.8 Vapor Recompression/Distillation

Vapor recompression/distillation is the focus of the two-stage treatment option, with ion exchange included to achieve an added level of uranium removal. Adjustment of solution pH could be necessary prior to the vapor recompression stage if acid pretreatment and carbon dioxide stripping are used to reduce scaling by carbonates. Suspended solids are not typically a problem for vapor recompression equipment unless oil is present. In this case, removal of suspended solids might be required prior to degasification to prevent plugging; the oil would be expected to float above the submerged intake in the equalization basin. This process scheme is expected to meet all of the effluent targets for the proposed action (see Section B.1.11).

C.3.2 Contaminants of Concern

The contaminants of concern for the proposed action are identified in Section 2.4.5. The removal of these contaminants by unit processes of the proposed treatment options are addressed in Sections C.3.2.1 and C.3.2.2.

C.3.2.1 Primary Contaminants

To achieve the potential health-based effluent targets for contaminants of concern in the impounded surface waters (see Appendix D), treatment must be employed to remove the contaminants. Primary contaminants that would be removed by the five treatment system options are arsenic, manganese, selenium, chloride, fluoride, nitrate, cyanide, radium, uranium, and organics such as 2,4-DNT. All of the contaminants would be removed by the distillation option. The contaminants removed by unit operations of the nondistillation options are as follows:

- Arsenic would be removed by adsorption on activated alumina, supported by chemical addition for coagulation/precipitation and ion exchange;

- Manganese would be removed by chemical addition for coagulation/precipitation;

- Selenium would be removed by ion exchange, possibly supported by chemical addition for coagulation and adsorption on activated alumina;

- Chloride would be removed by ion exchange;

- Fluoride would be removed by adsorption on activated alumina, supported by ion exchange and possibly chemical addition for coagulation;

- Nitrate would be removed by biological denitrification supported by ion exchange;

- Cyanide would be removed by oxidation to cyanate, e.g., by alkaline chlorination;

- Radium would be removed by chemical addition for coagulation/precipitation, supported by ion exchange and possibly by adsorption on activated alumina and biological treatment;

- Uranium would be removed by chemical addition for coagulation/precipitation, supported by ion exchange, adsorption on activated alumina, and possibly biological treatment; and

- Organics such as 2,4-DNT would be removed by adsorption on GAC, supported by biological treatment.

C.3.2.2 Secondary Contaminants

In addition to removing the primary contaminants, the treatment system could also be required to remove antimony, beryllium, chromium, copper, iron, lead, nickel, sulfate, thorium, and possibly asbestos because the upper ranges of these contaminants in the surface waters impounded at the chemical plant area might exceed potential effluent targets. As for the primary contaminants, distillation would effectively remove these secondary contaminants; their removal by the nondistillation treatment options is addressed below.

Equalization/detention, coagulation/precipitation, and other technologies included in the treatment system of each nondistillation option to remove the primary contaminants are expected to effectively reduce the levels of secondary contaminants as well. Thus, no additional process technologies have been identified for their removal. If monitoring of the treated water indicated that effluent limits would not be met upon discharge, the effluent stream would be returned to the treatment plant for additional processing.

Asbestos could be a contaminant in the influent stream due to the presence of some decontamination debris in the raffinate pits and in the bulk wastes that will be stored at the temporary storage area. Asbestos is expected to be removed during the chemical addition/clarification and filtration processes. The effluent would be recycled and subsequently filtered as necessary. Antimony, beryllium, chromium, copper, iron, lead, and nickel are also expected to be removed as a result of chemical addition supported by filtration processes that are included in the treatment system for removal of primary contaminants. Operating conditions could be easily modified, as appropriate. Thorium is typically insoluble at neutral pH and readily settles out of solution; in acidic solutions, it can be effectively removed by ion exchange. Therefore, appropriate processes are already included in the potential nondistillation options to meet the effluent target.

The removal of sulfate could require a process modification for the nondistillation options, i.e., the addition of a new chemical such as a barium salt at the first-stage treatment step. The chemical addition of a barium salt would be straightforward and easy to implement. If this modification is required, the choice of precipitant or coagulant is important. Adding a chemical coagulant such as ferrous sulfate would be counterproductive for sulfate removal because the solution concentration of this anion would increase. Precipitation of sulfate by lime, which is limited by the solubility of calcium sulfate, would result in residual sulfate levels greater than the potential effluent target for sulfate. In any case, the requirement for a minor process modification of the nondistillation treatment options, if needed to remove sulfate, would be independent of the treatment system.

Organic compounds are potential contaminants in the influent stream. If effluent monitoring indicated that organics were not adequately removed during a first pass through the system, the flow would be recycled and the process could be modified. Removal of organics can be achieved by adsorption on GAC, supported by biological treatment.

C.3.3 Process Wastes

Wastes that would be generated by the various treatment processes include chemical sludges from coagulation/precipitation, spent activated alumina (and possibly carbon), spent ion-exchange resins, and -- for distillation -- residues from the vapor recompression/distillation process. Backwash water from filters, ion-exchange columns, and adsorption beds would be recycled to the equalization basin for solids settling and subsequent treatment. Pending comprehensive decisions on waste disposal for the Weldon Spring site, process wastes would be dewatered and containerized for temporary storage, as appropriate (i.e., in the adjacent temporary storage area or in a nearby building [Building 434] that was recently modified to comply with the performance requirements for storage facilities identified in the Solid Waste Disposal Act, as amended).

C.4 SPECIFIC TREATMENT SYSTEM

The treatment system preferred for the proposed action was determined by evaluating the five options identified in Section C.2 according to effectiveness, implementation considerations, and reasonable cost. Each of the proposed options would reduce contaminant levels to meet appropriate effluent targets (see Chapter 7). Long-term environmental conditions would be improved because treatment would reduce (1) the toxicity, mobility, and volume of contaminated surface waters impounded at the chemical plant area and (2) the potential exposure to associated contaminants. In the short term, limited environmental impacts could occur during construction and operation of the treatment facility, but these impacts are expected to be temporary and could be mitigated (see Section 6.3). The areas required for construction of the treatment system under each option are listed in Table C.3. About 0.7 ha (1.6 acres) would be affected by the proposed treatment system. The two effluent ponds and the equalization basin would each cover about 1,900 m^2 (20,000 ft^2) to a subsurface depth of about 3 m (10 ft).

Each of the five treatment systems could be constructed and operated in a safe manner with conventional equipment and standard procedures. However, the options differ in terms of effectiveness and implementation considerations. For the precipitation step, Options 3 and 4 (lime treatment) may have a slight advantage over Options 1

TABLE C.3 Estimated Plant Areas, Energy Consumption, and Waste Volumes for Treatment System Options[a]

Treatment System Option	Plant Area		Energy Consumption (kWh)	Waste Volume[b]	
	m^2	yd^2		m^3	yd^3
1	353	422	769	2.56	3.35
2	446	533	946	3.29	4.31
3	353	422	769	2.97	3.88
4	446	533	946	3.70	4.84
5	221	264	9,676	7.09	9.27

[a]Design flow rate = 100 gpm, for raffinate pits only; operating quantities are per 24-hour operating day.

[b]This estimate does not include volume reduction resulting from follow-on mechanical drying for Option 5 (see Chapter 7 for final volume estimates for the preferred system).

Source: Data from Morrison-Knudsen Engineers (1988).

and 2 (chemical coagulation) because (1) the effectiveness of lime addition for the types of contaminants present in the influent waters has been demonstrated in the field and (2) the sludge generated by coagulation is more voluminous (see Table C.3) and its manageability is somewhat less straightforward. Option 5 (vapor recompression/distillation) would generate the largest initial volume of waste, but mechanical drying would significantly reduce the final volume.

The primary difference between the nondistillation options is driven by the effectiveness and implementation of nitrate removal. Options 2 and 4 (fluidized bed reactor) would be much more straightforward to implement for denitrification than Options 1 and 3 (land treatment) because of the relative ease of construction and system control, which would reduce process sensitivity to site environmental conditions. The fluidized bed reactor system can tolerate shock loading whereas land treatment cannot. Also, temperature and pH can be readily controlled, and monitoring is relatively straightforward. In contrast, conservative operating conditions, including low loading rates and considerable land surface areas, would be required for land treatment to ensure appropriate final nitrate concentrations throughout the operating period. Biological denitrification can be adversely affected by cold, and operating temperatures would have to be maintained above 20° C (68° F) for effective treatment. In addition, subsurface drainage, monitoring, and runoff controls would be required for land treatment. Maintenance of these conditions year-round would be costly, and the effectiveness of contaminant removal would probably be compromised by environmental conditions and influent variability.

Implementation of Option 5 (vapor recompression/distillation) would be similar to that of Options 2 and 4 because standard equipment would be readily available. The effectiveness of vapor recompression/distillation, a physical system, would be very high relative to a combination physicochemical and biological system because distillation can remove a wide range of contaminants over a range of concentrations. In fact, higher influent concentrations would increase process efficiency. Flows significantly lower than design could also be accommodated more easily by the distillation option compared with the nondistillation options. Once constructed, vapor recompression/distillation can be brought on-line within a matter of hours at maximum treatment efficiency. In contrast, start-up and optimization of the biological denitrification components of the nondistillation options require days to weeks, and biological systems are much more difficult to maintain. Biological upsets that result in treatment failure are common when influent concentrations vary, which could occur when the raffinate pits were pumped down and/or other influent streams changed (see Chapter 7 and Appendix A). Temperature, pH, and the presence of algae in the influent can also impact the effectiveness of denitrification. The distillation option would be much less sensitive to environmental conditions than the nondistillation options. Thus, the biological component of the nondistillation options would probably require numerous modifications to respond to influent variations, whereas the distillation system would not.

The relative costs of the treatment system options were also considered in evaluating potential systems for the proposed action. One factor affecting cost is the energy requirement of each option. Options 2 and 4 are somewhat more energy intensive than Options 1 and 3 due to the fluidized bed process. Option 5 is considerably more

energy intensive than Options 1 through 4. The energy requirements for each option are listed in Table C.3.

A preliminary cost comparison was prepared for the five initial treatment options (which focused on treating only the raffinate pit waters) to provide general information for screening purposes (Morrison-Knudsen Engineers 1988). The estimated costs for the five options (as July 1988 dollars) were based on a design flow rate of 100 gpm for 24 hours/day, using standard cost guidance (Hansen et al. 1979; DeWolf et al. 1984; EPA 1985). For the nondistillation options, capital costs were estimated to be about $2.17 million for land treatment (Options 1 and 3) and about $1.97 million for the fluidized bed reactor (Options 2 and 4). The capital cost for the distillation option (Option 5) without a follow-on mechanical dryer was estimated to be about $1.83 million; this value would increase to about $2.01 million with the addition of a dryer. The estimated operation and maintenance (O&M) cost for Option 5 without the dryer was $2,022/day; the addition of a dryer would reduce this value to $1,501/day (due to savings in disposal costs). The estimated O&M costs for Options 1 and 3 were $1,177/day and $1,198/day, respectively; those for Options 2 and 4 were somewhat higher at $1,461/day and $1,483/day, respectively. Expressed as the 10-year present worth value, the combined capital and O&M costs for Option 5 ($2.83 million) were somewhat higher than those for Options 1, 2, 3, and 4 ($2.75 million, $2.69 million, $2.77 million, and $2.71 million, respectively). For this present worth analysis, the total costs over 10 years of operation were discounted to present costs using a 10% discount rate (Morrison-Knudsen Engineers 1988).

Based on a subsequent comparative evaluation of the treatment system options and consideration of additional influents to the treatment plant (see Chapter 7), a dual (hydrid) treatment system -- comprised of the distillation option, Option 5, in parallel with most of the physicochemical components of Option 4 (all but oxidation) -- was identified as the system appropriate for the proposed action (see Figure C.3). The proposed water treatment plant should be capable of treating a variety of influents (see Chapters 3 and 7 and Appendix A). Thus, the dual system was selected to provide treatment flexibility and optimize both system effectiveness and volume reduction. For example, waters that do not contain nitrate or cyanide could be treated in the conventional physicochemical system. Conversely, those waters requiring nitrate or cyanide removal would be directed to the distillation module of the plant. The construction and operation of a dual system would ensure (1) applicability of the treatment process for all potential influents and (2) cost-effectiveness for the project.

The nominal design capacity of each treatment train is 440 m^3/d (80 gpm), with a maximum capacity of 550 m^3/d (100 gpm). The capital cost of this dual system is estimated to be about $2.99 million, and the annual O&M cost is estimated to average about $230,000 (as May 1990 dollars). This amount will vary depending on the influent sequencing (see Chapters 3 and 7). The 10-year present worth value for this system is estimated to be about $4.30 million.

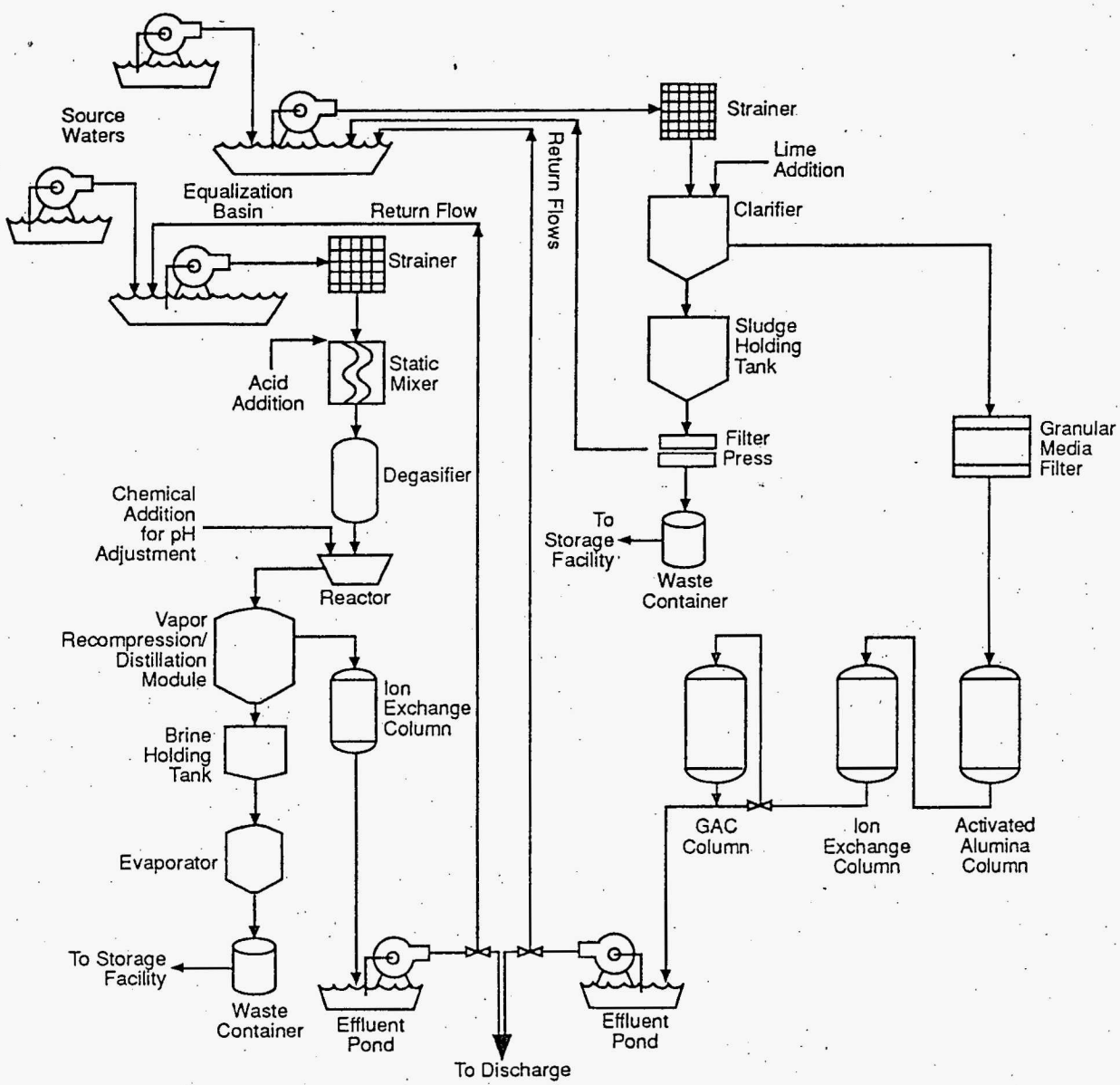

FIGURE C.3 Preferred Treatment System for the Impounded Surface Waters at the Chemical Plant Area

C.5 ALARA CONSIDERATIONS

"As low as reasonably achievable" (ALARA) is a phrase used to describe an approach to radiation exposure control or management whereby the exposures and resulting doses to affected individuals and populations are maintained as far below the specified limits as technical, economic, and social considerations permit. The DOE requires that all radiation exposures be limited to ALARA levels in order to minimize the total risk to potential receptors. The ALARA process is based on the conservative assumptions that the probability of an occurrence of health effects from irradiation

exhibits no threshold and that the response is linearly proportional to the received dose. The ALARA process therefore requires that every effort should be made to reduce radiation exposure as much as is reasonably achievable. Consistent with the ALARA process, the proposed action would be undertaken in a manner that minimizes the potential for incremental radiation exposure.

In designing the proposed treatment plant, the ALARA process was applied to the establishment of a treatment goal for uranium, a radionuclide of concern for the proposed action and the only primary contaminant for which no health-based standard has been promulgated. The uranium concentrations in certain surface waters impounded at the chemical plant area exceed the limit of 550 pCi/L derived from DOE guidelines for discharges of total uranium to uncontrolled areas (see Appendix D); therefore, the water must be treated to this level prior to its release. Given that a treatment plant must be constructed, the analysis of potential unit operations for the plant focused on the development of a system that could be designed and operated in a manner to reduce the level of residual uranium in the treated water as far below 550 pCi/L as reasonably achievable, i.e., to 100 pCi/L and below. In addition, it is suggested that the system be operated in a manner that would not only ensure an effluent uranium concentration of 100 pCi/L but that this level be further reduced to as much below 100 pCi/L as could reasonably be achieved. To provide a conservative safety factor that would address the potential for variable influent flow and uranium concentration over time, the design goal of the plant would be 30 pCi/L. Thus, the level of uranium in the treatment plant effluent would range from 30 to 100 pCi/L.

The inclusion of a vapor recompression/distillation module in the proposed treatment plant also supports the ALARA process because it would most effectively and reliably reduce contaminant levels and related exposures to ALARA levels over a range of potential influent variability. Ion exchange is included as a follow-on process to provide additional contaminant removal capability.

In summary, the proposed treatment of contaminated surface waters impounded at the chemical plant area would implement DOE's ALARA process through a commitment to minimize the potential for radiation exposure of the public. This would be achieved by constructing and operating an advanced treatment system to reduce the level of uranium in these waters to 30 to 100 pCi/L. Concerted efforts would be made throughout the operational period of the treatment plant to minimize the levels of uranium to as far below 100 pCi/L as reasonably achievable.

C.6 REFERENCES (APPENDIX C)

DeWolf, G., et al., 1984, *The Cost Digest: Cost Summaries of Selected Environmental Control Technologies*, EPA-600/8-84-010, Oct.

Hansen, S.P., R.C. Gumerman, and R.L. Culp, 1979, *Estimating Water Treatment Costs, Volume 3, Cost Curves Applicable to 2,500 gpd to 1 mgd Treatment Plants*, EPA-600/2-79-162c, U.S. Environmental Protection Agency, Cincinnati, Ohio, Aug.

Morrison-Knudsen Engineers, Inc., 1988, *WSSRAP Disposal Facility Contaminated-Water Treatment Engineering Evaluation/Cost Analysis*, MKE Document No. 5121-R:EN-R-01-0239-00, prepared by Morrison-Knudsen Engineers, Inc., San Francisco, Calif., for U.S. Department of Energy, Oak Ridge Operations, Oak Ridge, Tenn., Sept. 16.

U.S. Environmental Protection Agency, 1985, *Handbook, Remedial Action at Waste Disposal Sites (Revised)*, EPA-625/6-85/006, Oct.

APPENDIX D:

POTENTIALLY APPLICABLE OR RELEVANT AND APPROPRIATE REQUIREMENTS FOR THE PROPOSED REMOVAL ACTION

APPENDIX D:

POTENTIALLY APPLICABLE OR RELEVANT AND APPROPRIATE REQUIREMENTS FOR THE PROPOSED REMOVAL ACTION

Potential requirements for a proposed action can be grouped into two general categories: (1) applicable or relevant and appropriate requirements (ARARs) and (2) "to-be-considered" (TBC) requirements. The first category consists of promulgated standards (e.g., public laws codified at the state or federal level) that may be applicable or relevant and appropriate to all or part of the proposed action. The second category consists of standards or guidelines that have been published but not promulgated and that may have specific bearing on all or part of the action, e.g., DOE Orders.

Any regulation, standard, requirement, criterion, or limitation under any federal or state environmental law may be either *applicable* or *relevant and appropriate* to a remedial action, but not both. Consistent with guidance from the EPA on ARARs, only applicable requirements are evaluated for off-site actions, whereas both applicable and relevant and appropriate requirements are evaluated for on-site actions. On-site actions must comply with a requirement that is determined to be relevant and appropriate to the same extent as one that is determined to be applicable. However, a determination of relevance and appropriateness may be applied to only portions of a requirement, whereas a determination of applicability is applied to the requirement as a whole. On-site actions must comply with substantive requirements of ARARs but not related administrative and procedural requirements. For example, remedial actions conducted on-site would not require a permit but would be conducted in a manner consistent with the permitted conditions. Only those state laws may become ARARs that are (1) promulgated, such that they are legally enforceable and generally applicable (i.e., consistently applied) and (2) more stringent than federal laws.

In addressing a requirement that may affect the proposed action, a determination is made regarding its relationship to (1) the location of the action, (2) the contaminants involved, and (3) the specific components of the action. A potential ARAR is applicable if its prerequisites or regulated conditions are specifically met by the conditions of the proposed action (e.g., location in a floodplain); if the conditions of a requirement are not specifically applicable, then a determination must be made as to whether they are sufficiently similar to be considered both relevant *and* appropriate (e.g., in terms of contaminant similarities and the nature and setting of the proposed action).

Potential TBC requirements are typically considered only if no promulgated requirements exist that are either applicable or relevant and appropriate. Thus, TBC requirements may be considered secondary to ARARs; in fact, they are often based on promulgated standards and can necessitate the same degree of compliance as ARARs (e.g., DOE Orders). Potential location-specific, contaminant-specific, and action-specific ARARs and TBC requirements for the proposed removal action are identified and evaluated in Tables D.1, D.2, and D.3, respectively.

The preliminary ARAR and TBC determinations for these requirements are also indicated on the tables. Because this appendix presents a comprehensive list of

requirements with considerable overlap of regulated conditions, all determinations have been identified as "potentially" applicable, relevant and appropriate, or to be considered. These determinations will be finalized in consultation with the state of Missouri and EPA Region VII prior to implementation of the proposed action. During finalization, the requirements identified as potentially applicable will be reviewed to confirm direct applicability; only one requirement will be finalized from among those that regulate the same conditions. For those identified as potentially relevant and appropriate and TBC requirements, the specific portion(s) of the requirements that have bearing on the proposed action, and the manner in which compliance would be achieved, will be finalized. After the finalization process, certain of the requirements will remain potentially an ARAR or a TBC requirement as the action proceeds, pending identification of the existence of their prerequisites or regulated conditions (e.g., the presence of cultural resources or threatened or endangered species in the affected area).

TABLE D.1 Potential Location-Specific Requirements

Potential ARAR	Location	Requirement	Preliminary Determination	Remarks
Antiquity Act; Historic Sites Act (16 USC 431-433; 16 USC 461-467; 40 CFR 6.301(a))	Land	Cultural resources, such as historic buildings and sites and natural landmarks, must be preserved on federal land to avoid adverse impacts.	Potentially applicable	No adverse impacts to such resources are expected to result from the proposed action; however, if these resources were affected, the requirement would be applicable.
National Historic Preservation Act, as amended (16 USC 470 et seq.; 40 CFR 6.301(b); 36 CFR 800)	Land	The effect of any federally assisted undertaking must be taken into account for any district, site, building, structure, or object included in or eligible for the *National Register of Historic Places*.	Potentially applicable	No adverse impacts to such properties are expected to result from the proposed action; however, if these resources were affected, the requirement would be applicable.
Archeological and Historic Preservation Act (16 USC 469; 40 CFR 6.301(c); PL 93-291; 88 Stat. 174)	Land	Prehistorical, historical, and archeological data that might be destroyed as a result of a federal, federally assisted, or federally licensed activity or program must be preserved.	Potentially applicable	No destruction of such data is expected to result from the proposed action. The water treatment plant (WTP) would be in an area that has been considerably disturbed by past human activities; therefore, this area is not expected to contain any such data. However, if these data were affected, the requirement would be applicable.
Archeological Resources Protection Act (16 USC 470(a))	Land	A permit must be obtained if an action on public or Indian lands could impact archeological resources.	Potentially applicable	No impacts to archeological resources are expected to result from the proposed action. The WTP would be in an area that has been considerably disturbed by past human activities; therefore, this area is not expected to contain any such resources. However, if these resources were affected, the requirement would be applicable.
Protection and Enhancement of the Cultural Environment (Executive Order 11593; 40 CFR 6.301)	Land	Historic, architectural, archeological, and cultural resources must be preserved, restored, and maintained, and must be evaluated for inclusion in the *National Register*.	Potentially applicable	No impacts to such resources are expected to result from the proposed action. The WTP would be in an area that has been considerably disturbed by past human activities; therefore, this area is not expected to contain any such resources. However, if these resources were affected, the requirement would be applicable.
Endangered Species Act, as amended (16 USC 1531-1543; 50 CFR 17.402; 40 CFR 6.302(h))	Any	Federal agencies must ensure that any action authorized, funded, or carried out by the agency is not likely to jeopardize the continued existence of any threatened or endangered species or destroy or adversely modify any critical habitat.	Potentially applicable	No critical habitat exists in the affected area, and no adverse impacts to threatened or endangered species are expected to result from the proposed action; however, if such species were affected, the requirement would be applicable.
Missouri Wildlife Code (1989) (RSMo. 252.240; 3 CSR 10-4.111), Endangered Species	Any	Endangered species, i.e., those designated by the Missouri Department of Conservation and the U.S. Department of the Interior as threatened or endangered (see 1978 Code, RSMo. 252.240) may not be pursued, taken, possessed, or killed.	Potentially applicable	No critical habitat exists in the affected area, and no adverse impacts to threatened or endangered species are expected to result from the proposed action. However, if such species were affected, the requirement would be applicable.

TABLE D.1 (Cont'd)

Potential ARAR	Location	Requirement	Preliminary Determination	Remarks
Missouri Wildlife Code (1989) (RSMo. 252.240; 3 CSR 10-4.110), General Prohibition; Applications	Any	Wildlife, including their homes and eggs, may not be taken or molested.	Potentially relevant and appropriate	No wildlife would be actively taken or molested as part of the proposed action. However, wildlife could be disturbed during implementation. Mitigative measures would be taken to minimize potential adverse impacts.
Missouri Wildlife Code (1989) (RSMo. 252.240; 3 CSR 10-4.115), Special Management Areas	Any	Wildlife may not be taken, pursued, or molested on any state or federal wildlife refuge or any wildlife management area, except under permitted conditions.	Potentially relevant and appropriate	No wildlife would be actively taken, pursued, or molested in any wildlife areas as part of the proposed action. However, wildlife could be disturbed during implementation. Mitigative measures would be taken to minimize potential adverse impacts.
Missouri Wildlife Code (1978) (RSMo. 252.040), Taking of Wildlife -- Rules and Regulations	Any	Wildlife may not be taken or pursued, except under permitted conditions.	Potentially relevant and appropriate	No wildlife would be actively taken or pursued as part of the proposed action. However, wildlife could be disturbed during implementation. Mitigative measures would be taken to minimize potential adverse impacts.
Missouri Wildlife Code (1978) (RSMo. 252.240), Endangered species importation, transportation or sale, when prohibited -- how designated -- penalty	Any	The Missouri Department of Conservation must file with the state a list of animal species designated as endangered (for subsequent consideration of related requirements).	Potentially applicable	No critical habitat exists in the affected area, and no adverse impacts to threatened or endangered species are expected to result from the proposed action. However, if such species were affected, the requirement would be applicable.
Missouri Wildlife Code (1978) (RSMo.252.210), Contamination of streams	Stream	It is unlawful to put any deleterious substances into waters of the state in quantities sufficient to injure fish, except under precautionary measures approved by the commission.	Not an ARAR	No fish inhabit the southeast drainage, and no quantities of deleterious substances sufficient to injure fish would be discharged to the southeast drainage.
Fish and Wildlife Coordination Act (14 USC 441-444; 40 CFR 4.302(a))	Any	Adequate protection of fish and wildlife resources is required when any federal department or agency proposes or authorizes any modification (e.g., diversion or channeling) of any stream or other water body or any modification of areas affecting any stream or other water body.	Potentially relevant and appropriate	No modification of streams or stream areas is planned as part of the proposed action. If such modification were to occur, the pertinent requirements of this act would be followed during implementation of the proposed action.
Floodplain Management (Executive Order 11988; 40 CFR 6.302(b))	Floodplain	Federal agencies must avoid, to the maximum extent possible, any adverse impacts associated with direct and indirect development of a floodplain.	Not an ARAR	No floodplain would be adversely affected by the proposed action.
Governor's Executive Order 82-19	Floodplain	Potential effects of actions taken in a floodplain must be evaluated to avoid adverse impacts.	Not an ARAR	No floodplain would be adversely affected by the proposed action.
Protection of Wetlands (Executive Order 11990; 40 CFR 6.302(a))	Wetland	Federal agencies must avoid, to the extent possible, any adverse impacts associated with the destruction or loss of wetlands and the support of new construction in wetlands if a practicable alternative exists.	Not an ARAR	No wetland would be adversely affected by the proposed action.

TABLE D.2 Potential Contaminant-Specific Requirements

Potential ARAR	Contaminant	Medium	Requirement	Determination	Remarks
Safe Drinking Water Act (42 USC 300G); Maximum Contaminant Levels (40 CFR 141, Subpart B); Secondary Maximum Contaminant Levels (40 CFR 193.3); National Primary and Secondary Drinking Water Regulations (54 FR 97, May 22, 1989, Proposed Rules); Maximum Contaminant Level Goals and National Primary Drinking Water Regulations for Lead and Copper (53 FR 160, August 18, 1988, Proposed Rules)	See table	Water	Maximum contaminant levels (MCLs) and secondary maximum contaminant levels (SMCLs) for drinking water supplies are as follows:	Not an ARAR	Effluent from the treatment plant would not be used directly as a drinking water supply; therefore, these requirements are not applicable or relevant and appropriate to the proposed action. However, they are addressed as part of the proposed treatment plant design and may be used in establishing preliminary goals for remediation.

Contaminant	Unit	MCL	SMCL
Metals:			
Aluminum	µg/L	-	-
Arsenic	µg/L	50	-
Barium	µg/L	1,000	-
Cadmium	µg/L	10	-
Chromium	µg/L	50	-
Copper	µg/L	-	1,000
Iron	µg/L	-	300
Lead	µg/L	50	-
Manganese	µg/L	-	50
Mercury	µg/L	2	-
Selenium	µg/L	10	-
Silver	µg/L	50	-
Zinc	µg/L	-	5,000
Anions:			
Chloride	mg/L	-	250
Fluoride	mg/L	-	2
Nitrate as N	mg/L	10	-
Nitrite as N	mg/L	-	-
Sulfate	mg/L	-	250
Radionuclides:			
Gross alpha[a]	pCi/L	15	-
Radium-226 and radium-228	pCi/L	5	-
Others:			
pH	units	-	6.5-8.5
TDS	mg/L	-	500
PCBs	µg/L	-	-
Asbestos fibers >10 µm	no./L	-	-

[a]Including radium-226 but excluding radon and uranium.

TABLE D.2 (Cont'd)

Potential ARAR	Contaminant	Medium	Requirement	Determination	Remarks
National Primary and Secondary Drinking Water Regulations (54 FR 97, May 22, 1989, Proposed Rules); Maximum Contaminant Level Goals and National Primary Drinking Water Regulations for Lead and Copper (53 FR 160, August 18, 1988, Proposed Rules)	See table	Water	Proposed maximum contaminant levels (PMCLs) and proposed secondary maximum contaminant levels (PSMCLs) for drinking water supplies are as follows:	Not an ARAR	Effluent from the water treatment plant would not be directly used as a drinking water supply; therefore, these requirements are not applicable or relevant and appropriate for the proposed action. However, they are addressed as part of the proposed treatment plant design and may be used in establishing preliminary goals for remediation.

Contaminant	Unit	PMCL	PSMCL
Metals:			
Aluminum	µg/L	-	50
Barium	µg/L	5,000	-
Cadmium	µg/L	5	-
Chromium	µg/L	100	-
Copper	µg/L	1,300	-
Lead	µg/L	5	-
Mercury	µg/L	2	-
Selenium	µg/L	50	-
Silver	µg/L	-	90
Anions:			
Nitrate as N	mg/L	10	-
Nitrite as N	mg/L	1	-
Others:			
PCBs	µg/L	0.5	-
Asbestos fibers >10 µm	no./L	7×10^6	-

Potential ARAR	Contaminant	Medium	Requirement	Determination	Remarks
Missouri Safe Drinking Water Act and Missouri Public Drinking Water Regulations	See table	Water	Maximum contaminant levels (MCLs) and secondary maximum contaminant levels (SMCLs) for drinking water supplies are as follows:	Not an ARAR	Effluent from the water treatment plant would not be directly used as a drinking water supply; therefore, these requirements are not applicable or relevant and appropriate for the proposed action. However, they are addressed as part of the proposed treatment plant design and may be used in establishing preliminary goals for remediation.

Contaminant	Unit	MCL	SMCL
Metals:			
Arsenic	µg/L	50	-
Barium	µg/L	1,000	-
Cadmium	µg/L	10	-
Chromium	µg/L	50	-
Copper	µg/L	-	1,000
Iron	µg/L	-	300
Lead	µg/L	50	-
Manganese	µg/L	-	50
Mercury	µg/L	2	-
Selenium	µg/L	10	-
Silver	µg/L	50	-
Zinc	µg/L	-	5,000

TABLE D.2 (Cont'd)

Potential ARAR	Contaminant	Medium	Requirement	Determination	Remarks
Missouri Safe Drinking Water Act and Missouri Public Drinking Water Regulations (Cont'd)					

Contaminant	Unit	MCL	SMCL
Anions:			
Chloride	mg/L	-	250
Fluoride	mg/L	4	2
Nitrate as N	mg/L	10	-
Sulfate	mg/L	-	150
Radionuclides:			
Gross alpha[a]	pCi/L	15	-
Radium-226 and radium-228	pCi/L	5	-

[a]Including radium-226 but excluding radon and uranium.

Potential ARAR	Contaminant	Medium	Requirement	Determination	Remarks
Federal Water Pollution Control Act, Clean Water Act (33 USC 1251-1376); Water Quality Standards (40 CFR 131), National Pollutant Discharge Elimination System (40 CFR 122-125)	Any	Water	States are responsible for reviewing, establishing, and revising water quality standards in accordance with EPA guidance and approval. Permitting authority for surface water discharges is delegated to the states according to the National Pollutant Discharge Elimination System (NPDES) process.	Potentially applicable	State water quality standards are addressed as part of the proposed treatment plant design. Surface water discharge requirements would be applicable to the treatment plant discharge, and it is expected that an NPDES permit will be established.
Missouri Water Quality Standards, Antidegradation (10 CSR 7.031(2))	Those listed in specific criteria of state water quality standards	Water	When water quality exceeds levels necessary to protect beneficial uses, that quality shall be fully maintained and protected. Lowered water quality is allowable only under certain conditions and full satisfaction of intergovernmental and public participation provisions.	Not an ARAR	Discharge of the treated water to the southeast drainage would not lower the water quality in the southeast drainage; therefore, this requirement is neither applicable nor relevant and appropriate.
Missouri Water Quality Standards, General Criteria (10 CSR 20-7.031(3))	General	Water	No contaminant, by itself or in combination with other substances, shall prevent the waters of the state from being (a) free from substances in sufficient amounts to cause the formation of putrescent, unsightly or harmful bottom deposits or prevent full maintenance of beneficial uses; (b) free from oil, scum, and floating debris in sufficient amounts to be unsightly or prevent full maintenance of beneficial uses; (c) free from substances in sufficient amounts to cause unsightly color or turbidity, offensive odor, or prevent full maintenance of beneficial uses; and (d) free from substances or conditions in sufficient amounts to have a harmful effect on human, animal, or aquatic life.	Not an ARAR	The effluent from the water treatment plant would not cause any such effects in the water to which it would be discharged.

TABLE D.2 (Cont'd)

Potential ARAR	Contaminant	Medium	Requirement	Determination	Remarks
Missouri Water Quality Standards, Specific Criteria (10 CSR 20-7.031(4))	See table	Water	Water contaminants should not exceed the following limits:	Potentially applicable	These requirements are based on the most restrictive contaminant concentrations allowable for the designated uses of tributaries to the Missouri River; therefore, these requirements may be applicable to the proposed action.

Contaminant	Unit	Concentration
Metals:		
Antimony	µg/L	146
Arsenic	µg/L	20
Barium	µg/L	1,000
Beryllium	µg/L	5
Boron	µg/L	2,000
Cadmium	µg/L	10
Chromium	µg/L	50
Cobalt	µg/L	1,000
Copper	µg/L	20
Iron	µg/L	300
Lead	µg/L	50
Manganese	µg/L	50
Mercury	µg/L	0.5[a]
Nickel	µg/L	100
Selenium	µg/L	10
Silver	µg/L	5
Thallium	µg/L	13
Zinc	µg/L	100
Anions:		
Chloride plus sulfate	mg/L	1,000[b]
Cyanide	mg/L	0.005
Fluoride	mg/L	2.2
Nitrate as N	mg/L	10

[a]Measured as total recoverable mercury.

[b]For streams with 7-day Q10 low flow (i.e., 10-year low flow measured in any 7-day period) of less than 1 ft^3/s, the concentration of chloride plus sulfate shall not exceed 1,000 mg/L at the 7-day Q10 low flow.

Missouri Water Quality Standards, Toxic Substances (10 CSR 20-7.031(4)(B))	Toxic substances	Water	Other potentially toxic substances for which sufficient toxicity data are not available may not be released to waters of the state until safe levels are demonstrated through bioassay studies.	Not an ARAR	No such substances would be present in the effluent from the water treatment plant.

TABLE D.2 (Cont'd)

Potential ARAR	Contaminant	Medium	Requirement	Determination	Remarks
Missouri Water Quality Standards, Radioactive Materials (10 CSR 7.031(4)(F))	Radionuclides	Water	All streams and lakes shall conform with state and federal limits for radionuclides established for drinking water supply.	Potentially applicable	This requirement may be applicable to the proposed action.
Radiation Protection of the Public and the Environment (DOE Order 5400.5)	Uranium, thorium, radium, and radon	Water	Residual concentrations of radionuclides in water in uncontrolled areas are limited to the following. (For known mixtures of radionuclides, the sum of the ratios of the observed concentration of each radionuclide to its corresponding limit must not exceed 1.0.)	To be considered	Although not promulgated standards, these constitute requirements for protection of the public with which the proposed action will comply.

Isotope	f_1 Value[a]	Concentration[b] (μCi/mL)
$U_{natural}$	0.05	6×10^{-7}
	0.002	6×10^{-6}
Uranium-238	0.05	6×10^{-7}
	0.002	6×10^{-6}
Uranium-235	0.05	6×10^{-7}
	0.002	5×10^{-6}
Uranium-234	0.05	5×10^{-7}
	0.002	5×10^{-6}
Thorium-232	0.0002	5×10^{-8}
Thorium-230	0.0002	3×10^{-7}
Radium-228	0.2	1×10^{-7}
Radium-226	0.2	1×10^{-7}
Radon-222		3×10^{-9}
Radon-220		3×10^{-9}

[a] f_1 is the fraction of a stable element entering the gastrointestinal tract that reaches body fluids.

[b] Exposure conditions assume an ingestion rate of 730 L/yr of water (based on exposure during 365 d/yr).

TABLE D.2 (Cont'd)

Potential ARAR	Contaminant	Medium	Requirement	Determination	Remarks
Missouri Radiation Regulations; Protection Against Ionizing Radiation (19 CSR 20-10.040), Maximum Permissible Exposure Limits	Radiation	Air	For persons outside a controlled area, the maximum permissible whole-body dose due to sources in or migrating from the controlled area is limited to 2 mrem in any 1 hour, 0.1 rem in any 7 consecutive days, and 0.5 rem in any year. (Note: a controlled area is an area that requires control of access, occupancy, and working conditions for radiation protection purposes; 0.5 rem = 500 mrem.)	Potentially applicable	These requirements may be applicable to protection of the public during implementation of the proposed action.
Radiation Protection of the Public and the Environment (DOE Order 5400.5)	Radiation	Air	The basic dose limit for nonoccupationally exposed individuals is 100 mrem/yr above background, committed effective dose equivalent. Further, all radiation exposures must be reduced to levels as low as is reasonably achievable.	To be considered	Although not promulgated standards, these requirements are derived from such standards and they constitute requirements for protection of the public with which the proposed action will comply.
National Emission Standards for Hazardous Air Pollutants (40 CFR 61), Subpart H, National Emission Standards for Emissions of Radionuclides Other Than Radon from Department of Energy (DOE) Facilities	Radionuclides other than radon-220 and radon-222	Air	Emissions of radionuclides to the ambient air from DOE facilities shall not exceed those amounts that would cause any member of the public in any year an effective dose equivalent of 10 mrem/yr.	Potentially applicable	These requirements may be applicable to protection of the public during implementation of the proposed action because the Weldon Spring site is a DOE facility.
Health and Environmental Protection Standards for Uranium and Thorium Mill Tailings (40 CFR 192)	Radon	Air	Releases of radon from tailings disposal piles must not exceed an average rate of 20 pCi/m^2-s or increase the annual average concentration in air outside the disposal site by more than 0.5 pCi/L.	Not an ARAR	The Weldon Spring site is not a mill tailings site, so these requirements are not applicable; neither are they relevant and appropriate because disposal is beyond the scope of the proposed action. However, these requirements will be addressed as part of the follow-on remedial actions planned for the site.
	Radon decay products	Air	The annual average (or equivalent) radon decay product concentration, including background, in any habitable building must not exceed 0.02 working level (WL) or a maximum of 0.03 WL -- where a WL is any combination of short-lived radon decay products in 1 liter of air, without regard to the degree of equilibrium, that will result in the emission of $1.3 \cdot 10^5$ MeV of alpha energy. (For radon-222 in equilibrium with its decay products, 1 WL = 100 pCi/L.)	Not an ARAR	The Weldon Spring site is not a mill tailings site, so these requirements are not applicable; neither are they relevant and appropriate because no habitable buildings are involved in the proposed action.
	External gamma radiation	Air	The level of external gamma radiation in any occupied or habitable building must not exceed the background level by more than 20 μR/h.	Not an ARAR	The Weldon Spring site is not a mill tailings site, so these requirements are not applicable; neither are they relevant and appropriate because no habitable buildings are involved in the proposed action.

TABLE D.2 (Cont'd)

Potential ARAR	Contaminant	Medium	Requirement	Determination	Remarks
Missouri Radiation Regulations; Protection Against Ionizing Radiation (19 CSR 20-10.040), Maximum Permissible Exposure Limits	Uranium, thorium, radium, and radon	Air	The concentrations of radionuclides in air outside a controlled area (above natural background), averaged over any calendar quarter, should not exceed the following limits:	Potentially applicable	These requirements may be applicable to protection of the public during implementation of the proposed action.

Isotope	Solubility Class	Concentration (μCi/mL)
$U_{natural}$	Soluble	3×10^{-12}
	Insoluble	2×10^{-12}
Uranium-238	Soluble	3×10^{-12}
	Insoluble	5×10^{-12}
Uranium-235	Soluble	2×10^{-11}
	Insoluble	4×10^{-12}
Uranium-234	Soluble	2×10^{-11}
	Insoluble	4×10^{-12}
Thorium-232	Soluble	7×10^{-14}
	Insoluble	4×10^{-13}
Thorium-230	Soluble	8×10^{-14}
	Insoluble	3×10^{-13}
Radium-228	Soluble	2×10^{-12}
	Insoluble	1×10^{-12}
Radium-226	Soluble	1×10^{-12}
	Insoluble	6×10^{-9}
Radon-222		1×10^{-9}
Radon-220		1×10^{-8}

TABLE D.2 (Cont'd)

Potential ARAR	Contaminant	Medium	Requirement	Determination	Remarks
Radiation Protection of the Public and the Environment (DOE Order 5400.5)	Uranium, thorium, and radium	Air	Residual concentrations of radionuclides in air in uncontrolled areas are limited to the following. (For known mixtures of radionuclides, the sum of the ratios of the observed concentration of each radionuclide to its corresponding limit must not exceed 1.0.)	To be considered	Although not promulgated standards, these constitute requirements for protection of the public with which the proposed action will comply.
	Radon-222	Air	The above-background concentration of radon-222 in air above an interim storage facility must not exceed 100 pCi/L at any point, an annual average of 30 pCi/L over the facility, or an annual average of 3 pCi/L at or above any location outside the site. (See also the discussion for DOE Order 5820.2A in Table C.3.)	To be considered	Although not promulgated standards, these constitute requirements for protection of the public with which the proposed action will comply.
	Radon-220 and radon-222	Air	The immersion derived concentration guide for both radon-220 and radon-222 in air in an uncontrolled area is 3 pCi/L.	To be considered	Although not promulgated standards, these constitute requirements for protection of the public with which the proposed action will comply.

Isotope	Derived Concentration Guide[a] (μCi/mL) D	W	Y
Uranium-238	5×10^{-12}	2×10^{-12}	1×10^{-13}
Uranium-235	5×10^{-12}	2×10^{-12}	1×10^{-13}
Uranium-234	4×10^{-12}	2×10^{-12}	9×10^{-14}
Thorium-232	-[b]	7×10^{-15}	1×10^{-14}
Thorium-230	-	4×10^{-14}	5×10^{-14}
Radium-228	-	3×10^{-12}	-
Radium-226	-	1×10^{-12}	-

[a]D, W, and Y represent lung retention classes; removal half-times assigned to the compounds with classes D, W, and Y are 0.5, 50, and 500 days, respectively. Exposure conditions assume an inhalation rate of 8,400 m^3 of air per year (based on an exposure over 24 hours per day, 365 days per year).

[b]A hyphen means no limit has been established.

TABLE D.2 (Cont'd)

Potential ARAR	Contaminant	Medium	Requirement	Determination	Remarks
Occupational Safety and Health Administration Standards; Occupational Health and Environmental Control (29 CFR 1910; 1910.96), Subpart G, Ionizing Radiation	Radiation	Any	The dose per calendar quarter resulting from exposure to radiation in a restricted area from sources in that area is limited to the following: Part of Body — Dose (rem) Whole body: head and trunk; active blood-forming organs; lens of eye; or gonads — 1 1/4 Hands and forearms; feet and ankles — 18 3/4 Skin of whole body — 7 1/2 The occupational exposure of an individual younger than 18 is restricted to 10% of those limits; the whole-body dose to a worker may not exceed 3 rem in a calendar quarter, and when added to the cumulative occupational dose may not exceed 5(N-18) rem, where N is the age of the exposed individual.	Potentially applicable	These requirements may be applicable to worker protection during implementation of the proposed action.
Missouri Radiation Regulations; Protection Against Ionizing Radiation (19 CSR 20-10.040), Maximum Permissible Exposure Limits	Radiation	Any	Limits for occupational doses from ionizing radiation in a controlled area are as follows: Part of Body — Maximum Dose in Any Calendar Year (rem) — Maximum Dose in Any Calendar Quarter (rem) Whole body: head and trunk; major portion of bone marrow; gonads; or lens of eye — 5 — 3 Hands and forearms; feet and ankles — 75 — 25 Skin of large body area — 30 — 10 Also, the whole-body dose added to the cumulative occupational dose must not exceed 5(N-18) rem, where N is the age of the exposed individual.	Potentially applicable	These requirements may be applicable to worker protection during implementation of the proposed action.

TABLE D.2 (Cont'd)

Potential ARAR	Contaminant	Medium	Requirement	Determination	Remarks
Missouri Radiation Regulations; Protection Against Ionizing Radiation (19 CSR 20-10.050), Personnel Monitoring and Radiation Surveys	Radiation	Any	Personnel monitoring and radiation surveys are required for each worker for whom there is any reasonable possibility of receiving a weekly dose from all radiation exceeding 50 mrem, taking into consideration the use of protective gloves and radiation-limiting devices. An exemption from routine monitoring may be granted under certain conditions.	Potentially applicable	These requirements may be applicable to worker protection during implementation of the proposed action.
Radiation Protection for Occupational Workers (DOE Order 5480.11)	Radiation	Any	The effective dose equivalent received by any member of the public entering a controlled area is limited to 100 mrem/yr. Limiting values for the assessed dose from exposure of workers to radiation are as follows. (These values represent maximum limits; it is DOE policy to maintain radiation exposures as far below these limits as is reasonably achievable.)	To be considered	Although not promulgated standards, these constitute requirements for protection from radionuclide emissions in a controlled area with which the proposed action will comply.

Radiation Effect	Annual Dose Equivalent (rem)
Stochastic effects	5[a]
Nonstochastic effects	
Lens of eye	15
Organ, extremity, or tissue including skin of whole body	50
Unborn child Entire gestation period	0.5

[a]Annual effective dose equivalent.

TABLE D.2 (Cont'd)

Potential ARAR	Contaminant	Medium	Requirement	Determination	Remarks
Occupational Safety and Health Administration Standards; Occupational Health and Environmental Control (29 CFR 1910; 1910.96), Subpart G, Ionizing Radiation	Uranium, thorium, radium, and radon	Air	Within a restricted area, airborne radioactive material (averaged over a 40-hour work week of seven consecutive days) should not exceed the following limits. (For hours of exposure less than or greater than 40, the limits are proportionately increased or decreased, respectively.)	Potentially applicable	These requirements may be applicable to worker protection during implementation of the proposed action.

Isotope	Solubility Class	Concentration (μCi/mL)
$U_{natural}$	Soluble	5×10^{-12}
	Insoluble	5×10^{-12}
Uranium-238	Soluble	3×10^{-12}
	Insoluble	5×10^{-12}
Uranium-235	Soluble	2×10^{-11}
	Insoluble	4×10^{-12}
Uranium-234	Soluble	2×10^{-11}
	Insoluble	4×10^{-12}
Thorium-232	Soluble	1×10^{-12}
	Insoluble	1×10^{-12}
Thorium-230	Soluble	8×10^{-14}
	Insoluble	3×10^{-13}
Radium-228	Soluble	2×10^{-12}
	Insoluble	1×10^{-12}
Radium-226	Soluble	3×10^{-12}
	Insoluble	2×10^{-12}
Radon-222[a]		3×10^{-9}
Radon-220		1×10^{-8}

[a]Limit is appropriate for radon-222 combined with its short-lived decay products and may be replaced by 1/30 WL; the limit in restricted areas may be based on an annual average.

For mixtures of radionuclides, the sum of the ratios of the quantity present to the specific limit must not exceed 1. For uranium, chemical toxicity may be the limiting factor for soluble mixtures of uranium-238, uranium-235, and uranium-234 in air; if the percent by weight of uranium-235 is less than 5, the concentration limit for uranium is 0.007 mg/m^3 inhaled air.

TABLE D.2 (Cont'd)

Potential ARAR	Contaminant	Medium	Requirement	Determination	Remarks
Missouri Radiation Regulations; Protection Against Ionizing Radiation (19 CSR 20-10.040), Maximum Permissible Exposure Limits	Uranium, thorium, radium, and radon	Air	Concentrations of radionuclides in air, averaged over any calendar quarter, should not exceed the following limits. (Limits apply to exposure in a controlled area and are based on a work week of 40 hours; for longer work weeks, the values must be adjusted downward.)	Potentially applicable	These requirements may be applicable to worker protection during implementation of the proposed action.

Isotope	Solubility Class	Concentration (μCi/mL)
$U_{natural}$	Soluble	7×10^{-11}
	Insoluble	6×10^{-11}
Uranium-238	Soluble	7×10^{-11}
	Insoluble	1×10^{-10}
Uranium-235	Soluble	5×10^{-10}
	Insoluble	1×10^{-10}
Uranium-234	Soluble	6×10^{-10}
	Insoluble	1×10^{-10}
Thorium-232	Soluble	2×10^{-12}
	Insoluble	1×10^{-11}
Thorium-230	Soluble	2×10^{-12}
	Insoluble	1×10^{-11}
Radium-228	Soluble	7×10^{-11}
	Insoluble	4×10^{-11}
Radium-226	Soluble	3×10^{-11}
	Insoluble	2×10^{-7}
Radon-222		3×10^{-8}
Radon-220		3×10^{-7}

TABLE D.2 (Cont'd)

Potential ARAR	Contaminant	Medium	Requirement	Determination	Remarks
Missouri Radiation Regulations; Protection Against Ionizing Radiation (19 CSR 20-10.040), Maximum Permissible Exposure Limits	Uranium, thorium, and radium	Water	Concentrations of radionuclides in water, averaged over any calendar quarter, should not exceed the following limits. (Limits apply to exposure in a controlled area and are based on a work week of 40 hours; for longer work weeks, the values must be adjusted downward.)	Potentially applicable	These requirements may be applicable to worker protection during implementation of the proposed action.

Isotope	Solubility Class	Concentration (μCi/mL)
$U_{natural}$	Soluble	2×10^{-5}
	Insoluble	2×10^{-5}
Uranium-238	Soluble	4×10^{-5}
	Insoluble	4×10^{-5}
Uranium-235	Soluble	3×10^{-5}
	Insoluble	3×10^{-5}
Uranium-234	Soluble	3×10^{-5}
	Insoluble	3×10^{-5}
Thorium-232	Soluble	2×10^{-6}
	Insoluble	4×10^{-5}
Thorium-230	Soluble	2×10^{-6}
	Insoluble	3×10^{-5}
Radium-228	Soluble	3×10^{-8}
	Insoluble	3×10^{-5}
Radium-236	Soluble	1×10^{-6}
	Insoluble	3×10^{-5}

TABLE D.2 (Cont'd)

Potential ARAR	Contaminant	Medium	Requirement	Determination	Remarks
Radiation Protection for Occupational Workers (DOE Order 5480.11)	Uranium, thorium, radium, and radon	Air	Occupational exposure limits for specific radionuclides in air are as follows. (Values for radon isotopes assume 100% equilibrium with the short-lived decay products; these values may be replaced by 1 WL for radon-220 and 1/3 WL for radon-222.)	To be considered	Although not promulgated standards, these constitute requirements for worker protection with which the proposed action will comply.

Isotope	Derived Air Concentrations[a] (μCi/mL) D	W	Y
Uranium-238	6×10^{-10}	3×10^{-10}	2×10^{-11}
Uranium-235	6×10^{-10}	3×10^{-10}	2×10^{-11}
Uranium-234	5×10^{-10}	3×10^{-10}	2×10^{-11}
Thorium-232	-[b]	5×10^{-13}	1×10^{-12}
Thorium-230	-	3×10^{-12}	7×10^{-12}
Radium-228	-	5×10^{-10}	-
Radium-226	-	3×10^{-10}	-
Radon-222	3×10^{-8}	-	-
Radon-220	8×10^{-9}	-	-

[a]D, W, and Y represent lung retention classes; removal half-times assigned to the compounds with classes D, W, and Y are 0.5, 50, and 500 days, respectively. Exposure conditions assume an inhalation rate of 2,400 m^3 air per year (based on an exposure over 40 hours per week, 50 weeks per year).

[b]A hyphen means no limit has been established.

TABLE D.2 (Cont'd)

Potential ARAR	Contaminant	Medium	Requirement	Determination	Remarks
Clean Air Act, as amended (42 USC 7401-7642); National Primary and Secondary Ambient Air Quality Standards (40 CFR 50)	Particulate matter	Air	For a major stationary source (see 40 CFR 52.2(b)(1)(i)(a)) that emits >250 tons/year of any regulated pollutant or >100 tons/year of a regulated pollutant for which the area is designated as non-attainment, particulate matter less than 10 μm in diameter (PM-10) should not exceed a 24-hour average concentration of 150 $\mu g/m^3$ or an annual arithmetic mean of 50 $\mu g/m^3$.	Potentially relevant and appropriate	Although not directly applicable, these requirements may be relevant and appropriate to the control of particulate emissions that could result from implementation of the proposed action (e.g., during construction activities).
Missouri Air Conservation Law; Public Health and Welfare (RSMo. Title 12, 203.055), Commission may adopt rules for compliance with federal law -- suspension, reinstatement	Any regulated under federal Clean Air Act	Air	Standards and guidelines promulgated to ensure that Missouri is in compliance with the Clean Air Act are not to be any stricter than those required under that act (see related discussion of 40 CFR 50).	Potentially relevant and appropriate	Although not directly applicable, these requirements may be relevant and appropriate to the control of emissions that could result from implementation of the proposed action (e.g., during construction activities).
Missouri Air Quality Standards; Air Quality Standards, Definitions, Sampling and Reference Methods, and Air Pollution Control Regulations for the State of Missouri (10 CSR 10-6.010), Ambient Air Quality	Particulate matter (PM-10)	Air	Concentrations of PM-10 are limited to an annual arithmetic mean of 50 $\mu g/m^3$ and a 24-hour average of 150 $\mu g/m^3$. (These Missouri regulations cover the St. Louis metropolitan area, which includes the geographic areas of St. Charles County.)	Potentially relevant and appropriate	Although not directly applicable, these requirements may be relevant and appropriate to the control of particulate emissions that could result from implementation of the proposed action (e.g., during construction activities).
Missouri Air Pollution Control Regulations; Air Quality Standards and Air Pollution Control Regulations for the St. Louis Metropolitan Area (10 CSR 10-5.050), Restriction of Emission of Particulate Matter from Industrial Processes	Particulate matter	Air	Particulate matter from any industrial source may not exceed a concentration of 0.30 grain/ft^3 of exhaust gas; certain activities are exempted (e.g., grinding, crushing, and classifying operations at a rock quarry).	Potentially relevant and appropriate	Although not applicable because no industrial processes are involved in the proposed action, these requirements may be considered relevant and appropriate as they relate to the control of particulate emissions that could be generated during implementation.
Missouri Air Pollution Control Regulations; Air Quality Standards and Air Pollution Control Regulations for the St. Louis Metropolitan Area (10 CSR 10-5.090), Restriction of Emission of Visible Air Contaminants	Particulate matter	Air	Emissions of particulate matter (<25 lb/h) from any single source, not including uncombined water, may not be darker than the shade or density designated as No. 2 on the Ringelmann Chart, or 40% opacity.	Potentially relevant and appropriate	Although not directly applicable, these requirements may be relevant and appropriate to the control of particulate emissions that could result from implementation of the proposed action.

TABLE D.2 (Cont'd)

Potential ARAR	Contaminant	Medium	Requirement	Determination	Remarks
Missouri Air Pollution Control Regulations; Air Quality Standards and Air Pollution Control Regulations for the St. Louis Metropolitan Area (10 CSR 10-5.100), Preventing Particulate Matter from Becoming Airborne	Particulate matter	Air	No person may permit the handling, transport, or storage of any material in a way that allows unnecessary amounts of fugitive particulate matter to become airborne and that results in at least one complaint being filed. To prevent particulate matter from becoming airborne during construction, use, repair, or demolition of a road, driveway, or open area, the following measures may be required: paving or frequent cleaning of roads, applying dust-free surfaces or water, and planting and maintaining a vegetative ground cover. (Unpaved public roads in unincorporated areas that are in compliance with particulate matter standards are excluded.)	Potentially relevant and appropriate	Although not directly applicable, these requirements may be relevant and appropriate to the control of particulate emissions that could result from implementation of the proposed action (e.g., during construction activities).
Missouri Air Pollution Control Regulations; Air Quality Standards and Air Pollution Control Regulations for the St. Louis Metropolitan Area (10 CSR 10-5.180), Emission of Visible Air Contaminants from Internal Combustion Engines	Particulate matter	Air	Visible air contaminants (other than uncombined water) may not be released from an internal combustion engine for more than 10 seconds at any one time.	Potentially applicable	These requirements may be applicable to particulates released from any internal combustion engines used during the proposed action.
National Emission Standards for Hazardous Air Pollutants (40 CFR 61), Subpart M, National Emission Standard for Asbestos	Asbestos	Air	Warning signs must be posted, and discharge of visible emissions must not occur during the collection, processing, packaging, transporting, or deposition of any asbestos-containing material.	Potentially applicable	If the proposed action results in asbestos emissions (e.g., during the demolition of Building 302), this requirement may be applicable to protection of the public during implementation.
Toxic Substances Control Act, as amended (15 USC 2607-2629; PL 94-469 et seq.); Asbestos (40 CFR 763), Subpart G, Asbestos Abatement Projects	Asbestos	Air	Programs for worker training and protection (via clothing and equipment) must be implemented, and the permissible exposure limit for asbestos is 0.2 fiber/cm^3 of air as an 8-hour time-weighted average.	Potentially applicable	If the proposed action results in asbestos emissions (e.g., during the demolition of Building 302), this requirement may be applicable to worker protection during implementation.
Occupational Safety and Health Administration Standards; Occupational Health and Environmental Control (29 CFR 1910; 1910.1001), Subpart G, Asbestos, Tremolite, Anthophyllite, and Actinolite	Asbestos	Air	Various asbestos-management activities are required for worker protection, including monitoring, timely response to releases, and the use of high-efficiency-particulate-air (HEPA)-filtered equipment for vacuuming. The permissible occupational exposure limit for asbestos as an 8-hour time-weighted average is 0.2 fiber/cm^3 of air.	Potentially applicable	If the proposed action results in asbestos emissions (e.g., during the demolition of Building 302), this requirement may be applicable to worker protection during implementation.

TABLE D.2 (Cont'd)

Potential ARAR	Contaminant	Medium	Requirement	Determination	Remarks
Occupational Safety and Health Administration Construction Industry Standards (29 CFR 1926)	Asbestos	Air	Worker health and safety standards include a limit for occupational exposure to asbestos of 0.2 fiber/cm^3 of air as an 8-hour time-weighted average, with an action level of 0.1 fiber/cm^3 and a short-term (30-minute) limit of 1 fiber/cm^3 of air (fibers >5 μm).	Potentially applicable	If the proposed action results in asbestos emissions (e.g., during the demolition of Building 302), this requirement may be applicable to worker protection during implementation.
Occupational Safety and Health Administration Standards; Occupational Health and Environmental Control (29 CFR 1910; 1910.95), Subpart G, Occupational Noise Exposure	Noise	Air	The permissible occupational exposure level for noise is 90 dBA (slow response) for an 8-hour day; with decreasing times of exposure, the levels increase to 115 dBA per 1/4-hour day.	Potentially applicable	These requirements may be applicable to worker protection during implementation of the proposed action.

TABLE D.3 Potential Action-Specific Requirements

Potential ARAR	Action	Requirement	Preliminary Determination	Remarks
Missouri Effluent Limitation Standards, Effluent Regulations (10 CSR 20-7.015(B)(2))	Water treatment	Wastewater treatment facilities shall meet the applicable control technology currently effective (as published by the EPA in 40 CFR 405-471, as revised on July 1, 1987) or that will become effective during the life of the permit.	Potentially applicable	This requirement may be applicable to the proposed action, but the standards in 40 CFR 405-471 are not directly applicable; specific limitations for this permit will be established by the state of Missouri.
Missouri Effluent Limitation Standards, General Conditions (10 CSR 20-7.015(9)(B))	Dilution	Dilution of treated wastewater with cooling water or other less contaminated water to lower the effluent concentration to required limits is not an acceptable means of treatment.	Not an ARAR	This type of treatment is not a component of the proposed action.
Missouri Effluent Limitation Standards (10 CSR 20-7.015(9)(E))	Bypassing	Any bypass or shutdown of a wastewater treatment facility that results in a violation of permit limits or conditions is prohibited except (a) where unavoidable to prevent loss of life, personal injury, or property damages; (b) where unavoidable excessive storm drainage or runoff could damage facilities necessary for compliance with the effluent limitation; (c) where maintenance is necessary to ensure efficient operation and alternative measures have been taken to maintain effluent quality during the maintenance period.	Potentially applicable	This requirement may be applicable to the proposed action and would be addressed under the permit that would be issued by the state of Missouri for the proposed action.
Noise Control Act, as Amended; Noise Pollution and Abatement Act	Construction and operation	The public must be protected from noises (e.g., that could result from construction and operation activities) that jeopardize health or welfare.	Potentially applicable	Because equipment and vehicles would be involved in certain aspects of the proposed action (e.g., construction and operation), all pertinent requirements of the act would be followed.
Occupational Safety and Health Administration Standards for Hazardous Waste Operations and Emergency Response (29 CFR 1910)	Waste management	General worker protection requirements are established, as are requirements for worker training and the development of an emergency response plan and a safety and health program for employees. In addition, procedures are established for hazardous waste operations -- including decontamination and drum/container handling (e.g., for radioactive waste, asbestos, and PCBs).	Potentially applicable	Certain substantive components of these requirements may be applicable to worker protection during implementation of the proposed action. Emergency response plans and safety and health plans have been developed for response actions at the site.
Radioactive Waste Management (DOE Order 5820.2A)	Waste management	External exposure to radioactive waste (including releases) should not result in an effective dose equivalent of >25 mrem/yr to any member of the public; releases to the atmosphere are to meet the requirements of 40 CFR 61 (see related discussion in Table C.2); and an environmental monitoring program must be implemented to address compliance with performance standards.	To be considered	Although not promulgated standards, these constitute requirements with which the proposed action will comply. An environmental monitoring program has been developed for implementation.

TABLE D.3 (Cont'd)

Potential ARAR	Action	Requirement	Preliminary Determination	Remarks
Radiation Protection of the Public and the Environment (DOE Order 5400.5)	Interim waste storage and management	The control and stabilization features of a storage facility should be designed to ensure an effective life of 50 years, with a minimum life of at least 25 years, to the extent reasonably achievable; site access controls should be designed to ensure an effective life of at least 25 years, to the extent reasonable; and periodic monitoring, shielding, access restrictions, and safety measures must be implemented to control the migration of radioactive material, as appropriate.	To be considered	Although not promulgated standards, these constitute requirements with which the storage of process residues from the water treatment plant will comply.
Missouri Radiation Regulations; Protection Against Ionizing Radiation (19 CSR 20-10.080), Control of Radioactive Contamination	Waste management	All work must be carried out under conditions that minimize the potential spread of radioactive material that could result in the exposure of any person above any limit specified in 19 CSR 20-10.040 (see related discussion in Table C.2). Clothing and other personal contamination should be monitored and removed according to procedures established by a qualified expert; any material contaminated to the degree that a person could be exposed to radiation above any limit specified in 19 CSR 20-10.040 should be retained on-site until it can be decontaminated or disposed of according to procedures established by a qualified expert.	Potentially applicable	These requirements may be applicable to the management of radioactive wastes resulting from implementation of the proposed action.
Toxic Substances Control Act, as amended (15 USC 2607-2629; PL 94-499, et seq.); Polychlorinated Biphenyls (PCBs) Manufacturing, Processing, Distribution in Commerce, and Use Prohibitions (40 CFR 761), Subpart D, Storage and Disposal	PCB storage	PCB articles or containers with PCB concentrations >50 ppm must be stored for disposal in a facility that meets the requirements of 40 CFR 761.65.	Potentially applicable	Articles or containers with PCB concentrations in excess of 50 ppm are not expected to be associated with the proposed action; however, if such substances were present, the requirement would be applicable.
Missouri Hazardous Substance Rules (10 CSR 24); Missouri Solid Waste Management Law (RSMo. 260.200 to 260.245) and Regulations (10 CSR 80); Missouri Hazardous Waste Management Law (RSMo. 260.350 to 260.552) and Regulations (10 CSR 25)	Waste treatment, storage, and disposal	Various requirements are identified for waste treatment, storage, and disposal facilities.	Not an ARAR	The requirements for treatment and disposal facilities are neither applicable nor relevant and appropriate because treatment and disposal of the process residues from the water treatment plant are beyond the scope of the proposed action. The substantive storage requirements are being addressed for the temporary storage area.

TABLE D.3 (Cont'd)

Potential ARAR	Action	Requirement	Preliminary Determination	Remarks
Solid Waste Disposal Act, as amended (42 USC 6901, et seq.); Solid Wastes (40 CFR 264), Subpart B, General Facility Standards	Waste treatment, storage, or disposal	General requirements are established for facility location and inspection, waste compatibility determination, and worker training. Location requirements include (1) facilities must not be located within 61 m (200 ft) of a fault in which displacement has occurred in Holocene time (i.e., since the end of the Pleistocene) and (2) facilities located in a 100-year floodplain must be constructed, operated, and maintained to prevent washout of any hazardous waste by a 100-year flood.	Not an ARAR	The requirements for treatment and disposal facilities are neither applicable nor relevant and appropriate because treatment and disposal of the process residues from the water treatment plant are beyond the scope of the proposed action. However, these requirements will be addressed as part of the follow-on remedial actions planned for the site. The storage facility for the process wastes would not be located in a 100-year floodplain, so these requirements are neither applicable nor relevant and appropriate.
Solid Waste Disposal Act, as amended (42 USC 6901, et seq.); Solid Wastes (40 CFR 264), Subpart C, Preparedness and Prevention; Subpart D, Contingency Plan and Emergency Procedures	Waste treatment, storage, or disposal	Facilities must be designed, constructed, maintained, and operated to minimize the possibility of a fire, explosion, or any unplanned sudden or nonsudden release of hazardous waste (or constituents) to air, water, or surface water that could threaten human health or the environment. A contingency plan must be in place and emergency procedures must be implemented to minimize releases of hazardous wastes from a facility.	Not an ARAR	The requirements for treatment and disposal facilities are neither applicable nor relevant and appropriate because treatment and disposal of the process residues from the water treatment plant are beyond the scope of the proposed action. However, these requirements will be addressed as part of the follow-on remedial actions planned for the site.
Solid Waste Disposal Act, as amended (42 USC 6901, et seq.); Solid Wastes (40 CFR 264), Subpart E, Manifest System, Recordkeeping, and Reporting; Subpart F, Releases from Solid Waste Management Units; Subpart G, Closure and Post-Closure; Subpart H, Financial Requirements; Subpart K, Surface Impoundments; Subpart M, Land Treatment; Subpart N, Landfills; Subpart O, Incinerators; Subpart P, Thermal Treatment; Subpart X, Miscellaneous Units	Waste treatment, storage, or disposal	Various requirements (e.g., for facility design, operation, and closure, as appropriate) are established for treatment, storage, and disposal of hazardous wastes.	Not an ARAR	The requirements for treatment and disposal facilities are neither applicable nor relevant and appropriate because treatment and disposal are beyond the scope of the proposed action. However, these requirements will be addressed as part of the follow-on remedial actions planned for the site. The substantive storage requirements are being addressed for the temporary storage area.

APPENDIX E:

ENGLISH/METRIC - METRIC/ENGLISH EQUIVALENTS

TABLE E.1 English/Metric Equivalents

Multiply	By	To obtain
acres	0.4047	hectares (ha)
cubic feet (ft^3)	0.02832	cubic meters (m^3)
cubic yards (yd^3)	0.7646	cubic meters (m^3)
degrees Fahrenheit (°F) - 32	0.5555	degrees Celsius (°C)
feet (ft)	0.3048	meters (m)
gallons (gal)	3.785	liters (L)
gallons (gal)	0.003785	cubic meters (m^3)
inches (in.)	2.540	centimeters (cm)
miles (mi)	1.609	kilometers (km)
pounds (lb)	0.4536	kilograms (kg)
short tons (tons)	907.2	kilograms (kg)
short tons (tons)	0.9072	metric tons (t)
square feet (ft^2)	0.09290	square meters (m^2)
square yards (yd^2)	0.8361	square meters (m^2)
square miles (mi^2)	2.590	square kilometers (km^2)
yards (yd)	0.9144	meters (m)

TABLE E.2 Metric/English Equivalents

Multiply	By	To obtain
centimeters (cm)	0.3937	inches (in.)
cubic meters (m^3)	35.31	cubic feet (ft^3)
cubic meters (m^3)	1.308	cubic yards (yd^3)
cubic meters (m^3)	264.2	gallons (gal)
degrees Celsius (°C) + 17.78	1.8	degrees Fahrenheit (°F)
hectares (ha)	2.471	acres
kilograms (kg)	2.205	pounds (lb)
kilograms (kg)	0.001102	short tons (tons)
kilometers (km)	0.6214	miles (mi)
liters (L)	0.2642	gallons (gal)
meters (m)	3.281	feet (ft)
meters (m)	1.094	yards (yd)
metric tons (t)	1.102	short tons (tons)
square kilometers (km^2)	0.3861	square miles (mi^2)
square meters (m^2)	10.76	square feet (ft^2)
square meters (m^2)	1.196	square yards (yd^2)