7194 G-000-104.185

FERNALD ENVIRONMENTAL MANAGEMENT PROJECT - 1995 STACK TEST REPORTS - LAUNDRY CONTAMINATED CLOTHING DRYERS AND THE EAST OLIVER FILTER NASH VACUUM PUMP

09/13/95

C:EC:95-0119
FREMCO USEPA
1000
REPORT

Fernald Environmental
FERMCO
Restoration Management Corporation P.O. Box 398704 Cincinnati, Ohio 45239-8704 (513) 738-6200

September 13, 1995

Fernald Environmental Management Project
Letter No. C:EC:95-0119

Chief, Environmental Review Branch
United States Environmental Protection Agency
John C. Kluczynski Federal Building, 5ME-16
230 South Dearborn Street
Chicago, IL 60604

Dear Sir:

FERNALD ENVIRONMENTAL MANAGEMENT PROJECT - 1995 STACK TEST REPORTS - LAUNDRY CONTAMINATED CLOTHING DRYERS AND THE EAST OLIVER FILTER NASH VACUUM PUMP

Enclosed are the 1995 stack test reports for the periodic confirmatory testing of the Laundry Contaminated Clothing Dryers and the East Oliver Filter Nash Vacuum Pump. Submission of these reports to your office is pursuant to Clean Air Act, paragraph D of the 1986 Federal Facilities Compliance Agreement. The stack test results confirm the estimated low levels of emissions as required by 40 CFR 61.93(b)(4)(i), and also verify that the sources are being operated in compliance with their respective permits.

If you have any questions regarding these stack tests, please call Kip Klee of my staff at (513) 648-5289.

Sincerely,

Terence D. Hagen
Director
Environmental Compliance

TDH:KOK:mhv
Enclosure

c: S. M. Beckman, FERMCO/MS65-2, w/o enclosure
K. O. Klee, FERMCO/MS65-2, w/o enclosure
P. B. Spotts, FERMCO/MS65-2, w/o enclosure
E. P. Skintik, DOE-FN/MS45, w/o enclosure
AR Coordinator / MS 78
File Record Storage Copy 108.14
RTS Files

7194

COMPLIANCE EMISSIONS TEST REPORT DETERMINATION OF PARTICULATE, RADIONUCLIDES, AND TOTAL URANIUM EMISSIONS FROM THE EAST OLIVER FILTER NASH VACUUM PUMP (EMISSION POINT # EP8-013) FERNALD ENVIRONMENTAL RESTORATION MANAGEMENT CORPORATION CINCINNATI, OHIO

HAYDEN ENVIRONMENTAL GROUP, INC.

Health & Safety Division

561 Congress Park Drive, Dayton, Ohio 45459, USA•(513) 438-3010•(800) 282-8043•FAX (513) 438-3020

000002

7194

COMPLIANCE EMISSIONS TEST REPORT DETERMINATION OF PARTICULATE, RADIONUCLIDES, AND TOTAL URANIUM EMISSIONS FROM THE EAST OLIVER FILTER NASH VACUUM PUMP (EMISSION POINT # EP8-013) FERNALD ENVIRONMENTAL RESTORATION MANAGEMENT CORPORATION CINCINNATI, OHIO

prepared for

FERNALD ENVIRONMENTAL RESTORATION MANAGEMENT CORPORATION
P.O. Box 398704
Cincinnati, Ohio 45239-8704

prepared by:

Hayden Environmental Group, Inc.
561 Congress Park Drive
Dayton, Ohio 45459
(513) 438-3010

Written By:
Bruce A. Sarven
Project Manager
Emissions Measurements Division

Reviewed By:
Bert G. Forsyth
Group Leader
Emissions Measurement Division

P.N. A95010
July 13, 1995

000003

HAYDEN
ENVIRONMENTAL GROUP, INC.

Executive Summary

Hayden Environmental Group, Inc. was retained by Fernald Environmental Restoration Management Corporation to determine the particulate, radionuclide, and total uranium emission rates of the East Oliver Filter Nash Vacuum Pump exhaust at their Ross, Ohio facility. The evaluation was performed to demonstrate compliance with Ohio Environmental Protection Agency regulations restricting emissions from stationary sources. Emission samples were collected and analyzed using USEPA Reference Methods for stationary source sampling. The tests were conducted on May 10, 1995. The results of the tests are summarized below:

Summary of East Oliver Filter Nash Vacuum Pump Emissions

Compound	Emission Rate (lb/hr)[a]
Total Particulate	5.00E-03
Total Uranium	4.48E-04

Compound	Emission Rate (pci/hr)[b]
Gross Alpha	570 with 106 std. dev.
Gross Beta	271 with 100 std. dev.

[a] pounds per hour
[b] picocuries per hour

TABLE OF CONTENTS

1.0 Introduction 1

2.0 Process Description 1

3.0 Sampling Site Description 1
Figure 3.1 East Oliver Filter Nash Vacuum Pump Exhaust Sampling Site Detail 2

4.0 Sampling and Analytical Procedures 3
4.1 Measurement Sites (USEPA Method 1) 3
4.2 Velocity and Volumetric Flow Rate (USEPA Method 2) 3
4.3 Dry Molecular Weight (USEPA Method 3) 3
4.4 Moisture (USEPA Method 4) 3
4.5 Particulate (USEPA Method 5) 3
4.6 Radionuclide (USEPA Method 114) 4

Figure 4.1 Particulate Sampling Train 5

5.0 Test Results 6
Table 5.1 Summary of East Oliver Filter Nash Vacuum Pump Exhaust Stack Gas Conditions 7
Table 5.2 Summary of East Oliver Filter Nash Vacuum Pump Exhaust Particulate Emissions 8
Table 5.3 Summary of East Oliver Filter Nash Vacuum Pump Exhaust Total Uranium Emissions 9
Table 5.4 Summary of East Oliver Filter Nash Vacuum Pump Exhaust Alpha Emissions 10
Table 5.5 Summary of East Oliver Filter Nash Vacuum Pump Exhaust Beta Emissions 11

6.0 Discussion and Interpretation 12

APPENDIX A Field Data Sheets
APPENDIX B Laboratory Data
APPENDIX C Calculations
APPENDIX D Quality Assurance Procedures and Results

1.0 Introduction

Hayden Environmental Group, Inc. was retained by Fernald Environmental Restoration Management Corporation (FERMCO) to perform a compliance particulate, radionuclide, and total uranium emissions evaluation on the East Oliver Filter Nash Vacuum Pump exhaust at their Ross, Ohio facility. The evaluation was performed on May 10, 1995. A single test run was conducted using USEPA Reference Methods 1, 2, 3, 4, 5, and 114. Mr. Tim Miller of FERMCO coordinated the test schedule with plant operations. The emission tests were performed by the Hayden test team of Mr. Bruce Sarven and Mr. Bert Forsyth. The emission samples were analyzed by DataChem Laboratories located in Salt Lake City, Utah.

2.0 Process Description

The East Oliver Filter is used to filter sump liquor or sump water. The soap liquor and slop water feeds are neutralized with lime then passed through the Oliver Filter at a rate of 2,000 gallons per hour. The oliver filter is a rotary vacuum filter precoated with dicalite (diatomaceous earth).

The Nash vacuum pump produces the vacuum that moves the feed liquor or water through the Oliver filter. The vacuum pump is equipped with moisture separation systems which reduce the amount of water vapor discharged to the atmosphere. The discharged water vapor can contain radioactive (primarily uranium) compounds, lime, and other miscellaneous solids filtered from the liquor/slurry feed.

3.0 Sampling Site Description

The emissions from the East Oliver Filter are vented through a 10 inch diameter circular stack. Two sampling ports were located at 90° angles from each other. The sampling ports were located 84 inches or 8.4 stack diameters downstream from the last flow disturbance (elbow) and 37 inches or 3.7 stack diameters upstream from the next flow disturbance (elbow). A drawing of the sampling site is provided in Figure 3.1.

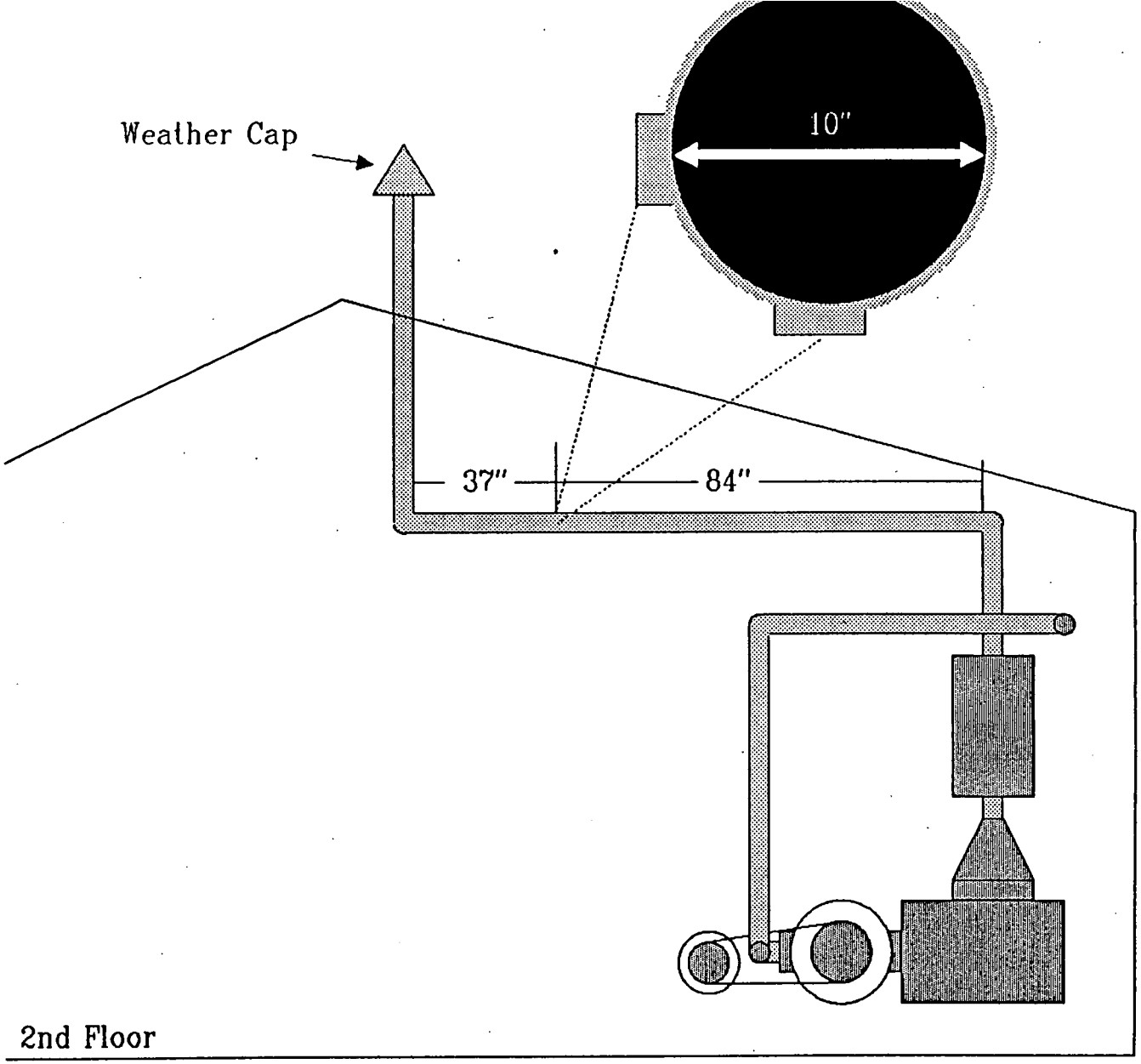

Figure 3.1 Sample Site Detail

HAYDEN
ENVIRONMENTAL GROUP, INC.

000002

4194

4.0 Sampling and Analytical Procedures

The sampling and analytical procedures conformed to the most recent revisions of USEPA Reference Methods for stationary sources. Specifically, USEPA Reference Methods 1, 2, 3, 4, 5, and 114 were used. A brief description of each procedure is included below:

4.1 Measurement Sites (USEPA Method 1A)

The location of measurement sites and the number of traverse points were determined using USEPA Reference Method 1A, "Sample and Velocity Traverses for Stationary Sources with Small Stacks or Ducts."

4.2 Velocities and Volumetric Flow Rates (USEPA Method 2C)

The stack gas velocity and volumetric flow rates were determined using USEPA Reference Method 2, "Determination of Stack Gas Velocity and Volumetric Flow Rate in Small Stack or Ducts (Standard Pitot Tube)." The stack gas velocity was measured on a Dwyer oil filled manometer using a calibrated S-type pitot tube. The stack gas temperature was measured with a calibrated type "K" thermocouple and Omega digital temperature readout.

4.3 Dry Molecular Weight (USEPA Method 3)

The stack gas dry molecular weight was determined using USEPA Reference Method 3, "Gas Analysis for Carbon Dioxide, Oxygen, Excess Air, and Dry Molecular Weight." Several grab samples were collected and analyzed during each test with Fyrite combustion gas analyzers which directly measure concentrations of O_2 and CO_2.

4.4 Moisture (USEPA Method 4)

The stack gas moisture content was determined using USEPA Reference Method 4, "Determination of Moisture Content in Stack Gases." The samples were collected in a series of chilled impingers. The moisture collected within the impingers was analyzed by gravimetric analysis.

4.5 Particulate Matter (USEPA Method 5C)

The particulate emissions were determined using USEPA Reference Method 5C, "Determination of Particulate Emissions from Stationary Sources with Small Stacks or Ducts." The samples were collected isokinetically from a single representative point through a heated glass lined probe, a heated (248°+/-25°) tared glass fiber filter, and a series of cooled impingers (to condense the moisture). The nozzle, probe, and glassware before the filter was rinsed and brushed with acetone. The acetone rinse was placed in a tare-weighed beaker. The contents of the impingers were collected and all of the glassware behind the filter was rinsed with deionized water. The DI rinse was collected in a separate tare-weighed beaker. The acetone and DI water were both evaporated at temperatures below their boiling points. The filter and acetone residue were analyzed by gravimetric analysis to determine the filterable particulate mass collected. The DI water residue was analyzed by gravimetric analysis to determine the condensible particulate mass collected. The total particulate was obtained by adding the filterable and condensible particulate emission rates. A drawing of the particulate sampling train is provided in Figure 4.1.

4.6 **Radionuclide and Total Uranium (USEPA M-114)**

The Radionuclide and total uranium emissions were determined using USEPA Reference Method 114, "Test Methods for Measuring Radionuclide Emissions from Stationary Sources." The radionuclide analysis was performed on the total particulate. The uranium was dissolved, oxidized to the hexavalent state, and extracted using a suitable solvent. The samples were analyzed for total uranium by colorimetry (Method A-5) and laser phosphoremetry. The total gross alpha activity was determined using an alpha counter (Method A-4). The total gross beta activity was determined using a beta counter (Method B-4). The total gamma isotopic activity was determined using a high resolution gamma detector (Method G-1).

The Hayden Environmental Group Inc. Air Sampling Quality Assurance Program includes procedures for equipment calibration that follow USEPA and manufacturers guidelines, use of and strict adherence to standard published procedures, and traceability protocols for the recording and calculation of data.

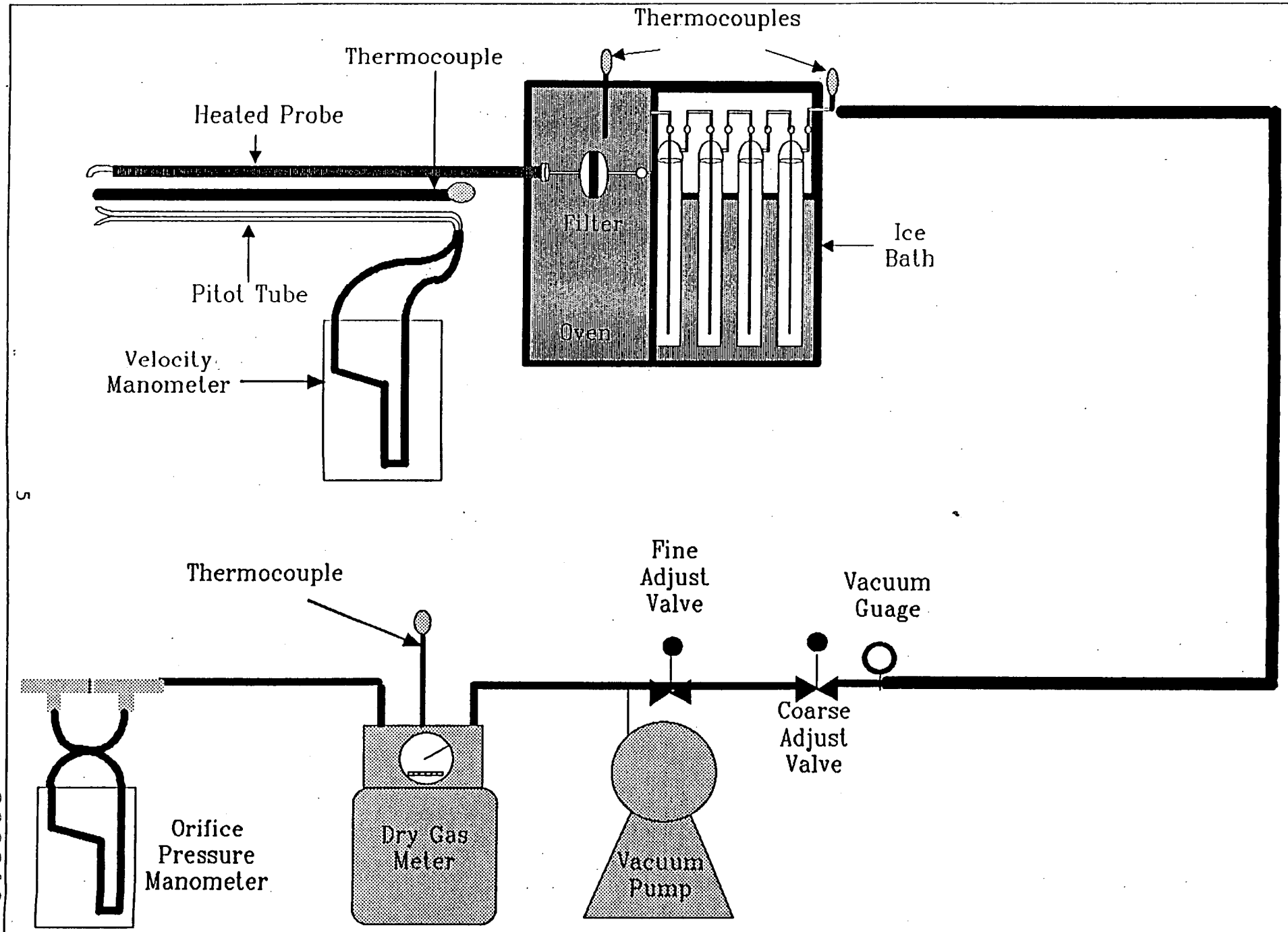

Figure 4.1 Particulate Sampling Train

HAYDEN
ENVIRONMENTAL GROUP, INC.

000010

7194

5.0 Test Results

Table 5.1 summarizes the East Oliver Filter Nash Vacuum Pump exhaust stack gas conditions. The stack gas velocity averaged 12.8 feet per second (fps). The volumetric flow rate averaged 418 actual cubic feet per minute (acfm) or 351 dry standard cubic feet per minute (dscfm) at 124°F. The stack gas concentration of oxygen and carbon dioxide were 21.0% and 0.0%, respectively.

Table 5.2 summarizes the East Oliver Filter Nash Vacuum Pump exhaust particulate emissions. The average stack gas filterable particulate concentration was 7.87E-04 grains per dry standard cubic feet (gr/dscf) or 1.12E-07 pounds per dry standard cubic foot (lb/dscf). The filterable particulate emission rate averaged 2.37E-03 pounds per hour (lb/hr). The average stack gas condensible particulate concentration was 8.72E-04 gr/dscf or 1.25E-07 lb/dscf. The condensible particulate emission rate averaged 2.63E-03 lb/hr. The average total particulate emission rate was 5.00E-03 lb/hr.

Table 5.3 summarizes the East Oliver Filter Nash Vacuum Pump exhaust total uranium emissions. The average stack gas uranium concentration was 3.40E-01 milligrams per cubic meter (mg/m^3) or 2.12E-08 lb/dscf. The uranium emission rate averaged 4.48E-04 lb/hr.

Table 5.4 summarizes the East Oliver Filter Nash Vacuum Pump exhaust gross alpha radionuclide emissions. The average stack gas gross alpha concentration was 2.70E-02 picocuries per dry standard cubic foot (ρci/dscf) with a standard deviation of 5.02E-03 ρci/dscf. The gross alpha emission rate averaged 570 picocurries per hour (ρci/hr) with a standard deviation of 106 ρci/hr.

Table 5.5 summarizes the East Oliver Filter Nash Vacuum Pump exhaust gross beta radionuclide emissions. The average stack gas gross beta concentration was 1.29E-02 ρci/dscf with a standard deviation of 4.76E-03 ρci/dscf. The gross beta emission rate averaged 271 ρci/hr with a standard deviation of 100 ρci/hr.

FERMCO

Table 5.1 Summary of East Oliver Filter Nash Vacuum Pump Exhaust Stack Gas Conditions

Run No.	Date Time	Velocity (fps)[a]	Air Flow (acfm)[b]	Air Flow (dscfm)[c]	Temp. (°F)[d]	Moisture (%)	Oxygen (%)	Carbon Dioxide (%)
EO-1	5/10/95 0924-1433	12.8	418	351	124	5.0[e]	21.0	0.0

[a] feet per second
[b] actual cubic feet per minute
[c] dry standard cubic feet per minute
[d] degrees Fahrenheit
[e] The moisture was estimated to be 5.0%. An explanation is provided in Section 6.0 "Discussion and Interpretation."

000042

7194

FERMCO

Table 5.2 Summary of East Oliver Filter Nash Vacuum Pump Exhaust Particulate Emissions

Run No.	Date Time	Filterable Particulate			Condensible Particulate			Total Particulate Emission Rate (lb/hr)[c]
		Concentration		Emission Rate (lb/hr)[c]	Concentration		Emission Rate (lb/hr)[c]	
		(gr/dscf)[a]	(lb/dscf)[b]		(gr/dscf)[a]	(lb/dscf)[b]		
EO-1	5/10/95 0924-1433	7.87E-04	1.12E-07	2.37E-03	8.72E-04	1.25E-07	2.63E-03	5.00E-03

[a] grains per dry standard cubic foot
[b] pounds per dry standard cubic foot
[c] pounds per hour

000013

HAYDEN ENVIRONMENTAL GROUP, INC.

2194

FERMCO

Table 5.3 Summary of East Oliver Filter Nash Vacuum Pump Exhaust Total Uranium Emissions

Run No.	Date Time	Concentration		Emission Rate (lb/hr)[c]
		(mg/m^3)[a]	(lb/dscf)[b]	
EO-1	5/10/95 0924-1433	3.40E-01	2.12E-08	4.48E-04

[a] milligrams per cubic meter
[b] pounds per dry standard cubic foot
[c] pounds per hour

000014

HAYDEN ENVIRONMENTAL GROUP, INC.

2194

Table 5.4 Summary of East Oliver Filter Nash Vacuum Pump Exhaust Gross Alpha Emissions

Run No.	Date Time	Concentration			Emission Rate		
		Measured Concentration (ρci/dscf)[a]	Standard Deviation (ρci/dscf)[a]	Concentration Range (ρci/dscf)[a]	Measured Emission Rate (ρci/hr)[b]	Standard Deviation (ρci/hr)[b]	Emission Rate Range (ρci/hr)[b]
EO-1	5/10/95 0924-1433	1.29E-02	5.02E-03	7.88E-03 to 1.79E-02	570	106	464 to 676

[a] picocuries per dry standard cubic foot
[c] picocuries per hour

000015

2194

FERMCO

Table 5.5 Summary of East Oliver Filter Nash Vacuum Pump Exhaust Gross Beta Emissions

Run No.	Date Time	Concentration			Emission Rate		
		Measured Concentration (ρci/dscf)[a]	Standard Deviation (ρci/dscf)[a]	Concentration Range (ρci/dscf)[a]	Measured Emission Rate (ρci/hr)[b]	Standard Deviation (ρci/hr)[b]	Emission Rate Range (ρci/hr)[b]
EO-1	5/10/95 0924-1433	1.29E-02	4.76E-03	8.14E-03 to 1.77E-02	271	100	171 to 371

[a] picocuries per dry standard cubic foot
[c] picocuries per hour

000046

HAYDEN ENVIRONMENTAL GROUP, INC.

7194

6.0 Discussion and Interpretation

One of the sampling ports was not accessible during the test. The sampling port was sealed shut and could not be opened. Therefore the air flow measurements were performed on only one sampling port.

The filtration system shut down before a post-test air flow measurement could be performed. Both a pre-test and a post-test air flow are required to be performed and averaged together for USEPA Reference Method 5C calculations. Since the process is considered to be steady state and the post-test air flows were not representative, the pre-test air flow was used to calculate the air flows and emission rates.

The silica gel impinger was broken sometime between the end of the sample run and the beginning of the sample recoveries. The broken impinger had no effect on the integrity of the sample, However, it made calculating a stack gas moisture impossible. Therefore an estimate of the stack gas moisture was used to calculate the air flows.

The negative weight was recorded for the filter catch. It is not uncommon for the net weight change of the particulate filter to be negative on sources with very low particulate loadings. The filter edge is typically partially damaged by normal use in a Method 5 sampling train. When the filter is recovered, the loose filter material from the edge of the filter holder and frit are also recovered with the filter to the extent possible. Following recovery of the filter, the filter holder and frit are brushed and rinsed with acetone to recover any particulate and filter residue that could not be recovered by physical means. This portion of the particulate is included in the acetone rinse fraction. The portion of filter material not recovered with the filter fraction is reflected in the weight gain of the acetone rinse. The sample from this test run showed a positive <u>total</u> particulate weight gain.

APPENDIX A

FIELD DATA

METHOD 1 TRAVERSE POINT LOCATION FOR CIRCULAR DUCTS

Client: FEAMCO PN: A2E910 Date: 5/10/95
Source: EAST OLIVER PUMP Site: EXHAUST

INSIDE OF FAR WALL TO OUTSIDE OF NIPPLE: ~17"

INSIDE OF NEAR WALL TO OUTSIDE OF NIPPLE: ~3'

STACK I.D.: 10"

NEAREST UPSTREAM DISTURBANCE: 37" (3.7 DIA)

NEAREST DOWNSTREAM DISTURBANCE: ~64' (6.4 DIA)

TRAVERSE POINT NUMBER	FRACTION OF STACK I.D. (Y)	STACK DIAMETER (D)	(Y) x (D)	NIPPLE DEPTH	TRAVERSE POINT LOCATION
1	0.067	10	0.670	NA	0.670
2	0.250	↓	2.50	↓	2.50
3	0.750	↓	7.50	↓	7.50
4	0.933	↓	9.33	↓	9.33

HAYDEN ENVIRONMENTAL GROUP, INC.

EMISSION TESTING FIELD DATA

Client: FERMCO Run #: EO-1 Date: 5/10/95 Page 2 of 2

Traverse Point Number	Sampling Time (min)	Clock Time (hr)	Meter Reading (cu ft.)	Velocity Pressure ΔP ("H2O)	Orifice Pressure ΔH@ ("H2O) Desired	Orifice Pressure ΔH@ ("H2O) Actual	Train Vacuum ("Hg)	Temperatures (°F) Stack	Filter	Probe	IMP	Meter	
	140		409.235										
C2	150		418.460	NA	2.80	2.80	3.0	NA	234	70%	65	103	93
	160		427.785		2.80	2.80	3.0		234		66	103	93
N	170		437.025		2.80	2.80	3.0		235		66	103	94
T	180	1433	446.325		2.80	2.80	3.0		231		66	103	93
VALVE													
			164.726			2.80						91.2	
			JAI			JAI						JAI	

HAYDEN ENVIRONMENTAL GROUP, INC.

000030

7194

METHOD 2 VELOCITY FIELD DATA

Client: FEMCO
Project Number: A95010
Date: 5/10/95
Source: EAST OLIVER
Site: VACUUM PUMP EXHAUST
Run: EO-1 PART
Operators: BL, BF
Barometric Pressure: 29.30
Static Pressure: -0.05

Pitot Tube I.D.: 3A
Thermocouple I.D.: 5N
Pre-Test Leak Check: ✓
Post-Test Leak Check: ✓
Stack I.D.: 10"

METHOD 4 DATA

Wet Bulb Thermocouple I.D.:
Dry Bulb Thermocouple I.D.:
Temperatures (°F); Wet: Dry:

Traverse Point #	Δ P ("H_2O)	Stack Temp. (°F)	Traverse Point #	Δ P ("H_2O)	Stack Temp. (°F)
1	0.20	85	NOT		
2	0.22	85	ACCESSIBLE		
3	0.20	85			
4	0.13	84			

O_2:
CO_2:
Bws:
Δ P:
√Δ P: 0.4310
Ts: 84.8
Vs:
Qa:
Qstd:

SKETCH

HAYDEN ENVIRONMENTAL GROUP INC.

000021

- 2194

E 7194

SAMPLE RECOVERY DATA

Client: FERMCO PN: A95010 Date: 5/4/95
Source: EAST OLIVER Site: VACUUM PUMP EXHAUST Run#: 60-1
Sample Date: 5/10/95 Recovery Date: 5/11/95

Filter No: 000229 Glassware Set No: _____ Sample Box No: 5

IMPINGER DATA

Gravimetric: / Volumetric: _____

	#1	#2	#3	#4	#5	Total
Contents	100 ml DI H_2O	100 ml DI H_2O	Empty	Sil Gel		
Final						
Initial	536.7	573.8 g	461.1 g	603.6 g		
Net						

RECOVERED SAMPLE

Description of Particulate on Filter: WHITE NONE VISABLE

Color of Silica Gel: 20% BLUE

Recovered By: BJ

000022

HAYDEN ENVIRONMENTAL GROUP, INC.

SAMPLE RECOVERY DATA

Client: FERMCO PN: A95010 Date: 5/4/95
Source: EAST OLIVER Site: VACUUM PUMP EXHAUST Run#: F0-1
Sample Date: 5/10/95 Recovery Date: 5/11/95

Filter No: 000229 Glassware Set No: _____ Sample Box No: 5

IMPINGER DATA

Gravimetric: / Volumetric: _____

	#1	#2	#3	#4	#5	Total
Contents	100 ml DI H_2O	100 ml DI H_2O	Empty	Sil Gel		
Final						
Initial	536.7	573.8 g	461.1 g	603.6 g		
Net						

RECOVERED SAMPLE

Description of Particulate on Filter: WHITE NONE VISIBLE

Color of Silica Gel: 20% BLUE

Recovered By: BJ

HAYDEN ENVIRONMENTAL GROUP, INC.

APPENDIX B

LABORATORY DATA

DATA CHEM
LABORATORIES
A SORENSON COMPANY

Case Narrative

Method: EPA Method 5, 40 CFR
Analysis: Particulates
DCL Set ID: S95-0498-BE

Client: Hayden Environmental Group, Inc.
Account: 3025
Matrix: Water/Acetone

General Set Information: There were eight field samples in this set.

Method Summary: The beakers were uniquely marked and rinsed with ASTM type II water, and then placed in a 180°C oven for at least one hour. The beakers were then placed in a desiccator for at least three hours before obtaining a tare weight. The corresponding entire sample was poured into each beaker, then rinsed well with ASTM type II water or acetone (as appropriate for each sample) to remove all dissolved solids. The water samples were placed in the 97°C oven to evaporate. The acetone samples were allowed to evaporate in a hood before being placed in the 97°C oven. The evaporated samples were dried at 103°C for at least an hour and transferred to a desiccator. After being in the desiccator for at least three hours, they were weighed again. The difference in weight is the result. Samples were weighed until two consecutive results showed a difference in weight of no more than 0.0004 gram.

Method and Sample QC data: LCS recovery was 97.4%. The method blank was below the CRDL.

MD Analysis: A matrix duplicate was not performed because all sample was consumed in the analysis.

Sample Calculation: The final results are calculated in mg/L. Example for sample EO 3872:

$$\frac{(81.6798\,g - 81.6629\,g)\,x\,(1000\,mg/g)}{(0.154\,L)} = 109.7\,mg/L$$

Cynthia Adams 06/16/95
Cynthia Adams Date

his report is 16
otal pages.

\\owl\wl_current\casenarr\mdf\g954q002.tss

DATA CHEM LABORATORIES
A Sorenson Company

COVER FORM (TYPE I)
SINGLE METHOD ANALYSES

SUMMARY INFORMATION

7194

Form RLIMS63M-V1.0
06159521345631
Page 1

G954P022

Date Reported.....:

Date Printed.....: 15-JUN-95 21:34
DCL Client Group..: S95-0498-BE

Client Ref Number.: Not Provided
Release Number....: Not Provided

Analysis Method...: EPA 5

Hayden Environmental Group, Inc.
Attention: David Robinson
561 Congress Park Drive
Dayton, OH 45459

Client Sample ID	Lab Sample ID
BL-57150-1	BL-57150-1
QC-57150-1	QC-57150-1
REAG BLK	EO 3869
REAG BLK	EO 3870
EO-1	EO 3872
EO-1	EO 3873
LO-1	EO 3875
LO-1	EO 3876
FLD BLK	EO 3879
FLD BLK	EO 3880

Cynthia Adams
Analyst: Cynthia Adams

Suzanne W. Bowe
Reviewer: Suzanne W. Bowe

Tim S. Mikesell
Laboratory Supervisor: Tim S. Mikesell

960 West LeVoy Drive / Salt Lake City, Utah 84123-2547 / (801) 266-7700
FAX (801) 268-9992

DATA CHEM LABORATORIES
A Sorenson Company

FORM H (TYPE I)
SINGLE METHOD ANALYSES

SAMPLE GROUP COMMENTS

Date Printed.....: 15-JUN-95 01:24
DCL Client Group..: S95-0498-BE

ient Name.....: Hayden Environmental Group, Inc.

Release Number....: Not Provided

neral Information

The DCL QC Database maintains all numerical figures which are input from the pertinent data urce. These data have not been rounded to significant figures nor have they been moisture corrected. ports generated from the system, however, list data which have been rounded to the number of gnificant figures requested by the client or deemed appropriate for the method. This may create nor discrepancies between data which appear on the QC Summary Forms (Forms B-G) and those that would calculated from rounded analytical results. Additionally, if a moisture correction is performed, fferences will be observed between the QC data and the surrogate data reported on Form A (or other port forms) and corresponding data reported on QC Summary Forms. In these cases, the Form A will dicate the "Report Basis" as well as the moisture value used for making the correction.

mbol Definitions

ND - Not Detected above the MDL or IDL (LLD or MDC for radiochemistry).
B - For organic analysis the qualifier indicates that this analyte was found in the method blank. For inorganic analysis the qualifier signifies the value is between the IDL and PQL.
J - The qualifier indicates that the value is between the MDL and the PQL. It is also used for indicating an estimated value for tentatively identified compounds in mass spectrometry where a 1:1 response is assumed.

960 West LeVoy Drive / Salt Lake City, Utah 84123-2547 / (801) 266-7700
FAX (801) 268-9992

DATA CHEM LABORATORIES
A Sorenson Company

FORM A (TYPE I)
SINGLE METHOD ANALYSES

SAMPLE ANALYSIS DATA SHEET

S95550VJ

Date Printed.....: 15-JUN-95 01:24
Client Sample Name: BL-57150-1
DCL Sample Name...: BL-57150-1

Client Name.....: Hayden Environmental Group, Inc.
Client Ref Number....: Not Provided
Sampling Site.....: Not Applicable
Release Number.....: Not Provided

Matrix.....: WATER
Date Sampled.....: Not Applicable
Reporting Units...: mg/L
☐ As Received ☐ Dried

Date Received.....: Not Applicable
DCL Client Group.....: S95-0498-BE

DCL Preparation Group: Not Applicable
Date Prepared.....: Not Applicable
Preparation Method...: Not Applicable
Aliquot Weight/Volume: 100 mL
Net Weight/Volume....: Not Required

DCL Analysis Group: G9555063
Analysis Method...: 160.3
Instrument Type...: GRAV
Instrument ID.....: Balance
Column Type.....: Not Applicable

Analytical Results

Analyte	Date Analyzed	MDL	Result	Flag	Dilution	CRDL
Particulates	25-MAY-95 00:00	10	ND			10

960 West LeVoy Drive / Salt Lake City, Utah 84123-2547 / (801) 266-7700
FAX (801) 268-9992

DATA CHEM LABORATORIES
A Sorenson Company

FORM A (TYPE I)
SINGLE METHOD ANALYSES

SAMPLE ANALYSIS DATA SHEET

7194
Form RLIMS63A-V1.0
06159501245655
Page 4

S95550VK

Date Printed.....: 15-JUN-95 01:24
Client Sample Name: QC-57150-1
DCL Sample Name...: QC-57150-1

ient Name.....: Hayden Environmental Group, Inc.
ient Ref Number....: Not Provided
npling Site.....: Not Applicable
lease Number.....: Not Provided

Matrix.....: WATER
Date Sampled.....: Not Applicable
Reporting Units...: mg/L
☐As Received ☐Dried

:e Received.....: Not Applicable
, Client Group.....: S95-0498-BE

, Preparation Group: Not Applicable
:e Prepared.....: Not Applicable
paration Method...: Not Applicable
iquot Weight/Volume: 100 mL
: Weight/Volume....: Not Required

DCL Analysis Group: G9555063
Analysis Method...: 160.3
Instrument Type...: GRAV
Instrument ID.....: Balance
Column Type.....: Not Applicable

alytical Results

lyte	Date Analyzed	MDL	Result	Flag	Dilution	CRDL
ticulates	25-MAY-95 00:00	10	730			10

000023 005

960 West LeVoy Drive / Salt Lake City, Utah 84123-2547 / (801) 266-7700
FAX (801) 268-9992

DATA CHEM LABORATORIES
A Sorenson Company

FORM A (TYPE I)
SINGLE METHOD ANALYSES

SAMPLE ANALYSIS DATA SHEET

7194

Form RLIMS63A-V1.0
06159501245655
Page 5

S954P06R

Date Printed.....: 15-JUN-95 01:24
Client Sample Name: REAG BLK |200153662
DCL Sample Name...: EO 3869

ient Name.....: Hayden Environmental Group, Inc.
ient Ref Number....: Not Provided
npling Site.....: Rel# 1000006737
lease Number.....: Not Provided

:e Received.....: 18-MAY-95 00:00
, Client Group.....: S95-0498-BE

Matrix.....: ACETNE
Date Sampled.....: 11-MAY-95 00:00
Reporting Units...: mg/L
Report Basis.....: ☒ As Received ☐ Dried

, Preparation Group: Not Applicable
:e Prepared.....: Not Applicable
ıparation Method...: Not Applicable
.quot Weight/Volume: 216 mL
. Weight/Volume....: Not Required

DCL Analysis Group: G9555063
Analysis Method...: 160.3
Instrument Type...: GRAV
Instrument ID.....: Balance
Column Type.....: Not Applicable

ılytical Results

lyte	Date Analyzed	MDL	Result	Flag	Dilution	CRDL
ticulates	25-MAY-95 00:00	10	ND			10

000030

006

960 West LeVoy Drive / Salt Lake City, Utah 84123-2547 / (801) 266-7700
FAX (801) 268-9992

DATA CHEM LABORATORIES
A Sorenson Company

FORM A (TYPE I)
SINGLE METHOD ANALYSES

SAMPLE ANALYSIS DATA SHEET

ent Name.....: Hayden Environmental Group, Inc.
ent Ref Number....: Not Provided
pling Site.....: Rel# 1000006737
ase Number.....: Not Provided

e Received.....: 18-MAY-95 00:00
Client Group.....: S95-0498-BE

Preparation Group: Not Applicable
e Prepared.....: Not Applicable
paration Method...: Not Applicable
quot Weight/Volume: 370 mL
Weight/Volume....: Not Required

Date Printed.....: 15-JUN-95 01:24
Client Sample Name: REAG BLK |200153666
DCL Sample Name...: EO 3870

Matrix.....: WATER
Date Sampled.....: 11-MAY-95 00:00
Reporting Units...: mg/L
Report Basis.....: ☒ As Received ☐ Dried

DCL Analysis Group: G9555063
Analysis Method...: 160.3
Instrument Type...: GRAV
Instrument ID.....: Balance
Column Type.....: Not Applicable

lytical Results

lyte	Date Analyzed	MDL	Result	Flag	Dilution	CRDL
ticulates	25-MAY-95 00:00	10	ND			10

960 West LeVoy Drive / Salt Lake City, Utah 84123-2547 / (801) 266-7700
FAX (801) 268-9992

DATA CHEM LABORATORIES
A Sorenson Company

FORM A (TYPE I)
SINGLE METHOD ANALYSES

SAMPLE ANALYSIS DATA SHEET

Form RLIMS63A-V1.0
06159501245655
Page 7

S954P06T

ent Name.....: Hayden Environmental Group, Inc.
ent Ref Number....: Not Provided
pling Site.....: Rel# 1000006737
ease Number.....: Not Provided

e Received.....: 18-MAY-95 00:00
Client Group.....: S95-0498-BE

Preparation Group: Not Applicable
e Prepared.....: Not Applicable
paration Method...: Not Applicable
quot Weight/Volume: 154 mL
Weight/Volume....: Not Required

Date Printed.....: 15-JUN-95 01:24
Client Sample Name: EO-1 |200153663
DCL Sample Name...: EO 3872

Matrix.....: ACETNE
Date Sampled.....: 10-MAY-95 00:00
Reporting Units...: mg/L
Report Basis.....: ☒ As Received ☐ Dried

DCL Analysis Group: G9555063
Analysis Method...: 160.3
Instrument Type...: GRAV
Instrument ID.....: Balance
Column Type.....: Not Applicable

lytical Results

lyte	Date Analyzed	MDL	Result	Flag	Dilution	CRDL
ticulates	25-MAY-95 00:00	10	110			10

960 West LeVoy Drive / Salt Lake City, Utah 84123-2547 / (801) 266-7700
FAX (801) 268-9992

DATA CHEM LABORATORIES
A Sorenson Company

FORM A (TYPE I)
SINGLE METHOD ANALYSES

SAMPLE ANALYSIS DATA SHEET

S954P06V

ent Name.....: Hayden Environmental Group, Inc.
ent Ref Number....: Not Provided
pling Site.....: Rel# 1000006737
ease Number.....: Not Provided

e Received.....: 18-MAY-95 00:00
Client Group.....: S95-0498-BE

Preparation Group: Not Applicable
e Prepared.....: Not Applicable
paration Method...: Not Applicable
quot Weight/Volume: 440 mL
Weight/Volume....: Not Required

Date Printed.....: 15-JUN-95 01:24
Client Sample Name: EO-1 |200153667
DCL Sample Name...: EO 3873

Matrix.....: WATER
Date Sampled.....: 10-MAY-95 00:00
Reporting Units...: mg/L
Report Basis.....: ☒ As Received ☐ Dried

DCL Analysis Group: G9555063
Analysis Method...: 160.3
Instrument Type...: GRAV
Instrument ID.....: Balance
Column Type.....: Not Applicable

lytical Results

lyte	Date Analyzed	MDL	Result	Flag	Dilution	CRDL
ticulates	25-MAY-95 00:00	10	20			10

960 West LeVoy Drive / Salt Lake City, Utah 84123-2547 / (801) 266-7700
FAX (801) 268-9992

DATA CHEM LABORATORIES
A Sorenson Company

FORM A (TYPE I)
SINGLE METHOD ANALYSES

SAMPLE ANALYSIS DATA SHEET

7194
Form RLIMS63A-V1.0
06159501245655
Page 9
S954P06W

Date Printed.....: 15-JUN-95 01:24
Client Sample Name: LO-1 |200153664
DCL Sample Name...: EO 3875

ent Name.....: Hayden Environmental Group, Inc.
ent Ref Number....: Not Provided
pling Site.....: Rel# 1000006737
ease Number.....: Not Provided

Matrix.....: ACETNE
Date Sampled.....: 09-MAY-95 00:00
Reporting Units...: mg/L
Report Basis.....: ☒ As Received ☐ Dried

e Received.....: 18-MAY-95 00:00
Client Group.....: S95-0498-BE

Preparation Group: Not Applicable
e Prepared.....: Not Applicable
paration Method...: Not Applicable
quot Weight/Volume: 240 mL
Weight/Volume....: Not Required

DCL Analysis Group: G9555063
Analysis Method...: 160.3
Instrument Type...: GRAV
Instrument ID.....: Balance
Column Type.....: Not Applicable

lytical Results

lyte	Date Analyzed	MDL	Result	Flag	Dilution	CRDL
ticulates	25-MAY-95 00:00	10	30			10

000034

010

960 West LeVoy Drive / Salt Lake City, Utah 84123-2547 / (801) 266-7700
FAX (801) 268-9992

DATA CHEM LABORATORIES
A Sorenson Company

FORM A (TYPE I)
SINGLE METHOD ANALYSES

SAMPLE ANALYSIS DATA SHEET

Form RLIMS63A-V1.0
06159501245655
Page 10

S954P06X

Date Printed.....: 15-JUN-95 01:24
Client Sample Name: LO-1 |200153668
DCL Sample Name...: EO 3876

ent Name.....: Hayden Environmental Group, Inc.
ent Ref Number....: Not Provided
pling Site.....: Rel# 1000006737
ase Number.....: Not Provided

Matrix.....: WATER
Date Sampled.....: 09-MAY-95 00:00
Reporting Units...: mg/L
Report Basis.....: ☒ As Received ☐ Dried

e Received.....: 18-MAY-95 00:00
Client Group.....: S95-0498-BE

Preparation Group: Not Applicable
e Prepared.....: Not Applicable
paration Method...: Not Applicable
quot Weight/Volume: 349 mL
Weight/Volume....: Not Required

DCL Analysis Group: G9555063
Analysis Method...: 160.3
Instrument Type...: GRAV
Instrument ID.....: Balance
Column Type.....: Not Applicable

lytical Results

lyte	Date Analyzed	MDL	Result	Flag	Dilution	CRDL
ticulates	25-MAY-95 00:00	10	ND			10

000035

011

960 West LeVoy Drive / Salt Lake City, Utah 84123-2547 / (801) 266-7700
FAX (801) 268-9992

DATA CHEM LABORATORIES
A Sorenson Company

FORM A (TYPE I)
SINGLE METHOD ANALYSES

SAMPLE ANALYSIS DATA SHEET

Form RLIMS63A-V1.0
06159501245655
Page 11

S954P06Y

Date Printed.....: 15-JUN-95 01:24
Client Sample Name: FLD BLK |200153665
DCL Sample Name...: EO 3879

Client Name.....: Hayden Environmental Group, Inc.
Client Ref Number....: Not Provided
Sampling Site.....: Rel# 1000006737
Release Number.....: Not Provided

Matrix.....: ACETNE
Date Sampled.....: 11-MAY-95 00:00
Reporting Units...: mg/L
Report Basis.....: ☒ As Received ☐ Dried

Date Received.....: 18-MAY-95 00:00
DCL Client Group.....: S95-0498-BE

DCL Preparation Group: Not Applicable
Date Prepared.....: Not Applicable
Preparation Method...: Not Applicable
Aliquot Weight/Volume: 230 mL
Net Weight/Volume....: Not Required

DCL Analysis Group: G9555063
Analysis Method...: 160.3
Instrument Type...: GRAV
Instrument ID.....: Balance
Column Type.....: Not Applicable

Analytical Results

Analyte	Date Analyzed	MDL	Result	Flag	Dilution	CRDL
Particulates	25-MAY-95 00:00	10	ND			10

960 West LeVoy Drive / Salt Lake City, Utah 84123-2547 / (801) 266-7700
FAX (801) 268-9992

DATA CHEM LABORATORIES
A Sorenson Company

FORM A (TYPE I)
SINGLE METHOD ANALYSES

SAMPLE ANALYSIS DATA SHEET

S954P06Z

ent Name.....: Hayden Environmental Group, Inc.
ent Ref Number....: Not Provided
pling Site.....: Rel# 1000006737
ease Number.....: Not Provided

e Received.....: 18-MAY-95 00:00
Client Group.....: S95-0498-BE

Preparation Group: Not Applicable
e Prepared.....: Not Applicable
paration Method...: Not Applicable
quot Weight/Volume: 430 mL
Weight/Volume....: Not Required

Date Printed.....: 15-JUN-95 01:24
Client Sample Name: FLD BLK |200153669
DCL Sample Name...: EO 3880

Matrix.....: WATER
Date Sampled.....: 11-MAY-95 00:00
Reporting Units...: mg/L
Report Basis.....: ☒ As Received ☐ Dried

DCL Analysis Group: G9555063
Analysis Method...: 160.3
Instrument Type...: GRAV
Instrument ID.....: Balance
Column Type.....: Not Applicable

lytical Results

lyte	Date Analyzed	MDL	Result	Flag	Dilution	CRDL
iculates	25-MAY-95 00:00	10	ND			10

960 West LeVoy Drive / Salt Lake City, Utah 84123-2547 / (801) 266-7700
FAX (801) 268-9992

DATA CHEM LABORATORIES
A Sorenson Company

FORM B (TYPE I)
SINGLE METHOD ANALYSES

QUALITY CONTROL DATA SHEET
LABORATORY CONTROL SAMPLE (LCS)

ent Name.....: Hayden Environmental Group, Inc.
base Number.....: Not Provided

rix.....: WATER
orting Units.....: mg/L

Source.....:

Preparation Group: Not Applicable
e Prepared.....: Not Applicable
paration Method...: Not Applicable

Date Printed.....: 15-JUN-95 01:24
DCL Sample Name...: QC-57150-1

DCL Analysis Group: G9555063
Analysis Method...: 160.3
Instrument Type...: GRAV
Instrument ID.....: Balance
Column Type.....: Not Applicable

QC Limit Type.....: Method

lytical Results

lyte	Date Analyzed	Target	Result	Percent Recovery	QC Limits	QC Flag
	25-MAY-95 00:00	746.	726.	97.4	80.0/120.	

960 West LeVoy Drive / Salt Lake City, Utah 84123-2547 / (801) 266-7700
FAX (801) 268-9992

DATA CHEM LABORATORIES
A Sorenson Company

FORM C (TYPE I)
SINGLE METHOD ANALYSES

QUALITY CONTROL DATA SHEET
BLANK SAMPLE

7194

Form RLIMS63C-V1.0
06159501245655
Page 14

S95550VJ

ent Name.....: Hayden Environmental Group, Inc.
ease Number.....: Not Provided

rix.....: WATER
orting Units.....: mg/L

Preparation Group: Not Applicable
e Prepared.....: Not Applicable
paration Method...: Not Applicable

Date Printed.....: 15-JUN-95 01:24
DCL Sample Name...: BL-57150-1

DCL Analysis Group: G9555063
Analysis Method...: 160.3
Instrument Type...: GRAV
Instrument ID.....: Balance
Column Type.....: Not Applicable

lytical Results

lyte	Date Analyzed	Result	CRDL
	25-MAY-95 00:00	-8.00	10.0

000039 015

960 West LeVoy Drive / Salt Lake City, Utah 84123-2547 / (801) 266-7700
FAX (801) 268-9992

7194

DATA CHEM LABORATORIES
A Sorenson Company

QUALITY CONTROL REPORT

Form RLIMS65-V1.0
06069522533261
Page 1

G9555063

hod....: 160.3, EPA 5
lyte...: TS OR PARTICULATE
rix....: WATER

Date Printed....: 06-JUN-1995 22:53
Group Name.....: G9555063
Analyst.....: CA
Units.....: mg/L

ınk Results

ple ID	Sample Name	QC Date	Blank Result	Lower Limit	Upper Limit	Flags
550VJ	BL-57150-1	25-MAY-1995	-8.00	-10.0	10.0	Mp

; Results

ple ID	Sample Name	QC Date	LCS Result	Amount Spiked	Percent Recovery	Lower Limit	Upper Limit	Flags
550VK	QC-57150-1	25-MAY-1995	726.	746.	97.4	80.0	120.	Mp

checked by: Suzanne W. Bowe 06/16/95

000040

016

960 West LeVoy Drive / Salt Lake City, Utah 84123-2547 / (801) 266-7700
FAX (801) 268-9992

DATA CHEM LABORATORIES
A SORENSON COMPANY

7194

Datapackage Table of Contents

Information pertaining to this datapackage is divided into the four categories listed below (see colored divider sheets for an inventory list of each category). If an item on the inventory is not applicable, an "NA" is placed in the corresponding check box. A Case Narrative immediately precedes this Table of Contents and contains pertinent information about this datapackage.

Analytical Forms ..... Yellow
Sample Tracking Documentation ..... Pink
Analytical Documentation ..... Blue
Raw Data ..... Green

♦ ♦ ♦ ♦ ♦ ♦ ♦ ♦ ♦ ♦

Analytical Forms
Inventory Checklist

[X] Case Narrative

[NA] IRDMIS

- [ ] Data Review and Approval Form
- [ ] IRDMIS Reports
- [ ] GC/MS TICs

[X] Commercial Forms

- [NA] Analytical or Environmental Report Form
- [NA] Set Comments
- [X] Applicable QC Sheets

[X] RLIMS Forms

- [X] Cover Form
- [X] Sample Group Comments (Form H)
- [X] Sample Analysis Data Sheet (Form A)
- [X] Laboratory Control Sample (Form B)
- [X] Blank Sample (Form C)
- [NA] Matrix Spike Sample (Form D)
- [NA] Matrix Duplicate Sample (Form E)
- [NA] Matrix Spike/Matrix Spike Duplicate Sample (Form F)
- [NA] Surrogate Summary (Form G)
- [NA] Initial Calibration Form
- [NA] Continuing Calibration Form
- [NA] Serial Dilution Form
- [NA] Endrin Breakdown or BFB/DFTPP GC/MS Tuning Form
- [NA] Internal Standard Form

Analytical Forms
Reviewer Checklist

X The Analytical Forms Inventory Checklist above is complete.

X The Case Narrative was completed in accordance with procedures in DCL SOP XX-DC-020, "Datapackage Preparation and Validation."

X Only the correct report forms are used (IRDMIS or Commercial Forms or RLIMS Forms).

X All fields on the report forms are complete with the correct information, including signatures.

X Results for all samples are reported per client request.

X Units, methods, and dates are correct.

X Sample and/or set comments are complete.

Assembled by: Cynthia Adams 06/06/95 (Signature / Date) Reviewed by: Suzanne W. Bowe 06/16/95 (Signature / Date)

000041

3/95

DATA CHEM LABORATORIES
A SORENSON COMPANY

7194

Sample Tracking Documentation
Inventory Checklist

- [X] LIMS Grouping Reports
- [X] DataChem Laboratories (DCL) Chain-of-Custody Record
- [X] DCL Sample Work Order
- [NA] Copy of numbered Nonconformance/Corrective Action Report (NC/CAR)
- [NA] Copy of Client-Related Problem Report (CPR)

Sample Tracking Documentation
Reviewer Checklist

X The Sample Tracking Documentation Inventory Checklist above is complete.

X DCL Chain-of-Custody Record provides signatures for the sample portion reported in this data package.

X DCL Chain-of-Custody Record was completed in accordance with procedures in DCL SOP XX-DC-006 "Chain-of-Custody and Laboratory Tracking."

X Methods specified on the Sample Work Order were performed or an explanation for deviations is provided.

X Special instructions on the Sample Work Order were followed.

X Project Management instructions on the Project Protocol Worksheet were followed.

X Client's requests were met or an explanation is provided in the Case Narrative.

NA NC/CAR and/or CPR were completed in accordance with procedures in DCL SOP QC-DC-006 "Nonconformance/Corrective Action Report (NC/CAR) Procedures."

000042

Assembled by: Cynthia Adams (Signature) 06/06/95 (Date) Reviewed by: Suzanne W. Bowe (Signature) 06/16/95 (Date)

DataChem Laboratories
LIMS - Sample Master System
Analysis Group Report

Date: 6-JUN-1995 22:21
User: ADAMS

RLIMS15-V1.1

Analysis Run Name: G9555063

Group ID: G9555063

Samples: 10

Pos	Laboratory Sample Name	Field Sample Name	Laboratory Sample ID	Laboratory Group Name	Accnt. Number
1	BL-57150-1	BL-57150-1	S95550VJ	S95-0498-BE	03025
2	QC-57150-1	QC-57150-1	S95550VK	S95-0498-BE	03025
3	EO 3869	REAG BLK	S954P06R	S95-0498-BE	03025
4	EO 3870	REAG BLK	S954P06S	S95-0498-BE	03025
5	EO 3872	EO-1	S954P06T	S95-0498-BE	03025
6	EO 3873	EO-1	S954P06V	S95-0498-BE	03025
7	EO 3875	LO-1	S954P06W	S95-0498-BE	03025
8	EO 3876	LO-1	S954P06X	S95-0498-BE	03025
9	EO 3879	FLD BLK	S954P06Y	S95-0498-BE	03025
10	EO 3880	FLD BLK	S954P06Z	S95-0498-BE	03025

----- END OF LISTING -----

Earliest Sampling Date: 9-May-1995

DataChem Laboratories
CHAIN-OF-CUSTODY

Results due by: 7-Jun-1995

Project/Job/Task: COMM-ENV | Split: | Root Set ID: S95-0498 * | Reporting Group | BE

Client: Hayden Environmental Group, Inc. | Account: 03025

Comments:

Verified: AM 5-23-95

Date Sampled	Field ID Number	DCL Sample Name	DCL Sample ID	QC	Matrix						Analysis: Particulates									# Bottles
11-May-1995	REAG BLK	EO 3869			ACETNE						X									1
11-May-1995	REAG BLK	EO 3870			WATER						X									1
10-May-1995	EO-1	EO 3872			ACETNE						X									1
10-May-1995	EO-1	EO 3873			WATER						X									1
9-May-1995	LO-1	EO 3875			ACETNE						X									1
9-May-1995	LO-1	EO 3876			WATER						X									1
11-May-1995	FLD BLK	EO 3879			ACETNE						X									1
11-May-1995	FLD BLK	EO 3880			WATER						X									1

Received: Date/Time/Signature 5-18-95 / 1000 / Amaryllis McElwee

ORIGINAL FIELD SAMPLE CHAIN-OF-CUSTODY

Relinquished By: (Signature)	Date/Time	Received By: (Signature)	Reason for Transfer/ Storage Location
Amaryllis McElwee	5-18-95 1100	WALKIN R-23-1 AM	STORAGE R-23-1
R-23-1 CA	05/25/95 17:00	Cynthia Adams	TS analysis / R-403-1 ~~Rm 408~~

SAMPLE PREPARATION / ANALYSIS CHAIN-OF-CUSTODY

Sample Prep/Analysis for: TS | Lab Notebook No.: A21

Prepared/Analyzed by: CA | Date/Time: 05/25/95 20:00

Relinquished By: (Signature)	Date/Time	Received By: (Signature)	Reason for Transfer/ Storage Location

Check box if there is a continuation page ☐

Printed 5/23/1995 16:41

Form: COFC1.01-SWV2.30

000044

2194

- 7194

Sample Work Order

QC Clearance: _____

Project Manager: Keith R. Nicholson

Client: Hayden Environmental Group, Inc.

Account: 03025

Project/Task: COMM-ENV

Date Received: 18-May-1995

Date for Mailing Report: 7-Jun-1995

DCL Root Set ID: S95-0498 *

DCL Lab. Name: EO 3869–EO 3880

Total # Samples: 8

Sample Medium: ACETNE

Earliest Sampling Date: 9-May-1995

Preparation Type:

Rep. Group	Physical Properties - Wet Chemistry Analytes Requested	Latest Prep. Date	Latest Anal. Date	No. of Samp.	Split ID	Storage Location	Analysis/Prep. Method	Inst.	
BE	Particulates			8		Kado lab	40CFR method	Grav	

Special Instructions: Take the entire sample and evaporate in a Tared Beaker below Boiling point ~~at ambient~~ (Temp) for Acetone & Water. Rinse Container w/Acetone to Remove additional sample. After sample comes to dryness desicate to constant weight. Then the beaker w/ Residue goes to Rad chem for additional analysis. Contact ~~Charlie Walker~~ Bill Hauser to hand off samples. (Do a direct handoff please).

Section Manager Approval: Tim S. Mikesell 5/24/95
Tim S. Mikesell — Date

000045

Other Sections Receiving Sample Portions: IM, WA

DataChem Laboratories/ 960 West LeVoy Drive / Salt Lake City, Utah 84123

Form: WO1.04-SWV2.12

PRINTED 5/23/1995 16:49

Fernald Environmental Restoration Management Corporation

RSO - ANALYTICAL LABORATORY SERVICES

Page 1 of 2

OFF-SITE LABORATORY CUSTODY TRANSFER AND ANALYSIS REQUEST RECORD (OCTR)

REFERENCE DOCUMENT NO:

SAR/CR: SPL-95-1376

PURCHASE ORDER NO.: 95-H053	OFF-SITE LAB CONTACT: KEITH NICHOLSON	REPORT TO: FERMCO, P.O. BOX 398704, CINCINNATI, OH 45239-8704
RELEASE NO.: 1000006737	FERMCO CONTACT/PHONE: RICH DAIN (513) 738-9157	
SAMPLE SHIPMENT DATE: 5-17-95	REQUIRED REPORT DATE: PER CONTRACT (NORMAL)	RECEIVING LAB NAME: DATACHEM
SAMPLE SHIPPER: M. CORNELL	SAMPLE TEAM: EFFL. MON. & CNTL	RECEIVING LAB ADDRESS: 960 W. LEVOY DR. SALT LAKE CITY, UT 84123

	SAMPLE NUMBER		SAMPLE DESCRIPTION/TYPE/CODE	DATE/TIME COLLECTED	CONTAINER TYPE	SAMPLE VOLUME	PRESERVATION	ANALYSIS REQUESTED	CONDITION UPON RECEIPT*
1	200153657	REAG. BLK.	G.F. FILTER	5/11/95 1030	PETRI DISH	1 x FLTR	NONE	* PARTICULATES ED 3868	ANALYSIS ED 3881
2	200153662	REAG. BLK.	ACETONE	5/11/95 1030	PLASTIC	1 x 1L	NONE	* 3869 CAN SEAL NO. 2470	
3	200153666	REAG. BLK.	D.I. WATER	5/11/95 1030	PLASTIC	1 x 1L	NONE	* 3870	
4	200153658	EO-1	G.F. FILTER	5/10/95 0930	PETRI DISH	1 x FLTR	NONE	* 3871	3882
5	200153663	EO-1	ACETONE	5/10/95 0930	PLASTIC	1 x 1L	NONE	* 3872	
6	200153667	EO-1	D.I. WATER	5/10/95 0930	PLASTIC	1 x 1L	NONE	* 3873	
7	200153659	LO-1	G.F. FILTER	5/9/95 1450	PETRI DISH	1 x FLTR	NONE	* 3874	3883
8	200153664	LO-1	ACETONE	5/9/95 1450	PLASTIC	1 x 1L	NONE	* 3875	
9	200153668	LO-1	D.I. WATER	5/9/95 1450	PLASTIC	1 x 1L	NONE	* 3876	
10	200153660	FLD BLK	G.F. FILTER	5/11/95 1030	PETRI DISH	1 x FLTR	NONE	* 3877	3884
11	200153665	FLD BLK	ACETONE	5/11/95 1030	PLASTIC	1 x 1L	NONE	* 3879	

SPECIAL INSTRUCTIONS: TOTAL U ANALYSES ARE TO BE PERFORMED BY LASER PHOSPHORMETRY & EITHER COLORIMITY OR FLUOMETRY (AS LISTED IN METHOD 114)

* = TOTAL U (CE); GROSS A/B (DE); PARTICULATES (AE, BE); GAMMA SCAN (EE)

SAMPLE PLAN NUMBER:	PROJECT NAME:	CHARGE NUMBER:
N/A	PERIODIC CONFIRMATORY MSMTS.	7 ECB2

CAN NO.:	SEAL NO.:	CAN NO.:	SEAL NO.:	CAN NO.:	SEAL NO.:	CAN NO.:	SEAL NO.:	CAN NO.:	SEAL NO.:	CAN NO.:	SEAL NO.:
				CAN w/ 5-17-95 COOLER	SEALED	w/ C-o-C	TAPE				

RELINQUISHED BY	DATE	TIME	DATE	TIME	RECEIVED BY
1. Mark Cornell	5-17-95	1300	1. 5-18-95	1000	Stephanie Smith
2. Stephanie Smith	5-18-95	1030	2. 5-18-95	1035	Amaryllis McGuire
3.			3.		

NO.	DISTRIBUTION OF COPIES	
1	WHITE	REMAIN WITH SAMPLES
2	YELLOW	OFF-SITE LAB
3	PINK	FERMCO DATA REVIEW AND REPORTING
4	BLUE	ORIGINATOR

*IF SEALS ARE BROKEN, CONTACT THE FERMCO CONTACT LISTED ABOVE IMMEDIATELY.

000046

7194

Fernald Environmental Restoration Management Corporation
RSO - ANALYTICAL LABORATORY SERVICES

OFF-SITE LABORATORY CUSTODY TRANSFER AND ANALYSIS REQUEST RECORD (OCTR)

REFERENCE DOCUMENT NO:
SAR/CR: SPL-95-1376

PURCHASE ORDER NO.: 95-H053	OFF-SITE LAB CONTACT: KEITH NICHOLSON	REPORT TO: FERMCO, P.O. BOX 398704, CINCINNATI, OH 45239-8704
RELEASE NO.: 1000006737	FERMCO CONTACT/PHONE: RICH DAIN (513) 738-9157	
SAMPLE SHIPMENT DATE: 5-17-95	REQUIRED REPORT DATE: PER CONTRACT (NORMAL)	RECEIVING LAB NAME: DATACHEM
SAMPLE SHIPPER: M. CORNELL	SAMPLE TEAM: EFF. MON. & CNTL	RECEIVING LAB ADDRESS: 960 W. LEVOY DR. SALT LAKE CITY, UT. 84123

	SAMPLE NUMBER	SAMPLE DESCRIPTION/TYPE/CODE	DATE/TIME COLLECTED	CONTAINER TYPE	SAMPLE VOLUME	PRESERVATION	ANALYSIS REQUESTED	CONDITION UPON RECEIPT*
1	200153669 FLD BLK	D.I. WATER	5/11/95 1030	PLASTIC	1 x 1L	NONE	*EO 3880	EO 3884
2								
3								
4								
5								
6								
7								
8								
9								
10								
11								

CAN SEAL NO: 2470

LAST ENTRY MMC 5-17-95

SPECIAL INSTRUCTIONS: TOTAL U ANALYSES ARE TO BE PERFORMED BY LASER PHOSPHORMETRY & EITHER COLORMITY OR FLOUOMETRY (AS LISTED IN METHOD 114)

*= TOTAL U; GROSS A/B; PARTICULATES; GAMMA SCAN

SAMPLE PLAN NUMBER:	PROJECT NAME:	CHARGE NUMBER:
N/A	PERIODIC CONFIRMATORY MSMTS.	7 ECB 2

CAN NO.:	SEAL NO.:	CAN NO.:	SEAL NO.:	CAN NO.:	SEAL NO.:	CAN NO.:	SEAL NO.:	CAN NO.:	SEAL NO.:	CAN NO.:	SEAL NO.:
				CAN COOLER		SEALED W/C-O-C TAPE					

MMC 5-17-95

RELINQUISHED			RECEIVED		
RELINQUISHED BY	DATE	TIME	DATE	TIME	RECEIVED BY
1. M. Cornell	5-17-95	1300	1. 5-18-95	1000	Stephanie Smith
2. Stephanie Smith	5-18-95	1030	2. 5-18-95	1035	Amaly his McKewee
3.			3.		

NO.	DISTRIBUTION OF COPIES	
1	*WHITE*	REMAIN WITH SAMPLES
2	*YELLOW*	OFF-SITE LAB
3	*PINK*	FERMCO DATA REVIEW AND REPORTING
4	*BLUE*	ORIGINATOR

*IF SEALS ARE BROKEN, CONTACT THE FERMCO CONTACT LISTED ABOVE IMMEDIATELY.

FS-F-3368 (REV. 12/31/92)

000047

7194

HAYDEN

7194

DEN
NTAL GROUP, INC.

Post-it® Fax Note 7671	Date 11-21-94 # of pages ▶ 8
To Customer Service	From D. Robinson
Co./Dept.	Co.
Phone #	Phone #
Fax # 801-268-9292	Fax #

November 21, 1994

Customer Service
DataChem Laboratories
960 West Levoy Drive
Salt Lake City, UT 84123

Subject: Laboratory Services / Subcontracting
FERMCO RFP # PES-80706

Dear Sir or Madam:

We are submitting a proposal in response to the above request and would like to receive a quotation from your firm for laboratory services. Your firm's name was given to us by FERMCO as a qualified subcontract laboratory.

We request a firm, fixed cost proposal to provide analytical support for the scope of work included with this letter. To summarize the analytical scope of work:

1. Provide analysis by USEPA Method 5 (40CFR Part 61) for three field samples from Source EP8-013 and one field sample from EP11-002. Filter, probe rinse (Acetone), and backhalf (H_2O) samples will be included as well as quality control samples (see below). Samples are to be analyzed for total particulate.

2. Following particulate analysis, the fractions for each field sample shall be composited and analyzed to total activity and uranium per EPA Method 114, and according to the protocol shown in Table 2 of the scope of work.

3. Proposed cost shall include cost to analyze and report results for all field samples and quality control samples. Quality control samples to be included in the sample sets:

   - Performance evaluation sample, to be supplied by FERMCO, and analyzed for total Uranium in the same manner as the composites (Item 6, scope of work).

   - Two field blank acetone rinse samples, two field blank filters, two laboratory filter blanks (supplied by Hayden), laboratory matrix spike/spike duplicate, and two container blanks.

F010331.94

000048

TALLY SHEET

7194

RELEASE #: 1000006737 (Can 1 of 1)
PO #: 95-H053 (DCL-SLC)
DATE SHIPPED: 17-May-95
MATERIAL: Periodic Confirmatory Measurements – Filters, Acetone, Water

ANALYSIS: Total U; Gross A/B; Particulates; Gamma Scan

Composite Sample Number	Lot Number	Sample Container Size	AnaLis/ FACTS Number	Gross Weight lbs.	Tare Weight lbs.	Net Weight lbs.
REAG. BLK.	W050-725-P047-6737	PETRI DISH	200153657	0.106	0.088	0.018
REAG. BLK.	W050-725-P047-6737	1L PLST	200153662	0.511	0.141	0.370
REAG. BLK.	W050-725-P047-6737	1L PLST	200153666	0.943	0.141	0.802
EO-1	W050-725-P047-6737	PETRI DISH	200153658	0.106	0.088	0.018
EO-1	W050-725-P047-6737	1L PLST	200153663	0.423	0.141	0.282
EO-1	W050-725-P047-6737	1L PLST	200153667	1.128	0.141	0.987
LO-1	W050-725-P047-6737	PETRI DISH	200153659	0.101	0.088	0.013
LO-1	W050-725-P047-6737	1L PLST	200153664	0.542	0.141	0.401
LO-1	W050-725-P047-6737	1L PLST	200153668	0.934	0.141	0.793
FLD. BLK.	W050-725-P047-6737	PETRI DISH	200153660	0.106	0.088	0.018
FLD. BLK.	W050-725-P047-6737	1L PLST	200153665	0.476	0.141	0.335
FLD. BLK.	W050-725-P047-6737	1L PLST	200153669	1.163	0.141	1.022
				6.537	1.480	5.057

EMP	RADIOLOGICAL SURVEY REPORT COVER SHEET		SURVEY NUMBER: 95-05-G1-194	
7-95	LOCATION: Lab	RCT: BV Dunlap / D. Wessel	BADGE: 10148	PAGE: 1 OF 4
00	LEVEL: 580-	SIGNATURE: BV Dunlap / D. Wessel		
PERMIT NUMBER: N/A		REVIEWER:	BADGE:	
UMBER:		SIGNATURE:	DATE:	

HMENTS:		
3	Pg 2 MURF	
	Pg 3 & 4 Tennelco Printout	

ASON FOR URVEY	
	Sample surveyed for release to go offsite. Gross area smears taken. Direct frisk inside drum
	Release # ~~[illegible]~~ 6737 N/A

MARY:

N/A

Distribution of Copies
Radiological Records
Files

Supervisor Notified	Time	Date	Notified by:

SURVEY 95-05-GII-144

DATE:	LOCATION:	RCT:	SIGNATURE:	BADGE #:
5-17-95	Lab	B.V. Dunlap / D. Wessel	B Dunlap / D Wessel	10148 / 721

MODEL	SERIAL NUMBER	TYPE ALPHA or BETA/GAMMA	CAL DUE DATE	BKGD. (CPM)	CF	MDA (DPM)	INSP/PERFORMANCE TEST YES	NO
LB5100	7	α, β, γ	6-95	.2 / 1.72	.289 / 418	18.2 / 19.8	X	
M-3	77101	β, γ	10-95	60	30	3K	X	
			N					
				A				

TIME	RCT INIT	MATERIAL DESCRIPTION	RELEASE CRITERIA SURF or VOL	RESULTS ALPHA REMOVABLE	ALPHA FIXED + REM	BETA/GAMMA REMOVABLE	BETA/GAMMA FIXED + REM	RELEASE JUSTIFICATION	RECIPIENT	MATERIAL RELEASE EVALUATOR BADGE # and SIGNATURE (1)
0700	bd/DC	200153667	SURF	-0 *	N/A	0 *	<MDCR		Don Stack	
		200153668		2 *		4 *	<MDCR			
		200153669		2 *		4 *	<MDCR			
		200153666		-0 *		4 *	<MDCR			
		200153662		-0 *		0 *	<MDCR			
		200153665		-0 *		-1 *	<MDCR			
		200153664		2 *		-1 *	<MDCR			
		200153663		2 *		8 *	<MDCR			
		200153658 (AF)		-0 *		0 *	<MDCR	*		N/A
		200153659 (AF)		5 *		-1 *	<MDCR	*		
		200153660 (AF)		-0 *		0 *	<MDCR	*		
		200153657 (AF)		2 *		0 *	<MDCR	*		
		10 gal Can		-0 *		0 *	<MDCR			
					N					
						A				

Comments: Release # 6737

(AF) = Air Filter

* M:ESH:BCRC: 93 613

REVIEW:	INITIAL	DATE

(1) Material Release Evaluator approval required in accordance with RC-DPT-019, (Release of Materials from the Fernald Environmental Management Project), if any of the following conditions exist:

a. Material has areas which are inaccessible for proper survey.
b. Process knowledge is used to support the release decision.
c. Material must be evaluated for the potential of contamination beneath any coating applied while the material was in the Controlled Area.
d. Material must be evaluated for the potential for any volume or in-depth radioactivity within the material matrix.
e. Special case items are being released, such as radioactive consumer products, industrial sources, etc.
f. Material has detectable activity present and the activity is below the contamination limits listed in Attachment A of RC-DPT-019.

PSLF-1015 (06/22/94) equil.

000051

2164

AY 17, 1995 08:57:36 7194
A SYSTEM #7 SMEARS FOR FREE RELEASE (1.1 MIN)

E R	GROSS ALPHA	GROSS B-g	REMOV. dpm_a	REMOV. dpm_B-g	TIME OF COUNT
	0	2	-0	0	08:58:45
	1	4	2	4	09:00:06
	1	4	2	4	09:01:27
	0	4	-0	4	09:02:48
	0	2	-0	0	09:04:10
	0	1	-0	-1	09:05:30
	1	1	2	-1	09:06:51
	1	6	2	8	09:08:13
	0	2	-0	0	09:09:34
	2	1	5	-1	09:10:55
	0	2	-0	0	09:12:16
	1	2	2	0	09:13:37
	~~0~~	~~5~~	~~0~~	~~6~~	~~09:14:58~~ hd 5-17-95

TION COMPLETE

FEMP RADIOLOGICAL SURVEY REPORT pg 3 of 4
SURVEY # 9505-G11-194 DATE 5-17-95
(PRINT) (SIGNATURE)
BV Dunlap/D. Hesse/ BUR L. Wenal

AY 17, 1995 10:04:45 WE
A SYSTEM #7 SMEARS FOR FREE RELEASE (1.1 MIN)

E R	GROSS ALPHA	GROSS B-g	REMOV. dpm_a	REMOV. dpm_B-g	N	TIME OF COUNT
	0	2	-0	0		10:05:55

TION COMPLETE OF

FEMP RADIOLOGICAL SURVEY REPORT pg 4 of 4
SURVEY # 95-05-G11-194 DATED 5-15-95
(name) (signature)
RCT: BUDwyer/D Wilson BUDwyer/D Wilson
REVIEWER:

I2

000053

ACETONE, 3, UN 1090, II

POTENTIAL HAZARDS

R EXPLOSION

able/combustible material; may be ignited by heat, sparks or flames.
s may travel to a source of ignition and flash back.
iner may explode in heat of fire.
explosion hazard indoors, outdoors or in sewers.
f to sewer may create fire or explosion hazard.

HAZARDS

e poisonous if inhaled or absorbed through skin.
s may cause dizziness or suffocation.
ct may irritate or burn skin and eyes.
may produce irritating or poisonous gases.
f from fire control or dilution water may cause pollution.

EMERGENCY ACTION

unnecessary people away; isolate hazard area and deny entry.
upwind; keep out of low areas.
ive pressure self-contained breathing apparatus (SCBA) and
ctural firefighters' protective clothing will provide limited
ection.
e for 1/2 mile in all directions if tank, rail car or tank truck is
lved in fire.
Emergency Response Telephone Number on Shipping Paper first.
ipping Paper not available or no answer, CALL CHEMTREC AT
)-424-9300.
er pollution occurs, notify the appropriate authorities.

Fires: Dry chemical, CO2, water spray or alcohol-resistant foam.
use dry chemical extinguishers to control fires involving
methane or nitroethane.
Fires: Water spray, fog or alcohol-resistant foam.
ontainer from fire area if you can do it without risk.
cooling water to sides of containers that are exposed to flames
well after fire is out. Stay away from ends of tanks.
ssive fire in cargo area, use unmanned hose holder or monitor
es; if this is impossible, withdraw from area and let fire burn.
aw immediately in case of rising sound from venting safety device
y discoloration of tank due to fire.

R LEAK

ff ignition sources; no flares, smoking or flames in hazard area.
eak if you can do it without risk.
spray may reduce vapor; but it may not prevent ignition in closed
s.

Small Spills: Take up with sand or other noncombustible absorbent material and place into containers for later disposal.
Large Spills: Dike far ahead of liquid spill for later disposal.

IRST AID

Move victim to fresh air and call emergency medical care; if not breathing, give artificial respiration; if breathing is difficult, give oxygen.
In case of contact with material, immediately flush eyes with running water for at least 15 minutes. Wash skin with soap and water.
Remove and isolate contaminated clothing and shoes at the site.

Date: 5-18-95 Survey Type: Meter: ✓ Smear: ✓ Leak Test: Approved: RSO Date:

By: MM

Survey Instrument:

Manufacturer: LUDLUM
Model Number 19
Serial Number: ~~159~~ 102872
Calib. Date: 9-30-94

FERMCO mm 5-18-95
~~MX-0199~~ IH.

BACKGROUND <0.011 mR/hr

Scintillation Counter:

Manufacturer: Ludlum
Model Number: 2929
Lab Instrument No.: 108227

Sample Count Time - 1 min.

	ALPHA	BETA
BLANK (CPM)	0.08	65.03
COUNTER EFFICIENCY (%)	0.3517	0.4083

Mixed Waste Lab Survey Location or Sealed Source Number	Instrument Reading	Disc Smears/Leak Test Swipes						Remarks
		Alpha			Beta			
		CPM	DPM	µCi	CPM	DPM	µCi	
M095 0341 OUTSIDE	<0.012 mR/hr	0			68			<0.011 mR/hr @ 1 METER
INSIDE	<0.012	0			63			
SAMPLES	<0.012	0			71			

000056

2194

7194

DATACHEM LABORATORIES COOLER RECEIPT CHECKLIST

1. Client Name: FERMCO
2. Project/Task/Site: REL. #: 6737
3. Time/Date of Receipt: 1000 5-18-95
4. # Coolers Received: 1
5. Custody Seals?: (Circle) Present/Absent* Intact/Broken*
   Tamper Evident: Yes/No
6. Condition of Coolers: Acceptable/Unacceptable
7. Comments on Cooler Condition (#6)
   1 DRUM
8. Ice Present: Yes/No* Frozen/Melted
   Comments: RAD CHEM ONLY
9. Temp Control: Present/Not Included
10. Location Temp Taken: Control/Between Samples
11. Taken by: (Signature) [signature] 5-18-95
    (Printed Name) MARK MENDENHALL
    (Date/Time) 5-18-95 1130
12. Are all temperatures within project specific guidelines? Yes/No*

*CONTACT PROJECT MANAGER. COMPLETE INCIDENT REPORT.

Cooler Received	DCL Cooler #	Temp	Cooler Received	DCL Cooler #	Temp	Cooler Received	DCL Cooler #	Temp
1	MC95 0341	20 °C	6	MC95	°C	11	MC95	°C
2	MC95	°C	7	MC95	°C	12	MC95	°C
3	MC95	°C	8	MC95	°C	13	MC95	°C
4	MC95	°C	9	MC95	°C	14	MC95	°C
5	MC95	°C	10	MC95	°C	15	MC95	°C

SAMPLE RECEIVING INCIDENT REPORT

Client Sample #'s Affected: _____ DCL Set I.D: _____

DCL Sample #'s Affected: _____

- ☐ Cooler Temps out of Range
- ☐ Missing Cooler
- ☐ Broken/Leaking Samples
- ☐ Missing Samples/Bottles
- ☐ Missing Paperwork
- ☐ Incorrect Preservation
- ☐ Low Sample Volume
- ☐ Incorrect Bottle Type
- ☐ Missing/Incorrect Bottle Labels
- ☐ Other

BRIEFLY DESCRIBE PROBLEM:

Delivered to: _____ Project Manager

Delivered by: _____ Signature/Date/Time

RESPONSE REQUIRED WITHIN 24 HOURS

PROJECT MANAGER'S COMMENTS:

Returned to Sample Receipt by: _____ (Date/Time/Signature)

Accepted for Sample Receipt by: _____ (Date/Time/Signature)

8/95

Project	FERMCO Emissions Tests
Project Manager	Keith Nicholson
Account Number	3025
Project Duration	1 Month

Mailby Days 20 days

Sample Stream	Project/ Method Type	QC Requirements			Preparation Requirements			Reporting Requirements			LOD/MDL/IDL Requirements		
$95	EPA Clean Air	**Inorganic**			**Inorganic**			Full CLP SOW			CLP SOW		
		Blank			CLP SOW			CLP Forms Only			SW-846 Rev.		
		LCS			SW-846 Rev.			CLP Disk			EPA Clean H2O		
		MS			USAEC 1990			RLIMS	X		USAEC 1990		
		MSD			USAEC 1993			Raw Data			USAEC 1993		
		MD			Microwave			Custom Disk			NIOSH		
		USAEC			Hotplate			ARF			DCL SOP		
		MSA			DCL SOP			QC Forms (specify below)	X		Client specified		
		Tracer			Other			Case Narrative	X		Other	x	Method
		Other			**Radiochemistry**			Calibration data	X		**QC Limits**		
		Radiochemistry			Hotplate leach			Continuing Cal. data			Method	X	
		Blank	X		Muffle furnace			Reporting Basis			Statistical		
		LCS	X		Total dissolution			IRDMIS			Client specified		
		MS	X	U only	Microwave			# of TICs					
		MSD	X	U only	DCL SOP			Counting Error (1 or 2 sigma)					
		Tracer			Other	X	Mthd. 114	TPU					
		Other	X	MD	**Organic**			RPD					
		Organic			CLP SOW			RER					
		Blank			SW-846 Rev.			Send raw data	X				
		LCS			USAEC 1990			Store raw data					
		MS/MSD			USAEC 1993			Other					
		USAEC			Sonication								
		Surrogate			Soxhlet								
		Other			Continuous								
					Separatory funnel								
					DCL SOP								
					Other								

David Robinson

Batch samples with other sets? (●) yes ( ) no
MS/MD/MSD sample identified? ( ) yes (●) no
Specific spiking levels identified? (●) Method ( ) DCL SOP ( ) other (see comments)

Comments: Analyze for U by EPA method 114 A-5, and by laser phosphoremetry - report results separately. Desired detection limits are 50 ug/sample for colorimetric U, and 1 ug/sample for phosphoremetry. Analyze for gamma, alpha, and beta for method 114 G-1, A-4 and B-4. Desired detection limits are 10 pCi for alpha and beta, a 20 pCi/sample as Cs-137 for gamma. Liquid samples and filters are to be analyzed for total particulates prior to other analyses. The client will specify how any compositing of liquid samples is to be conducted.

000058

2194

DATA CHEM LABORATORIES
A SORENSON COMPANY

Analytical Documentation
Inventory Checklist

- [NA] Copy of TCLP Preparation Logbook Pages
- [NA] Copy of Sample Preparation Notebook/Logbook Pages
- [X] Copy of Analyst's Notebook/Method Logbook Pages
- [NA] Copy of Instrument Injection Logbook/Instrument Logbook/Run Log Pages
- [NA] Percent Solids/Percent Moisture Results
- [NA] Copy of Reagent Logbook Pages
- [NA] Copy of Working Standard Preparation Logbook Pages
- [NA] Copy of Secondary or Intermediate Standard Preparation Logbook Pages
- [NA] Copy of Primary Standard or Concentrated Stock Standard Preparation Logbook Pages
- [NA] Certificates of Analysis for Standards
- [NA] Copy of Standard Verification Logbook Pages (including documentation for spiking solutions and calibration standards)
- [NA] Copy of Preparation Logbooks for solutions prepared by QC

All other miscellaneous documentation associated with this set (describe)

- [X] Copy of Conductivity Method page with QC target

Analytical Documentation
Reviewer Checklist

- X The Analytical Documentation Inventory Checklist above is complete.
- X Basic documentation procedures were followed in accordance with DCL SOP XX-DC-004 "Analytical Data Record Keeping."
- X All notebook and logbook pages contain page number, book number, title, and available space for pagination (if required).
- X All notebook and logbook pages were signed and dated by the analyst and reviewer before copying.
- X All copies are legible.
- NA Standard preparation is documented in accordance with DCL SOP XX-DC-019 "Standards Purity, Preparation, Traceability and Verification" or by WR-DC-001 "The Acquisition, Preparation, and use of Radioactive Standard Reference Materials."
- NA Documentation is provided to verify that standard calibration solutions and spiking solutions are traceable to a vendor certificate.

Assembled by: Cynthia Adams 06/16/95 (Signature, Date) Reviewed by: Suzanne W. Bowe 06/16/95 (Signature, Date)

DataChem Laboratories

Particulates
~~Total Residue~~ CA 06/15/95

Page 107 Book A 021

DCL Set ID	595-0498-BE
DCL Sample #	EO 3869-70, 72-73, 75-76, 79-80
DCL Accn't #	3025
Date Analysis Started	05/25/95
Balance #'s	105930 (Mettler AT 261) For 400mL beakers & 102839 (Sartorius)
LOD	10 mg/L
Method	~~EPA 160.3~~ CA 06/15/95 EPA METHOD 5 from CFR

Sample preparation: Clean beakers were rinsed with Type II water and placed in a 180°C oven for one hour. Beakers were removed and placed in desiccators to cool for 4 1/2 hours. Beakers were weighed in grams (the tare weight) and stored in desiccators CA 06/06/95 until ready for use. The water samples EO 3870, 73, 76, 80 were placed in the 400 mL beakers, ~~also~~ CA 06/06/95 placed in a 103°C CA 06/15/95 oven and allowed to evaporated overnight. The rest of the sample and rinsings were added the next day for EO 3873 and EO 3880. CA 06/06/95 All The entire sample was used and each sample container was rinsed three times with the appropriate matrix. The acetone samples EO 3869, CA 06/06/95 3872, 75, and 79 were poured into the 150 mL beakers and placed in a hood to evaporate. By the end of night shift all the sample and rinsings had been added. The samples were left in the hood till dryness and placed in 103-105°C oven early the next morning by SKP. The blank consists of 100 mL Type II water. The QC/LCS was 100 mL of PS-44K conductivity solution (413 umhos/cm. RICCA LOT E219 EXP 07/95). No acetone blank prepared.

Beaker #	Tare wt.	Sample #'s	wt. #1 (g)	wt. #2 (g)	wt #3 (g)	wt #4 (g)	wt #5 (g)	wt #6 (g)
1	175.0451	EO 3870	175.0426	175.0432	175.0442	175.0431	175.0443	175.0446
2	160.6076 80 CA 06/06/95	EO 3873	160.6144	160.6157	160.6153	NA	NA	NA
3	150.1550	EO 3876	150.1547	150.1550	NA	NA	NA	NA
4	157.6280	EO 3880	157.6270	157.6273	NA	NA	NA	NA
5	83.8590	BLK	83.8599 CA 06/06/95	83.8583	83.8595	83.8607	83.8580	83.8598
6	81.3255	QC/LCS	81.4003	81.4399 CA 07/30/95	81.4003	81.4009	81.3988	81.4007
7	81.6629 CA 06/06/95	EO 3872	81.6798	81.6778	81.6795	81.6798	NA	NA
8	79.8689	EO 3875	79.8778	79.8759	79.8770	79.8772	NA	NA
9	85.6009	EO 3879	85.6040	85.6026	85.6036	85.6046	85.6030	85.6045
10	87.3759	EO 3881 87 CA 07/06/95	87.3777	87.3766	87.3775	87.3779	NA	NA

Recorded by: Cynthia Adams 06/05/95 Date

Reviewed by: Suzanne D. Bowe 06/16/95 Date

DataChem Laboratories

Particulates ~~Total Residue~~ CA 06/15/95 Continued.

Page 108 Book A 021

Beaker #	Tare wt(g)	Sample #'s	wt #7(g)	wt #8(g)
5	83.8590	BLK	83.8578	83.8582
6	81.3255	QC/LCS	81.3985	81.3981
9	85.6009	EO 3879	85.6031	85.6028

Since the LCS was in water, the blank was also done in water.
The 400mL beakers were too heavy for the Sartorius balance; this is why two different balances were used. Samples were dried, cooled, desiccated and weighed until a constant weight is obtained (Two consecutive weighings agree within < 0.5mg of each other). No duplicates were analyzed since all sample was consumed.

Sample Calculations:

Total Residue, mg/L = $\frac{(A-B) \times 1000}{C}$ where A = weight of sample + dish in g
B = weight of dish in g
C = volume of sample in L

Sample volumes obtained by ~~measuring~~ CA 06/06/95 filling sample bottles to customer marked levels and then measuring that volume with a graduated cylinder.

EO 3869	216mL = 0.216L		EO 3875	240 mL	= 0.240L
EO 3870	370mL = 0.370L		EO 3876	349 mL	= 0.349L
EO 3872	154mL = 0.154L		EO 3879	230 mL	= 0.230L
EO 3873	440mL = 0.440L		EO 3880	430 mL	= 0.430L

		calculated	reported
Blank	[(83.8582g ~~85.6028g~~ − 83.8590g) X 1000] ÷ 0.1L	= −8 mg/L	= ND
QC/LCS	[(81.3981g − 81.3255g) X 1000] ÷ 0.1L	= 726 mg/L	= 730
EO 3869	[(87.3779g − 87.3759g) X 1000] ÷ 0.216L	= 9.3 mg/L	= ND
EO 3870	[(175.0446g − 175.0451g) X 1000] ÷ 0.370L	= −1.4 mg/L	= ND
EO 3872	[(81.6798g − 81.6629g) X 1000] ÷ 0.154L	= 109.7 mg/L	= 110
EO 3873	[(160.6153g − 160.6080g) X 1000] ÷ 0.440L	= 16.6 mg/L	= 20
EO 3875	[(79.8772g − 79.8689g) X 1000] ÷ 0.240L	= 34.6 mg/L	= 30
EO 3876	[(150.1550g − 150.1550g) X 1000] ÷ 0.349L	= 0 mg/L	= ~~NO~~ CA 06/06/95 ND
EO 3879	[(85.6028g − 85.6009g) X 1000] ÷ 0.230L	= 8.3 mg/L	= ND
EO 3880	[(157.6273g − 157.6280g) X 1000] ÷ 0.430L	= −1.63 mg/L	= ND

QC/LCS Recovery = 726/745.6 X 100 = 97.4 %

For QC target see page 6 of Book 2084

Recorded by: Cynthia Alamo 06/05/95 Date Reviewed by: Suzanne D. Bouk 06/15/95 Date

000061

Project No. 2 DATACHEM
TLE CONDUCTIVITY, OR SPECIFIC CONDUCTANCE Book No. 2084 LABORATORIES 6

rom Page No. NA

METHODS: EPA 120.1, EPA 9050, SOP-PNL-ASTM D1125 (12/91), MODIFIED AS DESCRIBED BELOW.

INSTRUMENT: ORION MODEL 160 CONDUCTIVITY METER. THIS INSTRUMENT CORRECTS FOR CELL CONSTANT AND TEMPERATURE, USING THE FOLLOWING SETTINGS: CELL CONSTANT: 0.609 cm^{-1} USING THE 016010 CELL.
TEMPERATURE: nLF (CORRECTS READING TO 25°C).

PROCEDURE: THE CELL AND TEST TUBE ARE RINSED THREE TIMES WITH EACH SAMPLE OR STANDARD BEFORE READING. FOR ANALYSIS, THE TUBE IS FILLED WITH ENOUGH SAMPLE TO COVER THE ELECTRODE.

QUALITY CONTROL REQUIREMENTS:
EPA 120.1: NONE SPECIFIED.
EPA 9050: CHECK STANDARD/15 SAMPLES, DUPLICATE/10 SAMPLES.
SOP-PNL-ASTM D1125: DUPLICATE/10 SAMPLES.
WHEN NOT OTHERWISE SPECIFIED, BLANKS, DUPLICATES, AND CHECK STANDARDS WILL BE ANALYZED ONCE PER 20 SAMPLES OR ANALYTICAL BATCH, WHICHEVER IS MORE FREQUENT.

STANDARDS: ALL THREE METHODS REQUIRE STANDARDS OF KCL IN WATER. PREPARATION REQUIREMENTS DIFFER SLIGHTLY, BUT THESE DIFFERENCES ARE NEGLIGIBLE CONSIDERING THE REPORTING LIMITS USED. THEREFORE, STANDARDS MADE FOLLOWING ONE METHOD ARE USED FOR ANY OF THE METHODS. ASTM D1125 DESCRIBES A SERIES OF STANDARDS; HOWEVER, THEY ARE USED TO DETERMINE THE CELL CONSTANT, WHICH IS ALREADY KNOWN FOR THIS INSTRUMENT. IN PRACTICE, AT LEAST ONE STANDARD PER RUN IS USED TO CHECK THE SYSTEM. STANDARDS MAY BE MADE AS FOLLOWS:

WATER TEMP.	g KCL*/L SOL'N	µmhos/cm AT 25°C FROM KCL (ADD WATER READING)	METHOD REFERENCE
25°C	0.7456	1413	EPA 120.1, 9050
20±2°C	7.4365	12,856	SOP-PNL-ASTM D1125
20±2°C	0.7440	1408.8	↓
20±2°C	100 mL OF THIS SOL'N. *(DRIED 2 HR. AT 105°C)	146.93	

HOLD TIME AND PRESERVATION: EPA 120.1 AND 9050 RECOMMEND 24 HOURS, HOWEVER, 28 DAYS IS USED AS THE MAXIMUM HOLD TIME, AS SPECIFIED BY THE EPA (SW-846, 3RD ED., REV. 0). WHEN POSSIBLE, SAMPLES ARE ANALYZED WITHIN 7 DAYS. SAMPLES SHOULD BE REFRIGERATED AND PROTECTED FROM GAIN OR LOSS OF DISSOLVED GASES.

To Page No. NA

Witnessed & Understood by me,	Date	Invented by	Date
Christine R Lui	09/08/92	Recorded by J. J. Bowe	09/03/92

DATA CHEM LABORATORIES
A SORENSON COMPANY

7194

Raw Data
Inorganic Department
Inventory Checklist

- [NA] Analytical protocol sheets
- [NA] Analysis summary sheets
- [NA] Instrument print-outs of the calibration standards and appropriate QC
- [NA] Instrument print-outs of each exposure or instrumental reading of the initial analysis
- [NA] Instrument print-outs of each exposure or instrumental reading of subsequent analyses
- [NA] Chromatograms and/or strip charts
- [NA] Analysis worksheets
- [NA] Muddle sheets or other calculation sheets

Raw Data
Inorganic Department
Reviewer Checklist

- X The Raw Data Inventory Checklist above is complete.
- NA Specific analytical protocols are followed for particular contract requirements.
- NA Print-outs of raw data are legible.
- NA Print-outs are dated and signed as required.
- NA Instrument ID# is recorded on raw data.
- NA Conditions of instrument setup are noted.
- NA Standard and reporting units are listed.
- NA Chromatograms and/or strip charts are labeled correctly.
- NA Cross-outs are performed as required (initialed and dated with an explanation if needed). No correction fluid or correction tape has been used on any raw data.
- NA Dilutions are clearly noted.
- NA All weights, dilution, and volumes used to obtain the reported values are recorded.
- NA Data not used are crossed off and the reason for non-use is explained sufficiently.

000063

Assembled by: Cynthia Adams (Signature) 06/06/95 (Date) Reviewed by: Suzanne W. Bowe (Signature) 06/16/95 (Date)

3/95

Filter # 0445 HEG Task # _____

Date/Time Dessicated 10/25/94 1500 Project # _____

Date/Time/Analyst 10/26/94 1500 [illegible] Tare Wt. 405.8 mg.
Date/Time/Analyst 10/26/94 1130 [illegible] Tare Wt. 405.8 mg.
Date/Time/Analyst _____ Tare Wt. _____ mg.
Date/Time/Analyst _____ Tare Wt. _____ mg.

Avg = 405.8

Filter # 0446 HEG Task # _____

Date/Time Dessicated 10/25/94 1500 Project # _____

Date/Time/Analyst 10/26/94 1500 [illegible] Tare Wt. 406.3 mg.
Date/Time/Analyst 10/27/94 1130 [illegible] Tare Wt. 406.3 mg.
Date/Time/Analyst _____ Tare Wt. _____ mg.
Date/Time/Analyst _____ Tare Wt. _____ mg.

Avg = 406.3

Filter # 0447 HEG Task # _____

Date/Time Dessicated 10/25/94 1500 Project # _____

Date/Time/Analyst 10/26/94 1500 [illegible] Tare Wt. 405.6 mg.
Date/Time/Analyst 10/27/94 1130 [illegible] Tare Wt. 405.7 mg.
Date/Time/Analyst _____ Tare Wt. _____ mg.
Date/Time/Analyst _____ Tare Wt. _____ mg.

Avg = 405.6

Filter # 0448 HEG Task # _____

Date/Time Dessicated 10/25/94 1500 Project # _____

Date/Time/Analyst 10/26/94 1500 [illegible] Tare Wt. 403.6 mg.
Date/Time/Analyst 10/27/94 1130 [illegible] Tare Wt. 403.8 mg.
Date/Time/Analyst _____ Tare Wt. _____ mg.
Date/Time/Analyst _____ Tare Wt. _____ mg.

Avg = 403.7

HAYDEN ENVIRONMENTAL GROUP, INC.

7194

Filter # 000227 HEG Task # _____

Date/Time Dessicated 3-1-95 1530 Project # _____

Date/Time/Analyst 3/7/95 1545 Tare Wt. 404.8 mg.
Date/Time/Analyst 3/10/95 1000 Tare Wt. 404.9 mg.
Date/Time/Analyst _____ Tare Wt. _____ mg.
Date/Time/Analyst _____ Tare Wt. _____ mg.

Avg = 404.8

Filter # 000228 HEG Task # _____

Date/Time Dessicated 3-1-95 1530 Project # _____

Date/Time/Analyst 3/7/95 1545 Tare Wt. 414.1 mg.
Date/Time/Analyst 3/10/95 1000 Tare Wt. 414.1 mg.
Date/Time/Analyst _____ Tare Wt. _____ mg.
Date/Time/Analyst _____ Tare Wt. _____ mg.

Avg = 414.1

Filter # 000229 HEG Task # _____

Date/Time Dessicated 3-1-95 1530 Project # _____

Date/Time/Analyst 3/7/95 1545 Tare Wt. 409.3 mg.
Date/Time/Analyst 3/10/95 1000 Tare Wt. 409.4 mg.
Date/Time/Analyst _____ Tare Wt. _____ mg.
Date/Time/Analyst _____ Tare Wt. _____ mg.

Avg = 409.4

Filter # 000230 HEG Task # _____

Date/Time Dessicated 3-1-95 1530 Project # _____

Date/Time/Analyst 3/7/95 1545 Tare Wt. 418.5 mg.
Date/Time/Analyst 3/10/95 1000 Tare Wt. 418.5 mg.
Date/Time/Analyst _____ Tare Wt. _____ mg.
Date/Time/Analyst _____ Tare Wt. _____ mg.

Avg = 418.5

HAYDEN ENVIRONMENTAL GROUP, INC.

7194

DATA CHEM LABORATORIES
A Sorenson Company

ANALYTICAL REPORT

Form ARF-AL
Page 1 of 2
Part 1 of 1

JUN 6 1995

Date

Agency Identification Number S95-0498-AE
Account No. 03025

Hayden Environmental Group, Inc.
561 Congress Park Drive
Dayton, OH 45459
Attention: David Robinson

FAX (513) 438-3000
Telephone (513) 438-3010

Sampling Collection and Shipment

Sampling Site Rel# 1000006737 Date of Collection May 09, 1995

Date Samples Received at Laboratory May 18, 1995

Analysis

Method of Analysis Gravimetric

Date(s) of Analysis June 05, 1995

Analytical Results

Field Sample Number	Laboratory Number	Sample Type	Gross Weight grams								
REAG BLK	EO 3868	FILTER	0.407								†
EO-1	EO 3871	FILTER	0.400								†
LO-1	EO 3874	FILTER	0.405								†
FLD BLK	EO 3877	FILTER	0.420								†
Limit of Detection			NA								

† See comment on last page.
ND Parameter not detected.
NR Parameter not requested.
** See comment on last page.
( ) Parameter between LOD and LOQ.

Analyst: Jim L. Gale

Reviewer: Robert L. Quigley

Laboratory Supervisor: Patricia A. Klinger

000055

DATA CHEM LABORATORIES
A Sorenson Company

ANALYTICAL REPORT

JUN 8 1995

Date _____

Agency Identification Number S95-0498-AE

General Set Comments

The samples in this set were collected on 70 mm glass fiber filters that have no tare weights. The samples were analyzed for gross weight and reported in grams. Note: Glass fiber filters are not recommended for total weight analysis.

Sample Comments

Laboratory Number	-- Comment --
EO 3868	See set comment.
EO 3871	See set comment.
EO 3874	See set comment.
EO 3877	See set comment.

960 West LeVoy Drive / Salt Lake City, Utah 84123-2547 / (801) 266-7700
A Sorenson Company

Results due by: 7-Jun-1995

Project/Job/Task: COMM-ENV	Split:	Root Set ID: S95-0498 *	Reporting Group	AE									#
Client: Hayden Environmental Group, Inc.		Account: 03025	Analysis	Particulates									Bottles
Comments:													
Verified: AMG 5-23-95													

Date Sampled	Field ID Number	DCL Sample Name	DCL Sample ID	QC	Matrix																				
11-May-1995	REAG BLK	EO 3868			FILTER							X													1
10-May-1995	EO-1	EO 3871			FILTER							X													1
9-May-1995	LO-1	EO 3874			FILTER							X													1
11-May-1995	FLD BLK	EO 3877			FILTER							X													1

Received: Date/Time/Signature 5-18-95/1000 /Mary Ann McGuire

ORIGINAL FIELD SAMPLE CHAIN-OF-CUSTODY				SAMPLE PREPARATION / ANALYSIS CHAIN-OF-CUSTODY Sample Prep/Analysis for: _____ Lab Notebook No.: _____ Prepared/Analyzed by: _____ Date/Time: _____			
Relinquished By: (Signature)	Date/Time	Received By: (Signature)	Reason for Transfer/ Storage Location	Relinquished By: (Signature)	Date/Time	Received By: (Signature)	Reason for Transfer/ Storage Location
Mary Ann McGuire	5-23-95 1700	KATHLEEN R-23-1	STORAGE R-23-1				
R-23-1 CA	05/25/95 17:00	Cynthia Adams	analysis R-403-1 ~~Bldg 408~~ 5/25/95				
Cynthia Adams	05/30/95	J. Cole	analysis				
J. Cole	5/31/95 1230	RCL RM 311 DR	storage				

Check box if there is a continuation page ☐

Printed 5/23/1995 16:41

Form: COFC1.01-SWV2.30

000068

7194

7194

Sample Work Order

QC Clearance: _____
Project Manager: Keith R. Nicholson
Client: Hayden Environmental Group, Inc.
Account: 03025
Project/Task: COMM-ENV
Date Received: 18-May-1995
Date for Mailing Report: 7-Jun-1995

DCL Root Set ID: S95-0498 *
DCL Lab. Name: EO 3868–EO 3877
Total # Samples: 4
Sample Medium: FILTER

Earliest Sampling Date: 9-May-1995
Preparation Type:

Rep. Group	Minerals Analysis Analytes Requested	Latest Prep. Date	Latest Anal. Date	No. of Samp.	Split ID	Storage Location	Analysis/Prep. Method	Inst.	
AE	~~Particulates~~ total weight			4		Rab lab	GRAV	GRAV	

Special Instructions: Gross wt if no tare wts avail.

Section Manager Approval: [signature] 5/24/95
Patricia A. Klinger — Date

~~it appears that total weights have already been done — see pg 1 Tally sheet. Therefore, the samples were passed onto Rad Chem on 5/30/95~~ [signature]

Use 6K filter as a blank corr. factor for determining tot. wt. of the other filters.

EO 3868 0.407, 0.407
71 0.400, 0.399
74 0.404, 0.405
K 77 0.419, 0.420

70mm GFF

QC 35659 (37mm GFF) 0.0747g, 0.0747g

000069

Other Sections Receiving Sample Portions: IW, WA

DataChem Laboratories/ 960 West LeVoy Drive / Salt Lake City, Utah 84123

Form: WO1.04-SWV2.12 PRINTED 5/23/1995 16:49

Earliest Sampling Date: 9-May-1995

DataChem Laboratories
CHAIN-OF-CUSTODY

Results due by: 7-Jun-1995

Project/Job/Task: COMM-ENV | Split: | Root Set ID: S95-0498 * | Reporting Group

Client: Hayden Environmental Group, Inc. | Account: 03025

Comments:

Verified: AM 5-23-95

Date Sampled	Field ID Number	DCL Sample Name	DCL Sample ID	QC	Matrix					Analysis		AE Particulates									# Bottles
11-May-1995	REAG BLK	EO 3868			FILTER							X									1
10-May-1995	EO-1	EO 3871			FILTER							X									1
9-May-1995	LO-1	EO 3874			FILTER							X									1
11-May-1995	FLD BLK	EO 3877			FILTER							X									1

Received: Date/Time/Signature 5-18-95 1000 Hmarylt McGuire

ORIGINAL FIELD SAMPLE CHAIN-OF-CUSTODY				SAMPLE PREPARATION / ANALYSIS CHAIN-OF-CUSTODY Sample Prep/Analysis for: _____ Lab Notebook No.: _____ Prepared/Analyzed by: _____ Date/Time: _____			
Relinquished By: (Signature)	Date/Time	Received By: (Signature)	Reason for Transfer/ Storage Location	Relinquished By: (Signature)	Date/Time	Received By: (Signature)	Reason for Transfer/ Storage Location
Hmarylt McGuire	5-23-95 1700	WATKINS R-23-1	STORAGE R-23-1				

Check box if there is a continuation page ☐

Printed 5/23/1995 16:41

Form: COFC1.01-SWV2.30

000070

7194

OFF-SITE LABORATORY CUSTODY TRANSFER AND ANALYSIS REQUEST RECORD (OCTR)

PURCHASE ORDER NO.: 95-H053	OFF-SITE LAB CONTACT: KEITH NICHOLSON	REPORT TO: FERMCO, P.O. BOX 398704, CINCINNATI, OH 45239-8704
RELEASE NO.: 1000006737	FERMCO CONTACT/PHONE: RICH DAIN (513) 738-9157	
SAMPLE SHIPMENT DATE: 5-17-95	REQUIRED REPORT DATE: PER CONTRACT (NORMAL)	RECEIVING LAB NAME: DATACHEM
SAMPLE SHIPPER: M. CORNELL	SAMPLE TEAM: EFFL. MON. & CNTL	RECEIVING LAB ADDRESS: 960 W. LEVOY DR. SALT LAKE CITY, UT 84123

	SAMPLE NUMBER		SAMPLE DESCRIPTION/TYPE/CODE	DATE/TIME COLLECTED	CONTAINER TYPE	SAMPLE VOLUME	PRESERVATION	ANALYSIS REQUESTED	CONDITION UPON RECEIPT*
1	200153657	REAG. BLK.	G.F. FILTER	5/11/95 1030	PETRI DISH	1 x FLTR	NONE	* PARTICULATES ED 3868	ALPHA SPECS ED 3881
2	200153662	REAG. BLK.	ACETONE	5/11/95 1030	PLASTIC	1 x 1L	NONE	* 3869	
3	200153666	REAG. BLK.	D.I. WATER	5/11/95 1030	PLASTIC	1 x 1L	NONE	* 3870	
4	200153658	EO-1	G.F. FILTER	5/10/95 0930	PETRI DISH	1 x FLTR	NONE	* 3871	3882
5	200153663	EO-1	ACETONE	5/10/95 0930	PLASTIC	1 x 1L	NONE	* 3872	
6	200153667	EO-1	D.I. WATER	5/10/95 0930	PLASTIC	1 x 1L	NONE	* 3873	
7	200153659	LO-1	G.F. FILTER	5/9/95 1450	PETRI DISH	1 x FLTR	NONE	* 3874	3883
8	200153664	LO-1	ACETONE	5/9/95 1450	PLASTIC	1 x 1L	NONE	* 3875	
9	200153668	LO-1	D.I. WATER	5/9/95 1450	PLASTIC	1 x 1L	NONE	* 3876	
10	200153660	FLD BLK	G.F. FILTER	5/11/95 1030	PETRI DISH	1 x FLTR	NONE	* 3877	3884
11	200153665	FLD BLK	ACETONE	5/11/95 1030	PLASTIC	1 x 1L	NONE	* 3879	

CAN SEAL NO. 2470

SPECIAL INSTRUCTIONS: TOTAL U ANALYSES ARE TO BE PERFORMED BY LASER PHOSPHORMETRY & EITHER COLORMITY OR FLOWOMETRY (AS LISTED IN METHOD 114)

* = TOTAL U (CE); GROSS A/B (DE); PARTICULATES (AE, BE); GAMMA SCAN (EE)

SAMPLE PLAN NUMBER:	PROJECT NAME:	CHARGE NUMBER:
N/A	PERIODIC CONFIRMATORY MSMTS.	7 ECB2

CAN NO.:	SEAL NO.:	CAN NO.:	SEAL NO.:	CAN NO.:	SEAL NO.:	CAN NO.:	SEAL NO.:	CAN NO.:	SEAL NO.:	CAN NO.:	SEAL NO.:
				CAN 5-17-95 COOLER	SEALED	w/ C-O-C	TAPE				

RELINQUISHED			RECEIVED		
RELINQUISHED BY	DATE	TIME	DATE	TIME	RECEIVED BY
1. Mark Cornell	5-17-95	1300	1. 5-18-95	1000	Stephanie Smith
2. Stephanie Smith	5-18-95	1030	2. 5-18-95	1035	Amaryllis McGuire
3.			3.		

NO.	DISTRIBUTION OF COPIES	
1	WHITE	REMAIN WITH SAMPLES
2	YELLOW	OFF-SITE LAB
3	PINK	FERMCO DATA REVIEW AND REPORTING
4	BLUE	ORIGINATOR

*IF SEALS ARE BROKEN, CONTACT THE FERMCO CONTACT LISTED ABOVE IMMEDIATELY.

000074

2194

PURCHASE ORDER NO.: 95-H053	OFF-SITE LAB CONTACT: KEITH NICHOLSON	REPORT TO: FERMCO P.O. BOX 398704 CINCINNATI, OH 45239-8704
RELEASE NO.: 1000006737	FERMCO CONTACT/PHONE: RICH DAIN (513) 738-9157	
SAMPLE SHIPMENT DATE: 5-17-95	REQUIRED REPORT DATE: PER CONTRACT (NORMAL)	RECEIVING LAB NAME: DATACHEM
SAMPLE SHIPPER: M. CORNELL	SAMPLE TEAM: EFF. MON. & CNTL	RECEIVING LAB ADDRESS: 960 W. LEVOY DR. SALT LAKE CITY, UT. 84123

	SAMPLE NUMBER	SAMPLE DESCRIPTION/TYPE/CODE	DATE/TIME COLLECTED	CONTAINER TYPE	SAMPLE VOLUME	PRESERVATION	ANALYSIS REQUESTED	CONDITION UPON RECEIPT*
1	200153669 FLD BLK	D.I. WATER	5/11/95 1030	PLASTIC	1 x 1L	NONE	~~PARTICULATES~~ *ED 3880	~~ANALYSIS~~ ED 3884
2							CAN SEAL NO: 2970	
3								
4								
5								
6								
7								
8								
9								
10								
11								

LAST ENTRY MMC 5-17-95

SPECIAL INSTRUCTIONS: TOTAL U ANALYSES ARE TO BE PERFORMED BY LASER PHOSPHORMETRY & EITHER COLORMITY OR FLOUOMETRY (AS LISTED IN METHOD 114)

*= TOTAL U; GROSS A/B; PARTICULATES; GAMMA SCAN

SAMPLE PLAN NUMBER: N/A	PROJECT NAME: PERIODIC CONFIRMATORY MSMTS.	CHARGE NUMBER: 7 ECB 2

CAN NO.:	SEAL NO.:	CAN NO.:	SEAL NO.:	CAN NO.:	SEAL NO.:	CAN NO.:	SEAL NO.:	CAN NO.:	SEAL NO.:	CAN NO.:	SEAL NO.:

MMC 5-17-95 CAN COOLER SEALED W/C-O-C TAPE

RELINQUISHED			RECEIVED		
RELINQUISHED BY	DATE	TIME	DATE	TIME	RECEIVED BY
1. Mark Cornell	5-17-95	1300	1. 5-18-95	1000	Stephanie Smith
2. Stephanie Smith	5-18-95	1030	2. 5-18-95	1035	Amaly Lis McDowell
3.			3.		

NO.	DISTRIBUTION OF COPIES	
1	*WHITE*	REMAIN WITH SAMPLES
2	*YELLOW*	OFF-SITE LAB
3	*PINK*	FERMCO DATA REVIEW AND REPORTING
4	*BLUE*	ORIGINATOR

*IF SEALS ARE BROKEN, CONTACT THE FERMCO CONTACT LISTED ABOVE IMMEDIATELY.

FS-F-3366 (REV. 12/31/92)

2100072

7194

HAYDEN

DEN
NTAL GROUP, INC.

Post-it® Fax Note 7671	Date 11-21-94 # of pages ▶ 8
To Customer Service	From D. Robinson
Co./Dept.	Co.
Phone #	Phone #
Fax # 801-268-9292	Fax #

November 21, 1994

Customer Service
DataChem Laboratories
960 West Levoy Drive
Salt Lake City, UT 84123

Subject: Laboratory Services / Subcontracting
FERMCO RFP # PES-80706

Dear Sir or Madam:

We are submitting a proposal in response to the above request and would like to receive a quotation from your firm for laboratory services. Your firm's name was given to us by FERMCO as a qualified subcontract laboratory.

We request a firm, fixed cost proposal to provide analytical support for the scope of work included with this letter. To summarize the analytical scope of work:

1. Provide analysis by USEPA Method 5 (40CFR Part 61) for three field samples from Source EP8-013 and one field sample from EP11-002. Filter, probe rinse (Acetone), and backhalf (H_2O) samples will be included as well as quality control samples (see below). Samples are to be analyzed for total particulate.

2. Following particulate analysis, the fractions for each field sample shall be composited and analyzed to total activity and uranium per EPA Method 114, and according to the protocol shown in Table 2 of the scope of work.

3. Proposed cost shall include cost to analyze and report results for all field samples and quality control samples. Quality control samples to be included in the sample sets:

   - Performance evaluation sample, to be supplied by FERMCO, and analyzed for total Uranium in the same manner as the composites (Item 6, scope of work).

   - Two field blank acetone rinse samples, two field blank filters, two laboratory filter blanks (supplied by Hayden), laboratory matrix spike/spike duplicate, and two container blanks.

TALLY SHEET

RELEASE #: 1000006737 (Can 1 of 1)
PO #: 95-H053 (DCL-SLC)
DATE SHIPPED: 17-May-95
MATERIAL: Periodic Confirmatory Measurements – Filters, Acetone, Water

ANALYSIS: Total U; Gross A/B; Particulates; Gamma Scan

Composite Sample Number	Lot Number	Sample Container Size	AnaLis/ FACTS Number	Gross Weight lbs.	Tare Weight lbs.	Net Weight lbs.
REAG. BLK.	W050-725-P047-6737	PETRI DISH	200153657	0.106	0.088	0.018
REAG. BLK.	W050-725-P047-6737	1L PLST	200153662	0.511	0.141	0.370
REAG. BLK.	W050-725-P047-6737	1L PLST	200153666	0.943	0.141	0.802
EO-1	W050-725-P047-6737	PETRI DISH	200153658	0.106	0.088	0.018
EO-1	W050-725-P047-6737	1L PLST	200153663	0.423	0.141	0.282
EO-1	W050-725-P047-6737	1L PLST	200153667	1.128	0.141	0.987
LO-1	W050-725-P047-6737	PETRI DISH	200153659	0.101	0.088	0.013
LO-1	W050-725-P047-6737	1L PLST	200153664	0.542	0.141	0.401
LO-1	W050-725-P047-6737	1L PLST	200153668	0.934	0.141	0.793
FLD. BLK.	W050-725-P047-6737	PETRI DISH	200153660	0.106	0.088	0.018
FLD. BLK.	W050-725-P047-6737	1L PLST	200153665	0.476	0.141	0.335
FLD. BLK.	W050-725-P047-6737	1L PLST	200153669	1.163	0.141	1.022
				6.537	1.480	5.057

7194

FEMP	RADIOLOGICAL SURVEY REPORT COVER SHEET		SURVEY NUMBER: 95-05-G1-194	
DATE: 5-17-95	LOCATION: Lab	RO [redacted]	BADGE: 10148	PAGE: 1 OF 4
TIME: 0700	LEVEL: 580-	SIGNATURE: [redacted]		
WORK PERMIT NUMBER: N/A		REVIEWER: [redacted]	BADGE:	
RWP NUMBER:		SIGNATURE:	DATE:	

ATTACHMENTS:		
3	Pg 2 MURF	
	Pg 3 & 4 Teunelco Printout	

REASON FOR SURVEY	
	Sample surveyed for release to go offsite. Gross area smears taken. Direct frisk inside drum
	Release # ~~[illegible]~~ 6737 N/A

SUMMARY:

N/A

No.	Distribution of Copies
1	Radiological Records
2	Files

Supervisor Notified	Time	Date	Notified by:
			000075

FS-F-1993-0 (REV. 04/18/95)

SURVEY 95-05-G11-194

DATE:	LOCATION:	RC[redacted]	[redacted]	BADGE #:
5-17-95	Lab			10148/721

MODEL #	SERIAL NUMBER	TYPE ALPHA or BETA/GAMMA	DUE DATE	(CPM)	CF	(DPM)	BMP/PERFORMANCE TEST YES	NO
LB5100	7	α, β, γ	6-95	.2/1.72	.289/.418	18.2/19.8	X	
M-3	77101	β, γ	10-95	60	30	3K	X	
			N					
				A				

TIME	RCT INIT	MATERIAL DESCRIPTION	RELEASE CRITERIA SURF or VOL	RESULTS ALPHA REMOVABLE	ALPHA FIXED + REM	BETA/GAMMA REMOVABLE	BETA/GAMMA FIXED + REM	RELEASE JUSTIFICATION	RECIPIENT	MATERIAL RELEASE EVALUATOR BADGE # and SIGNATURE (1)
0700	bo/DC	200153667	SURF	-0 *	N/A	0 *	<MDCP		Doug Stack	
		200153668		2 *		4 *	<MDCP			
		200153669		2 *		4 *	<MDCP			
		200153666		-0 *		4 *	<MDCP			
		200153662		-0 *		0 *	< MDCP			
		200153665		-0 *		-1 *	< MDCP			
		200153664		2 *		-1 *	< MDCP			
		200153663		2 *		8 *	< MDCP			
		200153658 (AF)		-0 *		0 *	< MDCP	*		N/A
		200153659 (AF)		5 *		-1 *	< MDCP	*		
		200153660 (AF)		-0 *		0 *	< MDCP	*		
		200153657 (AF)		2 *		0 *	< MDCP	*		
		10 gal Can		-0 *		0 *	< MDCP			
					N					
						A				

Comments: Release # 6737 * M:ESH:RCRC: 93 613

(AF) = Air Filter

REVIEW:	INITIAL	DATE

000076

(1) Material Release Evaluator approval required in accordance with RC-DPT-019, (Release of Materials from the Fernald Environmental Management Project), if any of the following conditions exist:

a. Material has areas which are inaccessible for proper survey.
b. Process knowledge is used to support the release decision.
c. Material must be evaluated for the potential of contamination beneath any coating applied while the material was in the Controlled Area.
d. Material must be evaluated for the potential for any volume or in-depth radioactivity within the material matrix.
e. Special case items are being released, such as radioactive consumer products, industrial sources, etc.
f. Material has detectable activity present and the activity is below the contamination limits listed in Attachment A of RC-DPT-019.

FS-F-3915 (06/22/94) equil.

7194

MAY 17, 1995 08:57:36 - 7194

P A SYSTEM #7 SMEARS FOR FREE RELEASE (1.1 MIN)

LE ER	GROSS ALPHA	GROSS B-g	REMOV. dpm_a	REMOV. dpm_B-g	TIME OF COUNT
1	0	2	-0	0	08:58:45
2	1	4	2	4	09:00:06
3	1	4	2	4	09:01:27
4	0	4	-0	4	09:02:48
5	0	2	-0	0	09:04:10
6	0	1	-0	-1	09:05:30
7	1	1	2	-1	09:06:51
8	1	6	2	8	09:08:13
9	0	2	-0	0	09:09:34
0	2	1	5	-1	09:10:55
1	0	2	-0	0	09:12:16
2	1	2	2	0	09:13:37
~~2~~	~~0~~	~~5~~	~~-0~~	~~6~~	~~09:14:58~~ bad 5-17-95

ATION COMPLETE

FEMP RADIOLOGICAL SURVEY REPORT pg 3 of 4
SURVEY # 9505-G11-194 DATE 5-17-95
(NAME) (Signature)
BY Dunlap/D. Hesse/ BURL/D Wendl

AY 17, 1995 10:04:45 WE
A SYSTEM #7 SMEARS FOR FREE RELEASE (1.1GMIN)

E R	GROSS ALPHA	GROSS B-g	REMOV. dpm_a	REMOV. dpm_B-g	TIME OF COUNT
	0	2	-0	0	10:05:55

TION COMPLETE

FEMP RADIOLOGICAL SURVEY REPORT pg 4 of 4
SURVEY # 95-05-G11-194 DATED 5-15-95

	(name)	(signature)
RCT:	[illegible]	[illegible]
REVIEWER:		

000078

I 2

on: ER 26 05/17/19 95

26 ACETONE, 3, UN 1090, II

POTENTIAL HAZARDS

R EXPLOSION

able/combustible material; may be ignited by heat, sparks or flames.
s may travel to a source of ignition and flash back.
iner may explode in heat of fire.
explosion hazard indoors, outdoors or in sewers.
f to sewer may create fire or explosion hazard.

HAZARDS

e poisonous if inhaled or absorbed through skin.
s may cause dizziness or suffocation.
ct may irritate or burn skin and eyes.
may produce irritating or poisonous gases.
f from fire control or dilution water may cause pollution.

EMERGENCY ACTION

unnecessary people away; isolate hazard area and deny entry.
upwind; keep out of low areas.
ive pressure self-contained breathing apparatus (SCBA) and
ctural firefighters' protective clothing will provide limited
ection.
te for 1/2 mile in all directions if tank, rail car or tank truck is
lved in fire.
Emergency Response Telephone Number on Shipping Paper first.
ipping Paper not available or no answer, CALL CHEMTREC AT
)-424-9300.
ter pollution occurs, notify the appropriate authorities.

Fires: Dry chemical, CO2, water spray or alcohol-resistant foam.
use dry chemical extinguishers to control fires involving
methane or nitroethane.
Fires: Water spray, fog or alcohol-resistant foam.
ontainer from fire area if you can do it without risk.
cooling water to sides of containers that are exposed to flames
well after fire is out. Stay away from ends of tanks.
ssive fire in cargo area, use unmanned hose holder or monitor
es; if this is impossible, withdraw from area and let fire burn.
aw immediately in case of rising sound from venting safety device
y discoloration of tank due to fire.

R LEAK

ff ignition sources; no flares, smoking or flames in hazard area.
eak if you can do it without risk.
spray may reduce vapor; but it may not prevent ignition in closed
s.

Small Spills: Take up with sand or other noncombustible absorbent material and place into containers for later disposal.
Large Spills: Dike far ahead of liquid spill for later disposal.

IRST AID

Move victim to fresh air and call emergency medical care; if not breathing, give artificial respiration; if breathing is difficult, give oxygen.
In case of contact with material, immediately flush eyes with running water for at least 15 minutes. Wash skin with soap and water.
Remove and isolate contaminated clothing and shoes at the site.

Date: 5-18-95 Survey Type: Meter: ✓ Smear: ✓ Leak Test: Approved: RSO Date:

By: MM

Survey Instrument:

Manufacturer: LUDLUM
Model Number 19
Serial Number: ~~102872~~ 102872
Calib. Date: 9-30-94

FERMCO mm 5-18-95
~~MX-0199~~ IH.

BACKGROUND <0.011 mR/hr

Scintillation Counter:

Manufacturer: Ludlum
Model Number: 2929
Lab Instrument No.: 108227

Sample Count Time - 1 min.

	ALPHA	BETA
BLANK (CPM)	0.08	65.03
COUNTER EFFICIENCY (%)	0.3517	0.4083

Mixed Waste Lab Survey Location or Sealed Source Number	Instrument Reading	Disc Smears/Leak Test Swipes						Remarks
		Alpha			Beta			
		CPM	DPM	µCi	CPM	DPM	µCi	
M095 0341 OUTSIDE	<0.012 mR/hr	0			68			<0.011 mR/hr @ METER
INSIDE	<0.012	0			63			
SAMPLE	<0.012	0			71			

000081

2194

5 7194

DATACHEM LABORATORIES COOLER RECEIPT CHECKLIST

Client Name: FERMCO

Project/Task/Site: REL. #: 6737

Time/Date of Receipt: 1000 5-18-95

Coolers Received: 1

Custody Seals?: (Circle) Present/Absent*

Intact/Broken*

Tamper Evident: Yes/No

Condition of Coolers: Acceptable/Unacceptable

Comments on Cooler Condition (#6)

1 DRUM

8. Ice Present: Yes/No*

Frozen/Melted

Comments: RAD CHEM ONLY

9. Temp Control: Present/Not Included

10. Location Temp Taken: Control/Between Samples

11. Taken by: (Signature)

MARK MENDENHALL (Printed Name)

5-18-95 1130 (Date/Time)

12. Are all temperatures within project specific guidelines?

Yes/No*

NTACT PROJECT MANAGER. COMPLETE INCIDENT REPORT.

ler ived	DCL Cooler #	Temp	Cooler Received	DCL Cooler #	Temp	Cooler Received	DCL Cooler #	Temp
	MC95 0341	20 °C	6	MC95	°C	11	MC95	°C
2	MC95	°C	7	MC95	°C	12	MC95	°C
3	MC95	°C	8	MC95	°C	13	MC95	°C
4	MC95	°C	9	MC95	°C	14	MC95	°C
5	MC95	°C	10	MC95	°C	15	MC95	°C

SAMPLE RECEIVING INCIDENT REPORT

nt Sample #'s Affected: _____ DCL Set I.D: _____

. Sample #'s Affected: _____

Cooler Temps out of Range
Missing Cooler
roken/Leaking Samples
Missing Samples/Bottles

- ☐ Missing Paperwork
- ☐ Incorrect Preservation
- ☐ Low Sample Volume
- ☐ Incorrect Bottle Type
- ☐ Missing/Incorrect Bottle Labels
- ☐ Other

EFLY DESCRIBE PROBLEM:

Delivered to: _____ Project Manager

Delivered by: _____ Signature/Date/Time

RESPONSE REQUIRED WITHIN 24 HOURS

OJECT MANAGER'S COMMENTS:

rned to
ple Receipt by: _____ (Date/Time/Signature)

Accepted for
Sample Receipt by: _____ (Date/Time/Signature)

8/95

000082

Project	FERMCO Emissions Tests
Project Manager	Keith Nicholson
Account Number	3025
Project Duration	1 Month

Date 3/17/95

Mailby Days 20 days

Sample Stream	Project/ Method Type
595	EPA Clean Air

QC Requirements

Inorganic		
Blank		
LCS		
MS		
MSD		
MD		
USAEC		
MSA		
Tracer		
Other		
Radiochemistry		
Blank	X	
LCS	X	
MS	X	U only
MSD	X	U only
Tracer		
Other	X	MD
Organic		
Blank		
LCS		
MS/MSD		
USAEC		
Surrogate		
Other		

Preparation Requirements

Inorganic		
CLP SOW		
SW-846 Rev.		
USAEC 1990		
USAEC 1993		
Microwave		
Hotplate		
DCL SOP		
Other		
Radiochemistry		
Hotplate leach		
Muffle furnace		
Total dissolution		
Microwave		
DCL SOP		
Other	X	Mthd. 114
Organic		
CLP SOW		
SW-846 Rev.		
USAEC 1990		
USAEC 1993		
Sonication		
Soxhlet		
Continuous		
Separatory funnel		
DCL SOP		
Other		

Reporting Requirements

Full CLP SOW		
CLP Forms Only		
CLP Disk		
RLIMS	X	
Raw Data		
Custom Disk		
ARF		
QC Forms (specify below)	X	
Case Narrative	X	
Calibration data	X	
Continuing Cal. data		
Reporting Basis		
IRDMIS		
# of TICs		
Counting Error (1 or 2 sigma)		
TPU		
RPD		
RER		
Send raw data	X	
Store raw data		
Other		

LOD/MDL/IDL Requirements

CLP SOW		
SW-846 Rev.		
EPA Clean H2O		
USAEC 1990		
USAEC 1993		
NIOSH		
DCL SOP		
Client specified		
Other	X	Method
QC Limits		
Method	X	
Statistical		
Client specified		

David Robinson

Batch samples with other sets?	(●) yes ( ) no
MS/MD/MSD sample identified?	( ) yes (●) no
Specific spiking levels identified?	(●) Method
	( ) DCL SOP
	( ) other (see comments)

Comments: Analyze for U by EPA method 114 A-5, and by laser phosphoremetry - report results separately. Desired detection limits are 50 ug/sample for colorimetric U, and 1 ug/sample for phosphoremetry. Analyze for gamma, alpha, and beta for method 114 G-1, A-4 and B-4. Desired detection limits are 10 pCi for alpha and beta, a 20 pCi/sample as Cs-137 for gamma. Liquid samples and filters are to be analyzed for total particulates prior to other analyses. The client will specify how any compositing of liquid samples is to be conducted.

000083

2194

7194

DataChem Laboratories

PROJECT RESOURCE UTILIZATION SUMMARY

te: 5/31/85

L Reference #: 585-458-AE

npany/Agency Name: Hayden Envir.

alytes/Method: GRAV.

BOR

Date	Personnel	Total Hours
5/31/85	[illegible]	1.5
6/6/85	R. [illegible]	15 min.

PPLIES

Item	Quantity

UIPMENT USAGE

Major Instrumentation	Total Hours
Sartorius Basic	.2

000084

DATA CHEM
LABORATORIES
A SORENSON COMPANY

DataChem ID # 595-0498-AE

Analyte TOT-WT.

Filter Type GFF

Analyst Roy

Instrument Saturn R100

Method Gravimetric

Date Analyzed 5/31/95

Results in milligrams

ple Number	No. 1	No. 2	No. 3	Average	Range	Range/Ave	LOD
3868	0.407	0.407		0.407	0.000	Ø	NA
39659	0.0787g	0.0747g					

cked by [signature] 6/6/95

PAK 6/6/95 000085

AKE CITY OFFICE
EST LeVOY DRIVE
AKE CITY, UTAH 84123-2547
66-7700, FAX 801 268-9992

CINCINNATI OFFICE
4388 GLENDALE-MILFORD ROAD
CINCINNATI, OHIO 45242-3706
513 733-5336, FAX 513 733-5347

BALTIMORE OFFICE
10 JULIET LANE, SUITE #203
BALTIMORE, MARYLAND 21236-1220
410 494-3612, FAX 410 529-5355

RICHLAND OFFICE
313 WELLSIAN WAY
RICHLAND, WASHINGTON 99352-4116
509 943-5858, FAX 509 943-5654

LEADING ANALYTICAL CHEMISTRY INTO THE 21ST CENTURY℠

DATA CHEM LABORATORIES
A Sorenson Company

COVER FORM (TYPE I)
SINGLE METHOD ANALYSES

SUMMARY INFORMATION

Form RLIMS63M-V1.0
06229511295286
Page 1

G954S00V

Date Reported.....: JUN 23 1995

Date Printed.....: 22-JUN-95 11:29
DCL Client Group..: S95-0498-FE

Client Ref Number.: Not Provided
Release Number....: Not Provided

Analysis Method...: EPA 114 A-5

Hayden Environmental Group, Inc.
Attention: David Robinson
561 Congress Park Drive
Dayton, OH 45459

Client Sample ID	Lab Sample ID
L-57496-1	BL-57496-1
C-57496-1	QC-57496-1
EAG BLK	EO 3881
O-1	EO 3882
O-1	EO 3882MD
O-1	EO 3883
LD BLK	EO 3884

This report is 14 total pages.

Analyst: Robert B. Copenhafer

Reviewer: Norman K. Christensen

Laboratory Supervisor: Norman K. Christensen

60 West LeVoy Drive / Salt Lake City, Utah 84123-2547 / (801) 266-7700
FAX (801) 268-9992

DATA CHEM LABORATORIES
A Sorenson Company

FORM H (TYPE I)
SINGLE METHOD ANALYSES

SAMPLE GROUP COMMENTS

Form RLIMS63H-V1.0
06229511295286
Page 2

G954S00V

Date Printed.....: 22-JUN-95 11:29
DCL Client Group..: S95-0498-FE

: Name.....: Hayden Environmental Group, Inc.

Release Number....: Not Provided

: Group Comments

?ossible positive interferences could have been in the extract of sample
)2. The developed color of this sample was brownish-yellow, versus clear,
: yellow of the standards.

ıl Information

: DCL QC Database maintains all numerical figures which are input from the pertinent data
:. These data have not been rounded to significant figures nor have they been moisture corrected.
:s generated from the system, however, list data which have been rounded to the number of
:icant figures requested by the client or deemed appropriate for the method. This may create
discrepancies between data which appear on the QC Summary Forms (Forms B-G) and those that would
culated from rounded analytical results. Additionally, if a moisture correction is performed,
:ences will be observed between the QC data and the surrogate data reported on Form A (or other
: forms) and corresponding data reported on QC Summary Forms. In these cases, the Form A will
ıte the "Report Basis" as well as the moisture value used for making the correction.

. Definitions

- Not Detected above the MDL or IDL (LLD or MDC for radiochemistry).
- For organic analysis the qualifier indicates that this analyte was found in the method blank. For inorganic analysis the qualifier signifies the value is between the IDL and PQL.
- The qualifier indicates that the value is between the MDL and the PQL. It is also used for indicating an estimated value for tentatively identified compounds in mass spectrometry where a 1:1 response is assumed.

50 West LeVoy Drive / Salt Lake City, Utah 84123-2547 / (801) 266-7700
FAX (801) 268-9992

DATA CHEM LABORATORIES
A Sorenson Company

FORM A (TYPE I)
SINGLE METHOD ANALYSES

SAMPLE ANALYSIS DATA SHEET

Form RLIMS63A-V1.0
06229511295286
Page 3

S955N03C

Date Printed.....: 22-JUN-95 11:29
Client Sample Name: BL-57496-1
DCL Sample Name...: BL-57496-1

ent Name.....: Hayden Environmental Group, Inc.
ent Ref Number....: Not Provided
pling Site.....: Not Applicable
ase Number.....: Not Provided

Matrix.....: F/LIQ
Date Sampled.....: Not Applicable
Reporting Units...: ug/sample
☐As Received ☐Dried

e Received.....: Not Applicable
Client Group.....: S95-0498-FE

Preparation Group: Not Applicable
e Prepared.....: 20-JUN-95 00:00
paration Method...: EPA 114 A-5
quot Weight/Volume: Not Applicable
Weight/Volume....: Not Required

DCL Analysis Group: G955N00Q
Analysis Method...: EPA 114 A-5
Instrument Type...: VIS SPEC
Instrument ID.....: 100-20
Column Type.....: Not Applicable

lytical Results

yte	Date Analyzed	MDL	Result	Flag	Dilution	CRDL
ium	20-JUN-95 00:00		ND		1	50

000028 003

960 West LeVoy Drive / Salt Lake City, Utah 84123-2547 / (801) 266-7700
FAX (801) 268-9992

DATA CHEM LABORATORIES
A Sorenson Company

FORM A (TYPE I)
SINGLE METHOD ANALYSES

SAMPLE ANALYSIS DATA SHEET

Form RLIMS63A-V1.0
06229511295286
Page 4

S955N03D

Date Printed.....: 22-JUN-95 11:29
Client Sample Name: QC-57496-1
DCL Sample Name...: QC-57496-1

ent Name.....: Hayden Environmental Group, Inc.
ent Ref Number....: Not Provided
pling Site.....: Not Applicable
ase Number.....: Not Provided

Matrix.....: F/LIQ
Date Sampled.....: Not Applicable
Reporting Units...: ug/sample
☐ As Received ☐ Dried

Received.....: Not Applicable
Client Group.....: S95-0498-FE

Preparation Group: Not Applicable
Prepared.....: 20-JUN-95 00:00
aration Method...: EPA 114 A-5
uot Weight/Volume: Not Applicable
Weight/Volume....: Not Required

DCL Analysis Group: G955N00Q
Analysis Method...: EPA 114 A-5
Instrument Type...: VIS SPEC
Instrument ID.....: 100-20
Column Type.....: Not Applicable

lytical Results

yte	Date Analyzed	MDL	Result	Flag	Dilution	CRDL
ium	20-JUN-95 00:00		2100		1	50

le Comments

et = 2250 ug/sample

000089

960 West LeVoy Drive / Salt Lake City, Utah 84123-2547 / (801) 266-7700
FAX (801) 268-9992

DATA CHEM LABORATORIES
A Sorenson Company

FORM A (TYPE I)
SINGLE METHOD ANALYSES

SAMPLE ANALYSIS DATA SHEET

Form RLIMS63A-V1.0
06229511295286
Page 5

S954S01F

ent Name.....: Hayden Environmental Group, Inc.
ent Ref Number....: Not Provided
pling Site.....: Rel# 1000006737
ase Number.....: Not Provided

e Received.....: 18-MAY-95 00:00
Client Group.....: S95-0498-FE

Preparation Group: Not Applicable
e Prepared.....: 20-JUN-95 00:00
paration Method...: EPA 114 A-5
quot Weight/Volume: Not Applicable
Weight/Volume....: Not Required

Date Printed.....: 22-JUN-95 11:29
Client Sample Name: REAG BLK |153657,62,66
DCL Sample Name...: EO 3881

Matrix.....: F/LIQ
Date Sampled.....: 11-MAY-95 00:00
Reporting Units....: ug/sample
Report Basis.....: ☐As Received ☐Dried

DCL Analysis Group: G955N00Q
Analysis Method...: EPA 114 A-5
Instrument Type...: VIS SPEC
Instrument ID.....: 100-20
Column Type.....: Not Applicable

lytical Results

yte	Date Analyzed	MDL	Result	Flag	Dilution	CRDL
ium	20-JUN-95 00:00		ND		1	50

960 West LeVoy Drive / Salt Lake City, Utah 84123-2547 / (801) 266-7700
FAX (801) 268-9992

DATA CHEM LABORATORIES
A Sorenson Company

FORM A (TYPE I)
SINGLE METHOD ANALYSES

SAMPLE ANALYSIS DATA SHEET

Form RLIMS63A-V1.0
06229511295286
Page 6

S954S01G

Date Printed.....: 22-JUN-95 11:29
Client Sample Name: EO-1 |153658,63,67
DCL Sample Name...: EO 3882

ent Name.....: Hayden Environmental Group, Inc.
ent Ref Number....: Not Provided
pling Site.....: Rel# 1000006737
ease Number.....: Not Provided

Matrix.....: F/LIQ
Date Sampled.....: 10-MAY-95 00:00
Reporting Units...: ug/sample
Report Basis.....: ☐ As Received ☐ Dried

e Received.....: 18-MAY-95 00:00
Client Group.....: S95-0498-FE

Preparation Group: Not Applicable
e Prepared.....: 20-JUN-95 00:00
paration Method...: EPA 114 A-5
quot Weight/Volume: Not Applicable
Weight/Volume....: Not Required

DCL Analysis Group: G955N00Q
Analysis Method...: EPA 114 A-5
Instrument Type...: VIS SPEC
Instrument ID.....: 100-20
Column Type.....: Not Applicable

lytical Results

lyte	Date Analyzed	MDL	Result	Flag	Dilution	CRDL
ıium	20-JUN-95 00:00		1500		1	50

960 West LeVoy Drive / Salt Lake City, Utah 84123-2547 / (801) 266-7700
FAX (801) 268-9992

DATA CHEM LABORATORIES
A Sorenson Company

FORM A (TYPE I)
SINGLE METHOD ANALYSES

SAMPLE ANALYSIS DATA SHEET

Form RLIMS63A-V1.0
06229511295286
Page 7

S955N03F

Date Printed.....: 22-JUN-95 11:29
Client Sample Name: EO-1 |153658,63,67
DCL Sample Name...: EO 3882MD

:nt Name.....: Hayden Environmental Group, Inc.
:nt Ref Number....: Not Provided
:ling Site.....: Rel# 1000006737
:ase Number.....: Not Provided

Matrix.....: F/LIQ
Date Sampled.....: Not Provided
Reporting Units...: ug/sample
Report Basis.....: ☐As Received ☐Dried

: Received.....: 18-MAY-95 00:00
Client Group.....: S95-0498-FE

Preparation Group: Not Applicable
: Prepared.....: 20-JUN-95 00:00
:aration Method...: EPA 114 A-5
[uot Weight/Volume: Not Applicable
Weight/Volume....: Not Required

DCL Analysis Group: G955N00Q
Analysis Method...: EPA 114 A-5
Instrument Type...: VIS SPEC
Instrument ID.....: 100-20
Column Type.....: Not Applicable

lytical Results

yte	Date Analyzed	MDL	Result	Flag	Dilution	CRDL
ium	20-JUN-95 00:00		1500		1	50

000092 007

960 West LeVoy Drive / Salt Lake City, Utah 84123-2547 / (801) 266-7700
FAX (801) 268-9992

DATA CHEM LABORATORIES
A Sorenson Company

FORM A (TYPE I)
SINGLE METHOD ANALYSES

SAMPLE ANALYSIS DATA SHEET

Form RLIMS63A-V1.0
06229511295286

S954S01H

Date Printed.....: 22-JUN-95 11:29
Client Sample Name: LO-1 |153659,64,68
DCL Sample Name...: EO 3883

ınt Name.....: Hayden Environmental Group, Inc.
ınt Ref Number....: Not Provided
ıling Site.....: Rel# 1000006737
ıase Number.....: Not Provided

Matrix.....: F/LIQ
Date Sampled.....: 09-MAY-95 00:00
Reporting Units...: ug/sample
Report Basis.....: ☐As Received ☐Dried

Received.....: 18-MAY-95 00:00
Client Group.....: S95-0498-FE

Preparation Group: Not Applicable
Prepared.....: 20-JUN-95 00:00
ıaration Method...: EPA 114 A-5
ıuot Weight/Volume: Not Applicable
Weight/Volume....: Not Required

DCL Analysis Group: G955N00Q
Analysis Method...: EPA 114 A-5
Instrument Type...: VIS SPEC
Instrument ID.....: 100-20
Column Type.....: Not Applicable

lytical Results

yte	Date Analyzed	MDL	Result	Flag	Dilution	CRDL
ium	20-JUN-95 00:00		ND		1	50

960 West LeVoy Drive / Salt Lake City, Utah 84123-2547 / (801) 266-7700
FAX (801) 268-9992

DATA CHEM LABORATORIES
A Sorenson Company

FORM A (TYPE I)
SINGLE METHOD ANALYSES

SAMPLE ANALYSIS DATA SHEET

Form RLIMS63A-V1.0
06229511295286
Page 9

S954S01J

Date Printed.....: 22-JUN-95 11:29
Client Sample Name: FLD BLK |153660,65,69
DCL Sample Name...: EO 3884

nt Name.....: Hayden Environmental Group, Inc.
nt Ref Number....: Not Provided
ling Site.....: Rel# 1000006737
ase Number.....: Not Provided

Matrix.....: F/LIQ
Date Sampled.....: 11-MAY-95 00:00
Reporting Units...: ug/sample
Report Basis.....: ☐As Received ☐Dried

Received.....: 18-MAY-95 00:00
Client Group.....: S95-0498-FE

Preparation Group: Not Applicable
Prepared.....: 20-JUN-95 00:00
ration Method...: EPA 114 A-5
ot Weight/Volume: Not Applicable
Weight/Volume....: Not Required

DCL Analysis Group: G955N00Q
Analysis Method...: EPA 114 A-5
Instrument Type...: VIS SPEC
Instrument ID.....: 100-20
Column Type.....: Not Applicable

ytical Results

te	Date Analyzed	MDL	Result	Flag	Dilution	CRDL
um	20-JUN-95 00:00		ND		1	50

60 West LeVoy Drive / Salt Lake City, Utah 84123-2547 / (801) 266-7700
FAX (801) 268-9992

DATA CHEM LABORATORIES
A Sorenson Company

FORM B (TYPE I)
SINGLE METHOD ANALYSES

QUALITY CONTROL DATA SHEET
LABORATORY CONTROL SAMPLE (LCS)

Form RLIMS63B-V1.0
06229511295286
Page 10

S955N03D

Date Printed.....: 22-JUN-95 11:29
DCL Sample Name...: QC-57496-1

DCL Analysis Group: G955N00Q
Analysis Method...: EPA 114 A-5
Instrument Type...: VIS SPEC
Instrument ID.....: 100-20
Column Type.....: Not Applicable

QC Limit Type.....: Method

nt Name.....: Hayden Environmental Group, Inc.
ase Number.....: Not Provided

ix.....: F/LIQ
rting Units.....: ug/sample

Source.....:

Preparation Group: Not Applicable
Prepared.....: 20-JUN-95 00:00
aration Method...: EPA 114 A-5

lytical Results

yte	Date Analyzed	Target	Result	Percent Recovery	QC Limits	QC Flag
ium	20-JUN-95 00:00	2250	2100	92.2		

: This data is from the LIMS not the QC database. (2073.8)

le Comments

et = 2250 ug/sample

000095

010

960 West LeVoy Drive / Salt Lake City, Utah 84123-2547 / (801) 266-7700
FAX (801) 268-9992

DATA CHEM LABORATORIES
A Sorenson Company

FORM C (TYPE I)
SINGLE METHOD ANALYSES

QUALITY CONTROL DATA SHEET
BLANK SAMPLE

Form RLIMS63C-V1.0
06229511295286
Page 11

S955N03C

ent Name.....: Hayden Environmental Group, Inc.
ease Number.....: Not Provided

rix.....: F/LIQ
orting Units.....: ug/sample

Preparation Group: Not Applicable
e Prepared.....: 20-JUN-95 00:00
paration Method...: EPA 114 A-5

Date Printed.....: 22-JUN-95 11:29
DCL Sample Name...: BL-57496-1

DCL Analysis Group: G955N00Q
Analysis Method...: EPA 114 A-5
Instrument Type...: VIS SPEC
Instrument ID.....: 100-20
Column Type.....: Not Applicable

lytical Results

lyte	Date Analyzed	Result	CRDL
nium	20-JUN-95 00:00	ND	50

E: This data is from the LIMS not the QC database.

960 West LeVoy Drive / Salt Lake City, Utah 84123-2547 / (801) 266-7700
FAX (801) 268-9992

DATA CHEM LABORATORIES
A Sorenson Company

FORM E (TYPE I)
SINGLE METHOD ANALYSES

QUALITY CONTROL DATA SHEET
MATRIX DUPLICATE SAMPLE

ent Name.....: Hayden Environmental Group, Inc.
ase Number.....: Not Provided

ix.....: F/LIQ
rting Units.....: ug/sample

Preparation Group: Not Applicable
Prepared.....: 20-JUN-95 00:00
aration Method...: EPA 114 A-5

Date Printed.....: 22-JUN-95 11:29
DCL Sample Name...: EO 3882MD

DCL Analysis Group: G955N00Q
Analysis Method...: EPA 114 A-5
Instrument Type...: VIS SPEC
Instrument ID.....: 100-20
Column Type.....: Not Applicable

QC Limit Type.....: Method

lytical Results

yte	Date Analyzed	Sample Result	Duplicate Result	Mean	Range	RPD	QC Limits	QC Flag
ium	20-JUN-95 00:00	1500	1500	1500	0.000	0.00		

: This data is from the LIMS not the QC database.

960 West LeVoy Drive / Salt Lake City, Utah 84123-2547 / (801) 266-7700
FAX (801) 268-9992

DATA CHEM
LABORATORIES
A SORENSON COMPANY

Case Narrative

Method: EPA 114 A-5
Analysis: Uranium
Preparation Method: EPA 114 A-5
LIMS Group #: G955N00Q
DCL Set ID: S95-0498-FE

Client: Hayden Environmental Group
Account: 3025
Matrix: F/LIQ

General Set Information: Samples were analyzed for uranium according to method EPA 114 A-5 using visible spectrophotometry.

Method Summary: The method was based on the measurement of a uranium-dibenzoylmethane complex. Absorbance was measured at 415nm. Uranium was first oxidized to uranium (VI) by potassium permanganate. An acid-deficient aluminum nitrate, tetrapropylammonium nitrate solution acted as a salting solution to quantitatively extract the uranium into a methyl isobutyl ketone (MIBK) solvent. The organic solvent was then scrubbed with an acid-deficient solution of aluminum nitrate containing tartrate, oxalate, and (ethylenedinitrilo)tetraacetic acid. Ferrous sulfamate was then added to remove interfering ions. Dibenzoylmethane, in a mixture of ethyl alcohol and pyridine, was added to the MIBK phase to develop the color.

Sample Preparation: The samples were prepared as composites of glass fiber filter samples and liquid samples.

Dilution(s): None required.

Method and Sample QC data: The method blank (BL-57496-1) was below the LOD. The LCS (QC-57496-1) recovery was 92.2%.

MD Analysis: The RPD between EO 3882 and EO 3882MD was 0.00.

Instrument QC: The ICV recovery was 91.8%, and the ICB was below the LOD. All other calibration verifications and blanks met method specified acceptance criteria

Flagging Codes: None.

NC/CAR: No NC/CARs were required for this set.

Miscellaneous Comments: The developed color of sample EO 3882 was brownish-yellow, and the developed color of the standards was a clear, bright yellow. It is possible that there were positive interferences in the sample.

Robert B. Copenhafer 6/22/95

Robert B. Copenhafer Date

DATA CHEM LABORATORIES
A SORENSON COMPANY

Datapackage Table of Contents

Information pertaining to this datapackage is divided into the four categories listed below (see colored divider sheets for an inventory list of each category). If an item on the inventory is not applicable, an "NA" is placed in the corresponding check box. A Case Narrative immediately precedes this Table of Contents and contains pertinent information about this datapackage.

Analytical Forms . . . . . Yellow
Sample Tracking Documentation . . . . . Pink
Analytical Documentation . . . . . Blue
Raw Data . . . . . Green

♦ ♦ ♦ ♦ ♦ ♦ ♦ ♦ ♦ ♦

Analytical Forms
Inventory Checklist

[X] Case Narrative

[N/A] IRDMIS	[N/A] Commercial Forms
[ ] Data Review and Approval Form	[ ] Analytical or Environmental Report Form
[ ] IRDMIS Reports	[ ] Set Comments
[ ] GC/MS TICs	[X] Applicable QC Sheets

[X] RLIMS Forms	
[X] Cover Form	[N/A] Matrix Spike/Matrix Spike Duplicate Sample (Form F)
[X] Sample Group Comments (Form H)	[N/A] Surrogate Summary (Form G)
[X] Sample Analysis Data Sheet (Form A)	[N/A] Initial Calibration Form
[X] Laboratory Control Sample (Form B)	[N/A] Continuing Calibration Form
[X] Blank Sample (Form C)	[N/A] Serial Dilution Form
[N/A] Matrix Spike Sample (Form D)	[N/A] Endrin Breakdown or BFB/DFTPP GC/MS Tuning Form
[X] Matrix Duplicate Sample (Form E)	[N/A] Internal Standard Form

Analytical Forms
Reviewer Checklist

X The Analytical Forms Inventory Checklist above is complete.

X The Case Narrative was completed in accordance with procedures in DCL SOP XX-DC-020, "Datapackage Preparation and Validation."

X Only the correct report forms are used (IRDMIS or Commercial Forms or RLIMS Forms).

X All fields on the report forms are complete with the correct information, including signatures.

X Results for all samples are reported per client request.

X Units, methods, and dates are correct.

X Sample and/or set comments are complete.

000100

Assembled by: [signature] 6/22/95 (Signature, Date) Reviewed by: Norman K. Christensen 6/22/95 (Signature, Date)

DATA CHEM LABORATORIES
A SORENSON COMPANY

Sample Tracking Documentation
Inventory Checklist

- [x] LIMS Grouping Reports
- [x] DataChem Laboratories (DCL) Chain-of-Custody Record
- [x] DCL Sample Work Order
- [N/A] Copy of numbered Nonconformance/Corrective Action Report (NC/CAR)
- [N/A] Copy of Client-Related Problem Report (CPR)

Sample Tracking Documentation
Reviewer Checklist

X The Sample Tracking Documentation Inventory Checklist above is complete.

X DCL Chain-of-Custody Record provides signatures for the sample portion reported in this data package.

X DCL Chain-of-Custody Record was completed in accordance with procedures in DCL SOP XX-DC-006 "Chain-of-Custody and Laboratory Tracking."

X Methods specified on the Sample Work Order were performed or an explanation for deviations is provided.

X Special instructions on the Sample Work Order were followed.

X Project Management instructions on the Project Protocol Worksheet were followed.

X Client's requests were met or an explanation is provided in the Case Narrative.

NA NC/CAR and/or CPR were completed in accordance with procedures in DCL SOP QC-DC-006 "Nonconformance/Corrective Action Report (NC/CAR) Procedures."

sembled by: [illegible] 6/21/95 Reviewed by: Norman K. Christensen 6/22/95
Signature Date Signature Date

DataChem Laboratories
LIMS - Sample Master System
Analysis Group Report

te: 21-JUN-1995 10:01
er: COPENHAFER

Page: 1
RLIMS15-V1.1

alysis Run Name: G955N00Q

Group ID: G955N00Q

mples: 7

s	Laboratory Sample Name	Field Sample Name	Laboratory Sample ID	Laboratory Group Name	Accnt. Number
1	BL-57496-1	BL-57496-1	S955N03C	S95-0498-FE	03025
2	QC-57496-1	QC-57496-1	S955N03D	S95-0498-FE	03025
3	EO 3881	REAG BLK	S954S01F	S95-0498-FE	03025
4	EO 3882	EO-1	S954S01G	S95-0498-FE	03025
5	EO 3882MD	EO-1	S955N03F	S95-0498-FE	03025
6	EO 3883	LO-1	S954S01H	S95-0498-FE	03025
7	EO 3884	FLD BLK	S954S01J	S95-0498-FE	03025

--- END OF LISTING -----

CHAIN-OF-CUSTODY

Results due by: 7-Jun-1995

Project/Job/Task: COMM-ENV | *Split:* | **Root Set ID:** S95-0498 * | **Reporting Group** CE DE DE EE

Client: Hayden Environmental Group, Inc. | **Account:** 03025

Comments:

Verified: AMG 5-23-95

Date Sampled	Field ID Number	DCL Sample Name	DCL Sample ID	QC	Matrix					Total Uranium	Gross Alpha	Gross Beta	Gamma scan						# Bottles
11-May-1995	REAG BLK	EO 3881			F/LIQ					X	X	X	X						1
10-May-1995	EO-1	EO 3882			F/LIQ					X	X	X	X						1
9-May-1995	LO-1	EO 3883			F/LIQ					X	X	X	X						1
11-May-1995	FLD BLK	EO 3884			F/LIQ					X	X	X	X						1

Received: Date/Time/Signature 5-18-95 / 1000 / Amaryllis McClure

ORIGINAL FIELD SAMPLE CHAIN-OF-CUSTODY

Relinquished By: (Signature)	Date/Time	Received By: (Signature)	Reason for Transfer/ Storage Location
Amaryllis McClure	06/07/95 1110	Dave Reddick	Prep Total U, α, β, γ α
Dave Reddick	06/07/95 1530	Max H. Barnett	γ Scan
Max H. Barnett	6/8/95 1600	Dave Reddick	Total U
Dave Reddick	6/9/95 0830	Robin Tully	gross α/β
Robin Tully	6/12/95 1600	Bobby Copenhafer	U anal.
Bobby Copenhafer	6/12/95 1605	R-84-1 RSC 6/12/95	Storage/R-84-1
R-84-1 RSC 6/20/95	6-20-95 0800	Bobby Copenhafer	U anal.

SAMPLE PREPARATION / ANALYSIS CHAIN-OF-CUSTODY

Sample Prep/Analysis for: Uranium | Lab Notebook No.: 2930

Prepared/Analyzed by: RSC | Date/Time: 6-20-95/0800

Relinquished By: (Signature)	Date/Time	Received By: (Signature)	Reason for Transfer/ Storage Location
Bobby Copenhafer	6-20-95 0800	Bobby Copenhafer	U anal.

Check box if there is a continuation page ☐

Form: COFC1.01-SWV2.30 000103

Printed 5/22/1995 14:05

2194

- 7194

Sample Work Order

: Clearance: _____

oject Manager: Keith R. Nicholson Scott Hayes

ent: Hayden Environmental Group, Inc.

count: 03025

oject/Task: COMM-ENV

te Received: 18-May-1995

te for Mailing Report: 7-Jun-1995 par

DCL Root Set ID: S95-0498-FE

DCL Lab. Name: EO 3881–EO 3884

Total # Samples: 4

Sample Medium: F/LIQ

Earliest Sampling Date: 9-May-1995

Preparation Type:

:p. ›up	Ion Chromatography/UV_VIS Analytes Requested	Latest Prep. Date	Latest Anal. Date	No. of Samp.	Split ID	Storage Location	Analysis/Prep. Method	Inst.	
E	Uranium			4		Rad Lab	EPA 114 A-5	~~COLOR~~ VIS SPEC	

ecial Instructions: See NKC for method.

:tion Manager Approval: NKC 6/1/95

Norman K. Christensen Date

er Sections Receiving Sample Portions: IM, IW, WA

000104

DataChem Laboratories/ 960 West LeVoy Drive / Salt Lake City, Utah 84123

: WO1.04-SWV2.12

PRINTED 5/25/1995 11:46

Results due by: 7-Jun-1995

Project/Job/Task: COMM-ENV	Split:	Root Set ID: S95-0498-FE	Reporting Group	FE									#
Client: Hayden Environmental Group, Inc.		Account: 03025	Analysis	Uranium									Bottles
Comments: Verified: Am 5-23-96													

Date Sampled	Field ID Number	DCL Sample Name	DCL Sample ID	QC	Matrix					Uranium									Bottles
11-May-1995	REAG BLK	EO 3881			F/LIQ					X									1
10-May-1995	EO-1	EO 3882			F/LIQ					X									1
9-May-1995	LO-1	EO 3883			F/LIQ					X									1
11-May-1995	FLD BLK	EO 3884			F/LIQ					X									1

Received: Date/Time/Signature 5-18-95 / 1000 / Amarylis McGuire

ORIGINAL FIELD SAMPLE CHAIN-OF-CUSTODY				SAMPLE PREPARATION / ANALYSIS CHAIN-OF-CUSTODY Sample Prep/Analysis for: _____ Lab Notebook No.: _____ Prepared/Analyzed by: _____ Date/Time: _____			
Relinquished By: (Signature)	Date/Time	Received By: (Signature)	Reason for Transfer/ Storage Location	Relinquished By: (Signature)	Date/Time	Received By: (Signature)	Reason for Transfer/ Storage Location
Amarylis McGuire							

Check box if there is a continuation page ☐

Form: COFC1.01-SWV2.30 000103

Printed 5/25/1995 11:46

2194

RSO - ANALYTICAL LABORATORY SERVICES

OFF-SITE LABORATORY CUSTODY TRANSFER AND ANALYSIS REQUEST RECORD (OCTR)

REFERENCE DOCUMENT NO.: SAR/CR: SPL-95-1376

PURCHASE ORDER NO.: 95-H053	OFF-SITE LAB CONTACT: KEITH NICHOLSON	REPORT TO: FERMCO, P.O. BOX 398704, CINCINNATI, OH 45239-8704
RELEASE NO.: 1000006737	FERMCO CONTACT/PHONE: RICH DAIN (513) 738-9157	
SAMPLE SHIPMENT DATE: 5-17-95	REQUIRED REPORT DATE: PER CONTRACT (NORMAL)	RECEIVING LAB NAME: DATACHEM
SAMPLE SHIPPER: M. CORNELL	SAMPLE TEAM: EFFL. MON. & CNTL	RECEIVING LAB ADDRESS: 960 W. LEVOY DR. SALT LAKE CITY, UT 84123

	SAMPLE NUMBER		SAMPLE DESCRIPTION/TYPE/CODE	DATE/TIME COLLECTED	CONTAINER TYPE	SAMPLE VOLUME	PRESERVATION	ANALYSIS REQUESTED	CONDITION UPON RECEIPT*
1	200153657	REAG. BLK.	G.F. FILTER	5/11/95 1030	PETRI DISH	1 x FLTR	NONE	* PARTICULATES EO 3868	ANALYSIS EO 3881
2	200153662	REAG. BLK.	ACETONE	5/11/95 1030	PLASTIC	1 x 1L	NONE	* 3869	
3	200153666	REAG. BLK.	D.I. WATER	5/11/95 1030	PLASTIC	1 x 1L	NONE	* 3870	
4	200153658	EO-1	G.F. FILTER	5/10/95 0930	PETRI DISH	1 x FLTR	NONE	* 3871	3882
5	200153663	EO-1	ACETONE	5/10/95 0930	PLASTIC	1 x 1L	NONE	* 3872	
6	200153667	EO-1	D.I. WATER	5/10/95 0930	PLASTIC	1 x 1L	NONE	* 3873	
7	200153659	LO-1	G.F. FILTER	5/9/95 1450	PETRI DISH	1 x FLTR	NONE	* 3874	3883
8	200153664	LO-1	ACETONE	5/9/95 1450	PLASTIC	1 x 1L	NONE	* 3875	
9	200153668	LO-1	D.I. WATER	5/9/95 1450	PLASTIC	1 x 1L	NONE	* 3876	
10	200153660	FLD BLK	G.F. FILTER	5/11/95 1030	PETRI DISH	1 x FLTR	NONE	* 3877	3884
11	200153665	FLD BLK	ACETONE	5/11/95 1030	PLASTIC	1 x 1L	NONE	* 3879	

CAN SEAL NO. 2970

SPECIAL INSTRUCTIONS: TOTAL U ANALYSES ARE TO BE PERFORMED BY LASER PHOSPHORMETRY & EITHER COLORMITY OR FLOUOMETRY (AS LISTED IN METHOD 114)

* = TOTAL U (CE); GROSS A/B (DE); PARTICULATES (AE BE); GAMMA SCAN (EE)

SAMPLE PLAN NUMBER:	PROJECT NAME:	CHARGE NUMBER:
N/A	PERIODIC CONFIRMATORY MSMTS.	7 ECB2

CAN NO.:	SEAL NO.:	CAN NO.:	SEAL NO.:	CAN NO.:	SEAL NO.:	CAN NO.:	SEAL NO.:	CAN NO.:	SEAL NO.:	CAN NO.:	SEAL NO.:
				CAN 5-17-95 COOLER	SEALED	w/ C-O-C	TAPE				

RELINQUISHED			RECEIVED		
RELINQUISHED BY	DATE	TIME	DATE	TIME	RECEIVED BY
1. Matt Cornell	5-17-95	1300	1. 5-18-95	1000	Stephanie Smith
2. Stephanie Smith	5-18-95	1030	2. 5-18-95	1035	Amaryllis McGlwee
3.			3.		

NO.	DISTRIBUTION OF COPIES	
1	WHITE	REMAIN WITH SAMPLES
2	YELLOW	OFF-SITE LAB
3	PINK	FERMCO DATA REVIEW AND REPORTING
4	BLUE	ORIGINATOR

000106

*IF SEALS ARE BROKEN, CONTACT THE FERMCO CONTACT LISTED ABOVE IMMEDIATELY.

FS-F-3366 (REV. 12/31/92)

7194

RSO - ANALYTICAL LABORATORY SERVICES

OFF-SITE LABORATORY CUSTODY TRANSFER AND ANALYSIS REQUEST RECORD (OCTR)

REFERENCE DOCUMENT NO:
SAR/CR: SPL-95-1376

PURCHASE ORDER NO.: 95-H053	OFF-SITE LAB CONTACT: KEITH NICHOLSON	REPORT TO: FERMCO, P.O. BOX 398704, CINCINNATI, OH 45239-8704
RELEASE NO.: 1000006737	FERMCO CONTACT/PHONE: RICH DAIN (513) 738-9157	
SAMPLE SHIPMENT DATE: 5-17-95	REQUIRED REPORT DATE: PER CONTRACT (NORMAL)	RECEIVING LAB NAME: DATACHEM
SAMPLE SHIPPER: M. CORNELL	SAMPLE TEAM: EFFL. MON. & CNTL	RECEIVING LAB ADDRESS: 960 W. LEVOY DR. SALT LAKE CITY, UT 84123

	SAMPLE NUMBER		SAMPLE DESCRIPTION/TYPE/CODE	DATE/TIME COLLECTED	CONTAINER TYPE	SAMPLE VOLUME	PRESERVATION	ANALYSIS REQUESTED	CONDITION UPON RECEIPT*
1	200153657	REAG. BLK.	G.F. FILTER	5/11/95 1030	PETRI DISH	1 x FLTR	NONE	* PARTICULATES ED 3868	ANALYSIS ED 3881
2	200153662	REAG. BLK.	ACETONE	5/11/95 1030	PLASTIC	1 x IL	NONE	* 3869	
3	200153666	REAG. BLK.	D.I. WATER	5/11/95 1030	PLASTIC	1 x IL	NONE	* 3870	
4	200153658	EO-1	G.F. FILTER	5/10/95 0930	PETRI DISH	1 x FLTR	NONE	* 3871	3882
5	200153663	EO-1	ACETONE	5/10/95 0930	PLASTIC	1 x IL	NONE	* 3872	
6	200153667	EO-1	D.I. WATER	5/10/95 0930	PLASTIC	1 x IL	NONE	* 3873	
7	200153659	LO-1	G.F. FILTER	5/9/95 1450	PETRI DISH	1 x FLTR	NONE	* 3874	3883
8	200153664	LO-1	ACETONE	5/9/95 1450	PLASTIC	1 x IL	NONE	* 3875	
9	200153668	LO-1	D.I. WATER	5/9/95 1450	PLASTIC	1 x IL	NONE	* 3876	
10	200153660	FLD BLK	G.F. FILTER	5/11/95 1030	PETRI DISH	1 x FLTR	NONE	* 3877	3884
11	200153665	FLD BLK	ACETONE	5/11/95 1030	PLASTIC	1 x IL	NONE	* 3879	

CAN SEAL No. 2970

SPECIAL INSTRUCTIONS: TOTAL U ANALYSES ARE TO BE PERFORMED BY LASER PHOSPHORMETRY & EITHER COLORMITY OR FLOWOMETRY (AS LISTED IN METHOD 114)

* = TOTAL U (CE); GROSS A/B (DE); PARTICULATES (CE, DE); GAMMA SCAN (EE)

SAMPLE PLAN NUMBER:	PROJECT NAME:	CHARGE NUMBER:
N/A	PERIODIC CONFIRMATORY MSMTS.	7 ECB 2

CAN NO.:	SEAL NO.:	CAN NO.:	SEAL NO.:	CAN NO.:	SEAL NO.:	CAN NO.:	SEAL NO.:	CAN NO.:	SEAL NO.:	CAN NO.:	SEAL NO.:
				5-17-95 CAN COOLER	SEALED	w/ C-o-C	TAPE				

RELINQUISHED			RECEIVED		
RELINQUISHED BY	DATE	TIME	DATE	TIME	RECEIVED BY
1. Matt Cornell	5-17-95	1300	1. 5-18-95	1000	Stephanie Smith
2. Stephanie Smith	5-18-95	1030	2. 5-18-95	1035	Anthony McNelwee
3.			3.		

NO.	DISTRIBUTION OF COPIES	
1	*WHITE*	REMAIN WITH SAMPLES
2	*YELLOW*	OFF-SITE LAB
3	*PINK*	FERMCO DATA REVIEW AND REPORTING
4	*BLUE*	ORIGINATOR

000107

*IF SEALS ARE BROKEN, CONTACT THE FERMCO CONTACT LISTED ABOVE IMMEDIATELY.

FS-F-3366 (REV. 12/31/92)

2194

Fernald Environmental Restoration Management Corporation

RSO - ANALYTICAL LABORATORY SERVICES

OFF-SITE LABORATORY CUSTODY TRANSFER AND ANALYSIS REQUEST RECORD (OCTR)

REFERENCE DOCUMENT NO:
SAR/CR: SPL-95-1376

PURCHASE ORDER NO.: 95-H053	OFF-SITE LAB CONTACT: KEITH NICHOLSON	REPORT TO: FERMCO, P.O. BOX 398704, CINCINNATI, OH 45239-8704
RELEASE NO.: 1000006737	FERMCO CONTACT/PHONE: RICH DAIN (513) 738-9157	
SAMPLE SHIPMENT DATE: 5-17-95	REQUIRED REPORT DATE: PER CONTRACT (NORMAL)	RECEIVING LAB NAME: DATACHEM
SAMPLE SHIPPER: M. CORNELL	SAMPLE TEAM: EFF. MON. & CNTL	RECEIVING LAB ADDRESS: 960 W. LEVOY DR. SALT LAKE CITY, UT. 84123

	SAMPLE NUMBER	SAMPLE DESCRIPTION/TYPE/CODE	DATE/TIME COLLECTED	CONTAINER TYPE	SAMPLE VOLUME	PRESERVATION	ANALYSIS REQUESTED	CONDITION UPON RECEIPT*
1	200153669 FLD BLK	D.I. WATER	5/11/95 1030	PLASTIC	1 x 1L	NONE	* EO 38880 PARTICULATES	EO 38884 ANALYSIS
2							CAN SEAL NO: 2970	
3								
4								
5								
6								
7								
8								
9								
10								
11								

LAST ENTRY MNC 5-17-95

SPECIAL INSTRUCTIONS: TOTAL U ANALYSES ARE TO BE PERFORMED BY LASER PHOSPHORMETRY & EITHER COLORMITY OR FLUOMETRY (AS LISTED IN METHOD 114)

* = TOTAL U; GROSS A/B; PARTICULATES; GAMMA SCAN

SAMPLE PLAN NUMBER:	PROJECT NAME:	CHARGE NUMBER:
N/A	PERIODIC CONFIRMATORY MSMTS.	7 ECB 2

CAN NO.:	SEAL NO.:	CAN NO.:	SEAL NO.:	CAN NO.:	SEAL NO.:	CAN NO.:	SEAL NO.:	CAN NO.:	SEAL NO.:	CAN NO.:	SEAL NO.:
				CAN COOLER SEALED W/C-O-C TAPE MNC 5-17-95							

RELINQUISHED			RECEIVED		
RELINQUISHED BY	DATE	TIME	DATE	TIME	RECEIVED BY
1. Mark Cornell	5-17-95	1300	1. 5-18-95	1000	Stephanie Smith
2. Stephanie Smith	5-18-95	1030	2. 5-18-95	1035	Amaly Lis McDowell
3.			3.		

NO.	DISTRIBUTION OF COPIES	
1	WHITE	REMAIN WITH SAMPLES
2	YELLOW	OFF-SITE LAB
3	PINK	FERMCO DATA REVIEW AND REPORTING
4	BLUE	ORIGINATOR

FS-F-3366 (REV. 12/31/92)

000108

*IF SEALS ARE BROKEN, CONTACT THE FERMCO CONTACT LISTED ABOVE IMMEDIATELY.

2194

PURCHASE ORDER NO.:	OFF-SITE LAB CONTACT:	REPORT TO:
95-H053	KEITH NICHOLSON	FERMCO P.O. BOX 398704 CINCINNATI, OH 45239-8704
RELEASE NO.: 1000006737	FERMCO CONTACT/PHONE: RICH DAIN (513) 738-9157	
SAMPLE SHIPMENT DATE: 5-17-95	REQUIRED REPORT DATE: PER CONTRACT (NORMAL)	RECEIVING LAB NAME: DATACHEM
SAMPLE SHIPPER: M. CORNELL	SAMPLE TEAM: EFF. MON. & CNTL	RECEIVING LAB ADDRESS: 960 W. LEVOY DR. SALT LAKE CITY, UT. 84123

	SAMPLE NUMBER	SAMPLE DESCRIPTION/TYPE/CODE	DATE/TIME COLLECTED	CONTAINER TYPE	SAMPLE VOLUME	PRESERVATION	ANALYSIS REQUESTED	CONDITION UPON RECEIPT*
1	200153669 FLD BLK	D.I. WATER	5/11/95 1030	PLASTIC	1 x 1L	NONE	* PARTICULATES ED 3,880	ANALYSIS ED 35884
2								
3								
4								
5								
6								
7								
8								
9								
10								
11								

CAN SEAL NO.: 2970

LAST ENTRY MM 5-17-95

SPECIAL INSTRUCTIONS: TOTAL U ANALYSES ARE TO BE PERFORMED BY LASER PHOSPHORMETRY & EITHER COLORMITY OR FLOUOMETRY (AS LISTED IN METHOD 114)

*= TOTAL U; GROSS A/B; PARTICULATES; GAMMA SCAN

SAMPLE PLAN NUMBER:	PROJECT NAME:	CHARGE NUMBER:
N/A	PERIODIC CONFIRMATORY MSMTS.	7 ECB 2

CAN NO.:	SEAL NO.:	CAN NO.:	SEAL NO.:	CAN NO.:	SEAL NO.:	CAN NO.:	SEAL NO.:	CAN NO.:	SEAL NO.:	CAN NO.:	SEAL NO.:
				CAN COOLER		SEALED w/C-O-C TAPE					

RELINQUISHED			RECEIVED		
RELINQUISHED BY	DATE	TIME	DATE	TIME	RECEIVED BY
1. Mark Cornell	5-17-95	1300	1. 5-18-95	1000	Stephanie Smith
2. Stephanie Smith	5-18-95	1030	2. 5-18-95	1035	Amelia McGee
3.			3.		

NO.	DISTRIBUTION OF COPIES	
1	*WHITE*	REMAIN WITH SAMPLES
2	*YELLOW*	OFF-SITE LAB
3	*PINK*	FERMCO DATA REVIEW AND REPORTING
4	*BLUE*	ORIGINATOR

FS-F-3366 (REV. 12/31/92)

000109

*IF SEALS ARE BROKEN, CONTACT THE FERMCO CONTACT LISTED ABOVE IMMEDIATELY.

7194

HAYDEN

DEN
NTAL GROUP, INC.

Post-it® Fax Note 7671	Date 11-21-94	# of pages ▸ 8
To Customer Service	From D. Robinson	
Co./Dept.	Co.	
Phone #	Phone #	
Fax # 801-268-9992	Fax #	

November 21, 1994

Customer Service
DataChem Laboratories
960 West Levoy Drive
Salt Lake City, UT 84123

Subject: **Laboratory Services / Subcontracting**
FERMCO RFP # PES-80706

Dear Sir or Madam:

We are submitting a proposal in response to the above request and would like to receive a quotation from your firm for laboratory services. Your firm's name was given to us by FERMCO as a qualified subcontract laboratory.

We request a firm, fixed cost proposal to provide analytical support for the scope of work included with this letter. To summarize the analytical scope of work:

1. Provide analysis by USEPA Method 5 (40CFR Part 61) for three field samples from Source EP8-013 and one field sample from EP11-002. Filter, probe rinse (Acetone), and backhalf (H_2O) samples will be included as well as quality control samples (see below). Samples are to be analyzed for total particulate.

2. Following particulate analysis, the fractions for each field sample shall be composited and analyzed to total activity and uranium per EPA Method 114, and according to the protocol shown in Table 2 of the scope of work.

3. Proposed cost shall include cost to analyze and report results for all field samples and quality control samples. Quality control samples to be included in the sample sets:

   - Performance evaluation sample, to be supplied by FERMCO, and analyzed for total Uranium in the same manner as the composites (Item 6, scope of work).

   - Two field blank acetone rinse samples, two field blank filters, two laboratory filter blanks (supplied by Hayden), laboratory matrix spike/spike duplicate, and two container blanks.

TALLY SHEET

RELEASE #: 1000006737 (Can 1 of 1)
PO #: 95-H053 (DCL-SLC)
DATE SHIPPED: 17-May-95
MATERIAL: Periodic Confirmatory Measurements – Filters, Acetone, Water

ANALYSIS: Total U; Gross A/B; Particulates; Gamma Scan

Composite Sample Number	Lot Number	Sample Container Size	AnaLis/ FACTS Number	Gross Weight lbs.	Tare Weight lbs.	Net Weight lbs.
REAG. BLK.	W050-725-P047-6737	PETRI DISH	200153657	0.106	0.088	0.018
REAG. BLK.	W050-725-P047-6737	1L PLST	200153662	0.511	0.141	0.370
REAG. BLK.	W050-725-P047-6737	1L PLST	200153666	0.943	0.141	0.802
EO-1	W050-725-P047-6737	PETRI DISH	200153658	0.106	0.088	0.018
EO-1	W050-725-P047-6737	1L PLST	200153663	0.423	0.141	0.282
EO-1	W050-725-P047-6737	1L PLST	200153667	1.128	0.141	0.987
LO-1	W050-725-P047-6737	PETRI DISH	200153659	0.101	0.088	0.013
LO-1	W050-725-P047-6737	1L PLST	200153664	0.542	0.141	0.401
LO-1	W050-725-P047-6737	1L PLST	200153668	0.934	0.141	0.793
FLD. BLK.	W050-725-P047-6737	PETRI DISH	200153660	0.106	0.088	0.018
FLD. BLK.	W050-725-P047-6737	1L PLST	200153665	0.476	0.141	0.335
FLD. BLK.	W050-725-P047-6737	1L PLST	200153669	1.163	0.141	1.022
				6.537	1.480	5.057

FEMP	RADIOLOGICAL SURVEY REPORT COVER SHEET		SURVEY NUMBER: 95-05-G11-194	
DATE: 5-17-95	LOCATION: Lab	RO [redacted]	BADGE: 10148	PAGE: 1 OF 4
TIME: 0700	LEVEL: 580-	SI [redacted]		
WORK PERMIT NUMBER: N/A		RE [redacted]	BADGE:	
RWP NUMBER:		SIGNATURE:	DATE:	

ATTACHMENTS:		
3	Pg 2 MURF	
	Pg 3 & 4 Teledyne Printout	

REASON FOR SURVEY	
	Sample surveyed for release to go offsite. Gross area smears taken. Direct frisk inside drum
	Release # ~~6666~~ 6737 N/A

SUMMARY:

N/A

No.	Distribution of Copies
1	Radiological Records
2	Files

Supervisor Notified	Time	Date	Notified by:

000112

FS-F-1993-0 (REV. 04/18/95)

MATERIAL UNRESTRICTED RELEASE FORM

SURVEY 95-05-G11-194

DATE:	LOCATION:	R[redacted]	[redacted]	BADGE #:
5-17-95	Lab			10148/721

MODEL	SERIAL NUMBER	TYPE ALPHA or BETA/GAMMA	DOB DATE	(CPM)	CF	(DPM)	INSP./PERFORMANCE TEST YES	NO
LB5100	7	α, β, γ	6-95	.2 / 1.72	.289 / 418	18.2 / 19.8	X	
M-3	77101	β, γ	10-95	60	30	3K	X	
			N					
				A				

TIME	RCT INIT	MATERIAL DESCRIPTION	RELEASE CRITERIA SURF or VOL	RESULTS ALPHA REMOVABLE	ALPHA FIXED + REM	BETA/GAMMA REMOVABLE	BETA/GAMMA FIXED + REM	RELEASE JUSTIFICATION	RECIPIENT	MATERIAL RELEASE EVALUATOR BADGE # and SIGNATURE (1)
0700	bo/DC	2001536667	SURF	-0 *	N/A	0 *	<MDCP		Doug Stack	
		2001536668		2 *		4 *	<MDCP			
		2001536669		2 *		4 *	<MDCP			
		2001536666		-0 *		4 *	<MDCP			
		2001536662		-0 *		0 *	<MDCP			
		2001536665		-0 *		-1 *	<MDCP			
		2001536664		2 *		-1 *	<MDCP			
		2001536663		2 *		8 *	<MDCP			
		2001536658 (AF)		-0 *		0 *	<MDCP	*		N/A
		2001536659 (AF)		5 *		-1 *	<MDCP	*		
		2001536660 (AF)		-0 *		0 *	<MDCP	*		
		2001536657 (AF)		2 *		0 *	<MDCP	*		
		10 gal Can		-0 *		0 *	<MDCP			
					N					
						A				

Comments: Release # 6737 * M:ESH:RCRC; 93 613

(AF) = Air Filter

REVIEW:	INITIAL	DATE

(1) Material Release Evaluator approval required in accordance with RC-DPT-019, (Release of Materials from the Fernald Environmental Management Project), if any of the following conditions exist:

a. Material has areas which are inaccessible for proper survey.
b. Process knowledge is used to support the release decision.
c. Material must be evaluated for the potential of contamination beneath any coating applied while the material was in the Controlled Area.
d. Material must be evaluated for the potential for any volume or in-depth radioactivity within the material matrix.
e. Special case items are being released, such as radioactive consumer products, industrial sources, etc.
f. Material has detectable activity present and the activity is below the contamination limits listed in Attachment A of RC-DPT-019.

FS-F-3915 (06/22/94) equil.

000113

2194

ED MAY 17, 1995 08:57:36
ROUP A SYSTEM #7 SMEARS FOR FREE RELEASE (1.1 MIN)

AMPLE UMBER	GROSS ALPHA	GROSS B-g	REMOV. dpm_a	REMOV. dpm_B-g	TIME OF COUNT
1	0	2	-0	0	08:58:45
2	1	4	2	4	09:00:06
3	1	4	2	4	09:01:27
4	0	4	-0	4	09:02:48
5	0	2	-0	0	09:04:10
6	0	1	-0	-1	09:05:30
7	1	1	2	-1	09:06:51
8	1	6	2	8	09:08:13
9	0	2	-0	0	09:09:34
10	2	1	5	-1	09:10:55
11	0	2	-0	0	09:12:16
12	1	2	2	0	09:13:37
~~12~~	~~0~~	~~5~~	~~-0~~	~~6~~	~~09:14:58~~ bad 5-17-95

PERATION COMPLETE

FEMP RADIOLOGICAL S... REPORT pg 2 of 4
SURVEY # 9505-GH-194 ...D 5-17-95
(...) (...)
BV Dunlap/D. Hesse/ BUR L. / D. Wenal

7194

VED MAY 17, 1995 10:04:45 WE
GROUP A SYSTEM #7 SMEARS FOR FREE RELEASE (1.1 MIN)

SAMPLE NUMBER	GROSS ALPHA	GROSS B-g	REMOV. dpm_a	REMOV. dpm_B-g	TIME OF COUNT
1	0	2	-0	0	10:05:55

OPERATION COMPLETE

FEMP RADIOLOGICAL SURVEY REPORT pg 4 of 4
SURVEY # 95-05-G11-194 DATED 5/17/95
(name) (signature)
RCT: BV Dunlap / D Albers / BV Dunlap / D Albers
REVIEWER:

ACETONE, 3, UN1090, II

POTENTIAL HAZARDS

FIRE OR EXPLOSION

Flammable/combustible material; may be ignited by heat, sparks or flames.
Vapors may travel to a source of ignition and flash back.
Container may explode in heat of fire.
Vapor explosion hazard indoors, outdoors or in sewers.
Runoff to sewer may create fire or explosion hazard.

HEALTH HAZARDS

May be poisonous if inhaled or absorbed through skin.
Vapors may cause dizziness or suffocation.
Contact may irritate or burn skin and eyes.
Fire may produce irritating or poisonous gases.
Runoff from fire control or dilution water may cause pollution.

EMERGENCY ACTION

Keep unnecessary people away; isolate hazard area and deny entry.
Stay upwind; keep out of low areas.
Positive pressure self-contained breathing apparatus (SCBA) and structural firefighters' protective clothing will provide limited protection.
Isolate for 1/2 mile in all directions if tank, rail car or tank truck is involved in fire.
CALL Emergency Response Telephone Number on Shipping Paper first. If Shipping Paper not available or no answer, CALL CHEMTREC AT 1-800-424-9300.
If water pollution occurs, notify the appropriate authorities.

FIRE

Small Fires: Dry chemical, CO_2, water spray or alcohol-resistant foam.
Do not use dry chemical extinguishers to control fires involving nitromethane or nitroethane.
Large Fires: Water spray, fog or alcohol-resistant foam.
Move container from fire area if you can do it without risk.
Apply cooling water to sides of containers that are exposed to flames until well after fire is out. Stay away from ends of tanks.
For massive fire in cargo area, use unmanned hose holder or monitor nozzles; if this is impossible, withdraw from area and let fire burn.
Withdraw immediately in case of rising sound from venting safety device or any discoloration of tank due to fire.

SPILL OR LEAK

Shut off ignition sources; no flares, smoking or flames in hazard area.
Stop leak if you can do it without risk.
Water spray may reduce vapor; but it may not prevent ignition in closed spaces.

Small Spills: Take up with sand or other noncombustible absorbent material and place into containers for later disposal.
Large Spills: Dike far ahead of liquid spill for later disposal.

FIRST AID

Move victim to fresh air and call emergency medical care; if not breathing, give artificial respiration; if breathing is difficult, give oxygen.
In case of contact with material, immediately flush eyes with running water for at least 15 minutes. Wash skin with soap and water.
Remove and isolate contaminated clothing and shoes at the site.

SURVEY RECORD

Date: 5-18-95 Survey Type: Meter: ✓ Smear: ✓ Leak Test: ___ Approved: ___ RSO Date: ___

By: MM

Survey Instrument:

Manufacturer: LUDLUM
Model Number 19
Serial Number: ~~159~~ 102872
Calib. Date: 9-30-94

FERMCO ~~MX-0199~~ IH. mm 5-18-95

BACKGROUND <0.011 mR/hr

Scintillation Counter:

Manufacturer: Ludlum
Model Number: 2929
Lab Instrument No.: 108227

Sample Count Time - 1 min.

	ALPHA	BETA
BLANK (CPM)	0.08	65.03
COUNTER EFFICIENCY (%)	0.3517	0.4083

Mixed Waste Lab Survey Location or Sealed Source Number	Instrument Reading	Disc Smears/Leak Test Swipes						Remarks
		Alpha			Beta			
		CPM	DPM	µCi	CPM	DPM	µCi	
MC95 0341 OUTSIDE	<0.012 mR/hr	0			68			<0.011 mR/hr @ 1 METER
INSIDE	<0.012	0			63			
SAMPLES	<0.012	0			71			

000118

7194

DATACHEM LABORATORIES COOLER RECEIPT CHECKLIST

1. Client Name: FERMCO
2. Project/Task/Site: REL. #: 6737
3. Time/Date of Receipt: 1000 5-18-95
4. # Coolers Received: 1
5. Custody Seals?: (Circle) Present/Absent* Intact/Broken*
   Tamper Evident: Yes/No
6. Condition of Coolers: Acceptable/Unacceptable
7. Comments on Cooler Condition (#6): 1 DRUM
8. Ice Present: Yes/No* Frozen/Melted
   Comments: RAD CHEM ONLY
9. Temp Control: Present/Not Included
10. Location Temp Taken: Control/Between Samples
11. Taken by: (Signature) [signature]
    5-18-95 MARK MENDENHALL (Printed Name)
    5-18-95 1130 (Date/Time)
12. Are all temperatures within project specific guidelines? Yes/No*

*CONTACT PROJECT MANAGER. COMPLETE INCIDENT REPORT.

Cooler Received	DCL Cooler #	Temp	Cooler Received	DCL Cooler #	Temp	Cooler Received	DCL Cooler #	Temp
1	MC95 0341	20 °C	6	MC95	°C	11	MC95	°C
2	MC95	°C	7	MC95	°C	12	MC95	°C
3	MC95	°C	8	MC95	°C	13	MC95	°C
4	MC95	°C	9	MC95	°C	14	MC95	°C
5	MC95	°C	10	MC95	°C	15	MC95	°C

SAMPLE RECEIVING INCIDENT REPORT

Client Sample #'s Affected: _____ DCL Set I.D: _____

DCL Sample #'s Affected: _____

- ☐ Cooler Temps out of Range
- ☐ Missing Cooler
- ☐ Broken/Leaking Samples
- ☐ Missing Samples/Bottles
- ☐ Missing Paperwork
- ☐ Incorrect Preservation
- ☐ Low Sample Volume
- ☐ Incorrect Bottle Type
- ☐ Missing/Incorrect Bottle Labels
- ☐ Other

BRIEFLY DESCRIBE PROBLEM:

Delivered to: _____ Project Manager

Delivered by: _____ Signature/Date/Time

RESPONSE REQUIRED WITHIN 24 HOURS

PROJECT MANAGER'S COMMENTS:

Returned to Sample Receipt by: _____ (Date/Time/Signature)

Accepted for Sample Receipt by: _____ (Date/Time/Signature)

000119

8/95

Project Protocol Worksheet

Client	Hayden Environmental
Project	FERMCO Emissions Tests
Project Manager	Keith Nicholson
Account Number	3025
Project Duration	1 Month

Date 5/17/95

Mailby Days 20 days

Sample Stream	Project/ Method Type
595	EPA Clean Air

QC Requirements

Inorganic		
Blank		
LCS		
MS		
MSD		
MD		
USAEC		
MSA		
Tracer		
Other		
Radiochemistry		
Blank	X	
LCS	X	
MS	X	U only
MSD	X	U only
Tracer		
Other	X	MD
Organic		
Blank		
LCS		
MS/MSD		
USAEC		
Surrogate		
Other		

Preparation Requirements

Inorganic		
CLP SOW		
SW-846 Rev.		
USAEC 1990		
USAEC 1993		
Microwave		
Hotplate		
DCL SOP		
Other		
Radiochemistry		
Hotplate leach		
Muffle furnace		
Total dissolution		
Microwave		
DCL SOP		
Other	X	Mthd. 114
Organic		
CLP SOW		
SW-846 Rev.		
USAEC 1990		
USAEC 1993		
Sonication		
Soxhlet		
Continuous		
Separatory funnel		
DCL SOP		
Other		

Reporting Requirements

Full CLP SOW		
CLP Forms Only		
CLP Disk		
RLIMS	X	
Raw Data		
Custom Disk		
ARF		
QC Forms (specify below)	X	
Case Narrative	X	
Calibration data	X	
Continuing Cal. data		
Reporting Basis		
IRDMIS		
# of TICs		
Counting Error (1 or 2 sigma)		
TPU		
RPD		
RER		
Send raw data	X	
Store raw data		
Other		

LOD/MDL/IDL Requirements

CLP SOW		
SW-846 Rev.		
EPA Clean H2O		
USAEC 1990		
USAEC 1993		
NIOSH		
DCL SOP		
Client specified		
Other	x	Method
QC Limits		
Method	X	
Statistical		
Client specified		

David Robinson

Batch samples with other sets?	(•) yes	( ) no
MS/MD/MSD sample identified?	( ) yes	(•) no
Specific spiking levels identified?	(•) Method	
	( ) DCL SOP	
	( ) other (see comments)	

Comments: Analyze for U by EPA method 114 A-5, and by laser phosphoremetry - report results separately. Desired detection limits are 50 ug/sample for colorimetric U, and 1 ug/sample for phosphoremetry. Analyze for gamma, alpha, and beta for method 114 G-1, A-4 and B-4. Desired detection limits are 10 pCi for alpha and beta, a 20 pCi/sample as Cs-137 for gamma. Liquid samples and filters are to be analyzed for total particulates prior to other analyses. The client will specify how any compositing of liquid samples is to be conducted.

Results due by: 7-Jun-1995

Project/Job/Task: COMM-ENV	Split:	Root Set ID: S95-0498-FE	Reporting Group	FE									#
Client: Hayden Environmental Group, Inc.		Account: 03025	Analysis	Uranium									Bottles
Comments: Verified: AM 5-23-95													

Date Sampled	Field ID Number	DCL Sample Name	DCL Sample ID	QC	Matrix																	Bottles
11-May-1995	REAG BLK	EO 3881			F/LIQ						X											1
10-May-1995	EO-1	EO 3882			F/LIQ						X											1
9-May-1995	LO-1	EO 3883			F/LIQ						X											1
11-May-1995	FLD BLK	EO 3884			F/LIQ						X											1

Received: Date/Time/Signature 5-18-95 / 1000 / Amaryllis McGuire

ORIGINAL FIELD SAMPLE CHAIN-OF-CUSTODY				SAMPLE PREPARATION / ANALYSIS CHAIN-OF-CUSTODY Sample Prep/Analysis for: _____ Lab Notebook No.: _____ Prepared/Analyzed by: _____ Date/Time: _____			
Relinquished By: (Signature)	Date/Time	Received By: (Signature)	Reason for Transfer/ Storage Location	Relinquished By: (Signature)	Date/Time	Received By: (Signature)	Reason for Transfer/ Storage Location
Amaryllis McGuire							

Check box if there is a continuation page ☐

Printed 5/25/1995 11:46

Form: COFC1.01-SWV2.30

000121

4 of 19

7194

DATA CHEM

SAMPLE DISPOSAL CONTROL FORM

Chem Laboratories ID Number: S95-0498-FE Analyst: NSC

of Analysis: 6/20/95 Analyzed For: Uranium

DISPOSAL CLASSIFICATION†

le Number	Not Hazardous	Hazardous	Code‡	Explanation
3881	[✓]	[ ]		
3882	[✓]	[ ]		* Analysis done by rad. chem. group
3883	[✓]	[ ]		confirms sample as not hazardous.
3884	[✓]	[ ]		
	[ ]	[ ]		
	[ ]	[ ]		
	[ ]	[ ]		
	[ ]	[ ]		

nple (either solid or liquid) is to be classified as dous waste upon disposal if it exhibits any of llowing conditions:

(if classified as hazardous)
If it or its extract contains levels of the contaminants ≥ those specified in Table 1.

If it contains significant levels of organic solvents.

If it is corrosive (pH ≤ 2 or ≥ 12.5).

If it is reactive or explosive.

If it contains ≥ 50ppm PCB.

If it is determined by the chemist or manager that the sample is hazardous, poisonous, or toxic (e.g., some of the pesticide formulations). If this code is used, an explanation must be provided.

TABLE 1 TCLP levels.

EPA HW No.	Contaminant	Limit (mg/l)
D004	Arsenic	5.000
D005	Barium	100.0
D018	Benzene	0.5
D006	Cadmium	1.0
D019	Carbon Tetrachloride	0.5
D020	Chlordane	0.03
D021	Chlorobenzene	100.0
D022	Chloroform	6.0
D007	Chromium	5.0
D023	o-Cresol	200.0*
D024	m-Cresol	200.0*
D025	p-Cresol	200.0*
D026	Cresol	200.0*
D016	2,4-D	10.0
D027	1,4-Dichlorobenzene	7.5
D028	1,2-Dichloroethane	0.5
D029	1,1-Dichloroethylene	0.7
D030	2,4-Dinitrotoluene	0.13
D012	Endrin	0.02
D031	Heptachlor	0.008
D032	Hexachlorobenzene	0.13
D033	Hexachlorobutadiene	0.5
D034	Hexachloroethane	3.0
D008	Lead	5.0
D013	Lindane	0.4
D009	Mercury	0.2
D014	Methoxychlor	10.0
D035	Methyl Ethyl Ketone	200.0
D036	Nitrobenzene	2.0
D037	Pentachlorophenol	100.0
D038	Pyridine	5.0
D010	Selenium	1.0
D011	Silver	5.0
D039	Tetrachloroethylene	0.7
D015	Toxaphene	0.5
D040	Trichloroethylene	0.5
D041	2,4,5-Trichlorophenol	400.0
D042	2,4,6-Trichlorophenol	2.0
D017	2,4,5-TP Silvex	1.0
D043	Vinyl Chloride	0.2

* If the concentrations for o-, m-, and p-cresol can not be differentiated, the total cresol concentration is used.

The constituents in bold are the original EP toxicity constituents.

000122

DataChem Laboratories

PROJECT RESOURCE UTILIZATION SUMMARY

te: 6/21/95

:L Reference #: S95-0498-FE

mpany/Agency Name: Hayden Environmental Group, Inc

alytes/Method: Uranium / ASTM E 318-91

BOR

Date	Personnel	Total Hours
6/19/95	RSC	9
6/20/95	RSC	10
6/20/95	SJS	8
6/21/95	RSC	8.5
6/22/95	RSC	1.5

PPLIES

Item	Quantity
Evergreen Disp. Centrifuge tubes	25

UIPMENT USAGE

Major Instrumentation	Total Hours
Hitachi 100-20	1.5

000122

DATA CHEM
LABORATORIES
A SORENSON COMPANY

Case Narrative

Analysis:	Gross Alpha/ Gross Beta	**Client:**	Hayden Environmental Group
		Account:	3025
Preparation SOP#:	WR-DC-200	**Matrix:**	Filter/ Liquid
Analysis SOP#:	WR-EP-300		
DCL Set ID's:	S95-0498-DE		

General Set Information: The above sample set consisted of four filter samples with additional liquid material that was added upon completion of the dissolution of the filter.

Method Summary: The sample was ashed in a muffle furnace, wet ashed using hydrofluoric acid followed by ashing with concentrated nitric acid. At this point, the additional liquid sample material was added and the combined volume was reduced to approximately 3 mL. The sample was transferred into a PMP container and diluted to 50 mL. A 10 mL aliquot was removed to prepare the sample for analysis. The sample was evaporated and transferred to a flamed, acid-washed, stainless steel planchet and dried under infra-red lamps. After cooling, the prepared sample was counted on a gas proportional counter.

Sample Preparation: The samples were analyzed according to procedure with no exceptions.

Quality Control Data:

Laboratory Control Sample: One LCS was analyzed within this data set and met all QC requirements.

Blank: One blank was analyzed within this data set and was within QC requirements.

Matrix Spike/ Matrix Spike Duplicate: One matrix spike and matrix spike duplicate was analyzed within this data set. The recovery for the matrix spike was 105% and was flagged by QC. Upon review, it was determined that this result was acceptable.

This report is 13 total pages.

Instrument QC: All initial and continued calibrations were within QC requirements.

NC/CAR: No NC/ CARs were required for this lot.

Miscellaneous Comments: The contractual control limits of 10 pCi/ sample for alpha and beta were met for all samples.

Robin Lully 6/14/95
Robin Lully Date

DATA CHEM LABORATORIES
A Sorenson Company

COVER FORM (TYPE I)
SINGLE METHOD ANALYSES

SUMMARY INFORMATION

Form RLIMS63M-V1.0
06149509532299
Page 1

G954P01Y

Date Reported.....:

Date Printed.....: 14-JUN-95 09:53
DCL Client Group..: S95-0498-DE

Client Ref Number.: Not Provided
Release Number....: Not Provided

Analysis Method...: WR-EP-300

Hayden Environmental Group, Inc.
Attention: David Robinson
561 Congress Park Drive
Dayton, OH 45459

Client Sample ID	Lab Sample ID
BL-57147-1	BL-57147-1
QC-57147-1	QC-57147-1
REAG BLK	EO 3881
EO-1	EO 3882
LO-1	EO 3883
FLD BLK	EO 3884

Robin Lully
Analyst: Robin D. Lully

Christy Webster
Reviewer:

Clissell
Laboratory Supervisor:

960 West LeVoy Drive / Salt Lake City, Utah 84123-2547 / (801) 266-7700

DATA CHEM LABORATORIES
A Sorenson Company

FORM H (TYPE I)
SINGLE METHOD ANALYSES

SAMPLE GROUP COMMENTS

Form RLIMS63H-V1.0
06149509532299
Page 2

G954P01Y

Date Printed.....: 14-JUN-95 09:53
DCL Client Group..: S95-0498-DE

Client Name.....: Hayden Environmental Group, Inc.

Release Number....: Not Provided

General Information

The DCL QC Database maintains all numerical figures which are input from the pertinent data source. These data have not been rounded to significant figures nor have they been moisture corrected. Reports generated from the system, however, list data which have been rounded to the number of significant figures requested by the client or deemed appropriate for the method. This may create minor discrepancies between data which appear on the QC Summary Forms (Forms B-G) and those that would be calculated from rounded analytical results. Additionally, if a moisture correction is performed, differences will be observed between the QC data and the surrogate data reported on Form A (or other report forms) and corresponding data reported on QC Summary Forms. In these cases, the Form A will indicate the "Report Basis" as well as the moisture value used for making the correction.

Symbol Definitions

ND - Not Detected above the MDL or IDL (LLD or MDC for radiochemistry).
B - For organic analysis the qualifier indicates that this analyte was found in the method blank. For inorganic analysis the qualifier signifies the value is between the IDL and PQL.
J - The qualifier indicates that the value is between the MDL and the PQL. It is also used for indicating an estimated value for tentatively identified compounds in mass spectrometry where a 1:1 response is assumed.

DATA CHEM LABORATORIES
A Sorenson Company

FORM A (TYPE I)
SINGLE METHOD ANALYSES

SAMPLE ANALYSIS DATA SHEET

Form RLIMS63A-V1.0
06149511294388
Page 3

S955802Q

Date Printed.....: 14-JUN-95 11:29
Client Sample Name: BL-57147-1
DCL Sample Name...: BL-57147-1

nt Name.....: Hayden Environmental Group, Inc.
nt Ref Number....: Not Provided
ling Site.....: Not Applicable
ase Number.....: Not Provided

Matrix.....: F/LIQ
Date Sampled.....: Not Applicable
Reporting Units...: pCi/sample
☐ As Received ☐ Dried

Received.....: Not Applicable
Client Group.....: S95-0498-DE

Preparation Group: G955802X
Prepared.....: 09-JUN-95 00:00
aration Method...: WR-DC-200
uot Weight/Volume: 350.0 mL
Weight/Volume....: Not Required

DCL Analysis Group: G955802X
Analysis Method...: WR-EP-300
Instrument Type...: GPC
Instrument ID.....: HT-1000-A2
Column Type.....: Not Applicable

ytical Results

yte	Date Analyzed	Detection Limit	Result±Error ±TPU Error	Flag	Dilution	CRDL
s Alpha	09-JUN-95 00:00	1.2E-1	1.6E-1±8.1E-2 ±8.7E-2		1	10
s Beta	09-JUN-95 00:00	3.4E-1	9.9E-1±2.1E-1 ±2.9E-1		1	10

960 West LeVoy Drive / Salt Lake City, Utah 84123-2547 / (801) 266-7700
FAX (801) 268-9992

DATA CHEM LABORATORIES
A Sorenson Company

FORM A (TYPE I)
SINGLE METHOD ANALYSES

SAMPLE ANALYSIS DATA SHEET

Form RLIMS63A-V1.0
06149509532299
Page 4

S955802R

Date Printed.....: 14-JUN-95 09:53
Client Sample Name: QC-57147-1
DCL Sample Name...: QC-57147-1

Client Name.....: Hayden Environmental Group, Inc.
Client Ref Number....: Not Provided
Sampling Site.....: Not Applicable
Release Number.....: Not Provided

Matrix.....: F/LIQ
Date Sampled.....: Not Applicable
Reporting Units...: pCi/~~lit~~ Sample
☐ As Received ☐ Dried

Date Received.....: Not Applicable
DCL Client Group.....: S95-0498-DE

DCL Preparation Group: G955802X
Date Prepared.....: 09-JUN-95 00:00
Preparation Method...: WR-DC-200
Aliquot Weight/Volume: 350.0 mL
Net Weight/Volume....: Not Required

DCL Analysis Group: G955802X
Analysis Method...: WR-EP-300
Instrument Type...: GPC
Instrument ID.....: HT-1000-A3
Column Type.....: Not Applicable

Analytical Results

Analyte	Date Analyzed	Detection Limit	Result±Error ±TPU Error	Flag	Dilution	CRDL
Gross Alpha	09-JUN-95 00:00	1.8E-1	7.0E1±1.3E0 ±1.4E1		1	10
Gross Beta	09-JUN-95 00:00	3.8E-1	5.6E1±1.0E0 ±1.1E1		1	10

R. Gilley
6/14/95

DATA CHEM LABORATORIES
A Sorenson Company

FORM A (TYPE I)
SINGLE METHOD ANALYSES

SAMPLE ANALYSIS DATA SHEET

Form RLIMS63A-V1.0
06149509532299
Page 5

S954P067

Date Printed.....: 14-JUN-95 09:53
Client Sample Name: REAG BLK |153657,62,66
DCL Sample Name...: EO 3881

:t Name.....: Hayden Environmental Group, Inc.
:t Ref Number....: Not Provided
ing Site.....: Rel# 1000006737
se Number.....: Not Provided

Matrix.....: F/LIQ
Date Sampled.....: 11-MAY-95 00:00
Reporting Units...: pCi/~~Lit~~ Sample
Report Basis.....: [X] As Received [ ] Dried

Received.....: 18-MAY-95 00:00
lient Group.....: S95-0498-DE

reparation Group: G955802X
Prepared.....: 09-JUN-95 00:00
ration Method...: WR-DC-200
ot Weight/Volume: 10.0 mL
eight/Volume....: Not Required

DCL Analysis Group: G955802X
Analysis Method...: WR-EP-300
Instrument Type...: GPC
Instrument ID.....: HT-1000-A2
Column Type.....: Not Applicable

ytical Results

te	Date Analyzed	Detection Limit	Result±Error ±TPU Error	Flag	Dilution	CRDL
Alpha	09-JUN-95 00:00	5.6E-1	5.1E0±6.8E-1 ±1.2E0		5	10
Beta	09-JUN-95 00:00	8.9E-1	5.5E0±7.3E-1 ±1.3E0		5	10

Jelly
4/95

60 West LeVoy Drive / Salt Lake City, Utah 84123-2547 / (801) 266-7700

DATA CHEM LABORATORIES
A Sorenson Company

FORM A (TYPE I)
SINGLE METHOD ANALYSES

SAMPLE ANALYSIS DATA SHEET

Form RLIMS63A-V1.0
06149509532299
Page 6

S954P068

Date Printed.....: 14-JUN-95 09:53
Client Sample Name: EO-1 |153658,63,67
DCL Sample Name...: EO 3882

Client Name.....: Hayden Environmental Group, Inc.
Client Ref Number....: Not Provided
Sampling Site.....: Rel# 1000006737
Release Number.....: Not Provided

Matrix.....: F/LIQ
Date Sampled.....: 10-MAY-95 00:00
Reporting Units...: pCi/~~Lit~~ Sample
Report Basis.....: ☒ As Received ☐ Dried

Date Received.....: 18-MAY-95 00:00
DCL Client Group.....: S95-0498-DE

DCL Preparation Group: G955802X
Date Prepared.....: 09-JUN-95 00:00
Preparation Method...: WR-DC-200
Aliquot Weight/Volume: 10.0 mL
Net Weight/Volume....: Not Required

DCL Analysis Group: G955802X
Analysis Method...: WR-EP-300
Instrument Type...: GPC
Instrument ID.....: HT-1000 -A3
Column Type.....: Not Applicable

Analytical Results

Analyte	Date Analyzed	Detection Limit	Result±Error ±TPU Error	Flag	Dilution	CRDL
Gross Alpha	09-JUN-95 00:00	8.6E-1	4.2E0±7.8E-1 ±1.1E0		5	10
Gross Beta	09-JUN-95 00:00	9.9E-1	2.0E0±7.4E-1 ±8.4E-1		5	10

R. Tully
6/14/95

DATA CHEM LABORATORIES
A Sorenson Company

FORM A (TYPE I)
SINGLE METHOD ANALYSES

SAMPLE ANALYSIS DATA SHEET

Form RLIMS63A-V1.0
06149509532299
Page 7

S954P069

Date Printed.....: 14-JUN-95 09:53
Client Sample Name: LO-1 |153659,64,68
DCL Sample Name...: EO 3883

Client Name.....: Hayden Environmental Group, Inc.
Client Ref Number....: Not Provided
Sampling Site.....: Rel# 1000006737
Release Number.....: Not Provided

Matrix.....: F/LIQ
Date Sampled.....: 09-MAY-95 00:00
Reporting Units...: pCi/~~Lit~~ Sample
Report Basis.....: ☒ As Received ☐ Dried

Date Received.....: 18-MAY-95 00:00
DCL Client Group.....: S95-0498-DE

DCL Preparation Group: G955802X
Date Prepared.....: 09-JUN-95 00:00
Preparation Method...: WR-DC-200
Aliquot Weight/Volume: 10.0 mL
Net Weight/Volume....: Not Required

DCL Analysis Group: G955802X
Analysis Method...: WR-EP-300
Instrument Type...: GPC
Instrument ID.....: HT-1000 - A4
Column Type.....: Not Applicable

Analytical Results

Analyte	Date Analyzed	Detection Limit	Result±Error ±TPU Error	Flag	Dilution	CRDL
Gross Alpha	09-JUN-95 00:00	7.7E-1	6.5E0±8.4E-1 ±1.5E0		5	10
Gross Beta	09-JUN-95 00:00	1.1E0	2.9E0±8.3E-1 ±1.0E0		5	10

R. Jolley
6/14/95

DATA CHEM LABORATORIES
A Sorenson Company

FORM A (TYPE I)
SINGLE METHOD ANALYSES

SAMPLE ANALYSIS DATA SHEET

Form RLIMS63A-V1.0
06149509532299
Page 8

S954P06B

Date Printed.....: 14-JUN-95 09:53
Client Sample Name: FLD BLK |153660,65,69
DCL Sample Name...: EO 3884

nt Name.....: Hayden Environmental Group, Inc.
nt Ref Number....: Not Provided
ling Site.....: Rel# 1000006737
ase Number.....: Not Provided

Matrix.....: F/LIQ
Date Sampled.....: 11-MAY-95 00:00
Reporting Units...: pCi/~~Lit~~ Sample
Report Basis.....: ☒ As Received ☐ Dried

Received.....: 18-MAY-95 00:00
Client Group.....: S95-0498-DE

Preparation Group: G955802X
Prepared.....: 09-JUN-95 00:00
ration Method...: WR-DC-200
ot Weight/Volume: 10.0 mL
Weight/Volume....: Not Required

DCL Analysis Group: G955802X
Analysis Method...: WR-EP-300
Instrument Type...: GPC
Instrument ID.....: HT-1000-B2
Column Type.....: Not Applicable

ytical Results

te	Date Analyzed	Detection Limit	Result±Error ±TPU Error	Flag	Dilution	CRDL
Alpha	09-JUN-95 00:00	7.1E-1	5.3E0±7.6E-1 ±1.3E0		5	10
Beta	09-JUN-95 00:00	8.6E-1	4.4E0±6.9E-1 ±1.1E0		5	10

D. Jolly
1/14/95

DATA CHEM LABORATORIES
A Sorenson Company

FORM B (TYPE I)
SINGLE METHOD ANALYSES

QUALITY CONTROL DATA SHEET
LABORATORY CONTROL SAMPLE (LCS)

Form RLIMS63B-V1.0
06149511185670
Page 3

S955802R

Client Name.....: Hayden Environmental Group, Inc.
Release Number.....: Not Provided

Matrix.....: F/LIQ
Reporting Units.....: pCi/~~L~~ Sample

LCS Source.....: Pu-239 ISL 2/15
Sr-90 ISL 2/25

DCL Preparation Group: G955802X
Date Prepared.....: 09-JUN-95 00:00
Preparation Method...: WR-DC-200

Date Printed.....: 14-JUN-95 11:18
DCL Sample Name...: QC-57147-1

DCL Analysis Group: G955802X
Analysis Method...: WR-EP-300
Instrument Type...: GPC
Instrument ID.....: HT-1000
Column Type.....: Not Applicable

QC Limit Type.....: Method

Analytical Results

Analyte	Date Analyzed	Target	Result	Percent Recovery	QC Limits	QC Flag
Gross Alpha	09-JUN-95 00:00	68.8	69.7	101.	40.0/160.	
Gross Beta	09-JUN-95 00:00	50.4	55.8	111.	50.0/150.	

R. Jolly
6/14/95

960 West LeVoy Drive / Salt Lake City, Utah 84123-2547 / (801) 266-7700

DATA CHEM LABORATORIES
A Sorenson Company

FORM C (TYPE I)
SINGLE METHOD ANALYSES

QUALITY CONTROL DATA SHEET
BLANK SAMPLE

Form RLIMS63C-V1.0
06149511185670
Page 4

S955802Q

nt Name.....: Hayden Environmental Group, Inc.
ase Number.....: Not Provided

ix.....: F/LIQ
rting Units.....: pCi/sample

Preparation Group: G955802X
Prepared.....: 09-JUN-95 00:00
aration Method...: WR-DC-200

Date Printed.....: 14-JUN-95 11:18
DCL Sample Name...: BL-57147-1

DCL Analysis Group: G955802X
Analysis Method...: WR-EP-300
Instrument Type...: GPC
Instrument ID.....: HT-1000
Column Type.....: Not Applicable

lytical Results

yte	Date Analyzed	Result	CRDL
s Alpha	09-JUN-95 00:00	0.163	1
s Beta	09-JUN-95 00:00	0.992	4

14/95

960 West LeVoy Drive / Salt Lake City, Utah 84123-2547 / (801) 266-7700

DATA CHEM LABORATORIES
A Sorenson Company

FORM F (TYPE I)
SINGLE METHOD ANALYSES

QUALITY CONTROL DATA SHEET
MATRIX SPIKE SAMPLE
MATRIX SPIKE DUPLICATE SAMPLE

Form RLIMS63F-V1.0
06149511185670
Page 5

S954Y05L

Client Name.....: Hayden Environmental Group, Inc.
Release Number.....: Not Provided

Matrix.....: WATER
Reporting Units.....: pCi/L Sample

DCL Preparation Group: G955802X
Date Prepared.....: 09-JUN-95 00:00
Preparation Method...: WR-EP-300

Date Printed.....: 14-JUN-95 11:18
DCL Sample Name...: MXS 03847MS

DCL Analysis Group: G955802X
Analysis Method...: WR-EP-300
Instrument Type...: GPC
Instrument ID.....: ~~GPC~~ HT-1000
Column Type.....: Not Applicable

QC Limit Type.....: Method

Analytical Results

Analyte	Date Analyzed	Sample Result	Spiked Result	Spike Added	Percent Recovery	QC Limits	QC Flag
Gross Alpha	12-JUN-95 00:00	0.159	73.3	69.4	105.	45.0/105.	*
Gross Beta	12-JUN-95 00:00	1.13	50.6	51.9	95.3	45.0/105.	

S954Y05M

DCL Sample Name...: MXS 03847MSD

Analytical Results

Analyte	Date Analyzed	Duplicate Result	Percent Recovery	Mean	Range	RPD	QC Limits	QC Flag
Gross Alpha	12-JUN-95 00:00	66.9	96.1	70.1	6.42	9.2	0.000/50.0	
Gross Beta	12-JUN-95 00:00	51.9	101.	51.3	1.35	2.6	0.000/50.0	

R. Jolley
6/14/95

DATA CHEM LABORATORIES
A SORENSON COMPANY

Datapackage Table of Contents

Information pertaining to this datapackage is divided into the four categories listed below (see colored divider sheets for an inventory list of each category). If an item on the inventory is not applicable, an "NA" is placed in the corresponding check box. A Case Narrative immediately precedes this Table of Contents and contains pertinent information about this datapackage.

Analytical Forms ..... Yellow
Sample Tracking Documentation ..... Pink
Analytical Documentation ..... Blue
Raw Data ..... Green

♦ ♦ ♦ ♦ ♦ ♦ ♦ ♦ ♦ ♦

Analytical Forms
Inventory Checklist

[X] Case Narrative

[NA] IRDMIS	[NA] Commercial Forms
[ ] Data Review and Approval Form	[ ] Analytical or Environmental Report Form
[ ] IRDMIS Reports	[ ] Set Comments
[ ] GC/MS TICs	[ ] Applicable QC Sheets

[X] RLIMS Forms	
[X] Cover Form	[X] Matrix Spike/Matrix Spike Duplicate Sample (Form F)
[X] Sample Group Comments (Form H)	[NA] Surrogate Summary (Form G)
[X] Sample Analysis Data Sheet (Form A)	[NA] Initial Calibration Form
[X] Laboratory Control Sample (Form B)	[NA] Continuing Calibration Form
[X] Blank Sample (Form C)	[NA] Serial Dilution Form
[NA] Matrix Spike Sample (Form D)	[NA] Endrin Breakdown or BFB/DFTPP GC/MS Tuning Form
[N/A] Matrix Duplicate Sample (Form E)	[NA] Internal Standard Form

Analytical Forms
Reviewer Checklist

X The Analytical Forms Inventory Checklist above is complete.

X The Case Narrative was completed in accordance with procedures in DCL SOP XX-DC-020, "Datapackage Preparation and Validation."

X Only the correct report forms are used (IRDMIS or Commercial Forms or RLIMS Forms).

X All fields on the report forms are complete with the correct information, including signatures.

X Results for all samples are reported per client request.

X Units, methods, and dates are correct.

X Sample and/or set comments are complete.

000136

Assembled by: Robin Jelly 6/14/95 (Signature, Date) Reviewed by: Christy Webster 6-15-95 (Signature, Date)

DATA CHEM LABORATORIES
A SORENSON COMPANY

Sample Tracking Documentation
Inventory Checklist

- [X] LIMS Grouping Reports
- [X] DataChem Laboratories (DCL) Chain-of-Custody Record
- [X] DCL Sample Work Order
- [NA] Copy of numbered Nonconformance/Corrective Action Report (NC/CAR)
- [NA] Copy of Client-Related Problem Report (CPR)

Sample Tracking Documentation
Reviewer Checklist

X The Sample Tracking Documentation Inventory Checklist above is complete.

X DCL Chain-of-Custody Record provides signatures for the sample portion reported in this data package.

X DCL Chain-of-Custody Record was completed in accordance with procedures in DCL SOP XX-DC-006 "Chain-of-Custody and Laboratory Tracking."

X Methods specified on the Sample Work Order were performed or an explanation for deviations is provided.

X Special instructions on the Sample Work Order were followed.

X Project Management instructions on the Project Protocol Worksheet were followed.

X Client's requests were met or an explanation is provided in the Case Narrative.

NA NC/CAR and/or CPR were completed in accordance with procedures in DCL SOP QC-DC-006 "Nonconformance/Corrective Action Report (NC/CAR) Procedures."

000137

embled by: Robin Tully 6/14/95 Reviewed by: Christy Webster 6/5-95
Signature Date Signature Date

DataChem Laboratories
LIMS - Sample Master System
Preparation Group Report

:e: 14-JUN-1995 13:41
ɜr: LULLY

Page: 1
RLIMS15-V1.1

ɜparation Run Name: G955802X

Group ID: G955802X

ıples: 18

Laboratory Sample Name	Field Sample Name	Laboratory Sample ID	Laboratory Group Name	Accnt. Number
BL-57147-1	BL-57147-1	S955802Q	S95-0498-DE	03025
QC-57147-1	QC-57147-1	S955802R	S95-0498-DE	03025
EO 3881	REAG BLK	S954P067	S95-0498-DE	03025
EO 3882	EO-1	S954P068	S95-0498-DE	03025
EO 3883	LO-1	S954P069	S95-0498-DE	03025
EO 3884	FLD BLK	S954P06B	S95-0498-DE	03025
MXS 03841	E14SW0800390	S954Y05C	RX-0047-BC	03107
MXS 03842	E14SW0800393	S954Y05D	RX-0047-BC	03107
MXS 03843	E14SW0800395	S954Y05F	RX-0047-BC	03107
MXS 03844	E14SW0800398	S954Y05G	RX-0047-BC	03107
MXS 03845	E14SW0800400	S954Y05H	RX-0047-BC	03107
MXS 03846	E14SW0800403	S954Y05J	RX-0047-BC	03107
MXS 03847	E14SW0800406	S954Y05K	RX-0047-BC	03107
MXS 03847MS	4SW0800406MS	S954Y05L	RX-0047-BC	03107
MXS 03847MSD	SW0800406MSD	S954Y05M	RX-0047-BC	03107
MXS 03848	E14SW0800409	S954Y05N	RX-0047-BC	03107
MXS 03849	E14SW0800412	S954Y05P	RX-0047-BC	03107
MXS 03850	E14SW0800415	S954Y05Q	RX-0047-BC	03107

-- END OF LISTING -----

Lully
1/4/95

CHAIN OF CUSTODY

Results due by: 7-Jun-1995

Project/Job/Task: COMM-ENV | Split: | Root Set ID: S95-0498 * | Reporting Group

Client: Hayden Environmental Group, Inc. | Account: 03025

Comments:

Verified: AMG 5-23-95

Date Sampled	Field ID Number	DCL Sample Name	DCL Sample ID	QC	Matrix						Analysis: Total Uranium (CE)	Gross Alpha (DE)	Gross Beta (DE)	Gamma scan (EE)						# Bottles
1-May-1995	REAG BLK	EO 3881			F/LIQ						X	X	X	X						1
0-May-1995	EO-1	EO 3882			F/LIQ						X	X	X	X						1
0-May-1995	LO-1	EO 3883			F/LIQ						X	X	X	X						1
1-May-1995	FLD BLK	EO 3884			F/LIQ						X	X	X	X						1

Received: Date/Time/Signature 5-18-95 / 1600 / Amarylis McClure

ORIGINAL FIELD SAMPLE CHAIN-OF-CUSTODY

Relinquished By: (Signature)	Date/Time	Received By: (Signature)	Reason for Transfer/ Storage Location
Amarylis McClure	06/07/95 1110	Dave Reddick	Prep Total U, α, β, γ α
Dave Reddick	06/07/95 1530	Mark A. Barnett	γ Scan
Mark A. Barnett	6/8/95 1600	Dave Reddick	Total U
Dave Reddick	6/9/95 0830	Robin Jully	gross α/β
Robin Jully	6/12/95 1600	Sally Cajuhlyn	U and
Sally Cajuhlyn	6/12/95 1605	L-84-1 RJC 6/12/95	Storage/L-84-1

SAMPLE PREPARATION / ANALYSIS CHAIN-OF-CUSTODY

Sample Prep/Analysis for: _____ Lab Notebook No.: _____

Prepared/Analyzed by: _____ Date/Time: _____

Relinquished By: (Signature)	Date/Time	Received By: (Signature)	Reason for Transfer/ Storage Location

Check box if there is a continuation page ☐

Printed 5/22/1995 14:05

Form: COFC1.01-SWV2.30 000139

7194

Sample Work Order

Clearance: _____
ect Manager: Keith R. Nicholson
nt: Hayden Environmental Group, Inc.
ount: 03025
ect/Task: COMM-ENV
e Received: 18-May-1995
e for Mailing Report: 17-Jun-1995

RUSH

DCL Root Set ID: S95-0498 *
DCL Lab. Name: EO 3881–EO 3884
Total # Samples: 4
Sample Medium: F/LIQ

Earliest Sampling Date: 9-May-1995
Preparation Type:

p	Radiochemistry Analytes Requested	Latest Prep. Date	Latest Anal. Date	No. of Samp.	Split ID	Storage Location	Analysis/Prep. Method	Inst.	
	Total Uranium	29-May-1995[c]	8-Jul-1995[c]	4		Rad lab			
	Gross Alpha	8-Jun-1995[c]	8-Jul-1995[c]	4		↓			
	Gross Beta	8-Jun-1995[c]	8-Jul-1995[c]	4					
	Gamma scan	29-May-1995[c]	8-Jul-1995[c]	4		↓			

ed on date of collection

cial Instructions: _____

tion Manager Approval: Charlie C. Walker 5-24-95 Date

000140

er Sections Receiving Sample Portions: IM, IW

CHAIN-OF-CUSTODY

Results due by: 7-Jun-1995

Project/Job/Task: COMM-ENV	Split:	Root Set ID: S95-0498 *	Reporting Group	CE	DE	DE	EE						#
Client: Hayden Environmental Group, Inc.		Account: 03025	Analysis	Total Uranium	Gross Alpha	Gross Beta	Gamma scan						Bottles
Comments: Verified: AMG 5-23-95													

Date Sampled	Field ID Number	DCL Sample Name	DCL Sample ID	QC	Matrix					Total Uranium	Gross Alpha	Gross Beta	Gamma scan						Bottles
11-May-1995	REAG BLK	EO 3881			F/LIQ					X	X	X	X						1
10-May-1995	EO-1	EO 3882			F/LIQ					X	X	X	X						1
9-May-1995	LO-1	EO 3883			F/LIQ					X	X	X	X						1
11-May-1995	FLD BLK	EO 3884			F/LIQ					X	X	X	X						1

Received: Date/Time/Signature 5-18-95 / 1000 / Amarylis McClure

ORIGINAL FIELD SAMPLE CHAIN-OF-CUSTODY			
Relinquished By: (Signature)	Date/Time	Received By: (Signature)	Reason for Transfer/ Storage Location
Amarylis McClure			

SAMPLE PREPARATION / ANALYSIS CHAIN-OF-CUSTODY			
Sample Prep/Analysis for: _____		Lab Notebook No.: _____	
Prepared/Analyzed by: _____		Date/Time: _____	
Relinquished By: (Signature)	Date/Time	Received By: (Signature)	Reason for Transfer/ Storage Location

Check box if there is a continuation page ☐

000141

Printed 5/22/1995 14:05

Form: COFC1.01-SWV2.30

000141

4 2 1 9

OFF-SITE LABORATORY CUSTODY TRANSFER AND ANALYSIS REQUEST RECORD (OCTR)

PURCHASE ORDER NO.: 95-H053	OFF-SITE LAB CONTACT: KEITH NICHOLSON	REPORT TO: FERMCO P.O. BOX 398704 CINCINNATI, OH 45239-8704
RELEASE NO.: 1000006737	FERMCO CONTACT/PHONE: RICH DAIN (513) 738-9157	
SAMPLE SHIPMENT DATE: 5-17-95	REQUIRED REPORT DATE: PER CONTRACT (NORMAL)	RECEIVING LAB NAME: DATACHEM
SAMPLE SHIPPER: M. CORNELL	SAMPLE TEAM: EFFL. MON. & CNTL	RECEIVING LAB ADDRESS: 960 W. LEVOY DR. SALT LAKE CITY, UT 84123

	SAMPLE NUMBER		SAMPLE DESCRIPTION/TYPE/CODE	DATE/TIME COLLECTED	CONTAINER TYPE	SAMPLE VOLUME	PRESERVATION	ANALYSIS REQUESTED	CONDITION UPON RECEIPT*
1	200153657	REAG. BLK.	G.F. FILTER	5/11/95 1030	PETRI DISH	1 x FLTR	NONE	* PARTICULATES ED 3868	ANALYSIS ED 3881
2	200153662	REAG. BLK.	ACETONE	5/11/95 1030	PLASTIC	1 x 1L	NONE	* 3869	
3	200153666	REAG. BLK.	D.I. WATER	5/11/95 1030	PLASTIC	1 x 1L	NONE	* 3870	CAN SEAL NO. 2470
4	200153658	EO-1	G.F. FILTER	5/10/95 0930	PETRI DISH	1 x FLTR	NONE	* 3871	3882
5	200153663	EO-1	ACETONE	5/10/95 0930	PLASTIC	1 x 1L	NONE	* 3872	
6	200153667	EO-1	D.I. WATER	5/10/95 0930	PLASTIC	1 x 1L	NONE	* 3873	
7	200153659	LO-1	G.F. FILTER	5/9/95 1450	PETRI DISH	1 x FLTR	NONE	* 3874	3883
8	200153664	LO-1	ACETONE	5/9/95 1450	PLASTIC	1 x 1L	NONE	* 3875	
9	200153668	LO-1	D.I. WATER	5/9/95 1450	PLASTIC	1 x 1L	NONE	* 3876	
10	200153660	FLD BLK	G.F. FILTER	5/11/95 1030	PETRI DISH	1 x FLTR	NONE	* 3877	3884
11	200153665	FLD BLK	ACETONE	5/11/95 1030	PLASTIC	1 x 1L	NONE	* 3879	

SPECIAL INSTRUCTIONS: TOTAL U ANALYSES ARE TO BE PERFORMED BY LASER PHOSPHORMETRY & EITHER COLORIMETRY OR FLUOMETRY (AS LISTED IN METHOD 114)

* = TOTAL U (CE); GROSS A/B (DE); PARTICULATES (AE); GAMMA SCAN (EE)

SAMPLE PLAN NUMBER:	PROJECT NAME:	CHARGE NUMBER:
N/A	PERIODIC CONFIRMATORY MSMTS.	7 ECB2

CAN NO.:	SEAL NO.:	CAN NO.:	SEAL NO.:	CAN NO.:	SEAL NO.:	CAN NO.:	SEAL NO.:	CAN NO.:	SEAL NO.:	CAN NO.:	SEAL NO.:
				CAN w/ 5-17-95 COOLER	SEALED	w/ C-O-C	TAPE				

RELINQUISHED			RECEIVED		
RELINQUISHED BY	DATE	TIME	DATE	TIME	RECEIVED BY
1. Mark Cornell	5-17-95	1300	1. 5-18-95	1000	Stephanie Smith
2. Stephanie Smith	5-18-95	1030	2. 5-18-95	1035	Amaryllis McGuire
3.			3.		

000142

NO.	DISTRIBUTION OF COPIES	
1	WHITE	REMAIN WITH SAMPLES
2	YELLOW	OFF-SITE LAB
3	PINK	FERMCO DATA REVIEW AND REPORTING
4	BLUE	ORIGINATOR

*IF SEALS ARE BROKEN, CONTACT THE FERMCO CONTACT LISTED ABOVE IMMEDIATELY.

2194

Fernald Environmental Restoration Management Corporation

RSO - ANALYTICAL LABORATORY SERVICES

OFF-SITE LABORATORY CUSTODY TRANSFER AND ANALYSIS REQUEST RECORD (OCTR)

REFERENCE DOCUMENT NO:

SAR/CR: SPL-95-1376

PURCHASE ORDER NO.: 95-H053	OFF-SITE LAB CONTACT: KEITH NICHOLSON	REPORT TO: FERMCO, P.O. BOX 398704, CINCINNATI, OH 45239-8704
RELEASE NO.: 1000006737	FERMCO CONTACT/PHONE: RICH DAIN (513) 738-9157	
SAMPLE SHIPMENT DATE: 5-17-95	REQUIRED REPORT DATE: PER CONTRACT (NORMAL)	RECEIVING LAB NAME: DATACHEM
SAMPLE SHIPPER: M. CORNELL	SAMPLE TEAM: EFF. MON. & CNTL	RECEIVING LAB ADDRESS: 960 W. LEVOY DR. SALT LAKE CITY, UT. 84123

	SAMPLE NUMBER	SAMPLE DESCRIPTION/TYPE/CODE	DATE/TIME COLLECTED	CONTAINER TYPE	SAMPLE VOLUME	PRESERVATION	ANALYSIS REQUESTED	CONDITION UPON RECEIPT*
1	200153669 FLD BLK	D.I. WATER	5/11/95 1030	PLASTIC	1 x 1L	NONE	*EO 3880	EO 3884
2								
3								
4								
5								
6								
7								
8								
9								
10								
11								

CAN SEAL NO: 2970

LAST ENTRY MMC 5-17-95

SPECIAL INSTRUCTIONS: TOTAL U ANALYSES ARE TO BE PERFORMED BY LASER PHOSPHORMETRY & EITHER COLORMITY OR FLOUOMETRY (AS LISTED IN METHOD 114)

*= TOTAL U; GROSS A/B; PARTICULATES; GAMMA SCAN

SAMPLE PLAN NUMBER:	PROJECT NAME:	CHARGE NUMBER:
N/A	PERIODIC CONFIRMATORY MSMTS.	7 ECB 2

CAN NO.:	SEAL NO.:	CAN NO.:	SEAL NO.:	CAN NO.:	SEAL NO.:	CAN NO.:	SEAL NO.:	CAN NO.:	SEAL NO.:	CAN NO.:	SEAL NO.:
				CAN COOLER SEALED W/C-O-C TAPE MMC 5-17-95							

RELINQUISHED			RECEIVED		
RELINQUISHED BY	DATE	TIME	DATE	TIME	RECEIVED BY
1. Mark Cornell	5-17-95	1300	1. 5-18-95	1000	Stephanie Smith
2. Stephanie Smith	5-18-95	1030	2. 5-18-95	1035	Amelia Lis McKewee
3.			3.		

NO.	DISTRIBUTION OF COPIES	
1	WHITE	REMAIN WITH SAMPLES
2	YELLOW	OFF-SITE LAB
3	PINK	FERMCO DATA REVIEW AND REPORTING
4	BLUE	ORIGINATOR

000143

*IF SEALS ARE BROKEN, CONTACT THE FERMCO CONTACT LISTED ABOVE IMMEDIATELY.

2194

BEST
AVAILABLE
COPY

7194

HAYDEN

DEN
NTAL GROUP, INC.

Post-it® Fax Note 7671	Date 11-21-94 # of pages ▶ 8
To Customer Service	From D. Robinson
Co./Dept.	Co.
Phone #	Phone #
Fax # 801-268-9992	Fax #

November 21, 1994

Customer Service
DataChem Laboratories
960 West Levoy Drive
Salt Lake City, UT 84123

Subject: Laboratory Services / Subcontracting
FERMCO RFP # PES-80706

Dear Sir or Madam:

We are submitting a proposal in response to the above request and would like to receive a quotation from your firm for laboratory services. Your firm's name was given to us by FERMCO as a qualified subcontract laboratory.

We request a firm, fixed cost proposal to provide analytical support for the scope of work included with this letter. To summarize the analytical scope of work:

1. Provide analysis by USEPA Method 5 (40CFR Part 61) for three field samples from Source EP8-013 and one field sample from EP11-002. Filter, probe rinse (Acetone), and backhalf (H_2O) samples will be included as well as quality control samples (see below). Samples are to be analyzed for total particulate.

2. Following particulate analysis, the fractions for each field sample shall be composited and analyzed to total activity and uranium per EPA Method 114, and according to, the protocol shown in Table 2 of the scope of work.

3. Proposed cost shall include cost to analyze and report results for all field samples and quality control samples. Quality control samples to be included in the sample sets:

   - Performance evaluation sample, to be supplied by FERMCO, and analyzed for total Uranium in the same manner as the composites (Item 6, scope of work).

   - Two field blank acetone rinse samples, two field blank filters, two laboratory filter blanks (supplied by Hayden), laboratory matrix spike/spike duplicate, and two container blanks.

000144

F010331.94

TALLY SHEET

- 7194

RELEASE #: 1000006737 (Can 1 of 1)
PO #: 95-H053 (DCL-SLC)
DATE SHIPPED: 17-May-95
MATERIAL: Periodic Confirmatory Measurements – Filters, Acetone, Water

ANALYSIS: Total U; Gross A/B; Particulates; Gamma Scan

Composite Sample Number	Lot Number	Sample Container Size	AnaLis/ FACTS Number	Gross Weight lbs.	Tare Weight lbs.	Net Weight lbs.
REAG. BLK.	W050-725-P047-6737	PETRI DISH	200153657	0.106	0.088	0.018
REAG. BLK.	W050-725-P047-6737	1L PLST	200153662	0.511	0.141	0.370
REAG. BLK.	W050-725-P047-6737	1L PLST	200153666	0.943	0.141	0.802
EO-1	W050-725-P047-6737	PETRI DISH	200153658	0.106	0.088	0.018
EO-1	W050-725-P047-6737	1L PLST	200153663	0.423	0.141	0.282
EO-1	W050-725-P047-6737	1L PLST	200153667	1.128	0.141	0.987
LO-1	W050-725-P047-6737	PETRI DISH	200153659	0.101	0.088	0.013
LO-1	W050-725-P047-6737	1L PLST	200153664	0.542	0.141	0.401
LO-1	W050-725-P047-6737	1L PLST	200153668	0.934	0.141	0.793
FLD. BLK.	W050-725-P047-6737	PETRI DISH	200153660	0.106	0.088	0.018
FLD. BLK.	W050-725-P047-6737	1L PLST	200153665	0.476	0.141	0.335
FLD. BLK.	W050-725-P047-6737	1L PLST	200153669	1.163	0.141	1.022
				6.537	1.480	5.057

- 7194

FEMP	RADIOLOGICAL SURVEY REPORT COVER SHEET		SURVEY NUMBER: 95-05-G1-194	
DATE: 5-17-95	LOCATION: Lab	RCT: [redacted]	BADGE: 10148	PAGE: 1 OF 4
TIME: 0700	LEVEL: 580'			
WORK PERMIT NUMBER: N/A			BADGE:	
RWP NUMBER:		SIGNATURE:	DATE:	

ATTACHMENTS:		
3	Pg 2 MURF	
	Pg 3 & 4 Tennelco Printout	

REASON FOR SURVEY	
	Sample surveyed for release to go offsite. Gross area smears taken. Direct frisk inside drum
	Release # ~~6667~~ 6737 N/A

SUMMARY:

N/A

000146

No.	Distribution of Copies
1	Radiological Records
2	Files

Supervisor Notified	Time	Date	Notified by:

SURVEY 95-05-G11-144

DATE:	LOCATION:	RCT:	BADGE #:
5-17-95	Lab	[redacted]	10148/721

MODEL	SERIAL NUMBER	TYPE ALPHA or BETA/GAMMA	DATE	[redacted]	CT	(DPM)	PRE/PERFORMANCE TEST YES	NO
LB5100	7	α, β, γ	6-95	.2 / 1.72	.289 / 4.18	18.2 / 19.8	X	
M-3	77101	β, γ	10-95	60	30	3K	X	
			N					
				A				

TIME	RCT INIT	MATERIAL DESCRIPTION	RELEASE CRITERIA SURF or VOL	RESULTS ALPHA REMOVABLE	ALPHA FIXED + REM	BETA/GAMMA REMOVABLE	BETA/GAMMA FIXED + REM	RELEASE JUSTIFICATION	RECIPIENT	MATERIAL RELEASE EVALUATOR BADGE # and SIGNATURE (1)
0700	bo/DP	200153667	SURF	-0 *	N/A	0 *	<MDCP		Doug Stack	
		200153668		2 *		4 *	<MDCP			
		200153669		2 *		4 *	<MDCP			
		200153666		-0 *		4 *	<MDCP			
		200153662		-0 *		0 *	<MDCP			
		200153665		-0 *		-1 *	<MDCP			
		200153664		2 *		-1 *	<MDCP			
		200153663		2 *		8 *	<MDCP			
		200153658 (AF)		-0 *		0 *	<MDCP	*		N/A
		200153659 (AF)		5 *		-1 *	<MDCP	*		
		200153666 (AF)		-0 *		0 *	<MDCP	*		
		200153657 (AF)		2 *		0 *	<MDCP	*		
		10 gal Can		-0 *		0 *	<MDCP			
					N					
						A				

Comments: Release # 6737 * M:ESH:BCRC: 93 613

(AF) = Air Filter

000147

REVIEW:	INITIAL	DATE

(1) Material Release Evaluator approval required in accordance with RC-DPT-019, (Release of Materials from the Fernald Environmental Management Project), if any of the following conditions exist:

a. Material has areas which are inaccessible for proper survey.
b. Process knowledge is used to support the release decision.
c. Material must be evaluated for the potential of contamination beneath any coating applied while the material was in the Controlled Area.
d. Material must be evaluated for the potential for any volume or in-depth radioactivity within the material matrix.
e. Special case items are being released, such as radioactive consumer products, industrial sources, etc.
f. Material has detectable activity present and the activity is below the contamination limits listed in Attachment A of RC-DPT-019.

2194

WED MAY 17, 1995 08:57:36
GROUP A SYSTEM #7 SMEARS FOR FREE RELEASE (1.1 MIN)

SAMPLE NUMBER	GROSS ALPHA	GROSS B-g	REMOV. dpm_a	REMOV. dpm_B-g	TIME OF COUNT
1	0	2	-0	0	08:58:45
2	1	4	2	4	09:00:06
3	1	4	2	4	09:01:27
4	0	4	-0	4	09:02:48
5	0	2	-0	0	09:04:10
6	0	1	-0	-1	09:05:30
7	1	1	2	-1	09:06:51
8	1	6	2	8	09:08:13
9	0	2	-0	0	09:09:34
10	2	1	5	-1	09:10:55
11	0	2	-0	0	09:12:16
12	1	2	2	0	09:13:37
~~12~~	~~0~~	~~5~~	~~0~~	~~6~~	~~09:14:58~~ hd 5-17-95

OPERATION COMPLETE

FEMP RADIOLOGICAL SURVEY REPORT pg 2 of 4
SURVEY # 9505-G11-194 DATE 5-17-95
(NAME) BY Dunlap/Wilhesse/ BUR L/S Wenell

000147-A

ROUP A SYSTEM #7 SMEARS FOR FREE RELEASE (1.1 MIN)

7194

AMPLE UMBER	GROSS ALPHA	GROSS B-g	REMOV. dpm_a	REMOV. dpm_B-g	TIME OF COUNT
1	0	2	-0	0	10:05:55

PERATION COMPLETE

FEMP RADIOLOGICAL SURVEY REPORT pg 4 of 4

SURVEY # 95-05-G11-194 DATED 5/17/95

	(name)	(signature)
RCT:	[illegible]	[illegible]
REVIEWER:		

Section: ER 26 05/17/19 95

ERG93
GUIDE 26

ACETONE, 3, UN1090, II

POTENTIAL HAZARDS

FIRE OR EXPLOSION

Flammable/combustible material; may be ignited by heat, sparks or flames.
Vapors may travel to a source of ignition and flash back.
Container may explode in heat of fire.
Vapor explosion hazard indoors, outdoors or in sewers.
Runoff to sewer may create fire or explosion hazard.

HEALTH HAZARDS

May be poisonous if inhaled or absorbed through skin.
Vapors may cause dizziness or suffocation.
Contact may irritate or burn skin and eyes.
Fire may produce irritating or poisonous gases.
Runoff from fire control or dilution water may cause pollution.

EMERGENCY ACTION

Keep unnecessary people away; isolate hazard area and deny entry.
Stay upwind; keep out of low areas.
Positive pressure self-contained breathing apparatus (SCBA) and structural firefighters' protective clothing will provide limited protection.
Isolate for 1/2 mile in all directions if tank, rail car or tank truck is involved in fire.
CALL Emergency Response Telephone Number on Shipping Paper first. If Shipping Paper not available or no answer, CALL CHEMTREC AT 1-800-424-9300.
If water pollution occurs, notify the appropriate authorities.

FIRE

Small Fires: Dry chemical, CO_2, water spray or alcohol-resistant foam.
Do not use dry chemical extinguishers to control fires involving nitromethane or nitroethane.
Large Fires: Water spray, fog or alcohol-resistant foam.
Move container from fire area if you can do it without risk.
Apply cooling water to sides of containers that are exposed to flames until well after fire is out. Stay away from ends of tanks.
For massive fire in cargo area, use unmanned hose holder or monitor nozzles; if this is impossible, withdraw from area and let fire burn.
Withdraw immediately in case of rising sound from venting safety device or any discoloration of tank due to fire.

SPILL OR LEAK

Shut off ignition sources; no flares, smoking or flames in hazard area.
Stop leak if you can do it without risk.
Water spray may reduce vapor; but it may not prevent ignition in closed spaces.

Spills: Take up with sand or other noncombustible absorbent
rial and place into containers for later disposal.
Spills: Dike far ahead of liquid spill for later disposal.

AID

victim to fresh air and call emergency medical care; if not
thing, give artificial respiration; if breathing is difficult, give
en.
se of contact with material, immediately flush eyes with running
r for at least 15 minutes. Wash skin with soap and water.
e and isolate contaminated clothing and shoes at the site.

SURVEY RECORD

Page 1 of 1

Date: 5-18-95 Survey Type: Meter: ✓ Smear: ✓ Leak Test: Approved: RSO Date:

By: MM

Survey Instrument:

Manufacturer: LUDLUM
Model Number 19
Serial Number: ~~159~~ 102872
Calib. Date: 9-30-94

FERMCO ~~MX-0199~~ IH. mm 5-18-95

BACKGROUND <0.011 mR/hr

Scintillation Counter:

Manufacturer: Ludlum
Model Number: 2929
Lab Instrument No.: 108227

Sample Count Time - 1 min.

	ALPHA	BETA
BLANK (CPM)	0.08	65.03
COUNTER EFFICIENCY (%)	0.3517	0.4083

Mixed Waste Lab Survey Location or Sealed Source Number	Instrument Reading	Disc Smears/Leak Test Swipes						Remarks
		Alpha			Beta			
		CPM	DPM	pCi	CPM	DPM	pCi	
M095 0341 OUTSIDE	<0.012 mR/hr	0			68			<0.011 mR/hr @ 1 METER
INSIDE	<0.012	0			63			
SAMPLES	<0.012	0			71			

0001151

0001194

7194

DATACHEM LABORATORIES COOLER RECEIPT CHECKLIST

1. Client Name: FERMCO
2. Project/Task/Site: REL. #: 6737
3. Time/Date of Receipt: 1000 5-18-95
4. # Coolers Received: 1
5. Custody Seals?: (Circle) Present/Absent* Intact/Broken*
   Tamper Evident: Yes/No
6. Condition of Coolers: Acceptable/Unacceptable
7. Comments on Cooler Condition (#6): 1 DRUM
8. Ice Present: Yes/No* Frozen/Melted
   Comments: RAD CHEM ONLY
9. Temp Control: Present/Not Included
10. Location Temp Taken: Control/Between Samples
11. Taken by: (Signature) [signature] 5-18-95
    MARK MENDENHALL (Printed Name)
    5-18-95 1130 (Date/Time)
12. Are all temperatures within project specific guidelines? Yes/No*

*CONTACT PROJECT MANAGER. COMPLETE INCIDENT REPORT.

Cooler Received	DCL Cooler #	Temp	Cooler Received	DCL Cooler #	Temp	Cooler Received	DCL Cooler #	Temp
1	MC95 0341	20 °C	6	MC95	°C	11	MC95	°C
2	MC95	°C	7	MC95	°C	12	MC95	°C
3	MC95	°C	8	MC95	°C	13	MC95	°C
4	MC95	°C	9	MC95	°C	14	MC95	°C
5	MC95	°C	10	MC95	°C	15	MC95	°C

SAMPLE RECEIVING INCIDENT REPORT

Client Sample #'s Affected: _____ DCL Set I.D: _____

DCL Sample #'s Affected: _____

- ☐ Cooler Temps out of Range
- ☐ Missing Cooler
- ☐ Broken/Leaking Samples
- ☐ Missing Samples/Bottles
- ☐ Missing Paperwork
- ☐ Incorrect Preservation
- ☐ Low Sample Volume
- ☐ Incorrect Bottle Type
- ☐ Missing/Incorrect Bottle Labels
- ☐ Other

BRIEFLY DESCRIBE PROBLEM:

Delivered to: _____ Project Manager

Delivered by: _____ Signature/Date/Time

RESPONSE REQUIRED WITHIN 24 HOURS

PROJECT MANAGER'S COMMENTS:

Returned to Sample Receipt by: _____ (Date/Time/Signature)

Accepted for Sample Receipt by: _____ (Date/Time/Signature)

000152

8/95

Project	FERMCO Emissions Tests
Project Manager	Keith Nicholson
Account Number	3025
Project Duration	1 Month

Date 5/17/95

Mailby Days 20 days

Sample Stream	Project/ Method Type	QC Requirements			Preparation Requirements			Reporting Requirements			LOD/MDL/IDL Requirements		
S95	EPA Clean Air	**Inorganic**			**Inorganic**			Full CLP SOW			CLP SOW		
		Blank			CLP SOW			CLP Forms Only			SW-846 Rev.		
		LCS			SW-846 Rev.			CLP Disk			EPA Clean H2O		
		MS			USAEC 1990			RLIMS	X		USAEC 1990		
		MSD			USAEC 1993			Raw Data			USAEC 1993		
		MD			Microwave			Custom Disk			NIOSH		
		USAEC			Hotplate			ARF			DCL SOP		
		MSA			DCL SOP			QC Forms (specify below)	X		Client specified		
		Tracer			Other			Case Narrative	X		Other	x	Method
		Other			**Radiochemistry**			Calibration data	X		**QC Limits**		
		Radiochemistry			Hotplate leach			Continuing Cal. data			Method	X	
		Blank	X		Muffle furnace			Reporting Basis			Statistical		
		LCS	X		Total dissolution			IRDMIS			Client specified		
		MS	X	U only	Microwave			# of TICs					
		MSD	X	U only	DCL SOP			Counting Error (1 or 2 sigma)					
		Tracer			Other	X	Mthd. 114	TPU					
		Other	X	MD	**Organic**			RPD					
		Organic			CLP SOW			RER					
		Blank			SW-846 Rev.			Send raw data	X				
		LCS			USAEC 1990			Store raw data					
		MS/MSD			USAEC 1993			Other					
		USAEC			Sonication								
		Surrogate			Soxhlet								
		Other			Continuous								
					Separatory funnel								
					DCL SOP								
					Other								

David Robinson

Batch samples with other sets? (●) yes ( ) no

MS/MD/MSD sample identified? ( ) yes (●) no

Specific spiking levels identified? (●) Method ( ) DCL SOP ( ) other (see comments)

Comments: Analyze for U by EPA method 114 A-5, and by laser phosphoremetry - report results separately. Desired detection limits are 50 ug/sample for colorimetric U, and 1 ug/sample for phosphoremetry. Analyze for gamma, alpha, and beta for method 114 G-1, A-4 and B-4. Desired detection limits are 10 pCi for alpha and beta, a 20 pCi/sample as Cs-137 for gamma. Liquid samples and filters are to be analyzed for total particulates prior to other analyses. The client will specify how any compositing of liquid samples is to be conducted.

000453

2194

7194

DATA CHEM

SAMPLE DISPOSAL CONTROL FORM

Chem Laboratories ID Number:_____ Analyst:_____

of Analysis:_____ Analyzed For:_____

DISPOSAL CLASSIFICATION†

le Number	Not Hazardous	Hazardous	Code‡	Explanation
	[ ]	[ ]		
	[ ]	[ ]		
	[ ]	[ ]		
	[ ]	[ ]		
	[ ]	[ ]		
	[ ]	[ ]		
	[ ]	[ ]		
	[ ]	[ ]		

nple (either solid or liquid) is to be classified as rdous waste upon disposal if it exhibits any of ollowing conditions:

e (if classified as hazardous)

If it or its extract contains levels of the contaminants ≥ those specified in Table 1.

If it contains significant levels of organic solvents.

If it is corrosive (pH ≤ 2 or ≥ 12.5).

If it is reactive or explosive.

If it contains ≥ 50ppm PCB.

If it is determined by the chemist or manager that the sample is hazardous, poisonous, or toxic (e.g., some of the pesticide formulations). If this code is used, an explanation must be provided.

TABLE 1 TCLP levels.

EPA HW No.	Contaminant	Limit (mg/l)
D004	Arsenic	5.000
D005	Barium	100.0
D018	Benzene	0.5
D006	Cadmium	1.0
D019	Carbon Tetrachloride	0.5
D020	Chlordane	0.03
D021	Chlorobenzene	100.0
D022	Chloroform	6.0
D007	Chromium	5.0
D023	o-Cresol	200.0*
D024	m-Cresol	200.0*
D025	p-Cresol	200.0*
D026	Cresol	200.0*
D016	2,4-D	10.0
D027	1,4-Dichlorobenzene	7.5
D028	1,2-Dichloroethane	0.5
D029	1,1-Dichloroethylene	0.7
D030	2,4-Dinitrotoluene	0.13
D012	Endrin	0.02
D031	Heptachlor	0.008
D032	Hexachlorobenzene	0.13
D033	Hexachlorobutadiene	0.5
D034	Hexachloroethane	3.0
D008	Lead	5.0
D013	Lindane	0.4
D009	Mercury	0.2
D014	Methoxychlor	10.0
D035	Methyl Ethyl Ketone	200.0
D036	Nitrobenzene	2.0
D037	Pentachlorophenol	100.0
D038	Pyridine	5.0
D010	Selenium	1.0
D011	Silver	5.0
D039	Tetrachloroethylene	0.7
D015	Toxaphene	0.5
D040	Trichloroethylene	0.5
D041	2,4,5-Trichlorophenol	400.0
D042	2,4,6-Trichlorophenol	2.0
D017	2,4,5-TP Silvex	1.0
D043	Vinyl Chloride	0.2

* If the concentrations for o-, m-, and p-cresol can not be differentiated, the total cresol concentration is used.

The constituents in bold are the original EP toxicity constituents.

000154

DataChem Laboratories

PROJECT RESOURCE UTILIZATION SUMMARY

Date: _____

DCL Reference #: _____

Company/Agency Name: _____

Analytes/Method: _____

LABOR

Date	Personnel	Total Hours

SUPPLIES

Item	Quantity

EQUIPMENT USAGE

Major Instrumentation	Total Hours

DataChem Laboratories/ 960 West LeVoy Drive / Salt Lake City, Utah 84123

B-7194

DATA CHEM LABORATORIES
A SORENSON COMPANY

Analytical Documentation
Inventory Checklist

- [NA] Copy of TCLP Preparation Logbook Pages
- [X] Copy of Sample Preparation Notebook/Logbook Pages
- [X] Copy of Analyst's Notebook/Method Logbook Pages
- [X] Copy of Instrument Injection Logbook/Instrument Logbook/Run Log Pages
- [NA] Percent Solids/Percent Moisture Results
- [NA] Copy of Reagent Logbook Pages
- [NA] Copy of Working Standard Preparation Logbook Pages
- [X] Copy of Secondary or Intermediate Standard Preparation Logbook Pages
- [X] Copy of Primary Standard or Concentrated Stock Standard Preparation Logbook Pages
- [X] Certificates of Analysis for Standards
- [NA] Copy of Standard Verification Logbook Pages (including documentation for spiking solutions and calibration standards)
- [NA] Copy of Preparation Logbooks for solutions prepared by QC

All other miscellaneous documentation associated with this set (describe)

- [NA] _____

Analytical Documentation
Reviewer Checklist

- [X] The Analytical Documentation Inventory Checklist above is complete.
- [X] Basic documentation procedures were followed in accordance with DCL SOP XX-DC-004 "Analytical Data Record Keeping."
- [X] All notebook and logbook pages contain page number, book number, title, and available space for pagination (if required).
- [X] All notebook and logbook pages were signed and dated by the analyst and reviewer before copying.
- [X] All copies are legible.
- [X] Standard preparation is documented in accordance with DCL SOP XX-DC-019 "Standards Purity, Preparation, Traceability and Verification" or by WR-DC-001 "The Acquisition, Preparation, and use of Radioactive Standard Reference Materials."
- [X] Documentation is provided to verify that standard calibration solutions and spiking solutions are traceable to a vendor certificate.

000156

Assembled by: Robin Tully (Signature) 6/14/95 (Date) Reviewed by: Christy Webster (Signature) 6-15-95 (Date)

E Sample Preparation

Project No. 31
Book No. 2616

7194 31

Page No.

nt	Acct. No.	Set No.	Matrix	Requested Anal.	Balance ID	Furnace ID
en Enviro. Group	3025	595-0498	Filter/Liquid	Tot. U, Gross α, β, γ	102695	RCL-FN-1

The glass fiber - air filters (EO 3868, 71, 74, 77) were placed in 250 mL ex griffin beakers and placed in a muffle furnace at 525°C for ≈ 72 hrs. ter the samples had cooled to room temperature the samples were transferred teflon beakers with conc. HNO_3. HF acid was then added to the akers and they were placed on the hotplate until dissolution had taken ace and the sample was near dryness. The samples were then wet ed twice with conc. HNO_3 to expel off the HF. The samples were n brought up to ≈ 5-10 mL with conc. HNO_3.

The liquid samples, which were delivered to us after the Total Solids Analysis, e dissolved in HNO_3 and transferred into the Filters accordingly:

EO 3881 (REAG. BLK)	EO 3882 (EO-1)	EO 3883 (LO-1)	EO 3884 (FLD BLK)
EO 3868 (F)	EO 3871 (F)	EO 3874 (F)	EO 3877 (F)
EO 3869 (Liq.)	EO 3872 (Liq.)	EO 3875 (Liq)	EO 3879 (Liq.)
EO 3870 (Liq.)	EO 3873 (Liq.)	EO 3876 (Liq.)	EO 3880 (Liq.)

The combined F/LIQ samples (EO 3881, 82, 83, 84) were then placed on a tplate and were reduced to ≈ 2-3 mL. The samples were then transferred to 4 oz PMP containers and diluted to the indicated amounts with 4 M HNO_3.

SAMPLE ID	Dilution
EO 3881	50.032 g.
EO 3882	50.025 g.
EO 3883	50.025 g.
EO 3884	50.043 g.

The Following are the amounts of sample that were remaining following the DCHEM analysis.

SAMPLE ID	Dilution Amount Remaining.
EO 3881	34.086 g.
EO 3882	33.917 g.
EO 3883	22.325 g.
EO 3884	33.997 g.

To Page No.

essed & Understood by me, | Date 6/9/95 | Invented by | Date 6/2/95

Recorded by Dave Leddick

000157

Book No. 4046 Page No. 121

Gross Alpha/Beta Proportional Counting Log

Client #1 : NA Acct No.: 3025 Set No.: S95-0498-DE

Client #2 : NA Acct No.: 3107 Set No.: Rx-0047-BE

Client #3 : NA Acct No.: NA Set No.: NA

Prep. Group ID: 6955802X Date Prepared: 6/12/95 Matrix: water

Instrument: HT-1000 Date Analysis Started: 6/12/95 Pipet Used: 100µl Balance Used: R200D B310P, MC-1LC4200

LCS No.: QC-57147-1 MD No.: MXS-03847MSD Blank No.: BL-57147-1

Activity (pCi) = Conc (pCi/ml or g) x (Volume (ml) or Mass(g))

Decay Corrected Activity = Original Activity ($e^{-(0.693/T_{1/2})(\Delta T)}$)

Alpha Standard Solution			
Source ID	Concentration (pCi/mL or g)	Aliquot Added (mL or g)	Decay Corrected Activity (pCi)
Pu-239 ISL 2/15	649 pCi/g	0.106	68.794

Beta Standard Solution			
Source ID	Concentration (pCi/mL or g)	Aliquot Added (mL or g)	Decay Corrected Activtiy (pCi)
Sr-90 TSL 2/35	250.493 Sr-90 on 11 Feb 94	0.104	242.516 pCi/g Sr-90 on 06/12/95

Self Absorption Correction Factor = a + b • log(c + x)

Sr/y-90 act: 50.443 pCi

Self Absorption Curve → Date: 2/7/95 Notebook: NA Page: NA α Coefficients → a: 0.9470 b: -0.2795 c: 0.6265

Self Absorption Curve → Date: 2/7/95 Notebook: NA Page: NA ß Coefficients → a: 0.9505 b: -0.0426 c: 0.0725

Sample						
Carrier	ID	Planchet	S.A.(mg)	Vol(mL)	Mass(g)	Filename
A2	BL-57147-1	F686	1.19	350.0	NA	RL0612A
A3	QC-57147-1	F687	1.30	350.0		RL0612A
A2	EO 3881	F688	82.17	10.0		RL0613A1
A3	3882	F689	74.16	↓		↓
A4	3883	F690	96.33	↓		RL0613A1
B2	3884	F691	105.17	10.0		RL0613B1
A4	MXS-03841	F692	44.28	350.0		RL0612A
B2	3842	F693	41.83	↓		RL0612B
B3	3843	F694	2.08	↓		↓
B4	3844	F695	1.80	350.0		RL0612B
C1	3845	F696	58.92	300.0		RL0612C
C2	3846	F697	37.91	350.0		↓
C3	3847	F698	28.29	300.0		RL0612C
A2	3847MS	F699	28.28	300.0		RL0613A
A3	3847MSD	F700	27.42	300.0		
A4	3848	F701	31.66	350.0		RL0613A
B2	3849	F702	35.17	350.0	↓	RL0613B
B3	3850	F703	68.80	250.0	NA	RL0613B

Robert Fully 6/13/95

Comments: Act. MS/MSD

	Pu-239 (g)	Added (Act)	Sr-90 (mg)	Act Added
MS	0.107	69.44 pCi	0.107	51.898
MSD	0.1067	69.44 pCi	0.104	50.443 pCi

*N/A=Not Applicable

Sample Numbers	Planchet Number	Tare wt(g)	TOTAL wt(g)	Sample wt(mg)	Count time(m)
BL-57147-1	F686	7.55778	7.55897	1.19	240
QC-57147-1	F687	7.47909	7.48039	1.30	240
E03881	F688	7.58649	7.66866	82.17	1000
3882	F689	7.54566	7.61982	74.16	↓
3883	F690	7.50894	7.60527	96.33	↓
3884	F691	7.57682	7.68199	105.17	1000
MXS-03841	F692	7.53608	7.58036	44.28	240
-03842	F693	7.46602	7.50785	41.83	↓
-03843	F694	7.51699	7.51907	2.08	↓
-03844	F695	7.54597	7.54777	1.80	↓
-03845	F696	7.52654	7.58506	58.52	↓
-03846	F697	7.53564	7.57355	37.91	↓
-03847	F698	7.50627	7.53456	28.29	↓
-03847MS	F699	7.55683	7.58511	28.28	↓
-03847MSD	F700	7.51630	7.54372	27.42	↓
-03848	F701	7.43377	7.46543	31.66	↓
-03849	F702	7.52102	7.55619	35.17	↓
-03850	F703	7.57964	7.64844	68.80	240

Samples E03881 → E03884 were hygroscopic and were flamed. Samples "mushroomed" upon flaming. Mashed residue into smaller particles and fixed using 0.1 M HNO_3. - All samples were wet ashed using 2x10ml HNO_3 (conc) before transferring to planchets with 0.1 M HNO_3.

R. Lully 6/13/95 — Activity corrections have been made on the QC samples to reflect Activity/Sample.

Recorded by: Robin Lully Date: 6/13/95 Reviewed by: Ray Yeum Date: 6/13/95

Activity Corrections have also been made to reflect dilutions on samples E03881 → 3884. For dilution information - See notebook DCL # 2616 pg. 31. Dilution was $\frac{1\ FT}{50mL\ sam.} \times \frac{10mL\ Aliq.}{Samp.} = 1\ FT/5\ sam.$ R. Lully 6/13/95

See calculation sheets.

000159

- 7194

RUN LOG

Instrument: HT-1000-1

000160

6/9/95	A1-A4	RLK	CKS0609A	CKS-1A ; 2A ; 3A ; 4A
↓	B1-B4	↓	CKS0609B	↓
	C1-C4		CKS0609C	
6/9/95	D1-D4	RLK	CKS0609D	CKS-1A ; 2A ; 3A ; 4A
6/9/95	B1-B4	RLK	RK0609B	BLANK ; LCS ; ST0526 ; EN-1729
↓	C1-C4	RLK	RK0609C	EO-2978 A, B ; C ; D
6/9/95	D1-D4	RLK	RK0609D	EO-0568 A ; B ; C ; D
6/12/95	A1-A4	RL	CKS-0612A	CKS-001A → CKS-004A
↓	B1-B4	↓	CKS0612B	void RL 6/12/95 ~~BL-57147-1, QC-57147-1, MXS-03841~~
	C1-C4		CKS0612C	RL 6/12/95 MK ↓
	D1-D4		CKS0612D	CKS-001A → CKS-004A
	A2-A4		RL0612A	BL-57147-1, QC-57147-1, MXS-03841
↓	B2-B4	↓	RL0612B	MXS-03842 → 03844
6/12/95	C1-C3	RL	RL0612C	MXS-03845 → 03847
6/13/95	A1-A4	RL	CKS0613A	CKS-001A → CKS-004A
↓	B1-B4	↓	CKS0613B	↓
	C1-C4		CKS0613C	CKS-001A → CKS-004A
↓	A2-A4	↓	RL0613A	MXS-03847MS, 3847MSD, 3848
6/13/95	B2-B3	RL	RL0613B	MXS-03849, 03850
6/13/95	A2-A4	RL	RL0613A1	EO 3881 → 3883
6/13/95	B2	RL	RL0613B1	EO 3884

Book No. 2 Page 55

RADIOCHEMISTRY LABORATORY
RADIOACTIVE MATERIAL INVENTORY
INTERMEDIATE STANDARD LOG

ermediate Standard ID: ISL 2/5 Standard Source ID: 2510-1

Reference Date/Time*: 347/1990/0500 MST RMI Source Log Ref. Book/Page: 2/8

*Use Julian date and military time

DCL Balance ID No.: 102683 for act.
102695 for tot. wt.

te	Inits.	Solvent	Activity (pCi)†	Final Weight	Conc. (pCi/g)†	Witness
5/94	[illegible]	2M HNO3	66094.4	101.834	649.04	[illegible]

RL 5/2/9:

Pu-239

e:

Date	Inits.	Aliquot	Activity (pCi)†	Balance (pCi)†	Destination
4/9/95	RL	0.320	207.693	42845.901	QC, MS, MSD 6953801D
4/18/95	RL	0.320	207.693	42638.208	QC, MS, MSD 6953K01S
4/24/95	OR	0.1	64.904	42573.304	Training Gross α/β QC
4/24/95	RL	0.321	208.342	42364.962	QC, MS, MSD 6953R010
4/24/95	RL	0.319	207.044	42157.918	QC, MS, MSD 6953R00G
5/5/95	RL	0.106	68.798	42089.120	QC-69544006 OR RL 5/15/95
5/17/95	RL	0.106	68.798	42020.322	QC - EPA AUDIT 69545006
5/30/95	RL	0.105	68.798	41951.524	QC - DOE AUDIT 69544031
5/30/95	RL	0.105	68.149	41883.375	QC - DOE AUDIT 69544031
5/31/95	RL	1.754	1138.416	40744.959	QC - DOE AUDIT 595-0170
5/31/95	RL	0.240	155.76	40589.199	QC - DOE AUDIT 595-0170
6/9/95	RL	0.320	207.693	40381.506	QC, MS, MSD 6955802X

activities are referenced to the source date/time. Decay corrections are to be made on the following page.

To Page:

Book No. 2 Page 8

RADIOCHEMISTRY LABORATORY
RADIOACTIVE MATERIAL INVENTORY
STANDARD SOURCE LOG

Vendor: U.S. EPA Vendor Source ID: 2510-1

Date Received: _____ Received By: _____

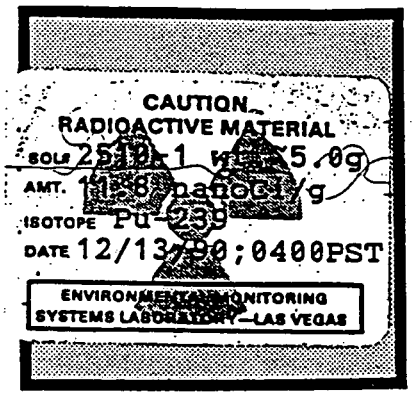

Place Source Label Above

Source Reference Date/Time*: 347/1990/0500MST Solvent: 4M HNO_3

ISOTOPE(S)	CONC. (pCi/g)	ISOTOPE(S)	CONC. (pCi/g)
PU-239	3/15/94 118,800 ~~118,000~~		

*Use Julian date and military time

Usage:

DCL Balance ID No.: 102683 for wt of activity ~~102695 for total weight~~

Date	Inits.	Aliquot	Activity (pCi)	Balance (pCi)	Destination	Witness
3/15/94	ich	5.5991	66069.4	Ø	ISL-2/15	[illegible]

B-7194

Res-4-2-92

U.S. Environmental Protection Agency
Environmental Monitoring Systems Laboratory-Las Vegas
Nuclear Radiation Assessment Division

Calibration Certificate

Description

Principal radionuclide: PLUTONIUM-239 Half-life: 2.4×10^4 years

Nominal activity: 59 nano curies

Nominal volume: 5 ml in ampoule/bottle number: 2510-1

Measurement

Activity of principal radionuclide

Activity per gram of this solution

11.8 nano curies of Plutonium-239

at 0400 hours PST on December 13, 1990

Activity of daughter radionuclide

The principal activity was accompanied at the quoted time by

[ ] [ ] curies Per gram

of the daughter nuclide [ ]

Total mass of this solution

APPROX. 5.0 grams

Method of measurement

The activity of the primary solution was measured by an internal gas flow proportional counter.

The activity of the dilution was measured by liquid scintillation counting.

Useful Life

This radionuclide has decayed through [ ] half lives since it was obtained by EMSL-LV

We recommend that this solution should not be used after [ ]

Purity

The manufacturer states that activities other than that of the principal nuclide and of its daughter nuclides, if any, were estimated/known to be:

(1) see remarks	less than equal to	%	of the principal activity
(2)	less than equal to	%	of the principal activity
(3)	less than equal to	%	of the principal activity

The activity of impurity (1) is not (2) is not (3) is not included in the quoted figures of the principal activity.

Random Errors

The precision of this standard was such that the certified value of the radioactive concentration of the principal activity had a standard error (sm) not greater than ± 0.13 %
(The 99.7% confidence limits are given by t(sm) where t is obtained from the student t factor for the degree of freedom (n-1)).

The maximum uncertainty due to the assessable systematic errors (dilution, counting, and known uncertainty of the standard) is obtained by the separate arithmetic summation of the positive and negative systematic error ($+\delta - \delta'$). These have been estimated not to exceed

+ 2.7 % or - 2.7 %

the overall uncertainty (often called accuracy) is an estimate of the possible divergence of the quoted result from the true value. It is a combination of random error [t(sm)] at the 99.7% confidence limits and the worst case estimate of the systematic errors ($+\delta, -\delta'$)
The overall uncertainty is therefore calculated on the basis of + [t(sm) $+\delta$], - [t(sm) $+\delta$]
and is + 3.1 %, - 3.1 % of the quoted radioactive concentration.

Decay Schemes

This standardization is based on the following assumptions of the principle nuclide, its daughter nuclides and impurities (no allowance for error in these assumptions or the assumption of quoted half-life have been included in the statement of accuracy above).

Plutonium-239 and impurities were assumed to decay 100 percent by alpha emission.

Chemical Composition of Solution

Carrier content per gram of solution:

Other components:

4M Nitric acid

Preservative:

Remarks

IMPURITIES:

Pu-238	0.033%	of the total activity
Pu-240	4.6×10^{-5}%	of the total activity
Pu-241	1.5×10^{-3}%	of the total activity
Pu-242	8.8×10^{-6}%	of the total activity
Pu-244	6.2×10^{-9}%	of the total activity

000165

Date Certificate Prepared December 13, 1990

Approval Signature Paul B. Hahn

Revised 1/84

Book No. 2 Page 61

RADIOCHEMISTRY LABORATORY
RADIOACTIVE MATERIAL INVENTORY
INTERMEDIATE STANDARD LOG

Intermediate Standard ID: ISL - 2/35 Standard Source ID: 2454-4

Reference Date/Time*: 42/1994/0500 RMI Source Log Ref. Book/Page: 2/12

*Use Julian date and military time

DCL Balance ID No.: 102695

Sr-90

Date	Inits.	Solvent	Activity (pCi)†	Final Weight	Conc. (pCi/g)†	Witness
10/4/95	CMW	2N HNO3	25059.840	100.042g	250.493	

Usage:

	Date	Inits.	Aliquot	Activity (pCi)†	Balance (pCi)†	Destination
1.	6/9/95	RL	0.315	78.905	2326.662	QC, MS, MSD 6955802X
2.						
3.						
4.						
5.						
6.						
7.						
8.						
9.						
10.						
11.						
12.						
13.						
14.						
15.						
16.						
17.						
18.						

† All activities are referenced to the source date/time. Decay corrections are to be made on the following page.

To Page:

Book No. 02 Page 12

- 7194

RADIOCHEMISTRY LABORATORY
RADIOACTIVE MATERIAL INVENTORY
STANDARD SOURCE LOG

Vendor: EPA Vendor Source ID: 7454-4

Date Received: 10-3-94 Received By: CCW

CAUTION
RADIOACTIVE MATERIAL
SOL# 2454-4 WT. 5.0g
AMT. 5020 nanocuries/g
ISOTOPE Sr-90
DATE 2/11/94 0400PST
ENVIRONMENTAL MONITORING SYSTEMS LABORATORY—LAS VEGAS

Place Source Label Above

Source Reference Date/Time*: 42/1994/05:00 Solvent: 0.1M HCl

ISOTOPE(S)	CONC. (pCi/g)	ISOTOPE(S)	CONC. (pCi/g)
Sr-90	5020		

*Use Julian date and military time

Usage:

DCL Balance ID No.: 102695

Date	Inits.	Aliquot	Activity (pCi)	Balance (pCi)	Destination	Witness
10-4-94	CMW	4.992g	25059.840	Ø	ISL-2/35	PJK

000167

E 7194
Rec. 10-3-94
(Ca)

U.S. Environmental Protection Agency
Environmental Monitoring Systems Laboratory-Las Vegas
Nuclear Radiation Assessment Division

Calibration Certificate

Description

Principal radionuclide: Strontium-90 Half-life: 28.6 years

Nominal activity: 25 nano curies

Nominal volume: 5 ml in ampoule/bottle number: 2454-4

Measurement Activity of principal radionuclide

Activity per gram of this solution

5.02 nano curies of Strontium-90

at 0400 hours PST on February 11, 1994

Activity of daughter radionuclide

The principal activity was accompanied at the quoted time by

5.02 nano curies Per gram

of the daughter nuclide Yttrium-90

Total mass of this solution

Approx. 5.0 grams

Method of measurement

The activity of the primary solution was measured by four pi efficiency tracing.

The activity of the dilution was measured by liquid scintillation counting.

Useful Life

This radionuclide has decayed through 0.3 half lives since it was obtained by EMSL-LV

We recommend that this solution should not be used after December 1999

000168

Purity

The manufacturer states that activities other than that of the principal nuclide and of its daughter nuclides, if any, were estimated/known to be:

(1) others	less than ~~equal to~~	0.01 %	of the principal activity
(2)	less than equal to	%	of the principal activity
(3)	less than equal to	%	of the principal activity

The activity of impurity (1) is not (2) is not (3) is not included in the quoted figures of the principal activity.

Random Errors

The precision of this standard was such that the certified value of the radioactive concentration of the principal activity had a standard error (sm) not greater than ± 0.2 %
(The 99.7% confidence limits are given by t(sm) where t is obtained from the student t factor for the degree of freedom (n-1)).

The maximum uncertainty due to the assessable systematic errors (dilution, counting, and known uncertainty of the standard) is obtained by the separate arithmetic summation of the positive and negative systematic error ($+\delta - \delta'$). These have been estimated not to exceed

+ 2.1 % or - 2.1 %

the overall uncertainty (often called accuracy) is an estimate of the possible divergence of the quoted result from the true value. It is a combination of random error [t(sm)] at the 99.7% confidence limits and the worst case estimate of the systematic errors ($+\delta, -\delta'$)
The overall uncertainty is therefore calculated on the basis of + [t(sm) $+\delta$], - [t(sm) $+\delta$]
and is + 2.5 %, - 2.5 % of the quoted radioactive concentration.

Decay Schemes

This standardization is based on the following assumptions of the principle nuclide, its daughter nuclides and impurities (no allowance for error in these assumptions or the assumption of quoted half-life have been included in the statement of accuracy above).

Strontium-90 decays 100 percent by beta emission to yttrium-90. Yttrium-90 decays also by beta emission.

Chemical Composition of Solution

Carrier content per gram of solution:

100 micrograms strontium

100 micrograms yttrium

Other components:

0.1 M HCl

Preservative:

Remarks

Date Certificate Prepared February 14, 1994

Approval Signature George Wellbeck

000169

Revised 1/84

B-7194

DATA CHEM LABORATORIES
A SORENSON COMPANY

Raw Data
Radiochemistry/Mixed-Waste Department
Proportional Counting
Inventory Checklist

- [x] Section 1. Sample and QC Data
- [x] Section 2. Instrument Performance and Calibration Data

The following signatures verify that the raw data and all inventory and reviewer checklists in each raw data section (all green sheets) are complete and accurate.

000170

Assembled by: Robin Jolly (Signature) 6/14/95 (Date) Reviewed by: Christy Webster (Signature) 6-15-95 (Date)

rev. 3/95

Section 1. Sample and QC Data
Proportional Counting
Inventory Checklist

- [X] Laboratory Control Sample (LCS) Instrument Print-Out
- [X] Blank Instrument Print-Out
- [X] Accuracy Sample (MS) Instrument Print-Out
- [X] Precision Sample (MSD/MD) Instrument Print-Out
- [X] Field Sample Instrument Print-Out
- [NA] Summary Instrument Print-Outs specifying appropriate backgrounds, efficiencies (unless corrected for a particular isotope of interest), and cross-talk values
- [X] Computer/Manual Calculation Sheets summarizing all calculational inputs and results

RL 6/15/95

Section 1. Sample and QC Data
Proportional Counting
Reviewer Checklist

X The Sample and QC Data Inventory Checklist above is complete.

X All appropriate QC for the project was performed.

X All appropriate QC data met acceptance criteria. Unacceptable QC data were documented, and justifications were provided for data used.

X Print-outs are initialed and dated.

DCL_STD.REP

DataChem Laboratories Alpha/Beta Counting Report

Canberra HT-1000 System

Report Date: June 12, 1995 10:21 pm

Data File
RL0612A.SLK

Drawer Program Parameters			
	High Voltage	Amp. Gain	Count Time
Drawer A:	1330	High	14400 sec.

Detector Parameters					
Alpha:		Window	Efficiency	Background	Crosstalk
	Det A/1	65.9-100%	33.30%	0.37599999	7.5802469
	Det A/2	65.4-100%	33.04%	0.044	9.2323008
	Det A/3	69.6-100%	33.45%	0.122	7.116519
	Det A/4	70.3-100%	34.13%	0.086	7.5292134
Beta:		Window	Efficiency	Background	Crosstalk
	Det A/1	0 - 65.8%	44.30%	3.312	0.99590111
	Det A/2	0 - 65.3%	44.49%	1.028	0.99997914
	Det A/3	0 - 69.5%	42.67%	1.1900001	1.0001959
	Det A/4	0 - 70.2%	45.59%	1.682	0.99723953

Det A/1	Sample:	MT	Sample Factor:	1		Jun 12, 1995 18:21:15		
Alpha	Gross:	28	Net:	0.00E+00	±0.094379	pCi:	0.00E+00	±0.1276563
Beta	Gross:	269	Net:	0.00E+00	±0.2802	pCi:	0.00E+00	±0.2849027
Det A/2	Sample:	BL-57147-1	Sample Factor:	1		Jun 12, 1995 18:21:15		
Alpha	Gross:	37	Net:	1.10E-01	±0.0529694	pCi:	1.50E-01	±0.0722076
Beta	Gross:	468	Net:	9.12E-01	±0.1974144	pCi:	9.23E-01	±0.1998666
Det A/3	Sample:	QC-57147-1	Sample Factor:	1		Jun 12, 1995 18:21:15		
Alpha	Gross:	10162	Net:	4.22E+01	±0.8238242	pCi:	5.69E+01	±1.109368
Beta	Gross:	12879	Net:	4.95E+01	±0.9074386	pCi:	5.22E+01	±0.9579056
Det A/4	Sample:	MXS-03841	Sample Factor:	1		Jun 12, 1995 18:21:15		
Alpha	Gross:	47	Net:	1.10E-01	±0.0616068	pCi:	1.45E-01	±0.0813111
Beta	Gross:	691	Net:	1.19E+00	±0.2426894	pCi:	1.17E+00	±0.2397748

R. Tully
6/13/95

000172

DCL_STD.REP

DataChem Laboratories Alpha/Beta Counting Report

Canberra HT-1000 System

port Date: June 13, 1995 01:57 pm

Data File
RL0613A.SLK

Drawer Program Parameters			
	High Voltage	Amp. Gain	Count Time
awer A:	1330	High	14400 sec.

Detector Parameters				
Alpha:	Window	Efficiency	Background	Crosstalk
Det A/1	65.9-100%	33.30%	0.37599999	7.5802469
Det A/2	65.4-100%	33.04%	0.044	9.2323008
Det A/3	69.6-100%	33.45%	0.122	7.116519
Det A/4	70.3-100%	34.13%	0.086	7.5292134
Beta:	Window	Efficiency	Background	Crosstalk
Det A/1	0 - 65.8%	44.30%	3.312	0.99590111
Det A/2	0 - 65.3%	44.49%	1.028	0.99997914
Det A/3	0 - 69.5%	42.67%	1.1900001	1.0001959
Det A/4	0 - 70.2%	45.59%	1.682	0.99723953

t A/1	Sample:	MT	Sample Factor:	1		Jun 13, 1995 09:56:12		
ıha	Gross:	26	Net:	0.00E+00	±0.094379	pCi:	0.00E+00	±0.1276563
ta	Gross:	265	Net:	0.00E+00	±0.2802	pCi:	0.00E+00	±0.2849027
t A/2	Sample:	MXS-03847MS	Sample Factor:	1		Jun 13, 1995 09:56:12		
ıha	Gross:	6435	Net:	2.68E+01	±0.6553753	pCi:	3.65E+01	±0.8934045
a	Gross:	11389	Net:	4.40E+01	±0.855327	pCi:	4.45E+01	±0.8659514
t A/3	Sample:	MXS-03847MSD	Sample Factor:	1		Jun 13, 1995 09:56:12		
ha	Gross:	6145	Net:	2.55E+01	±0.6409171	pCi:	3.43E+01	±0.8630639
a	Gross:	11113	Net:	4.33E+01	±0.8505125	pCi:	4.57E+01	±0.8978137
t A/4	Sample:	MXS-03848	Sample Factor:	1		Jun 13, 1995 09:56:12		
ha	Gross:	57	Net:	1.52E-01	±0.0668007	pCi:	2.01E-01	±0.0881664
a	Gross:	623	Net:	9.02E-01	±0.233059	pCi:	8.91E-01	±0.23026

DCL_STD.REP

DataChem Laboratories Alpha/Beta Counting Report

Canberra HT-1000 System

port Date: June 12, 1995 10:23 pm

Data File
RL0612C.SLK

Drawer Program Parameters			
	High Voltage	Amp. Gain	Count Time
awer C:	1330	High	14400 sec.

Detector Parameters				
Alpha:	Window	Efficiency	Background	Crosstalk
Det C/1	67.1-100%	33.45%	0.112	7.9523106
Det C/2	70.2-100%	33.25%	0.062	9.0144672
Det C/3	76.8-100%	32.90%	0.114	8.3989506
Det C/4	72.9-100%	32.80%	0.178	8.399148
Beta:	Window	Efficiency	Background	Crosstalk
Det C/1	0 - 67.0%	45.02%	1.256	1.0026717
Det C/2	0 - 70.1%	44.81%	1.262	0.99805158
Det C/3	0 - 76.7%	42.73%	1.252	0.99131513
Det C/4	0 - 72.8%	43.56%	1.63	1.0033267

C/1	Sample:	MXS-03845	Sample Factor:	1		Jun 12, 1995 18:21:15		
ha	Gross:	51	Net:	1.00E-01	±0.0652835	pCi:	1.35E-01	±0.0879113
a	Gross:	1007	Net:	2.93E+00	±0.2769665	pCi:	2.93E+00	±0.2771122
C/2	Sample:	MXS-03846	Sample Factor:	1		Jun 12, 1995 18:21:15		
ha	Gross:	33	Net:	7.60E-02	±0.0517424	pCi:	1.03E-01	±0.0700989
a	Gross:	779	Net:	1.98E+00	±0.2481209	pCi:	1.99E+00	±0.2494169
C/3	Sample:	MXS-03847	Sample Factor:	1		Jun 12, 1995 18:21:15		
ha	Gross:	44	Net:	6.90E-02	±0.0617288	pCi:	9.45E-02	±0.084527
a	Gross:	527	Net:	9.38E-01	±0.2114261	pCi:	9.89E-01	±0.2229007
C/4	Sample:	MT	Sample Factor:	1		Jun 12, 1995 18:21:15		
ha	Gross:	24	Net:	0.00E+00	±0.0649369	pCi:	0.00E+00	±0.0891874
a	Gross:	271	Net:	0.00E+00	±0.1965814	pCi:	0.00E+00	±0.203297

R. Gilley
6/13/95

000174

DCL_STD.REP

DataChem Laboratories Alpha/Beta Counting Report

Canberra HT-1000 System

Report Date: June 14, 1995 07:47 am

Data File
RL0613A1.SLK

Drawer Program Parameters	High Voltage	Amp. Gain	Count Time
Drawer A:	1330	High	60000 sec.

Detector Parameters				
Alpha:	**Window**	**Efficiency**	**Background**	**Crosstalk**
Det A/1	65.9-100%	33.30%	0.37599999	7.5802469
Det A/2	65.4-100%	33.04%	0.044	9.2323008
Det A/3	69.6-100%	33.45%	0.122	7.116519
Det A/4	70.3-100%	34.13%	0.086	7.5292134
Beta:	**Window**	**Efficiency**	**Background**	**Crosstalk**
Det A/1	0 - 65.8%	44.30%	3.312	0.99590111
Det A/2	0 - 65.3%	44.49%	1.028	0.99997914
Det A/3	0 - 69.5%	42.67%	1.1900001	1.0001959
Det A/4	0 - 70.2%	45.59%	1.682	0.99723953

Det A/1	**Sample:**	MT	**Sample Factor:**	1		**Jun 13, 1995 15:08:04**		
Alpha	**Gross:**	102	**Net:**	0.00E+00	±0.065828	**pCi:**	0.00E+00	±0.0890385
Beta	**Gross:**	1111	**Net:**	0.00E+00	±0.1954355	**pCi:**	0.00E+00	±0.1987156
Det A/2	**Sample:**	EO 3881	**Sample Factor:**	1		**Jun 13, 1995 15:08:04**		
Alpha	**Gross:**	341	**Net:**	2.97E-01	±0.0405961	**pCi:**	4.05E-01	±0.0553405
Beta	**Gross:**	1982	**Net:**	9.27E-01	±0.1241817	**pCi:**	9.39E-01	±0.1257242
Det A/3	**Sample:**	EO 3882	**Sample Factor:**	1		**Jun 13, 1995 15:08:04**		
Alpha	**Gross:**	376	**Net:**	2.54E-01	±0.0488036	**pCi:**	3.42E-01	±0.0657193
Beta	**Gross:**	1537	**Net:**	3.29E-01	±0.1224343	**pCi:**	3.47E-01	±0.1292435
Det A/4	**Sample:**	EO 3883	**Sample Factor:**	1		**Jun 13, 1995 15:08:04**		
Alpha	**Gross:**	457	**Net:**	3.71E-01	±0.0491565	**pCi:**	4.90E-01	±0.0648788
Beta	**Gross:**	2206	**Net:**	4.96E-01	±0.1459592	**pCi:**	4.90E-01	±0.1442063

R. Fully
6/14/95

000175

DCL_STD.REP

DataChem Laboratories Alpha/Beta Counting Report

Canberra HT-1000 System

port Date: June 14, 1995 07:48 am

Data File
RL0613B1.SLK

Drawer Program Parameters			
	High Voltage	Amp. Gain	Count Time
wer B:	1330	High	60000 sec.

Detector Parameters				
Alpha:	**Window**	**Efficiency**	**Background**	**Crosstalk**
Det B/1	74.3-100%	33.09%	0.148	7.6540756
Det B/2	77.3-100%	33.96%	0.066	7.2033896
Det B/3	78.4-100%	31.44%	0.09	9.5462275
Det B/4	77.8-100%	32.95%	0.11	8.0109806
Beta:	**Window**	**Efficiency**	**Background**	**Crosstalk**
Det B/1	0 - 74.2%	43.91%	1.516	0.99632984
Det B/2	0 - 77.2%	44.30%	0.95200002	0.99805003
Det B/3	0 - 78.3%	42.62%	1.368	1.0187516
Det B/4	0 - 77.7%	42.82%	1.62	1.0118318

B/1	Sample:	MT	Sample Factor:	1		Jun 13, 1995 15:08:13		
ha	Gross:	110	Net:	0.00E+00	±0.0412998	pCi:	0.00E+00	±0.0562227
a	Gross:	1440	Net:	0.00E+00	±0.132218	pCi:	0.00E+00	±0.1356371
B/2	Sample:	EO 3884	Sample Factor:	1		Jun 13, 1995 15:08:13		
ha	Gross:	361	Net:	2.95E-01	±0.0435191	pCi:	3.91E-01	±0.0577234
a	Gross:	1711	Net:	7.38E-01	±0.1175397	pCi:	7.50E-01	±0.1195187
B/3	Sample:	MT	Sample Factor:	1		Jun 13, 1995 15:08:13		
ha	Gross:	110	Net:	2.00E-02	±0.0333776	pCi:	2.87E-02	±0.0478207
a	Gross:	2023	Net:	6.53E-01	±0.135222	pCi:	6.90E-01	±0.1429025
B/4	Sample:	MT	Sample Factor:	1		Jun 13, 1995 15:08:13		
ha	Gross:	154	Net:	4.40E-02	±0.0379046	pCi:	6.02E-02	±0.0518197
a	Gross:	1618	Net:	0.00E+00	±0.1366726	pCi:	0.00E+00	±0.143762

R. Fully
6/14/95

000176

UN-1995 10:08 R300-V1.0

DATACHEM LABORATORIES
GROSS ALPHA / BETA ANALYSES
SDG : NA

? ID..... : G955802X
LE NAME..... : BL-57147-1
LE ID..... : S955802Q

TER ID..... : HT1000
TION NUMBER..... : A2
LE ALPHA COUNT..... : 37.0
LE BETA COUNT..... : 468.0
LE COUNT TIME..... : 240.0 MIN.
LE ALPHA BACK GROUND. : 0.0440
LE BETA BACK GROUND.. : 1.0280
LE BACK GROUND TIME.. : 500.0 MIN.
ME..... : 0.3500 L
LE ALPHA EFF..... : 0.3304
LE BETA EFF ..... : 0.4449
LE ALPHA ATTN..... : 0.8745
LE BETA ATTN..... : 0.9462
A TO BETA X TALK..... : 0.09232
TO ALPHA X TALK..... : 0.01000
EMATIC ERROR..... : 0.1000

RESULTS ALPHA

Activity/sample

A ACTIVITY..... : 4.648E-01 pCi/L x 0.350 L = 0.163 pCi/sam
A TWO SIG COUNT ERROR..... : 2.320E-01 x 0.350 L = 0.0812 pCi/sam
A TPU..... : 2.492E-01 pCi/L x 0.350 L = 0.0872 pCi/sam
A LLD..... : 2.414E-01 pCi/L x 0.350 L = 0.08449 pCi/sam
A MDC..... : 3.309E-01 pCi/L x 0.350 L = 0.1158 pCi/sam

RESULTS BETA

ACTIVITY..... : 2.835E+00 pCi/L x 0.350 L = 0.992 pCi/sam
TWO SIG COUNT ERROR..... : 6.052E-01 x 0.350 L = 0.2118 pCi/sam
TPU..... : 8.216E-01 pCi/L x 0.350 L = 0.2876 pCi/sam
LLD..... : 8.008E-01 pCi/L x 0.350 L = 0.2803 pCi/sam
MDC..... : 9.654E-01 pCi/L x 0.350 L = 0.3379 pCi/sam

Tully
3/95

JN-1995 10:08 R300-V1.0

DATACHEM LABORATORIES
GROSS ALPHA / BETA ANALYSES
SDG : NA

' ID.....	: G955802X
E NAME.....	: QC-57147-1
E ID.....	: S955802R
'ER ID.....	: HT1000
'ION NUMBER.....	: A3
E ALPHA COUNT.....	: 10162.0
E BETA COUNT.....	: 12879.0
E COUNT TIME.....	: 240.0 MIN.
E ALPHA BACK GROUND.	: 0.1220
E BETA BACK GROUND..	: 1.1900
E BACK GROUND TIME..	: 500.0 MIN.
E.....	: 0.3500 L
E ALPHA EFF.....	: 0.3345
E BETA EFF	: 0.4267
E ALPHA ATTN.....	: 0.8674
E BETA ATTN.....	: 0.9447
TO BETA X TALK.....	: 0.07117
TO ALPHA X TALK.....	: 0.01000
MATIC ERROR.....	: 0.1000

RESULTS ALPHA

					Activity/Sample
ACTIVITY.....	: 1.991E+02	pCi/L	x 0.350 L	=	69.69 pCi/sam
TWO SIG COUNT ERROR.....	: 3.767E+00		x 0.350 L	=	1.318 pCi/sam
TPU.....	: 3.920E+01	pCi/L	x 0.350 L	=	13.72 pCi/sam
LLD.....	: 4.003E-01	pCi/L	x 0.350 L	=	0.140 pCi/sam
MDC.....	: 5.154E-01	pCi/L	x 0.350 L	=	0.180 pCi/sam

RESULTS BETA

ACTIVITY.....	: 1.595E+02	pCi/L	x 0.350 L	=	55.83 pCi/sam
TWO SIG COUNT ERROR.....	: 2.905E+00		x 0.350 L	=	1.017 pCi/sam
TPU.....	: 3.140E+01	pCi/L	x 0.350 L	=	10.99 pCi/sam
LLD.....	: 8.998E-01	pCi/L	x 0.350 L	=	0.315 pCi/sam
MDC.....	: 1.082E+00	pCi/L	x 0.350 L	=	0.379 pCi/sam

Jolly
3/95

N-1995 16:15 R300-V1.0

DATACHEM LABORATORIES
GROSS ALPHA / BETA ANALYSES
SDG : NA

ID..... : G955802X
E NAME..... : MXS 03847MS
E ID..... : S954Y05L

ER ID..... : HT1000
ION NUMBER..... : A2
E ALPHA COUNT..... : 6435.0
E BETA COUNT..... : 11389.0
E COUNT TIME..... : 240.0 MIN.
E ALPHA BACK GROUND. : 0.0440
E BETA BACK GROUND.. : 1.0280
E BACK GROUND TIME.. : 500.0 MIN.
E..... : 0.3000 L
E ALPHA EFF..... : 0.3304
E BETA EFF ..... : 0.4449
E ALPHA ATTN..... : 0.5387
E BETA ATTN..... : 0.8887
TO BETA X TALK..... : 0.09232
TO ALPHA X TALK..... : 0.01000
MATIC ERROR..... : 0.1000

RESULTS ALPHA

Activity/sample

ACTIVITY..... :	2.444E+02	pCi/L	x 0.300 L =	73.32 pCi/sam
TWO SIG COUNT ERROR..... :	5.751E+00		x 0.300 L =	1.725 pCi/sam
TPU..... :	4.825E+01	pCi/L	x 0.300 L =	14.48 pCi/sam
LLD..... :	4.572E-01	pCi/L	x 0.300 L =	0.1372 pCi/sam
MDC..... :	6.267E-01	pCi/L	x 0.300 L =	0.1880 pCi/sam

RESULTS BETA

ACTIVITY..... :	1.686E+02	pCi/L	x 0.300 L =	50.58 pCi/sam
TWO SIG COUNT ERROR..... :	3.256E+00		x 0.300 L =	0.9768 pCi/sam
TPU..... :	3.321E+01	pCi/L	x 0.300 L =	9.963 pCi/sam
LLD..... :	9.947E-01	pCi/L	x 0.300 L =	0.2984 pCi/sam
MDC..... :	1.199E+00	pCi/L	x 0.300 L =	0.3597 pCi/sam

Jully
13/95

I-1995 16:15 R300-V1.0

DATACHEM LABORATORIES
GROSS ALPHA / BETA ANALYSES
SDG : NA

ID..... : G955802X
NAME..... : MXS 03847MSD
ID..... : S954Y05M

R ID..... : HT1000
ON NUMBER..... : A3
ALPHA COUNT..... : 6145.0
BETA COUNT..... : 11113.0
COUNT TIME..... : 240.0 MIN.
ALPHA BACK GROUND. : 0.1220
BETA BACK GROUND.. : 1.1900
BACK GROUND TIME.. : 500.0 MIN.
..... : 0.3000 L
ALPHA EFF..... : 0.3345
BETA EFF ..... : 0.4267
ALPHA ATTN..... : 0.5423
BETA ATTN..... : 0.8893
TO BETA X TALK..... : 0.07117
O ALPHA X TALK..... : 0.01000
ATIC ERROR..... : 0.1000

RESULTS ALPHA

Activity / Sample

ACTIVITY.....	:	2.230E+02	pCi/L	x 0.300 L = 66.90 pCi/sam
TWO SIG COUNT ERROR.....	:	5.454E+00		x 0.300 L = 1.636 pCi/sam
TPU.....	:	4.405E+01	pCi/L	x 0.300 L = 13.22 pCi/sam
LLD.....	:	7.469E-01	pCi/L	x 0.300 L = 0.2241 pCi/sam
MDC.....	:	9.617E-01	pCi/L	x 0.300 L = 0.2885 pCi/sam

RESULTS BETA

TIVITY.....	:	1.731E+02	pCi/L	x 0.300 L = 51.93 pCi/sam
TO SIG COUNT ERROR.....	:	3.377E+00		x 0.300 L = 1.013 pCi/sam
PU.....	:	3.409E+01	pCi/L	x 0.300 L = 10.23 pCi/sam
LD.....	:	1.115E+00	pCi/L	x 0.300 L = 0.3345 pCi/sam
DC.....	:	1.341E+00	pCi/L	x 0.300 L = 0.4023 pCi/sam

illy
3/95

3-JUN-1995 10:08 R300-V1.0

DATACHEM LABORATORIES
GROSS ALPHA / BETA ANALYSES
SDG : NA

ROUP ID..... : G955802X
AMPLE NAME..... : MXS 03847
AMPLE ID..... : S954Y05K

OUNTER ID..... : HT1000
OSITION NUMBER..... : C3
AMPLE ALPHA COUNT..... : 44.0
AMPLE BETA COUNT..... : 527.0
AMPLE COUNT TIME..... : 240.0 MIN.
AMPLE ALPHA BACK GROUND. : 0.1140
AMPLE BETA BACK GROUND.. : 1.2520
AMPLE BACK GROUND TIME.. : 500.0 MIN.
OLUME..... : 0.3000 L
AMPLE ALPHA EFF..... : 0.3290
AMPLE BETA EFF ..... : 0.4273
AMPLE ALPHA ATTN..... : 0.5386
AMPLE BETA ATTN..... : 0.8887
LPHA TO BETA X TALK..... : 0.08399
ETA TO ALPHA X TALK..... : 0.00991
YSTEMATIC ERROR..... : 0.1000

RESULTS ALPHA

			Activity /sam
LPHA ACTIVITY..... :	5.286E-01	pCi/L	x 0.300L = 0.1586 pCi/sam
LPHA TWO SIG COUNT ERROR..... :	5.154E-01		x 0.300L = 0.1546 pCi/sam
LPHA TPU..... :	5.257E-01	pCi/L	x 0.300L = 0.1577 pCi/sam
LPHA LLD..... :	7.392E-01	pCi/L	x 0.300L = 0.2218 pCi/sam
LPHA MDC..... :	9.550E-01	pCi/L	x 0.300L = 0.2865 pCi/sam

RESULTS BETA

ETA ACTIVITY..... :	3.758E+00	pCi/L	x 0.300L = 1.127 pCi/sam
ETA TWO SIG COUNT ERROR..... :	8.376E-01		x 0.300L = 0.25128 pCi/sam
ETA TPU..... :	1.115E+00	pCi/L	x 0.300L = 0.3345 pCi/sam
ETA LLD..... :	1.143E+00	pCi/L	x 0.300L = 0.3429 pCi/sam
ETA MDC..... :	1.374E+00	pCi/L	x 0.300L = 0.4122 pCi/sam

R. Jully
6/13/95

N-1995 09:13 R300-V1.0

DATACHEM LABORATORIES
GROSS ALPHA / BETA ANALYSES
SDG : NA

ID..... : G955802X
E NAME..... : EO 3881
E ID..... : S954P067

ER ID..... : HT1000
ION NUMBER..... : A2
E ALPHA COUNT..... : 341.0
E BETA COUNT..... : 1982.0
E COUNT TIME..... : 1000.0 MIN.
E ALPHA BACK GROUND. : 0.0440
E BETA BACK GROUND.. : 1.0280
E BACK GROUND TIME.. : 500.0 MIN.
E..... : 1.0000 Filter
E ALPHA EFF..... : 0.3304
E BETA EFF ..... : 0.4449
E ALPHA ATTN..... : 0.4109
E BETA ATTN..... : 0.8690
TO BETA X TALK..... : 0.09232
TO ALPHA X TALK..... : 0.01000
ATIC ERROR..... : 0.1000

RESULTS ALPHA

Activity/Sample

ACTIVITY..... : 1.028E+00 pCi/flt x 5 = 5.14 pCi
TWO SIG COUNT ERROR..... : 1.367E-01 x 5 = 0.6835 pCi
TPU..... : 2.435E-01 pCi/flt x 5 = 1.217 pCi
LLD..... : 1.254E-01 pCi/flt x 5 = 0.627 pCi
MDC..... : 1.114E-01 pCi/flt x 5 = 0.557 pCi

RESULTS BETA

CTIVITY..... : 1.098E+00 pCi/flt x 5 = 5.49 pCi
WO SIG COUNT ERROR..... : 1.449E-01 x 5 = 0.725 pCi
PU..... : 2.594E-01 pCi/flt x 5 = 1.297 pCi
LD..... : 2.129E-01 pCi/flt x 5 = 1.0645 pCi
DC..... : 1.770E-01 pCi/flt x 5 = 0.885 pCi

Prepared sample was a 1:5 dilution

Colley
1195

N-1995 08:57 R300-V1.0

DATACHEM LABORATORIES
GROSS ALPHA / BETA ANALYSES
SDG : NA

ID..... : G955802X
E NAME..... : EO 3882
E ID..... : S954P068

ER ID..... : HT1000
ION NUMBER..... : A3
E ALPHA COUNT..... : 376.0
E BETA COUNT..... : 1537.0
E COUNT TIME..... : 1000.0 MIN.
E ALPHA BACK GROUND. : 0.1220
E BETA BACK GROUND.. : 1.1900
E BACK GROUND TIME.. : 500.0 MIN.
E..... : 1.0000 Filter
E ALPHA EFF..... : 0.3345
E BETA EFF ..... : 0.4267
E ALPHA ATTN..... : 0.4233
E BETA ATTN..... : 0.8709
TO BETA X TALK..... : 0.07117
TO ALPHA X TALK..... : 0.01000
IATIC ERROR..... : 0.1000

RESULTS ALPHA

				Activity/sample
ACTIVITY..... :	8.470E-01 pCi/flt	x5	=	4.235 pCi
TWO SIG COUNT ERROR..... :	1.568E-01	x5	=	0.784 pCi
TPU..... :	2.283E-01 pCi/flt	x5	=	1.141 pCi
LLD..... :	2.002E-01 pCi/flt	x5	=	1.001 pCi
MDC..... :	1.721E-01 pCi/flt	x5	=	0.8605 pCi

RESULTS BETA

CTIVITY..... :	4.067E-01 pCi/flt	x5	=	2.033 pCi
WO SIG COUNT ERROR..... :	1.485E-01	x5	=	0.7425 pCi
PU..... :	1.685E-01 pCi/flt	x5	=	0.8425 pCi
LD..... :	2.383E-01 pCi/flt	x5	=	1.191 pCi
DC..... :	1.978E-01 pCi/flt	x5	=	0.989 pCi

Prepared sample was a 1:5 dilution.

Jully
14/95

4-JUN-1995 08:57 R300-V1.0

DATACHEM LABORATORIES
GROSS ALPHA / BETA ANALYSES
SDG : NA

ROUP ID..... : G955802X
AMPLE NAME..... : EO 3883
AMPLE ID..... : S954P069

OUNTER ID..... : HT1000
OSITION NUMBER..... : A4
AMPLE ALPHA COUNT..... : 457.0
AMPLE BETA COUNT..... : 2206.0
AMPLE COUNT TIME..... : 1000.0 MIN.
AMPLE ALPHA BACK GROUND. : 0.0860
AMPLE BETA BACK GROUND.. : 1.6820
AMPLE BACK GROUND TIME.. : 500.0 MIN.
OLUME..... : 1.0000 Filter
AMPLE ALPHA EFF..... : 0.3413
AMPLE BETA EFF ..... : 0.4559
AMPLE ALPHA ATTN..... : 0.3918
AMPLE BETA ATTN..... : 0.8661
LPHA TO BETA X TALK..... : 0.07529
ETA TO ALPHA X TALK..... : 0.00997
YSTEMATIC ERROR..... : 0.1000

RESULTS ALPHA

Activity / Sample

LPHA ACTIVITY..... : 1.295E+00 pCi/flt x5 = 6.475 pCi
LPHA TWO SIG COUNT ERROR..... : 1.673E-01 x5 = 0.8365 pCi
LPHA TPU..... : 3.040E-01 pCi/flt x5 = 1.52 pCi
LPHA LLD..... : 1.780E-01 pCi/flt x5 = 0.89 pCi
LPHA MDC..... : 1.545E-01 pCi/flt x5 = 0.7725 pCi

RESULTS BETA

ETA ACTIVITY..... : 5.834E-01 pCi/flt x5 = 2.917 pCi
ETA TWO SIG COUNT ERROR..... : 1.667E-01 x5 = 0.8335 pCi
ETA TPU..... : 2.021E-01 pCi/flt x5 = 1.011 pCi
ETA LLD..... : 2.666E-01 pCi/flt x5 = 1.333 pCi
ETA MDC..... : 2.208E-01 pCi/flt x5 = 1.104 pCi

prepare sample was a 1:5 dilution

R. Jully
6/14/95

N-1995 08:57 R300-V1.0

DATACHEM LABORATORIES
GROSS ALPHA / BETA ANALYSES
SDG : NA

ID..... : G955802X
E NAME..... : EO 3884
E ID..... : S954P06B

ER ID..... : HT1000
ION NUMBER..... : B2
E ALPHA COUNT..... : 361.0
E BETA COUNT..... : 1711.0
E COUNT TIME..... : 1000.0 MIN.
E ALPHA BACK GROUND. : 0.0660
E BETA BACK GROUND.. : 0.9520
E BACK GROUND TIME.. : 500.0 MIN.
E..... : 1.0000 Filter
E ALPHA EFF..... : 0.3396
E BETA EFF ..... : 0.4430
E ALPHA ATTN..... : 0.3812
E BETA ATTN..... : 0.8645
TO BETA X TALK..... : 0.07203
TO ALPHA X TALK..... : 0.00998
ATIC ERROR..... : 0.1000

RESULTS ALPHA

				Activity/Sample
ACTIVITY..... :	1.060E+00	pCi/flt	x 5 =	5.30 pCi
TWO SIG COUNT ERROR..... :	1.529E-01		x 5 =	0.7645 pCi
TPU..... :	2.579E-01	pCi/flt	x 5 =	1.2895 pCi
LLD..... :	1.611E-01	pCi/flt	x 5 =	0.8055 pCi
MDC..... :	1.410E-01	pCi/flt	x 5 =	0.705 pCi

RESULTS BETA

CTIVITY..... :	8.821E-01	pCi/flt	x 5 =	4.4105 pCi
WO SIG COUNT ERROR..... :	1.384E-01		x 5 =	0.692 pCi
PU..... :	2.215E-01	pCi/flt	x 5 =	1.1075 pCi
LD..... :	2.068E-01	pCi/flt	x 5 =	1.034 pCi
DC..... :	1.720E-01	pCi/flt	x 5 =	0.860 pCi

Prepared sample was a 1:5 dilution

1/4/95

Section 2. Instrument Performance and Calibration Data
Proportional Counting
Inventory Checklist

- [x] Instrument ID
- [x] Date and Time Calibrated, Calibration Check, Analysis Initials
- [x] NIST Traceable Certificate(s), and Activity of Standard(s)
- [x] Attenuation/Absorption Curve(s)
- [x] Instrument Efficiencies
- [x] Alpha/Beta Crosstalk
- [NA] Statistical Results Used to Demonstrate Detector Reliability
- [NA] Results of Chi-Square Tests Used to Evaluate Efficiency Checks
- [x] Background Counts Obtained for Each Detector
- [x] Background Count Duration
- [NA] Statistical Results Used to Demonstrate Background Reliability

Section 2. Instrument Performance and Calibration Data
Proportional Counting
Reviewer Checklist

- X The Instrument Performance and Calibration Data Inventory Checklist above is complete.
- X Specified analytical protocols are followed for particular contract requirements.
- X Conditions of instrument setup are noted.
- X NCR(s) noted, and affected instruments not used.

7194

CALIBRATION/MAINTENANCE LOG

Instrument: HT-1000-1

000187

	DATE	ANALYST	CALIBRATION/MAINTENANCE
min	4/26/95	RLK	Check Sources all detectors
2 min	5/1/95	RLK	Backgrounds all detectors
0 min	5/10/95	RLK	BACKGROUND Collect all detectors
	5/10/95	RLK	Check sources Drawers A, B, + C
bags 00 lbs)	5/10/95	RLK	Changed gas bottles + filter
0 min	5/11/95	RLK	Calibrated all detectors
min	5/11/95	RLK	Background Collect all detectors
min	5/12/95	RLK	Check Sources All drawers/detectors
min	5/21/95	WMS	BACKGROUND COLLECT All detectors
min	5/21/95	WMS	Check sources Drawer A / detectors 1-4
0 min	5-22-95	CMW	Bkg collect Drawer A detectors 1-4
	5-24-95	RLK	Background Collect: all detectors
min	5-25-95	CMW	Check Sources all detectors
min	5-26-95	CMW	Check sources Drawer A, B, detectors 1-4
200 lbs) days	6-5-95	CMW	Background collect: all detectors
	6-5-95	RLK	Changed gas bottles + filters
min	6-5-95	CMW	Calibrated drawers A, B, + C
	6-6-95	CMW	Background collect drawers A, B + C
	6-6-95	CMW	Calibrated drawer D
	6-6-95	CMW	Check sources drawers A, B
min	6-6-95	CMW	Background collect drawer D
	6-9-95	RLK	Check sources / all detectors
	6-9-95	RLK	Background collect

CERTIFICATE OF CALIBRATION
ALPHA STANDARD SOURCE

Radionuclide:	Pu-239	Customer:	DATACHEM LABORATORIES
Half Life:	(2.411 ± 0.003) x 10^4 years	P.O.No.:	7302
Catalog No.:	EAB-239	Reference Date:	July 1 1991 12:00 PST.
Source No.:	Q-088	Contained Radioactivity:	6,080 dpm.

Description of Source

a. Capsule type:	PL
b. Nature of active deposit:	Electrodeposited and diffusion bonded oxide
c. Active area/ diameter/volume:	45 mm
d. Backing:	0.254 mm stainless steel
e. Cover:	100 μgram/cm^2 gold

CAUTION!
DELICATE SURFACE
DO NOT WIPE
ACTIVE AREA

Radioimpurities

None detected

Method of Calibration

The source was assayed using a windowless internal gas flow proportional counter.

Uncertainty of Measurement

a. Systematic uncertainty in instrument calibration:	± 1.3%
b. Random uncertainty in assay:	± 1.4%
c. Random uncertainty in weighing(s):	± 0.0%
d. Total uncertainty at the 99% confidence level:	± 2.7%

NIST Traceability

This calibration is implicitly traceable to the National Institute of Standards and Technology.

Notes

1. Nuclear data were taken from "Table of Isotopes", Seventh Edition, edited by Virginia S. Shirley.
2. IPL participates in an NIST measurement assurance program to establish and maintain implicit traceability for a number of nuclides, based on the blind assay (and later NIST certification) of Standard Reference Materials. (As in NRC Regulatory Guide 4.15)

QUALITY CONTROL

ISOTOPE PRODUCTS LABORATORIES
1800 No. Keystone Street.,
Burbank, California 91504
(818) 843 - 7000

IPL Ref. No.: 388-4-1

CERTIFICATE OF CALIBRATION
BETA STANDARD SOURCE

Radionuclide:	Sr-90	Customer:	DATACHEM LABORATORIES
Half Life:	28.5 ± 0.2 years	P.O.No.:	7302
Catalog No.:	EAB-090	Reference Date:	June 15 1991 12:00 PST.
Source No.:	P-638	Contained Radioactivity:	30,200 dpm.

Description of Source

a. Capsule type: PL

b. Nature of active deposit: Distributed and evaporated metallic salts

c. Active diameter/volume: 45 mm

d. Backing: Stainless steel

e. Cover: 0.9 mg/cm² aluminized myl

CAUTION!
DELICATE SURFACE
DO NOT WIPE
ACTIVE AREA

Radioimpurities

None detected

Method of Calibration

The source was prepared from a e concentration in μCi/gram was determined by a liquid scintillatio

MYLAR COVER WILL REDUCE ACTIVITY BY ~~3.37%~~.
3% - Sr-90
.37% - Y-90

Uncertainty of Measurement

a. Systematic uncertainty in instru

b. Random uncertainty in assay: ± 0.5%

c. Random uncertainty in weighing(s): ± 0.2%

d. Total uncertainty at the 99% confidence level: ± 2.2%

NIST Traceability

This calibration is implicitly traceable to the National Institute of Standards and Technology.

Notes

1. Nuclear data were taken from "Table of Isotopes", Seventh Edition, edited by Virginia S. Shirley.
2. IPL participates in an NIST measurement assurance program to establish and maintain implicit traceability for a number of nuclides, based on the blind assay (and later NIST certification) of Standard Reference Materials. (As in NRC Regulatory Guide 4.15)

QUALITY CONTROL

ISOTOPE PRODUCTS LABORATORIES
1800 No. Keystone Street.,
Burbank, California 91504
(818) 843 - 7000

IPL Ref. No.: 379-75-7

DCL/RCL

TITLE DCL/RCL /CHECK SOURCES

Project No.

Book No. 2694

From Page No. 27

Pu-239-001-IS (Activity = 656 pC/mL)

1/11/94 SR-90-001-IS (Act. = 220.7 pC/mL)

	Pu-239-001-IS wt.(g)	Pu-239-001-IS mL	SR-90-001-IS wt(g)	SR-90-001-IS mL	Activity Pu-239	Activity SR-90
CKS-001	1.0006	1.0022	1.0010	1.0026	657.4	221.3
CKS-002	1.0088	1.0104	1.0077	1.0093	662.8	222.8
CKS-003	1.0052	1.0068	1.0013	1.0029	660.5	221.3
CKS-004	1.0096	1.0112	1.0004	1.0020	663.3	221.1
CKS-001	1.5064	1.5085	1.5070	1.5091	989.6	333.1
CKS-002	1.5098	1.5119	1.5100	1.5121	991.8	333.7
CKS-003	1.5017	1.5038	1.5179	1.5200	986.5	335.5
CKS-004	1.5003	1.5024	1.5348	1.53692	985.6	339.2

	Pu-239	SR-90 (10/7/91)	Decay corrected SR-90 Activity (1/12/94)
CKS-001	1647.0 pC/	554.4	1025.2 pC/
CKS-002	1654.6 pC/	556.5	1029.1 pC/
CKS-003	1647.0 pC/	556.8	1029.7 pC/
CKS-004	1648.9 pC/	560.3	1036.1 pC/

CKS-001 Activities 10 minute counts

	Det 1		Det. 2		Det 3		Det 4	
File Name	α	β	α	β	α	β	α	β
CKS-0118 A	1260	909	1220	889	1340	930	1410	983
CKS-0118 B	1490	1020	1390	1000	1500	1010	1480	998
CKS-0118 C	1230	871	1270	963	1320	913	1370	949
CKS-0118 D	1390	1010	~~1460~~ 1350	~~998~~	1300	923	1360	970
CKS-0118 E	1290	874	1270	939	1400	971	1340	941
CKS-0119 A	1200	847	1320	966	1300	908	1380	969
$\bar{X}$	1310	922	1303	958	1360	943	1390	968
S	109.7	74.9	61.9	40.0	78.0	39.9	49.8	21.1
2σ	219	150	124	80	156	80	100	42
Target	1647	1025.2	1647	1025.2	1647	1025.2	1647.	1025.2
%	79.5%	89.9%	79.1%	93.4%	82.6%	92.0%	84.4%	94.4%

N=24 $\bar{X}_\alpha$ = 1341 ; S = 81.6 ; 2σ = 163 % rec = 81.42

$\bar{X}_\beta$ = 948 ; S = 48.3 ; 2σ = 97 % rec 92.47

To Page No. 28

Witnessed & Understood by me,	Date	Invented by	Date	
	2-1-94	Recorded by	1/20/94	000191

DCL/RCL Project No.

TLE DCL/RCL Check sources Book No. 2694

From Page No. 27 | RK-0121 A | 60 min counts

Sample	Planchet	Tare wt.	Planchet + Sample	Sample wt. (mg)	Self-Absorption Alpha Eff A	Self-Absorption Beta Eff A	Activity α	Activity β	Target α	Target β
KS-001	C-614	7.34259	7.34525	2.66	0.79062	0.93306	1640	1030	1647.0	1025.0
KS-002	C-615	7.33647	7.33938	2.91	0.78099	0.93112	1610	1050	1654.6	1028.9
KS-003	C-616	7.19858	7.20055	1.97	0.82145	0.93946	1650	1020	1647.0	1029.4
KS-004	C-617	7.33915	7.34113	1.98	0.82094	0.93935	1670	1040	1648.9	1035.9

% Recovery

CSC-001 α	CSC-001 β	CSC-002 α	CSC-002 β	CSC-003 α	CSC-003 β	CSC-004 α	CSC-004 β
99.57	100.5	~~100.3~~ 103.3	102.1	100.2	99.09	101.3	100.4

Sample	Detector 1 ALPHA	Detector 1 BETA	Detector 2 ALPHA	Detector 2 BETA	Detector 3 ALPHA	Detector 3 BETA	Detector 4 ALPHA	Detector 4 BETA	$\bar{X}$ ± 2s (α)	$\bar{X}$ ± 2s (β)
KS-001	1570	1010	1560	1010	1660	992	1570	987	1590 ± 94	1000 ± 24
KS-002	~~1680~~ 1640	~~1030~~ 1010	1680	1040	1750	1020	1650	1010	1680 ± 99	1025 ± 26
KS-003	1640	1050	1600	1040	1770	1030	1740	1040	1688 ± 161	1040 ± 16
KS-004	1590	1040	1580	1070	1640	1040	1630	1050	1610 ± 57	1050 ± 28

Sample	Detector 1 α	Detector 1 β	Detector 2 α	Detector 2 β	Detector 3 α	Detector 3 β	Detector 4 α	Detector 4 β	$\bar{X}$ ± 2s α	$\bar{X}$ ± 2s β
KS-001	95.32	98.54	94.72	98.54	100.79	96.78	95.32	96.29	96.54 ± 5.70	97.54 ± 2.35
KS-002	99.12	100.11	101.5	101.1	105.77	99.13	99.72	98.16	101.53 ± 6.01	99.63 ± 2.53
KS-003	99.57	102.0	97.15	101.03	107.5	100.1	105.65	101.03	~~99~~ 102.47 ± 9.81	101.04 ± 1.55
KS-004	96.43	100.40	95.82	103.29	99.46	100.40	98.85	101.36	97.64 ± 3.57	101.36 ± 2.72
$\bar{X}$	97.61	100.26	97.30	100.99	103.38	99.10	99.89	99.21	99.55	99.89
± 2s	± 4.12	± 2.84	± 5.95	± 3.88	± 7.73	± 3.28	± 8.58	± 4.84	± 5.79	± 3.48

(α) $\bar{X}$ = 99.54 ± ~~7.38~~ 8.9 N = 16

(β) $\bar{X}$ = 99.89 ± 3.75 N = 16

Ray Kern 1/25/94

To Page No. 28

Witnessed & Understood by me,	Date	Invented by	Date
L W Frick	2-1-94	Recorded by Ray Kern	1/25/94

DCL_STD.REP

DataChem Laboratories Alpha/Beta Counting Report

Canberra HT-1000 System

Report Date: June 12, 1995 02:44 pm

Data File
CKS0612A.SLK

Drawer Program Parameters			
	High Voltage	Amp. Gain	Count Time
Drawer A:	1330	High	600 sec.

Detector Parameters				
Alpha:	Window	Efficiency	Background	Crosstalk
Det A/1	65.9-100%	33.30%	0.37599999	7.5802469
Det A/2	65.4-100%	33.04%	0.044	9.2323008
Det A/3	69.6-100%	33.45%	0.122	7.116519
Det A/4	70.3-100%	34.13%	0.086	7.5292134
Beta:	Window	Efficiency	Background	Crosstalk
Det A/1	0 - 65.8%	44.30%	3.312	0.99590111
Det A/2	0 - 65.3%	44.49%	1.028	0.99997914
Det A/3	0 - 69.5%	42.67%	1.1900001	1.0001959
Det A/4	0 - 70.2%	45.59%	1.682	0.99723953

Det A/1	Sample:	CKS-001A	Sample Factor:	1		Jun 12, 1995 14:34:41	
Alpha	Gross:	7959	Net:	7.96E+02	±17.485875	pCi:	1.08E+03 ±23.651264
Beta	Gross:	8693	Net:	8.06E+02	±17.679556	pCi:	8.19E+02 ±17.976281
Det A/2	Sample:	CKS-002A	Sample Factor:	1		Jun 12, 1995 14:34:41	
Alpha	Gross:	9147	Net:	9.15E+02	±18.745438	pCi:	1.25E+03 ±25.553691
Beta	Gross:	9609	Net:	8.75E+02	±18.431018	pCi:	8.86E+02 ±18.659958
Det A/3	Sample:	CKS-003A	Sample Factor:	1		Jun 12, 1995 14:34:41	
Alpha	Gross:	7951	Net:	7.95E+02	±17.47703	pCi:	1.07E+03 ±23.534703
Beta	Gross:	8344	Net:	7.77E+02	±17.331055	pCi:	8.20E+02 ±18.294919
Det A/4	Sample:	CKS-004A	Sample Factor:	1		Jun 12, 1995 14:34:41	
Alpha	Gross:	8025	Net:	8.02E+02	±17.558163	pCi:	1.06E+03 ±23.173982
Beta	Gross:	8371	Net:	7.75E+02	±17.32431	pCi:	7.66E+02 ±17.116251

R. Tulley
6/13/95

DCL_STD.REP

DataChem Laboratories Alpha/Beta Counting Report

Canberra HT-1000 System

ort Date: June 12, 1995 03:19 pm

Data File
CKS0612B.SLK

Drawer Program Parameters			
	High Voltage	Amp. Gain	Count Time
wer B:	1330	High	600 sec.

Detector Parameters				
Alpha:	Window	Efficiency	Background	Crosstalk
Det B/1	74.3-100%	33.09%	0.148	7.6540756
Det B/2	77.3-100%	33.96%	0.066	7.2033896
Det B/3	78.4-100%	31.44%	0.09	9.5462275
Det B/4	77.8-100%	32.95%	0.11	8.0109806
Beta:	Window	Efficiency	Background	Crosstalk
Det B/1	0 - 74.2%	43.91%	1.516	0.99632984
Det B/2	0 - 77.2%	44.30%	0.95200002	0.99805003
Det B/3	0 - 78.3%	42.62%	1.368	1.0187516
Det B/4	0 - 77.7%	42.82%	1.62	1.0118318

B/1	Sample:	CKS-001A	Sample Factor: 1		Jun 12, 1995 15:09:31	
a	Gross:	8089	Net:	8.09E+02 ±17.62805	pCi:	1.10E+03 ±23.997631
	Gross:	8865	Net:	8.23E+02 ±17.849637	pCi:	8.44E+02 ±18.311231
B/2	Sample:	CKS-002A	Sample Factor: 1		Jun 12, 1995 15:09:31	
a	Gross:	8954	Net:	8.95E+02 ±18.546626	pCi:	1.19E+03 ±24.600102
	Gross:	9431	Net:	8.78E+02 ±18.420567	pCi:	8.92E+02 ±18.730712
B/3	Sample:	CKS-003A	Sample Factor: 1		Jun 12, 1995 15:09:31	
a	Gross:	7386	Net:	7.39E+02 ±16.844621	pCi:	1.06E+03 ±24.133603
	Gross:	8305	Net:	7.59E+02 ±17.16269	pCi:	8.02E+02 ±18.137521
B/4	Sample:	CKS-004A	Sample Factor: 1		Jun 12, 1995 15:09:31	
a	Gross:	7231	Net:	7.23E+02 ±16.666942	pCi:	9.88E+02 ±22.785503
	Gross:	7546	Net:	6.95E+02 ±16.414393	pCi:	7.31E+02 ±17.265828

Fully
13/95

DCL_STD.REP

DataChem Laboratories Alpha/Beta Counting Report

Canberra HT-1000 System

ort Date: June 12, 1995 03:31 pm

Data File
CKS0612C.SLK

Drawer Program Parameters			
	High Voltage	Amp. Gain	Count Time
wer C:	1330	High	600 sec.

Detector Parameters					
Alpha:		Window	Efficiency	Background	Crosstalk
	Det C/1	67.1-100%	33.45%	0.112	7.9523106
	Det C/2	70.2-100%	33.25%	0.062	9.0144672
	Det C/3	76.8-100%	32.90%	0.114	8.3989506
	Det C/4	72.9-100%	32.80%	0.178	8.399148
Beta:		Window	Efficiency	Background	Crosstalk
	Det C/1	0 - 67.0%	45.02%	1.256	1.0026717
	Det C/2	0 - 70.1%	44.81%	1.262	0.99805158
	Det C/3	0 - 76.7%	42.73%	1.252	0.99131513
	Det C/4	0 - 72.8%	43.56%	1.63	1.0033267

C/1	Sample:	CKS-001A	Sample Factor:	1		Jun 12, 1995 15:21:36	
a	Gross:	8458	Net:	8.46E+02	±18.025631	pCi:	1.14E+03 ±24.273454
	Gross:	9148	Net:	8.46E+02	±18.101343	pCi:	8.47E+02 ±18.110867
C/2	Sample:	CKS-002A	Sample Factor:	1		Jun 12, 1995 15:21:36	
a	Gross:	8801	Net:	8.80E+02	±18.387488	pCi:	1.19E+03 ±24.910761
	Gross:	9607	Net:	8.80E+02	±18.475496	pCi:	8.85E+02 ±18.572001
C/3	Sample:	CKS-003A	Sample Factor:	1		Jun 12, 1995 15:21:36	
a	Gross:	7573	Net:	7.57E+02	±17.056531	pCi:	1.04E+03 ±23.355999
	Gross:	8411	Net:	7.76E+02	±17.342085	pCi:	8.18E+02 ±18.28328
C/4	Sample:	CKS-004A	Sample Factor:	1		Jun 12, 1995 15:21:36	
a	Gross:	8120	Net:	8.12E+02	±17.661802	pCi:	1.11E+03 ±24.257579
	Gross:	8455	Net:	7.76E+02	±17.344337	pCi:	8.02E+02 ±17.936857

Fully
3/95

DCL_STD.REP

DataChem Laboratories Alpha/Beta Counting Report

Canberra HT-1000 System

port Date: June 13, 1995 08:53 am

Data File
CKS0613A.SLK

Drawer Program Parameters			
	High Voltage	Amp. Gain	Count Time
wer A:	1330	High	600 sec.

Detector Parameters				
Alpha:	Window	Efficiency	Background	Crosstalk
Det A/1	65.9-100%	33.30%	0.37599999	7.5802469
Det A/2	65.4-100%	33.04%	0.044	9.2323008
Det A/3	69.6-100%	33.45%	0.122	7.116519
Det A/4	70.3-100%	34.13%	0.086	7.5292134
Beta:	Window	Efficiency	Background	Crosstalk
Det A/1	0 - 65.8%	44.30%	3.312	0.99590111
Det A/2	0 - 65.3%	44.49%	1.028	0.99997914
Det A/3	0 - 69.5%	42.67%	1.1900001	1.0001959
Det A/4	0 - 70.2%	45.59%	1.682	0.99723953

A/1	Sample:	CKS-001A	Sample Factor:	1	Jun 13, 1995 08:42:47	
a	Gross:	8213	Net:	8.21E+02 ±17.7627	pCi:	1.11E+03 ±24.025696
	Gross:	8640	Net:	7.98E+02 ±17.602474	pCi:	8.12E+02 ±17.897905
A/2	Sample:	CKS-002A	Sample Factor:	1	Jun 13, 1995 08:42:47	
a	Gross:	8927	Net:	8.93E+02 ±18.518639	pCi:	1.22E+03 ±25.244519
	Gross:	9472	Net:	8.64E+02 ±18.30704	pCi:	8.74E+02 ±18.53444
A/3	Sample:	CKS-003A	Sample Factor:	1	Jun 13, 1995 08:42:47	
a	Gross:	7738	Net:	7.74E+02 ±17.241344	pCi:	1.04E+03 ±23.217327
	Gross:	8455	Net:	7.89E+02 ±17.469129	pCi:	8.33E+02 ±18.440672
A/4	Sample:	CKS-004A	Sample Factor:	1	Jun 13, 1995 08:42:47	
a	Gross:	8132	Net:	8.13E+02 ±17.674829	pCi:	1.07E+03 ±23.327963
	Gross:	8307	Net:	7.68E+02 ±17.244911	pCi:	7.59E+02 ±17.037805

Fully
13/95

000196

DCL_STD.REP

DataChem Laboratories Alpha/Beta Counting Report

Canberra HT-1000 System

ort Date: June 13, 1995 09:49 am

Data File
CKS0613B.SLK

Drawer Program Parameters			
	High Voltage	Amp. Gain	Count Time
wer B:	1330	High	600 sec.

Detector Parameters					
Alpha:		Window	Efficiency	Background	Crosstalk
	Det B/1	74.3-100%	33.09%	0.148	7.6540756
	Det B/2	77.3-100%	33.96%	0.066	7.2033896
	Det B/3	78.4-100%	31.44%	0.09	9.5462275
	Det B/4	77.8-100%	32.95%	0.11	8.0109806
Beta:		Window	Efficiency	Background	Crosstalk
	Det B/1	0 - 74.2%	43.91%	1.516	0.99632984
	Det B/2	0 - 77.2%	44.30%	0.95200002	0.99805003
	Det B/3	0 - 78.3%	42.62%	1.368	1.0187516
	Det B/4	0 - 77.7%	42.82%	1.62	1.0118318

B/1	Sample:	CKS-001A	Sample Factor:	1		Jun 13, 1995 09:39:00		
a	Gross:	8448	Net:	8.45E+02	±18.014981	pCi:	1.15E+03	±24.524372
	Gross:	8781	Net:	8.12E+02	±17.731548	pCi:	8.33E+02	±18.190088
B/2	Sample:	CKS-002A	Sample Factor:	1		Jun 13, 1995 09:39:00		
a	Gross:	8766	Net:	8.77E+02	±18.350889	pCi:	1.16E+03	±24.340478
	Gross:	9186	Net:	8.55E+02	±18.176582	pCi:	8.69E+02	±18.482619
B/3	Sample:	CKS-003A	Sample Factor:	1		Jun 13, 1995 09:39:00		
a	Gross:	7240	Net:	7.24E+02	±16.677305	pCi:	1.04E+03	±23.893887
	Gross:	8350	Net:	7.65E+02	±17.227041	pCi:	8.08E+02	±18.205527
B/4	Sample:	CKS-004A	Sample Factor:	1		Jun 13, 1995 09:39:00		
a	Gross:	7273	Net:	7.27E+02	±16.715274	pCi:	9.94E+02	±22.851578
	Gross:	7447	Net:	6.85E+02	±16.294483	pCi:	7.20E+02	±17.139699

Fully
3/95

RADIOCHEMISTRY LABORATORY

7194

23

RADIOACTIVE MATERIAL INVENTORY
INTERMEDIATE STANDARD LOG

S. ID: Pu-239-001-IS
olvent: 0.8 N HNO3
oncentration: 656 pCi/ml

Date: 4-9-92
Final Volume: 100 ml
Source I.D.: 2510-1

sage: continued from page 13

ate	Amount	Activity (µCi)	Running Total (µCi)	I.D.
/92	10 ml	6560 pCi/ml	0.041454	CAL 11-54 HDR
2/93	0.8132 mL	0.000533 µCi	0.040921	N.B 2345 P 32 self absorption $
2/93	2.4396 mL	0.001600	0.039326	N-B 2345 P 32 self absorption $
3/93	0.8132 mL	0.000533	0.03879	NB2345 P 32 self absorption $
/93	2.4396 mL	0.001600	0.03719	NB 2345 P 34 self abs. $'s
5/93	1.6264 mL	0.001066	0.03612	NB 2345 P 36 self abs $'s
/93	0.8132 mL	0.0005335	0.03559	NB 2345 P 36 self abs $'s
/93	0.6099 mL	0.0004000	0.03519	NB 2345 P 44 LCS for SX-0086 +
/93	0.4066	0.0002667	0.03492	NB 2345 P 44 LCS for SX0086 +
/93	6.0864	0.003992	0.03093	Pu-239 standards PAFL-3101-S
/93	0.19903	0.0001305	0.03080	LC0430 for EM-1054 S93-0244 - 1056
3/93	0.20016	0.0001313	0.03067	LC0418 for ELP 13301-13 + ABYL00 NB2436 p17
-93	2.977	0.001952	0.02871	Pu standards for self abs. p21 NB2436
-93	0.6087	0.000399	0.02831	self abs. p22 NB 2436
-93	0.09976	0.0000654	0.02825	LC0616, U93-0080, 0096, S93-310, 0385
3-93	0.09976	0.0000654	0.02818	LC0623 A, B, C for training
5-93	0.09976	0.0000654	0.02812	LC625 for S93-0294 + S93-0405
-93	17.117 g	0.01122875	0.01689	U-Pu-Am WS Lab Book #2360 pg 72
-93	0.09990 mL	8/9/93 0.0000655	0.01682	LC-0809 for EPA Audit EM 2066
1-93	4.1773	0.0027403	0.01415	LCS for EPA Audit
-94	4.0305	0.0026440	0.01150	check stds Source CKS-001-4
94	6.0182	0.0039477	0.007558	check source stds CKS-001-004
94 RL	0.300	0.000457	0.007101	gross α/β LCS
94 RL	0.100	0.0000656	0.007035	gross α/β LCS
94 RL	1.021	0.0006698	0.006365	gross α/β LCS

RADIOCHEMISTRY LABORATORY

7194

RADIOACTIVE MATERIAL INVENTORY SOURCE LOG

CAUTION
RADIOACTIVE MATERIAL
SOLN 2510-1 WT 5.0g
AMT. [redacted]g
ISOTOPE Pu-239
DATE 12/13/[redacted]00;0400PST
ENVIRONMENTAL MONITORING SYSTEMS LABORATORY—LAS VEGAS

Vendor I.D.: SRM 2510-1

Date Received:

RCL I.D.: ~~Pu-239-001-FS~~ 2510-1

Isotopes/Form	Activity (µCi)	Mass	Date
Pu-239	0.065641	5.563g	4-8-92

Usage:

Date	Amount	Activity (µCi)	Running Total (µCi)	I.D.
4-8-92	5.563g	0.065641	Ø	Pu-239-001-FS

KES-4-2-92 7194

U.S. Environmental Protection Agency
Environmental Monitoring Systems Laboratory-Las Vegas
Nuclear Radiation Assessment Division

Calibration Certificate

Description

Principal radionuclide: PLUTONIUM-239 Half-life: 2.4×10^4 years

Nominal activity: 59 nano curies

Nominal volume: 5 ml in ampoule/bottle number: 2510-1

Measurement

Activity of principal radionuclide

Activity per gram of this solution

11.8 nano curies of Plutonium-239

at 0400 hours PST on December 13, 1990

Activity of daughter radionuclide

The principal activity was accompanied at the quoted time by

curies Per gram

of the daughter nuclide

Total mass of this solution

APPROX. 5.0 grams

Method of measurement

The activity of the primary solution was measured by an internal gas flow proportional counter.

The activity of the dilution was measured by liquid scintillation counting.

Useful Life

This radionuclide has decayed through half lives since it was obtained by EMSL-LV

We recommend that this solution should not be used after

000200

Purity

The manufacturer states that activities other than that of the principal nuclide and of its daughter nuclides, if any, were estimated/known to be:

(1) see remarks	less than equal to	%	of the principal activity
(2)	less than equal to	%	of the principal activity
(3)	less than equal to	%	of the principal activity

The activity of impurity (1) is not (2) is not (3) is not included in the quoted figures of the principal activity.

Random Errors

The precision of this standard was such that the certified value of the radioactive concentration of the principal activity had a standard error (sm) not greater than ± 0.13 %
(The 99.7% confidence limits are given by t(sm) where t is obtained from the student t factor for the degree of freedom (n-1)).

The maximum uncertainty due to the assessable systematic errors (dilution, counting, and known uncertainty of the standard) is obtained by the separate arithmetic summation of the positive and negative systematic error ($+\delta - \delta'$). These have been estimated not to exceed

+ 2.7 % or - 2.7 %

the overall uncertainty (often called accuracy) is an estimate of the possible divergence of the quoted result from the true value. It is a combination of random error [t(sm)] at the 99.7% confidence limits and the worst case estimate of the systematic errors ($+\delta, -\delta'$)
The overall uncertainty is therefore calculated on the basis of + [t(sm) $+\delta$], - [t(sm) $+\delta$]
and is + 3.1 %, - 3.1 % of the quoted radioactive concentration.

Decay Schemes

This standardization is based on the following assumptions of the principle nuclide, its daughter nuclides and impurities (no allowance for error in these assumptions or the assumption of quoted half-life have been included in the statement of accuracy above).

Plutonium-239 and impurities were assumed to decay 100 percent by alpha emission.

Chemical Composition of Solution

Carrier content per gram of solution:

Other components:

4M Nitric acid

Preservative:

Remarks

IMPURITIES:

Pu-238	0.033%	of the total activity
Pu-240	4.6×10^{-5}%	of the total activity
Pu-241	1.5×10^{-3}%	of the total activity
Pu-242	8.8×10^{-6}%	of the total activity
Pu-244	6.2×10^{-9}%	of the total activity

Date Certificate Prepared December 13, 1990

Approval Signature Paul B. Hahn

Revised 1/84

CONTINUED FROM Pg. 35

RADIOCHEMISTRY LABORATORY

RADIOACTIVE MATERIAL INVENTORY
INTERMEDIATE STANDARD LOG

I.S. ID: Sr-90-001-IS
Solvent: 1.0 M HNO_3
Concentration: 228.7 pCi/mL

Date: 10-2-91
Final Volume: 100 mL
Source I.D.: 2454-2

Usage:

Date	Amount	Activity (µCi)	Running Total (µCi)	I.D.
10-19-93 PMC	0.99786 mL	0.0002202	0.00685482	Y-90-CS4
11-25-93 PMC	0.09837 mL	0.0000217	0.00683311	TIEPA-19
PMC			0.00681142	20
PMC			0.00678972	21
11/17/93	4.19528 mL	0.0009259	0.0059531	LCS for EPA Audit
1-4-94 PMC	0.99786 mL	0.0002202	0.0057329	T1 for Total Sr LCS
PMC			0.0055127	T2
PMC			0.0052926	T3
PMC			0.0050723	T5
1-4-94 PMC	0.99786	0.0002202	0.0048521	STDSPK1
PMC			0.0046319	STDSPK2
1-11-94	4.0104	0.0008851	0.0037468	check source stds CKS-001-4
1-12-94	6.0697	0.001339	0.0024072	check source stds CKS-001-004
2-1-94 RL	~~0.099~~ 0.303 mL	0.000137	0.00227	gross α/β LCS
2-7-94 RL	0.100	0.00002207	0.00224793	gross α/β LCS

RADIOCHEMISTRY LABORATORY

RADIOACTIVE MATERIAL INVENTORY SOURCE LOG

CAUTION
RADIOACTIVE MATERIAL
SOLN 2454-2 WT ~5.0g
AMT. 453 nanoCi/g
ISOTOPE Sr-90
DATE 9/5/90 0400PST
ENVIRONMENTAL MONITORING SYSTEMS LABORATORY—LAS VEGAS

Vendor I.D.: SPM 2454-2
Date Received: 9-30-91
RCL I.D.: 2454-2

THIS STD ACTIVITY IS NOT CORRECTED FOR Y-90 EQUILIBRIUM. CCW

Isotopes/Form	Activity (µCi)	Mass	Date
Sr-90/LIQ	0.022067	4.9541g	10-7-91

Usage:

Date	Amount	Activity (µCi)	Running Total (µCi)	I.D.
10-7-91	4.9541 g	0.022067	Ø	Sr-90-001-IS

U.S. Environmental Protection Agency
Environmental Monitoring Systems Laboratory-Las Vegas
Nuclear Radiation Assessment Division

Calibration Certificate

Description

Principal radionuclide: STRONTIUM-90 Half-life: 28.6 years

Nominal activity: 22.9 nano curies

Nominal volume: 5 ml in ampoule/bottle number: 2454-2

Measurement

Activity of principal radionuclide

Activity per gram of this solution

4.58 nano curies of Strontium-90

at 0400 hours PST on September 5, 1990

Activity of daughter radionuclide

The principal activity was accompanied at the quoted time by

4.58 nano curies Per gram

of the daughter nuclide Yttrium-90

Total mass of this solution

APPROX. 5.0 grams

Method of measurement

The activity of the primary solution was measured by four pi efficiency tracing.

The activity of the dilution was measured by liquid scintillation counting.

Useful Life

This radionuclide has decayed through [ ] half lives since it was obtained by EMSL-LV

We recommend that this solution should not be used after September 1995

Purity

The manufacturer states that activities other than that of the principal nuclide and of its daughter nuclides, if any, were estimated/known to be:

(1) others	less than ~~xxxxxxx~~	0.01 %	of the principal activity
(2)	less than equal to	%	of the principal activity
(3)	less than equal to	%	of the principal activity

The activity of impurity (1) is not (2) is not (3) is not included in the quoted figures of the principal activity.

Random Errors

The precision of this standard was such that the certified value of the radioactive concentration of the principal activity had a standard error (sm) not greater than ± 0.11 %
(The 99.7% confidence limits are given by t(sm) where t is obtained from the student t factor for the degree of freedom (n-1)).

The maximum uncertainty due to the assessable systematic errors (dilution, counting, and known uncertainty of the standard) is obtained by the separate arithmetic summation of the positive and negative systematic error ($+\delta - \delta'$). These have been estimated not to exceed

+ 1.1 % or - 1.1 %

the overall uncertainty (often called accuracy) is an estimate of the possible divergence of the quoted result from the true value. It is a combination of random error [t(sm)] at the 99.7% confidence limits and the worst case estimate of the systematic errors ($+\delta, -\delta'$)
The overall uncertainty is therefore calculated on the basis of $+ [t(sm) + \delta], - [t(sm) + \delta]$
and is + 2.5 %, - 2.5 % of the quoted radioactive concentration.

Decay Schemes

This standardization is based on the following assumptions of the principle nuclide, its daughter nuclides and impurities (no allowance for error in these assumptions or the assumption of quoted half-life have been included in the statement of accuracy above).

Strontium-90 decays 100 percent by beta emission to yttrium-90.

Yttrium-90 decays also by beta emission.

Chemical Composition of Solution

Carrier content per gram of solution:

100 micrograms strontium

100 micrograms yttrium

Preservative:

Other components:

0.1M HCl

Remarks

000205

Date Certificate Prepared September 6, 1990

Approval Signature Paul B. Hahn

R sq.: 0.98529 Adj. R sq.: 0.98382 F Test L.O.F.: 0 F Test Reg.: 1

FEB 07 1995

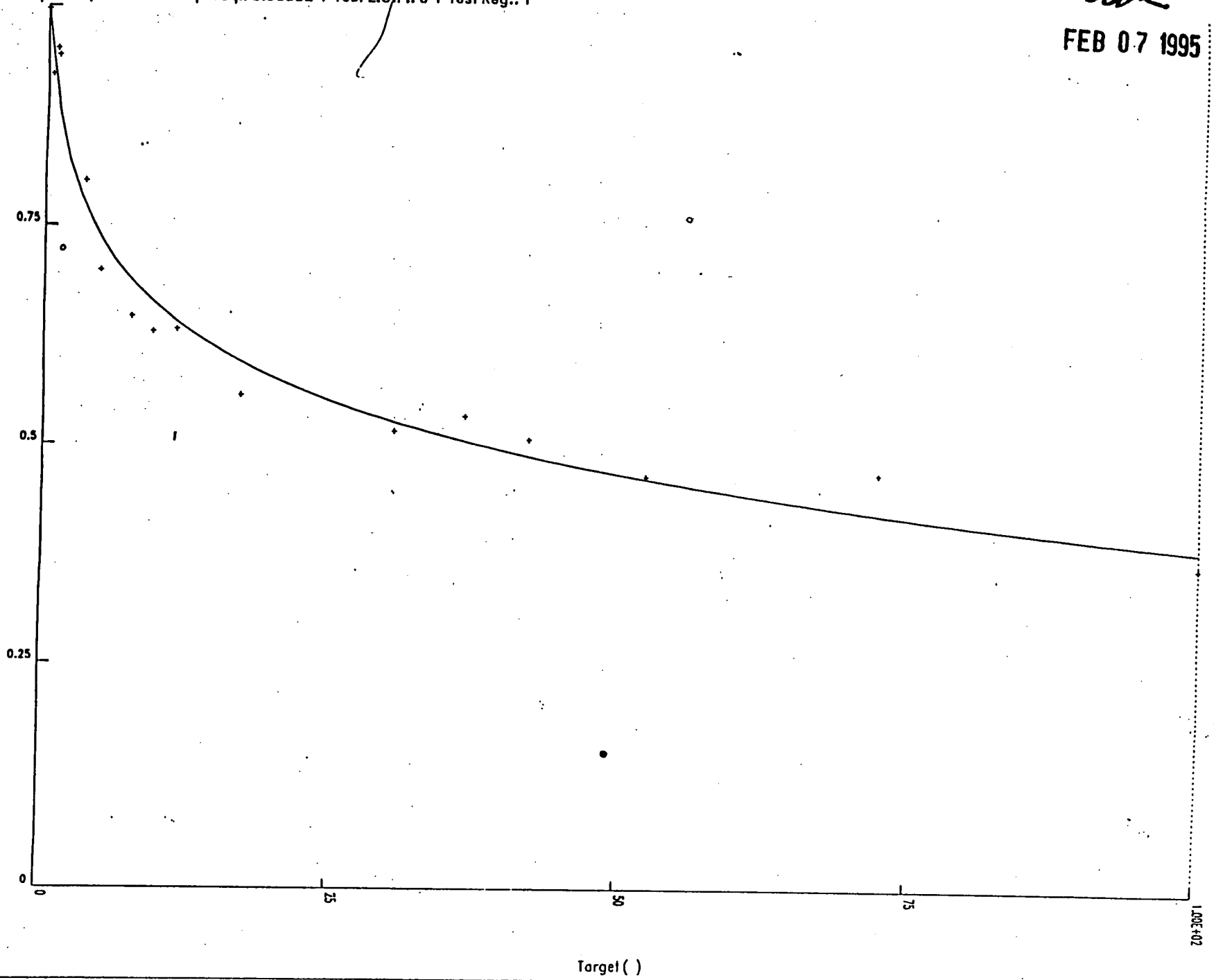

00020C6

6-21194

DataChem Laboratories - Data Analysis Summary

Batch ID: 1993-2878 Analyte: Quartz

FEB 07 1995

Model Type: Nernst a+b*log10(c+x) Model is Weighted.

a: 0.947 b: -0.2795 c: 0.62652

r^2: 0.98529 adjusted r^2: 0.98382 F-Test L.o.F.: 0 F-Test R.: 1

Blank Correction: 0 Scaling: 1

Standards		Target	Response	Calculated	Relative Error	Date acquired Y/M/D
PU-00-A	1	0.00000	1.00000	1.00375	0.00375	1858/11/17
PU-00-B	1	0.00000	1.00000	1.00375	0.00375	1858/11/17
PU-00-C	1	0.00000	1.00000	1.00375	0.00375	1858/11/17
PU-00-D	1	0.00000	1.00000	1.00375	0.00375	1858/11/17
PU-00-E	1	0.00000	1.00000	1.00375	0.00375	1858/11/17
PU-00-F	1	0.00000	1.00000	1.00375	0.00375	1858/11/17
PU-00-G	1	0.00000	1.00000	1.00375	0.00375	1858/11/17
PU-00-H	1	0.00000	1.00000	1.00375	0.00375	1858/11/17
PU-521-02	1	0.41000	0.92720	0.94264	0.01666	1858/11/17
PU-521-01	1	0.81000	0.95580	0.90303	-0.05521	1858/11/17
PU-521-03	1	0.97000	0.94830	0.89021	-0.06125	1858/11/17
PU-520-02	1	3.45000	0.80260	0.77643	-0.03261	1858/11/17
PU-520-03	1	4.85000	0.70270	0.74059	0.05392	1858/11/17
PU-520-04	1	7.65000	0.64910	0.69046	0.06373	1858/11/17
PU-520-05	1	9.51000	0.63200	0.66586	0.05357	1858/11/17
PU-520-06	1	11.53000	0.63500	0.64380	0.01386	1858/11/17
PU-520-07	1	17.15000	0.56000	0.59767	0.06727	1858/11/17
PU-520-08	1	30.37000	0.51940	0.53018	0.02076	1858/11/17
PU-520-09	1	36.50000	0.53720	0.50828	-0.05384	1858/11/17
PU-520-10	1	42.12000	0.51050	0.49117	-0.03787	1858/11/17
PU-520-11	1	52.27000	0.46860	0.46531	-0.00702	1858/11/17
PU-520-12	1	72.25000	0.47230	0.42641	-0.09715	1858/11/17
PU-520-13	1	99.86000	0.36880	0.38742	0.05049	1858/11/17

Tests	Referent	Response	Calculated	Recovery Percent	Date acquired Y/M/D

No Tests Found

Blanks	Response	Calculated	Dilution	Volume	Conversion	Corrected

No Blanks Found

QCs	Response	Calculated	Dilution	Volume	Conversion	Corrected	B.C.

No QCs Found

Samples	Response	Calculated	Dilution	Volume	Conversion	Corrected	B.C.

No Samples Found

Page: 1 User: KERNS Date: 7-FEB-1995 14:42

000007

F-2194

Datachem Laboratories - Data Analysis Summary

Batch ID: 1993-2058 Analyte: ~~Quartz~~ Beta

N = 16

Model Type: Nernst a+b*log10(c+x) Model is Weighted.

a: 0.95053 b: -4.25527E-02 c: 7.25157E-02

r²: 0.83841 adjusted r²: 0.82799 F-Test L.o.F.: 0 F-Test R.: 0

Blank Correction: 0 Scaling: 1

rlk

FEB 09 1995

Standards		Target	Response	Calculated	Relative Error	Date acquired Y/M/D
SR/Y-00-A	1	0.00000	1.00000	0.99903	-0.00097	1858/11/17
SR/Y-00-B	1	0.00000	1.00000	0.99903	-0.00097	1858/11/17
SR/Y-00-C	1	0.00000	1.00000	0.99903	-0.00097	1858/11/17
SR/Y-00-D	1	0.00000	1.00000	0.99903	-0.00097	1858/11/17
SR/Y-00-E	1	0.00000	1.00000	0.99903	-0.00097	1858/11/17
SR/Y-00-F	1	0.00000	1.00000	0.99903	-0.00097	1858/11/17
SR/Y-00-G	1	0.00000	1.00000	0.99903	-0.00097	1858/11/17
SR/Y-00-H	1	0.00000	1.00000	0.99903	-0.00097	1858/11/17
SR/Y-520-01	1	0.45000	0.89890	0.96253	0.07079	1858/11/17
SR/Y-520-02	1	2.51000	0.96620	0.93300	-0.03436	1858/11/17
SR/Y-520-03	1	4.30000	0.90410	0.92327	0.02120	1858/11/17
SR/Y-520-04	1	6.04000	0.92870	0.91708	-0.01251	1858/11/17
SR/Y-520-05	1	7.83000	0.93790	0.91233	-0.02726	1858/11/17
SR/Y-520-06	1	9.75000	0.89830	0.90831	0.01115	1858/11/17
SR/Y-520-08	1	13.43000	0.89000	0.90243	0.01397	1858/11/17
SR/Y-520-09	1	15.60000	0.87120	0.89968	0.03269	1858/11/17
SR/Y-520-10	1	16.87000	0.91730	0.89824	-0.02078	1858/11/17
SR/Y-520-11	1	19.23000	0.92100	0.89583	-0.02733	1858/11/17
SR/Y-512-03	1	19.61000	0.89060	0.89547	0.00547	1858/11/17
SR/Y-513-01	1	25.27000	0.87350	0.89080	0.01980	1858/11/17
SR/Y-512-04	1	27.52000	0.94770	0.88923	-0.06170	1858/11/17
SR/Y-513-02	1	37.63000	0.87700	0.88346	0.00736	1858/11/17
SR/Y-512-05	1	37.65000	0.92720	0.88345	-0.04719	1858/11/17
SR/Y-512-06	1	56.01000	0.85830	0.87612	0.02076	1858/11/17
SR/Y-512-07	1	60.96000	0.89050	0.87455	-0.01791	1858/11/17
SR/Y-512-08	1	66.55000	0.90700	0.87293	-0.03756	1858/11/17
SR/Y-512-09	1	82.52000	0.86990	0.86896	-0.00108	1858/11/17
SR/Y-513-04	1	94.16000	0.85900	0.86653	0.00876	1858/11/17
SR/Y-512-10	1	106.33000	0.86550	0.86428	-0.00141	1858/11/17
SR/Y-513-05	1	106.36000	0.84980	0.86428	0.01704	1858/11/17
SR/Y-512-13	1	164.63000	0.85350	0.85621	0.00317	1858/11/17
SR/Y-512-14	1	188.11000	0.84080	0.85375	0.01540	1858/11/17
SR/Y-512-15	1	202.89999	0.82720	0.85235	0.03040	1858/11/17
SR/Y-512-16	1	213.13000	0.81760	0.85144	0.04139	1858/11/17

Tests	Referent	Response	Calculated	Recovery Percent	Date acquired Y/M/D

No Tests Found

Blanks	Response	Calculated	Dilution	Volume	Conversion	Corrected

No Blanks Found

QCs	Response	Calculated	Dilution	Volume	Conversion	Corrected	B.C.

No QCs Found

Page: 1 User: KERNS Date: 9-FEB-1995 16:13

000308

F-12194

Batch: 1993-2858 Analyte: ~~Gamma~~ Beta
Model: a+b*log10(c+x) a: 0.95053 b: -4.25527E-02 c: 7.25157E-02
R sq.: 0.83841 Adj. R sq.: 0.82799 F Test L.O.F.: 0 F Test Reg.: 0

N = 16

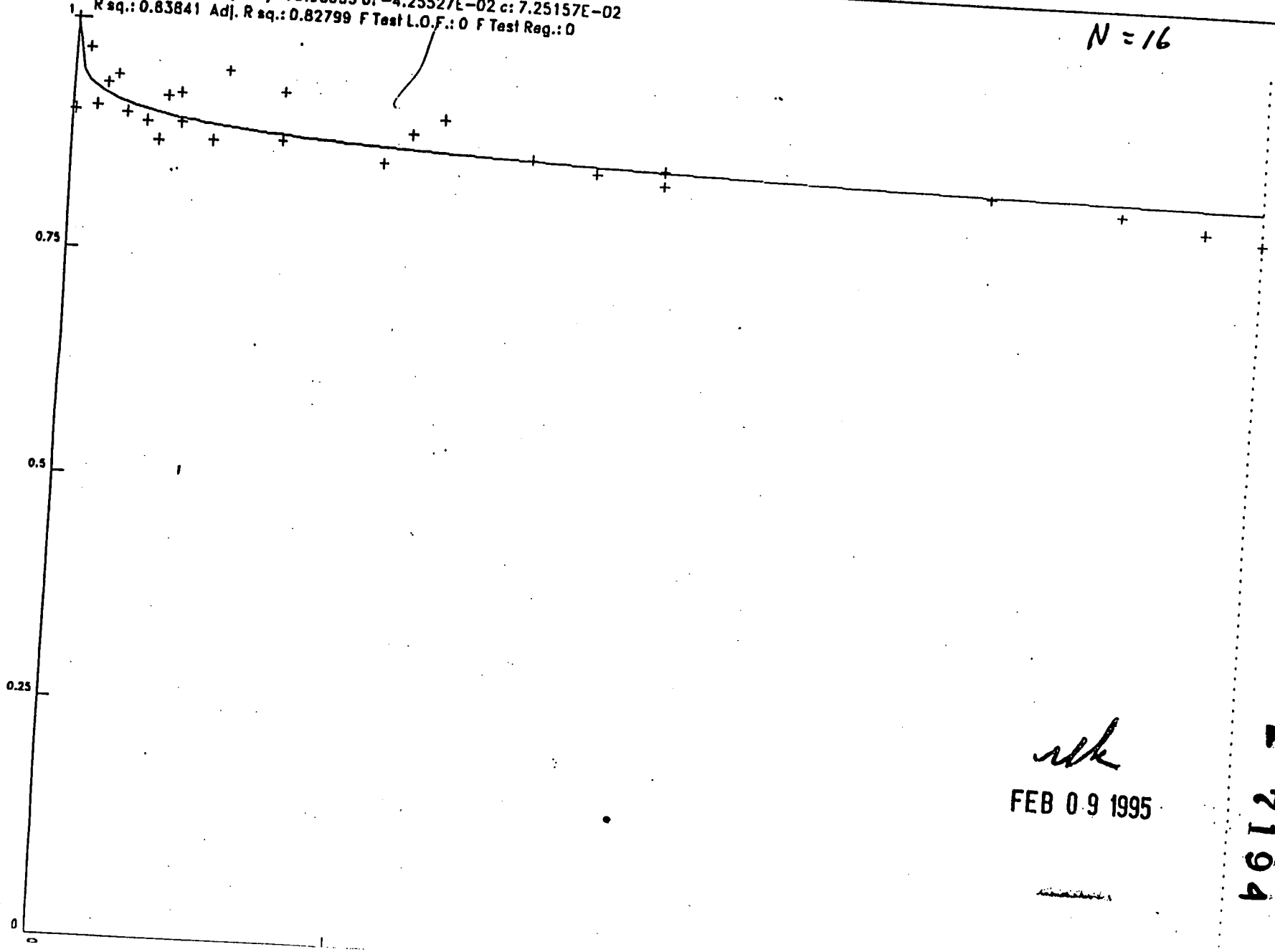

nk

FEB 09 1995

E 7194

000009

APPENDIX C

CALCULATIONS

NOMENCLATURE

A_n = Area of sampling nozzle, ft^2

A_s = Cross-sectional area of stack at sampling site, ft^2

B_{ws} = Proportion water vapor in stack gas by volume

CO = Percent carbon monoxide in stack gas by volume,dry basis, %

CO_2 = Percent carbon dioxide in stack gas by volume, dry basis, %

C_p = Pitot tube coefficient

C_1 = Concentration of filterable particulate in stack gas, gr/dscf

C_2 = Concentration of filterable particulate in stack gas, lb/dscf

C_α = Concentration of alpha particles in stack gas, ρci/dscf

C_β = Concentration of beta particles in stack gas, ρci/dscf

C_{c1} = Concentration of condensible particulate in stack gas, gr/dscf

C_{c2} = Concentration of condensible particulate in stack gas, lb/dscf

C_{U1} = Concentration of uranium in stack gas, mg/m^3

C_{U2} = Concentration of uranium in stack gas, lb/dscf

dia = Diameter of stack, Inches

ER = Filterable particulate emission rate, lb/hr

ER_α = Gross alpha emission rate, ρci/hr

ER_β = Gross beta emission rate, ρci/hr

ER_c = Condensible particulate emission rate, lb/hr

ER_U = Total uranium emission rate, lb/hr

ΔH = Average pressure drop across orifice

%I = Percent isokinetic sampling rate, %

M_d = Molecular weight of stack gas, dry conditions, lb/lb-mole

M_s = Molecular weight of stack gas, stack conditions, lb/lb-mole

Mn = Filterable particulate catch, mg

Mn_α = Gross alpha catch, ρci

Mn_β = Gross beta catch, ρci

Mn_c = Condensible particulate catch, mg

Mn_U = Total Uranium catch, μg

N_2 = Percent nitrogen in stack gas by volume, dry basis, %

O_2 = Percent oxygen in stack gas by volume, dry basis, %

Δp = Average velocity head of stack gas, inches H_2O

$\sqrt{\Delta p}$ = Average square root of velocity head pressure, inches H_2O

P_b = Barometric pressure, inches Hg

P_g = Static pressure of stack gas, inches H_2O

P_s = Absolute stack gas pressure, inches Hg

Q_a = Volumetric stack gas flow rate, stack conditions, acfm

Q_{std} = Volumetric stack gas flow rate, dry standard conditions, dscfm

θ = Elapsed time of test, minutes

T_m = Average dry gas meter temperature, °F

T_s = Average stack gas temperature, °F

V_{lc} = Mass of water collected, g

V_m = Volume of gas measured by dry gas meter, ft^3

V_{mc} = Volume of dry gas meter corrected for leak rate, ft^3

V_{mstd} = Volume of dry gas meter corrected to standard conditions, ft^3

V_{wstd} = Volume of water collected, standard conditions, ft^3

Vs = Stack gas velocity, fps

γ = dry gas meter calibration factor, dimensionless

Note: Standard conditions = 68°F and 29.92 inches Hg.

EXAMPLE CALCULATION RUN # EO-1

1. Volume Metered, Standard Conditions (68°F, 29.92 In Hg)

$$V_{mstd} = (17.647) \times (V_m) \times (Y) \times \frac{(P_b) + \frac{(\Delta H)}{(13.6)}}{(T_m + 460)}$$

$$V_{mstd} = (17.647) \times (164.726) \times (0.999) \times \frac{(29.30) + \frac{(2.80)}{(13.6)}}{(91.2 + 460)} = 155.421$$

2. Molecular Weight of Stack Gas, Dry Conditions

$$M_d = (0.44 \times CO_2) + (0.32 \times O_2) + (0.28 \times (N_2 + CO))$$
$$M_d = (0.44 \times 0.0) + (0.32 \times 21.0) + (0.28 \times 79.0) = 28.84$$

3. Molecular Weight of Stack Gas, Stack Conditions

$$M_s = [M_d \times (1 - B_{ws})] + (18 \times B_{ws})$$
$$M_s = [28.84 \times (1 - 0.050)] + (18 \times 0.050) = 28.30$$

4. Static Pressure, inches H_20

$$Ps = (Pb) + \frac{(Pg)}{(13.6)}$$
$$Ps = (29.30) + \frac{(-0.05)}{(13.6)} = 29.30$$

5. Stack Gas Velocity, fps

$$V_s = (85.49) \times (c_p) \times (\sqrt{\Delta p}) \times \sqrt{\frac{(T_s + 460)}{(P_s) \times (M_s)}}$$

$$V_s = (85.49) \times (0.84) \times (0.212) \times \sqrt{\frac{(124.3 + 460)}{(29.30) \times (28.30)}} = 12.77$$

6. Stack Gas Flow Rate, acfm

$$Q_a = (60)\times(V_s)\times(5.454E-03)\times(Dia)^2$$
$$Q_a = (60)\times(12.77)\times(5.454E-03)\times(10)^2 = 417.9$$

7. Stack Gas Flow Rate, dscf

$$Q_{std} = (17.647)\times(Q_a)\times(1-B_{ws})\times\frac{(P_s)}{(T_s+460)}$$
$$Q_{std} = (17.647)\times(417.9)\times(1-0.050)\times\frac{(29.30)}{(124.3+460)} = 351.2$$

8. Isonkinetic Variation, %

$$\%I = 0.0944\times\frac{(T_s+460)\times(V_{mstd})}{(P_s)\times(V_s)\times(A_n)\times(\theta)\times(1-B_{ws})}$$
$$\%I = 0.0944\times\frac{(124.3+460)\times(155.421)}{(29.30)\times(12.77)\times(1.35E-03)\times(180)\times(1-0.050)} = 99.18$$

9. Filterable Particulate Concentration, gr/dscf

$$C_1 = \frac{(0.0154)\times(Mn)}{(V_{mstd})}$$
$$C_1 = \frac{(0.0154)\times(7.94)}{(155.421)} = 7.87E-04$$

10. Filterable Particulate Concentration, lb,dscf

$$C_2 = (1.429E-04)\times(C_1)$$
$$C_2 = (1.429E-04)\times(7.87E-04) = 1.12E-07$$

11. Filterable Particulate Emission Rate, lb/hr

$$ER = (C_2)\times(Q_{std})\times(60)$$
$$ER = (1.12E-07)\times(351.2)\times(60) = 2.37E-03$$

12. Condensible Particulate Concentration, gr/dscf

$$C_1 = \frac{(0.0154)\times(Mn)}{(V_{mstd})}$$

$$C_1 = \frac{(0.0154)\times(8.80)}{(155.421)} = 8.72E-04$$

13. Condensible Particulate Concentration, lb,dscf

$$C_2 = (1.429E-04)\times(C_1)$$

$$C_2 = (1.429E-04)\times(8.72E-04) = 1.25E-07$$

14. Condensible Particulate Emission Rate, lb/hr

$$ER = (C_2)\times(Q_{std})\times(60)$$

$$ER = (1.25E-07)\times(351.2)\times(60) = 2.63E-03$$

15. Total Uranium Concentration, mg/m^3

$$C_{U_1} = \frac{(Mn_U)}{(V_{mstd})\times(28.316)}$$

$$C_{U_1} = \frac{(1500)}{(155.421)\times(28.316)} = 3.40E-01$$

16. Total Uranium Concentration, lb/dscf

$$C_{U_2} = \frac{(Mn_U)}{(V_{mstd})\times(1.0E+06)\times(453.59)}$$

$$C_{U_2} = \frac{(1500)}{(155.421)\times(1.0E+06)\times(453.59)} = 2.12E-08$$

17. Total Uranium Emission Rate, lb/hr

$$ER_U = (C_{U_2})\times(Q_{std})\times(60)$$

$$ER_U = (2.12E-08)\times(351.2)\times(60) = 4.48E-04$$

18. Gross Alpha Concentration, pci/dscf

$$C_\alpha = \frac{(Mn_\alpha)}{(V_{mstd})}$$

$$C_\alpha = \frac{(4.20)}{(155.421)} = 2.70E-02$$

19. Gross Alpha Emission Rate, pci/hr

$$ER_\alpha = (C_\alpha)\times(Q_{std})\times(60)$$

$$ER_\alpha = (2.70E-02)\times(351.2)\times(60) = 569.5$$

20. Gross Beta Concentration, pci/dscf

$$C_\beta = \frac{(Mn_\beta)}{(V_{mstd})}$$

$$C_\beta = \frac{(2.00)}{(155.421)} = 1.29E-02$$

21. Gross Beta Emission Rate, pci/hr

$$ER_\beta = (C_\beta)\times(Q_{std})\times(60)$$

$$ER_\beta = (1.29E-02)\times(351.2)\times(60) = 271.2$$

CLIENT/PROJECT #:	Fermco A95010
SAMPLE LOCATION:	East Oliver Vacuum Pump Exhaust
DATE/TIME:	5/10/95 0924-1433
RUN #:	EO-1 Filterable Particulate/Total Uranium

STATIC PRESSURE("H2O):	-0.05	"HG	29.30
BAROMETRIC("HG):	29.30		
SAMPLE TIME(min):	180.00	Vm(corr)	164.726
ACTUAL METER VOLUME:	164.726	DSCF	155.421
SQ. ROOT /\P:	0.212		
AVG ORIFICE /\H:	2.80		
AVG STACK TEMP °F:	124.3	°R	584.3
AVG METER TEMP °F:	91.2		
Cp PITOT :	0.84		
NOZZLE DIA.(inches):	0.498	An(ft^2)	1.35E-03
METER GAMMA:	0.999		
LEAK RATE(IF>0.02):			
CIRC STACK? 1=Y,0=N:	1	As(ft^2)	0.55
DIA OR DIM (inches):	10.00		
% O2 :	21.00	DRY MOLE WT	28.84
% CO2 :	0.00	ST MOLE WT	28.30
VOL CONDENSATE(ml):		% H2O	5.00
FILTER GAIN(mg):	-9.00		
RINSE GAIN(mg):	16.94	NET WT(mg)	7.94
ANALYTE #1 :	Uranium		
MOLE WEIGHT:	238.0		
µg/sample :	1500		
PPM :			

********** CALCULATED RESULTS **********

Gas Velocity (Vs):	12.77	FT/SEC
Stack Gas Flow (Qs):	417.9	ACFM
:	351.2	DSCFM
Stack Gas Temp :	124	Deg F
Moisture (H2O):	5.00	%
Isokinetic :	99.18	%

FILTERABLE PARTICULATE SUMMARY

Concentration (Cs):	7.87E-04	Gr/DSCF
:	1.12E-07	lb/DSCF
Emission Rate (Er):	2.37E-03	lb/hr

EMISSION DATA FOR Uranium

Concentration (Cs):	2.12E-08	lb/DSCF
:	3.40E-01	mg/m3
Emission Rate (Er):	4.48E-04	lb/hr

COMMENTS:

CLIENT/PROJECT #:	Fermco A95010
SAMPLE LOCATION:	East Oliver Vacuum Pump Exhaust
DATE/TIME:	5/10/95 0924-1433
RUN #:	EO-1 Condensable Particulate

STATIC PRESSURE("H2O):	-0.05	"HG	29.30
BAROMETRIC("HG):	29.30		
SAMPLE TIME(min):	180.00	Vm(corr)	164.726
ACTUAL METER VOLUME:	164.726	DSCF	155.421
SQ. ROOT /\P:	0.212		
AVG ORIFICE /\H:	2.80		
AVG STACK TEMP °F:	124.3	°R	584.3
AVG METER TEMP °F:	91.2		
Cp PITOT :	0.84		
NOZZLE DIA.(inches):	0.498	An(ft^2)	1.35E-03
METER GAMMA:	0.999		
LEAK RATE(IF>0.02):			
CIRC STACK? 1=Y,0=N:	1	As(ft^2)	0.55
DIA OR DIM (inches):	10.00		
% O2 :	21.00	DRY MOLE WT	28.84
% CO2 :	0.00	ST MOLE WT	28.30
VOL CONDENSATE(ml):		% H2O	5.00
FILTER GAIN(mg):			
RINSE GAIN(mg):	8.80	NET WT(mg)	8.80
ANALYTE #1 :			
MOLE WEIGHT:			
µg/sample :			
PPM :			

********** CALCULATED RESULTS **********

Gas Velocity (Vs):	12.77	FT/SEC
Stack Gas Flow (Qs):	417.9	ACFM
:	351.2	DSCFM
Stack Gas Temp :	124	Deg F
Moisture (H2O):	5.00	%
Isokinetic :	99.18	%

FILTERABLE PARTICULATE SUMMARY

Concentration (Cs):	8.72E-04	Gr/DSCF
:	1.25E-07	lb/DSCF
Emission Rate (Er):	2.63E-03	lb/hr
EMISSION DATA FOR	0	
Concentration (Cs):	NA	lb/DSCF
:	NA	mg/m3
Emission Rate (Er):	NA	lb/hr

COMMENTS:

000219

HAYDEN ENVIRONMENTAL GROUP, INC.

CLIENT/PROJECT #:	Fermco A95010
SAMPLE LOCATION:	East Oliver Vacuum Pump Exhaust
DATE/TIME:	5/10/95 0924-1433
RUN #:	EO-1 Gross Alpha

STATIC PRESSURE("H20):	-0.05	"HG	29.30
BAROMETRIC("HG):	29.30		
SAMPLE TIME(min):	180.00	Vm(corr)	164.726
ACTUAL METER VOLUME:	164.726	DSCF	155.421
SQ. ROOT /\P:	0.212		
AVG ORIFICE /\H:	2.80		
AVG STACK TEMP °F:	124.3	°R	584.3
AVG METER TEMP °F:	91.2		
Cp PITOT :	0.84		
NOZZLE DIA.(inches):	0.498	An(ft^2)	1.35E-03
METER GAMMA:	0.999		
LEAK RATE(IF>0.02):			
CIRC STACK? 1=Y,0=N:	1	As(ft^2)	0.55
DIA OR DIM (inches):	10.00		
% O2 :	21.00	DRY MOLE WT	28.84
% CO2 :	0.00	ST MOLE WT	28.30
VOL CONDENSATE(ml):		% H20	5.00
Gross Alpha (Pci)	4.20		
Gross Alpha Std Dev (pci	0.78	NET WT(mg)	4.98
Gross Beta (pci)	2.00		
Gross Beta std dev (pci)	0.74		

********** CALCULATED RESULTS **********

Gas Velocity (Vs):	12.77	FT/SEC
Stack Gas Flow (Qs):	417.9	ACFM
:	351.2	DSCFM
Stack Gas Temp :	124	Deg F
Moisture (H20):	5.00	%
Isokinetic :	99.18	%

Alpha Particle Summary

Alpha Concentration (Cs)	2.70E-02	pci/DSCF
Alpha Std Dev concentrat	5.02E-03	pci/DSCF
Alpha Emission Rate:	569.5	pci/hr
Alpha Std Dev Emission R	105.8	pci/hr

Beta Particle Summary

Beta Concentration (Cs):	1.29E-02	pci/DSCF
Beta Std Dev concentrati	4.76E-03	pci/DSCF
Beta Emission Rate:	271.2	pci/hr
Beta Std Dev Emission Ra	100.3	pci/hr

COMMENTS:

APPENDIX D

QUALITY ASSURANCE PROCEDURES AND RESULTS

QUALITY ASSURANCE PROCEDURES AND RESULTS

The sampling equipment used in this test series has been calibrated in accordance with procedures outlined in the USEPA Reference Methods for stationary source sampling and also in the Quality Assurance Handbook for Air Pollution Measurement Systems. All pertinent calibration data for the equipment used in this test series are included in this appendix. The following calibration procedures are employed.

a. **Probe-tips (Nozzles)**
Probe-tips are inspected before use to detect damage or irregularities. If the nozzle shows signs of damage, it is repaired and measured before use. The nozzle diameter is determined in the field by measuring three diameters with a precision micrometer. The average of the three measurements is the nozzle diameter.

b. **Pitot Tubes**
The S-type pitot tubes are built to the design specifications cited in Reference Method 2 and are calibrated annually in a wind tunnel. Standard pitot tubes are supplied from the manufacturer with a coefficient of 0.99. The pitot tubes, connecting lines, and manometers are leak-checked in the field before and after each test run.

c. **Thermocouples**
Thermocouples are calibrated upon receipt and annually thereafter. The thermocouples are calibrated at 32°F, ambient temperature, 212°F, and approximately 450°F.

d. **Fyrite Analyzers**
The fyrite analyzers are leak-checked on-site and the reagents are replenished as needed.

e. **Method 5 Control Consoles**
The dry gas meter and the orifice in the Method 5 control consoles are calibrated at six (6) points from 0 to 4 inches of mercury. The dry gas meter coefficient (y-factor) and the orifice constant (Delta H) are established from this calibration. The dry gas meter is calibrated after each test series to confirm the y-factors is used in all sample volume calculations. Hayden Environmental participates in the USEPA Method 5 Dry Gas Meter Inter-Laboratory Performance Audit.

f. **Barometers**
The aneroid field barometers are calibrated with a stationary mercury column barometer prior to each use. The reference barometer is permanently mounted in the Hayden Environmental Laboratory.

APEX INSTRUMENTS
REFERENCE METER CALIBRATION

DGM Serial # 1334637
DATE 3/24/95

Filename A:\DGM_REF.15P\1334637.WK1

Barometric Pressure 29.65
Meter Yw 1.00
K (deg R/inches Hg) 17.64

Time minutes)	Pressure (inches H20)	Dry Gas Meter (DGM) Meter Readings Initial	Final	Volume (cubic feet)	Temperature Initial (degrees F)	Final (degrees F	Wet Test Meter (WTM) Meter Readings Initial	Final	Volume (cubic feet)	Temp (degrees F)	DGM Avg. Temp (degrees R)	WTM Avg. Temp (degrees R)	DGM Coefficient Yd	Coefficient Variation Yd-(Avg.Y
14	-0.70	567.414	572.748	5.334	72	71	304.828	310.226	5.398	68	532	528	1.0208	0.003
15	-0.70	578.182	584.003	5.821	71	70	314.725	320.642	5.917	68	531	528	1.0234	0.006
35	-0.70	584.003	591.749	7.746	70	69	320.642	328.511	7.869	68	530	528	1.0208	0.003
12.5	-1.40	591.749	598.567	6.818	69	68	328.511	335.415	6.904	67	529	527	1.0193	0.002
11.5	-1.40	598.567	604.861	6.294	68	69	335.415	341.795	6.380	67	529	527	1.0204	0.003
10.5	-1.40	604.861	610.592	5.731	69	69	341.795	347.599	5.804	67	529	527	1.0204	0.003
10	-2.40	610.592	618.018	7.426	69	69	347.599	355.091	7.492	67	529	527	1.0191	0.001
9	-2.40	618.018	624.741	6.723	70	70	355.091	361.853	6.762	67	530	527	1.0179	0.000
8	-2.40	624.741	630.729	5.988	70	71	361.853	367.865	6.012	67	531	527	1.0170	-0.001
6.5	-3.70	630.729	636.921	6.192	71	71	367.865	374.058	6.193	67	531	527	1.0174	-0.000
5.5	-3.70	640.641	645.824	5.183	71	71	377.771	382.935	5.164	67	531	527	1.0135	-0.004
6	-3.70	645.824	651.498	5.674	71	71	382.935	388.601	5.666	67	531	527	1.0158	-0.002
5	-5.90	651.498	657.552	6.054	71	71	388.601	394.591	5.990	67	531	527	1.0120	-0.006
5	-5.90	657.552	663.611	6.059	71	72	394.591	400.681	6.090	67	532	527	1.0291	0.011
5	-5.90	663.611	669.650	6.039	72	72	400.681	406.561	5.880	67	532	527	0.9978	-0.020

Avg. Yd= 1.018

I certify that the above Dry Gas Meter was calibrated in accordance with E.P.A. Method 5 , paragraph 7.1 ;CFR 40 Part 60, using the Precision Wet Test Meter # 11AE6, which in turn was calibrated using the American Bell Prover # 3785, certificate # F107, which is traceable to the National Bureau of Standards (N.I.S.T.).

Signature

0003423

2194

Meter Post Test Calibration

Client	FERMCO	P.N.	A95010	Date	6/26/95
Ref. Meter	1334637	Yr	1.018	Pb	29.30
Meter Box	N-3	Pre Test Y	0.9988	▲ H	2.07
Vacumn	2.5	Calib. Time	10		

Performed By: Matt Hayden

Run#	Vr(f-i)	Tr(avg)	Vd(f-i)	Td(avg)	Y
1	7.704	78.0	8.025	96.0	1.005
2	7.605	78.0	7.795	84.8	1.000
3	7.537	78.0	7.756	88.5	1.003
Averages					1.003

$$Y = Y_r * \frac{(V_r) * (T_d + 460) * (Pb)}{(V_d) * (T_r + 460) * (Pb + \frac{\Delta H}{13.6})}$$

000324

HAYDEN ENVIRONMENTAL GROUP, INC.

- 2194

DGM/ORIFICE CALIBRATION

DATE 4/19/95

BAROMETRIC PRESSURE 29.20 in. Hg

CALIBRATOR MATT HAYDEN

METER BOX NO. N-3

REFERENCE METER NO. 1334637

REFERENCE Y 1.018

ORIFICE SETTING in. H_2O	REFERENCE METER		DRY GAS METER			TIME θ min.	VACUUM
	GAS VOLUME V_R ft^3	TEMP. T_R °F	GAS VOLUME V_D ft^3	IN TEMP T_i °F	OUT TEMP T_o °F		
0.5	170.635	65°	332.340	68°	56°	12.4	5" HG
	175.449	66°	337.340	73°	72°		
	4.814	65.5	5.000	67.3			
1.0	047.937	66°	207.613	69°	67°	10	↓
	053.365	65°	213.175	72°	68°		
	5.426	65.5	5.562	69°			
1.5	162.012	65°	323.395	79°F	72°	10	↓
	168.453	65°	330.059	77°	72°		
	6.441 ~~6.442~~	65°	6.664	57°			
2.0	070.561	65°	230.798	76°	69°	10	↓
	078.173	65°	238.563	77°	70°		
	7.612	65°	7.765	73°			
3.0	080.294	65°	240.722	77°	70°	10	↓
	089.633	65°	250.175	77°	71°		
	9.339	65°	9.453	73.75			
4.0	150.356	65°	311.418	74°	72°	10	↓
	160.999	65°	322.333	79°	72°		
	11.643	65°	10.915	73.5			

HAYDEN

Meter Box #	N-3	N-3	N-3
Date	4/19/95	4/19/95	4/19/95
Reference Meter #	1334637	1334637	1334637
Y Reference	1.018	1.018	1.018
Barometric Pressure	29.2	29.2	29.2
Orifice Setting ^ H (" H20)	0.5	1	1.5
Total Gas Volume Reference	4.814	5.428	6.44
Average Temperature Reference	65.5	65.5	69
Total Gas Volume Dry Gas Meter	5	5.562	6.664
Average Temperature Dry Gas Meter	67.3	69	75
Time (min)	12.4	10	10
Vacumn	5	5	5

****** Calculations **********

Meter Box Y	0.9823	0.9976	0.9912
Meter Box ^ H@	1.886	1.923	2.054

Meter Box #	N-3	N-3	N-3
Date	4/19/95	4/19/95	34808
Reference Meter #	1334637	1334637	1334637
Y Reference	1.018	1.018	1.018
Barometric Pressure	29.2	29.2	29.2
Orifice Setting ^ H (" H20)	2	3	4
Total Gas Volume Reference	7.612	9.339	10.643
Average Temperature Reference	65	65	65
Total Gas Volume Dry Gas Meter	7.765	9.453	10.915
Average Temperature Dry Gas Meter	73	73.75	73.5
Time (min)	10	10	10
Vacumn	5	5	5

****** Calculations **********

Meter Box Y	1.0081	1.0148	0.9986
Meter Box ^ H@	1.938	1.928	1.981

Average Y	0.99876
Average delta H	1.95167

Meter Box Field Check

Meter Box #: N-3

Y: 1.019

delta H: 1.832

Date: 3/30/95

Calibrator: MH

Leak Check: O.K.

Barometric: 29.31 "MERC.

Run No.	Initial Volume	Final Volume	Net Volume	Initial Temp.	Final Temp.	Avg. Temp.	Y_c Comparison
1	995.505	002.680	7.175	55/52	66/61	58.5	0.988 < 1.046 < 1.049
2	003.259	010.594	7.335	66/61	64/58	62.25	0.988 < 1.0278 < 1.049
3	010.594	017.925	7.331	64/58	66/60	62.00	0.988 < 1.0280 < 1.049

$$y_c = \frac{10}{Vm} \times \sqrt{\frac{(0.0319) \times (Tm)}{(Pb)}}$$

.7512

Compare with Y_c

$0.97 * Y < Y_c < 1.03 * Y$

$0.97 * Y =$ 0.9886

$1.03 * Y =$ 1.0497

1 → 0.988 1.049 Yc 1.046

2 → " " Yc = 1.0278

1.046

0.7539

0.7537

HAYDEN ENVIRONMENTAL GROUP, INC.

2290000

P. 2194

THERMOCOUPLE CALIBRATION

THERMOCOUPLE I.D.: SN LENGTH: _____ DATE: 4-19-95

CALIBRATED BY: JL

REFERENCE THERMOMETER: Fisher Scientific 1498370

Source	Reference Thermometer Temperature °F	Test Thermocouple Temperature °F	Temperature Difference °F	Thermocouple Simulator *Display*	Thermocouple Simulator *Setting*
Ambient Air	61°	61°	0°	100°	100°
Boiling Oil	389°	389°	0°	501°	500°
Boiling H_2O	212°	212°	0°	301°	300°
ice H_2O	34°	36°	0°	1°	0°

THERMOCOUPLE CALIBRATION

THERMOCOUPLE I.D.: I-1 LENGTH: _____ DATE: 4-24-95

CALIBRATED BY: JA

REFERENCE THERMOMETER: Fisher Scientific 17938 7D

Source	Reference Thermometer Temperature °F	Test Thermocouple Temperature °F	Temperature Difference °F	Thermocouple Simulator *Display*	Thermocouple Simulator *Setting*
Ambient Air	60°	61°	1°	99°	100°
ice Bath H_2O	35°	36°	1°	1°	0°