7412 R-041-209.1

TRANSMITTAL OF FINAL REPORT FOR REMOVAL ACTION NO. 30

12/06/95

DOE-0290-96
DOE-FN EPAS
500
FIN REPORT

Attachment V

7412

Department of Energy
Fernald Environmental Management Project
P. O. Box 398705
Cincinnati, Ohio 45239-8705
(513) 648-3155

DEC 0 6 1995

DOE-0290-96

Mr. James A. Saric, Remedial Project Manager
U.S. Environmental Protection Agency
Region V - 5HRE-8J
77 West Jackson Blvd.
Chicago, IL 69604-3590

Mr. Thomas P. Schneider
Ohio Environmental Protection Agency
401 E. Fifth Street
Dayton, OH 45402-2911

Dear Mr. Saric and Mr. Schneider:

TRANSMITTAL OF FINAL REPORT FOR REMOVAL ACTION NO. 30

The Department of Energy, Fernald Area Office (DOE-FN) is pleased to submit the Final Report for Removal Action No. 30, Seepage Control at the South Field and Inactive Flyash Pile. Submittal of this document by December 8, 1995, is an identified milestone in the Removal Action No. 30 Work Plan.

This final report summarizes the work related to reducing impacts to the Great Miami Aquifer (GMA) for contaminated seepage from the South Field and Inactive Flyash Pile, and infiltration through sediment at the southeast corner of the South Field. This report also outlines the monitoring and reporting of the operation until final remediation of the South Field and Inactive Flyash Pile.

If you have any questions, please contact Rod Warner at (513) 648-3156.

Sincerely,

Susan M Peterman
for Johnny Reising
Fernald Remedial Action
Project Manager

FN:Jalovec

Enclosure: As Stated

000001

Recycled and Recyclable

cc w/enc:

G. Jablonowski, U.S. EPA, Region V
M. Proffitt, OEPA-Dayton

cc w/o enc:

J. Patterson, EM-423, GTN
L. Parsons, DOE-OH
R. Warner, DOE-FN
S. Pearce, BA&H
S. Garland, FERMCO, 52-2
J. Jenkins, FERMCO, 52-2
G. Jones, FERMCO, 52-2
U. Kumthekar, FERMCO, 52-2
C. Little, FERMCO, 2
P. Norman, FERMCO, 52-2
N. Weatherup, FERMCO, 52-2
M. Yates, FERMCO, 9
AR Coordinator, FERMCO

7412

OPERABLE UNIT 2

REMOVAL ACTION NO. 30
SEEPAGE CONTROL AT THE SOUTH FIELD AND INACTIVE FLYASH PILE

FERNALD ENVIRONMENTAL MANAGEMENT PROJECT

FINAL REPORT

NOVEMBER 1995

U.S. DEPARTMENT OF ENERGY
FERNALD AREA OFFICE

000003

2502-RA-0001

7412

FERNALD ENVIRONMENTAL MANAGEMENT PROJECT

FINAL REPORT

REMOVAL ACTION NO. 30: SEEPAGE CONTROL AT THE SOUTH FIELD AND INACTIVE FLYASH PILE

November 1995

Prepared by

Fernald Environmental Restoration Management Corporation

000004

Table of Contents

REMOVAL ACTION NO. 30
SEEPAGE CONTROL AT THE SOUTH FIELD
AND INACTIVE FLYASH PILE
FINAL REPORT

TABLE OF CONTENTS

Page

List of Figures ii

Acronyms and Abbreviations iii

Executive Summary ES-1

1.0 Introduction 1.0

2.0 Background 2-1
- 2.1 Description of Project Area 2-1
  - 2.1.1 South Field 2-1
  - 2.1.2 Inactive Flyash Pile 2-1
- 2.2 Summary of the Potential Threat 2-2

3.0 Description of Removal Action Activities 3-1
- 3.1 System Design 3-1
- 3.2 Construction 3-2
- 3.3 Waste Management 3-2
- 3.4 Startup Operations 3-4
- 3.5 Operation and Maintenance 3-4
- 3.6 As-Built Drawings 3-4

4.0 Health and Safety 4-1

5.0 Quality Assurance 5-1

6.0 Cost 6-1

7.0 Conclusions 7-1

ATTACHMENTS

I. Sediment Removal Report
II. Startup Plan
III. Operation and Maintenance Plan
IV. Acceptance Documents
V. As Built Drawings

LIST OF FIGURES

Figure 2-1 FEMP Site Map 2-3

Figure 2-2 Site Plan - Approximate Seep Locations and Sediment Removal Area, South Field and Flyash Piles 2-4

Figure 2-3 Site Plan - Seepage Collection System and Removal of Sediment 2-5

LIST OF TABLES

Table 6-1 Inactive Flyash Pile/South Field Seep Control Total FY 95 Cost 6-2

000006

Acronyms

ACRONYMS AND ABBREVIATIONS

AWWT	Advanced Wastewater Treatment
CERCLA	Comprehensive Environmental Response, Compensation, and Liability Act
CFR	Code of Federal Regulations
DOE	United States Department of Energy
EPA	United States Environmental Protection Agency
FEMP	Fernald Environmental Management Project
FMPC	Feed Materials Production Center
FS	Feasibility Study
GMA	Great Miami Aquifer
MCL	maximum contaminant level
NCP	National Oil and Hazardous Substances Pollution Contingency Plan (commonly known as the National Contingency Plan)
NEPA	National Environmental Policy Act of 1970
O&M	operations and maintenance
OEPA	Ohio Environmental Protection Agency
RCRA	Resource Conservation and Recovery Act
RI	Remedial Investigation
RI/FS	Remedial Investigation/Feasibility Study
ROD	Record of Decision
RSE	removal site evaluation
RvA	Removal Action
RvAWP	Removal Action Work Plan
SARA	Superfund Amendments and Reauthorization Act of 1986

UNITS OF MEASUREMENT

g	gram
kg	kilogram
L	liter
m^3	cubic meters
μg	microgram
mg	milligram
mrem	millirem
ppm	parts per million
pCi	picoCurie
ppb	parts per billion

000007

Executive Summary

EXECUTIVE SUMMARY

Removal Action No. 30, "Seepage Control at the South Field and Inactive Flyash Pile" was implemented to reduce impacts on the Great Miami Aquifer (GMA) from contaminated seepage from the South Field (SF) and Inactive Flyash Pile (IFP) and infiltration through sediment at the southeast corner of the SF (see the following Action Memorandum issued by letter, DOE-0069-95, 25 October 1994).

This removal action achieved two goals:

- Collection of contaminated seepage in the drainage ditches along the SF and IFP.
- Removal of sediment from the southeast corner of the SF to preclude infiltration and potential contamination of the GMA.

In general, seepage is collected in sumps by perforated subdrains in drainage ditches and pumped to existing holding Tank No. 155 at the Advanced Wastewater Treatment System (AWWT) for treatment.

Contaminated sediment was removed from the southeast corner of the SF and transported to an Operable Unit 5 controlled stockpile near the existing stormwater retention basins. Specific details of the seepage collection system(s) and sediment removal are contained herein.

7412

DOCUMENT FILE NO. 4252

Department of Energy
Fernald Environmental Management Project
P. O. Box 398705
Cincinnati, Ohio 45239-8705
(513) 648-3155

103.1

DOE-0069-95

Mr. Don Ofte, President
Fernald Environmental Restoration
Management Corporation
P.O. Box 538704
Cincinnati, Ohio 45253-8704

Dear Mr. Ofte:

ACTION MEMORANDUM: SOUTHFIELD AND INACTIVE FLYASH SEEPAGE CONTROL

The enclosed Removal Site Evaluation for the Southfield and Inactive Flyash Pile Seepage Control area has been reviewed by my office. Based on this review, the Department of Energy, Fernald Area Office (DOE-FN) has determined that this project constitutes a time-critical removal action. The Administrative Record file for the removal action should include this document.

The Fernald Environmental Restoration Management Corporation (FERMCO) should proceed with completion of the necessary actions to prepare a Removal Action Work Plan (RAWP). The RAWP should address the controls required to prevent seepage and infiltration in this area from transporting contaminants into the Great Miami Aquifer. The Work Plan should be transmitted to DOE-FN within sixty (60) days from the receipt of this Removal Action Memorandum.

If you or your staff have any questions, please contact Jay Jalovec at (513) 648-3122. Thank for your time and cooperation in this matter.

Sincerely,

Glenn Griffith
for J. R. Craig
Acting Director

FN:Jalovec

Enclosure: As Stated

cc w/enc:

J. A. Saric, U.S. EPA
T. A. Schneider, OEPA

cc w/o enc:

R. Warner, DOE-FN
N. S. Weatherup, FERMCO/51-2
G. N. Jones, FERMCO/51-2
G. T. Becker, MTC/45

1.0

1.0 INTRODUCTION

As a result of the Operable Unit 2 Remedial Investigation (RI) program, it was found that seepage in drainage ditches on the western edge of the Inactive Flyash Pile and northern and eastern edges of the South Field were contaminated and migrating directly to the Great Miami Aquifer (GMA) through infiltration. In addition, contaminated sediments were washed into a depression at the base of the SF which sits over the GMA. The sediment was also in contact with the pooled surface water.

A Removal Site Evaluation (RSE) was completed in October 1994 under authority delegated by Executive Order 12580 under Section 104 of CERCLA and consistent with Section 300.410 of the National Contingency Plan (NCP).

DOE reviewed the RSE and issued an Action Memorandum directing FERMCO to prepare a Removal Action Work Plan (RvAWP). This was the inception of Removal Action No. 30 (RvA No. 30), Seepage Control at the South Field (SF) and Inactive Flyash Pile (IFP).

2.0

1.0 INTRODUCTION

As a result of the Operable Unit 2 Remedial Investigation (RI) program, it was found that seepage in drainage ditches on the western edge of the Inactive Flyash Pile and northern and eastern edges of the South Field were contaminated and migrating directly to the Great Miami Aquifer (GMA) through infiltration. In addition, contaminated sediments were washed into a depression at the base of the SF which sits over the GMA. The sediment was also in contact with the pooled surface water.

A Removal Site Evaluation (RSE) was completed in October 1994 under authority delegated by Executive Order 12580 under Section 104 of CERCLA and consistent with Section 300.410 of the National Contingency Plan (NCP).

DOE reviewed the RSE and issued an Action Memorandum directing FERMCO to prepare a Removal Action Work Plan (RvAWP). This was the inception of Removal Action No. 30 (RvA No. 30), Seepage Control at the South Field (SF) and Inactive Flyash Pile (IFP).

2.0 BACKGROUND

2.1 DESCRIPTION OF PROJECT AREA

The SF and IFP are subunits within Operable Unit 2 (OU2) at the Fernald Environmental Management Project (FEMP) and are located about 2000 feet southwest of the former Production Area as shown in Figure 2-1. The SF and the IFP are contiguous and there is no defined physical boundary between the two subunits.

2.1.1 South Field

The SF is located between the IFP and the Active Flyash Pile and covers an area of approximately 11 acres. It is bounded by the IFP on the west, and by gravel roads on all other sides. Currently, the SF is relatively flat except along its winding southern boundary where it slopes sharply downward toward the gravel road. The SF is covered with grasses, shrubs, and trees.

The SF was not an engineered disposal facility; its operational history is neither well documented nor well understood. As noted in the OU2 Remedial Investigation report (RI), disposal may have been initiated in 1954 and continued until the mid-1960s. Disposal appears to have taken place in a random manner. The SF was reportedly used as a burial site for FEMP nonprocess wastes such as flyash, on-site construction/demolition rubble, and soils that may have contained low levels of radioactivity.

2.1.2 Inactive Flyash Pile

The IFP is located immediately west of the SF and covers an area of approximately 3 acres. Paddys Run and a tributary drainage ditch form the western boundary; a gravel road runs along the north; and the SF forms the eastern boundary. In appearance, the IFP resembles a relatively steep hill covered with shrubs and trees. The soil covering the southern half of the IFP is of unknown origin.

Like the SF, the operational history of the IFP is not well understood. Much of the waste material in the pile is reported to be bottom ash and flyash from the facility's boiler plant operations, but approximately 40% of the pile is soil. As reported in the OU2 RI, the ash appears to have been taken by truck to an existing slope near Paddys Run and dumped. Ash disposal at this subunit appears to have ceased by the mid-1960s. Various other wastes, including building rubble, gravel, asphalt, and

process waste, were also deposited at the IFP. Site plans of approximate seep locations and sediment removal area as well as the Seepage Collection System are shown in Figures 2-2 and 2-3, respectively.

2.2 SUMMARY OF THE POTENTIAL THREAT

The OU2 RI (DOE, November 1994) identified water seeping from fill material at the SF and IFP into the perimeter drainage ditches at these subunits. As discussed in the RSE, total uranium concentrations in surface water near the seeps range from 110 to 540 μg/L at the SF and from 23 to 910 μg/L at the IFP. As water travels downstream in these perimeter ditches, it enters areas where the sands of the GMA outcrop. Samples from the sediment in the SF and IFP drainage ditches indicate that typical concentrations of uranium range from 15 to 30 μg/g in the SF and from 5 to 12.3 μg/g in the IFP. Uranium concentrations in groundwater downgradient of the GMA outcropping are greater than 300 μg/L in the SF and 1800 μg/L in the IFP. The proposed drinking water standard for concentrations of uranium is 20 ppb. The analytical data suggests that the seeps from the IFP and SF are contributing to total uranium contamination in the GMA that exceeds the proposed regulatory limit for drinking water. The impact to groundwater is one to two orders of magnitude above the proposed drinking water standard. The range of detected concentrations of total uranium in the IFP and SF wastes is 1.05 to 3,580 μg/g. The large volume of waste and the high concentrations of uranium indicate that the release of uranium through seepage and contaminated sediments could continue at the present concentration until the subunits are remediated.

In accordance with Section 40 CFR 300.415 (b) (2), the applicable factors for determining the appropriateness of a removal action to address this potential threat are presented in the table below.

Factor	Explanation
Actual or potential exposure to nearby human populations, animals, or the food chain from hazardous substances or pollutants or contaminants	The contaminated seepage drains into Paddys Run and areas that recharge the GMA. This results in the potential for human consumption of the groundwater as well as direct contact by wildlife.
Actual or potential contamination of drinking water supplies or sensitive ecosystems	The contaminated seepage drains to areas that recharge the GMA.
Weather conditions that may cause hazardous substances or pollutants or contaminants to migrate or be released	Wet weather leads to the development of the seepage.

000012

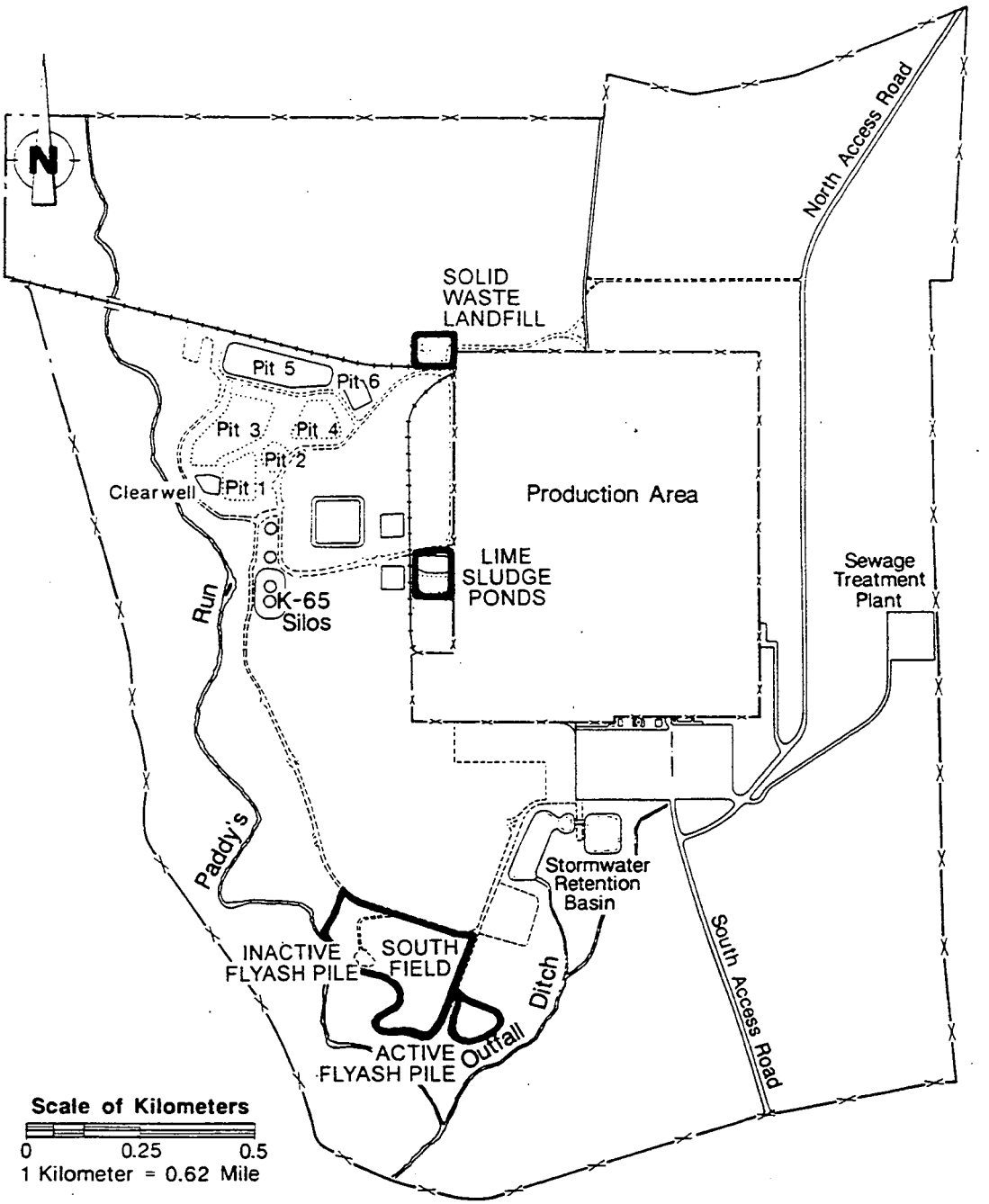

LEGEND

- Location of Operable Unit 2 Subunits
- Covered Pit
- Fence
- Railroad Spur
- Roadway

Figure 2-1:FEMP Site Map

GRAPHICS #2617

3.0

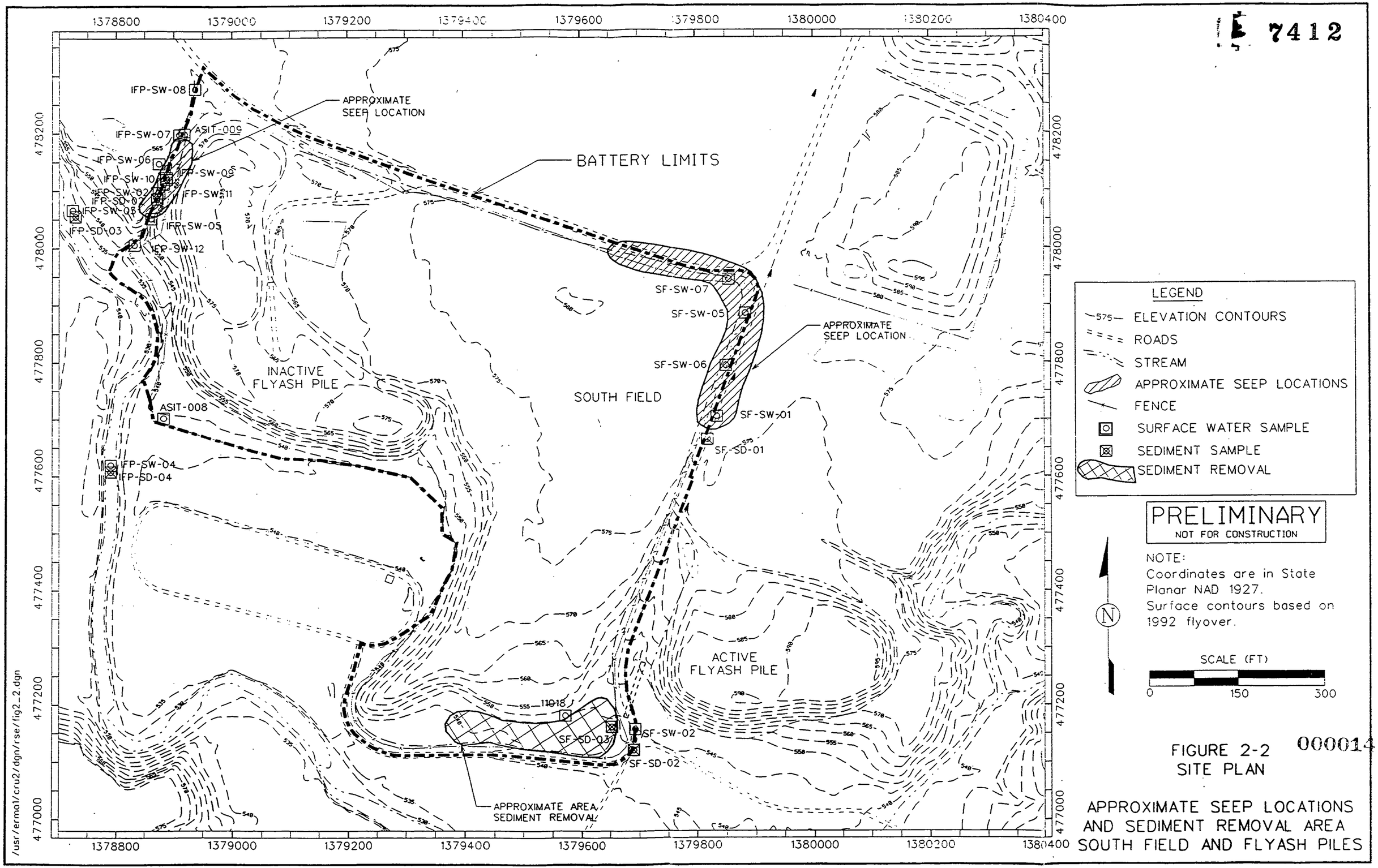

FIGURE 2-2
SITE PLAN

000014

APPROXIMATE SEEP LOCATIONS AND SEDIMENT REMOVAL AREA SOUTH FIELD AND FLYASH PILES

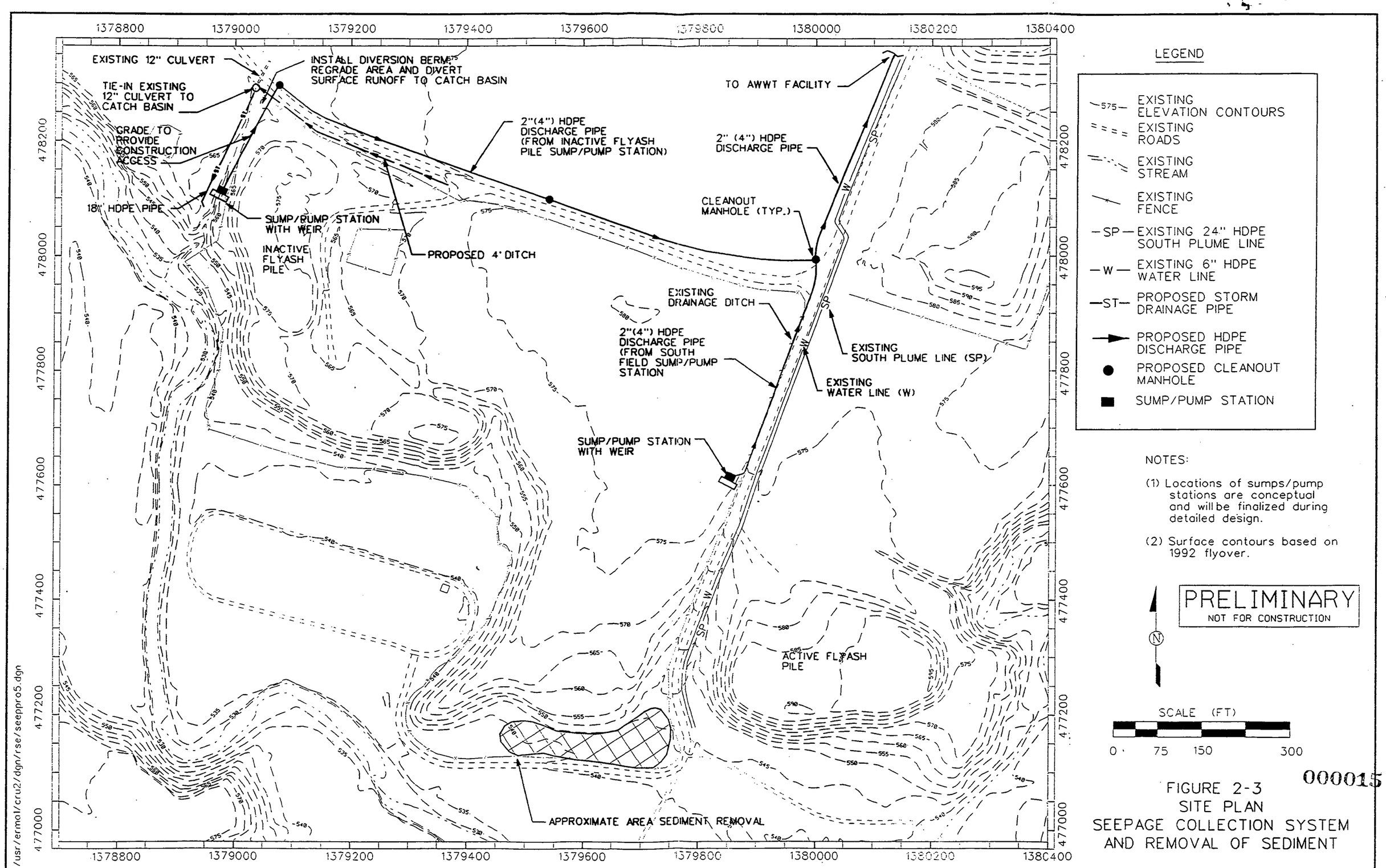

000015

FIGURE 2-3
SITE PLAN
SEEPAGE COLLECTION SYSTEM
AND REMOVAL OF SEDIMENT

3.0 DESCRIPTION OF REMOVAL ACTION

3.1 DESCRIPTION OF REMOVAL ACTION ACTIVITIES

3.1 SYSTEM DESIGN

The Seepage Collection System consists of the following:

- East and West Pump Stations: Each pump station consists of a High-Density Polyethylene (HDPE) manhole; an 8-inch, perforated inlet pipe laid at the bottom of the ditch, connected to a 4-inch HDPE solid pipe leading to the sump; a 4-inch overflow pipe (the overflow pipe is screened to stop animal entry); and a 25 gallons per minutes (gpm) submersible centrifugal grinder pump with level controls.

- Clean Out Manholes (COMHs): Six COMHs are provided at an approximate spacing of 500 feet. Each COMH is provided with a 2-inch gate valve and a 2-inch threaded nipple for draining the static head during service. In COMH No. 3, where the discharge lines from the East and West Pump Stations join, two check valves are provided to prevent wastewater flowing into the opposite sump while only one pump is running.

- Meter manhole: A meter manhole is provided near Tank No. 155 of the Advanced Wastewater Treatment (AWWT) facility, where the discharge line changes from underground to aboveground. This meter manhole houses a flow rate transmitter and manual shut-off valves on either side of the meter. Flow rate including totalization is transmitted via a 4-20 m.a. signal to the AWWT control room. A 2-inch gate valve is provided for draining the line and cleanout. A 1/2-inch globe valve is provided to collect samples for periodic analysis of seepage.

- Pumps: Each pump station is designed for an average flow of 25 gpm. The pump is water-level activated. The pump is activated by a high-level control and deactivated by a low-level control or overflow level control. During rainfall events that produce flow rates greater than 25 gpm, runoff will overflow the diversion berm and drain downstream into the existing ditches. The pumps will shut off when the water reaches the pump station overflow level, and water inside the sump will drain out through the 4-inch overflow pipe. The pump is rail-mounted so that it can be lifted in and out of the sump for service and repair.

- Effluent line: The seepage water collected in each sump is pumped to the AWWT Facility (Tank No. 155) through a 2-inch HDPE pipe. This 2-inch HDPE pipe is contained in a 4-inch HDPE pipe buried at about a 36-inch minimum depth. At the meter manhole the discharge line becomes an above-grade line and continues on a pipe rack to the top of Tank No. 155. The above-grade portion of the line is made of 2-inch carbon steel (CS) carrier pipe and a 4-inch CS container pipe. The above-grade container pipe is heat-traced and insulated.

In addition to the seepage collection system described above, sediment which had been deposited near the southeastern corner of the SF was removed and transported to an Operable Unit 5 stockpile. The sediment area was identified, monitored by a radiation technologist, and marked in the field. Removal of sediment/soil and flyash ranged from six inches to approximately 12 inches in depth and was observed by a CRU2 geologist. Approximately 350 cubic yards of material were removed. The Sediment Removal Report is included as Attachment I.

3.2 CONSTRUCTION

A Pre-Construction Kick-Off Meeting was held on April 25, 1995 to review the Certified for Construction (CFC) documents and project scope. Attendees represented FERMCO Construction Division, including their subcontractor Wise Construction Services. Other FERMCO divisions represented were CRU2 Engineering, Environmental Safety and Health, Quality Assurance, Waste Management, and Radiological Engineering. The Engineering Design Firm, Parsons, was also represented.

Subsequent weekly construction progress meetings were held to determine construction status, work planned for the current and following week, resolve construction issues, information needed, Field Change Request (FCR), and/or Design Change Notice (DCN) status, requisition/procurement status, and construction schedule.

The final Construction Progress Meeting was held August 8, 1995 and included a review of the Start-Up Plan and Operation and Maintenance Plan. Construction was completed and the seepage collection system was operational on August 16, 1995.

Conditional and Final Acceptance documents are included as Attachment IV.

3.3 WASTE MANAGEMENT

Waste generated by this Removal Action were of five general types - excess soil from excavations, debris from excavations, excess construction material and construction wastes, debris from clearing and grubbing, and disposable PPE. Disposition of these materials were as follows:

000017

Excess Soil. Excess soil including sediment excavated from the southeast corner of the SF plus any 3/1excavated soils remaining after installation of the sumps/pump stations, pipelines, and manholes, and associated grading operations were disposed in the Operable Unit 5 Category I stockpile immediately south of the Storm Water Retention Basins. Category I encompasses material that does not contain hazardous components and does not exceed the radiological parameters of 100 pCi/g uranium, 50 pCi/g thorium, and 5 pCi/g radium. Placement of the Operable Unit 2 material within an Operable Unit 5 stockpile is a deviation from procedures currently presented in the Removal Action 17 work plan, which states that "Each OU will establish a controlled stockpile." At this point in the ongoing cleanup of the FEMP, EPA approved an exception to Removal Action 17 for the following reasons:

- The FEMP is well into the RI/FS process. Radiologically-based cleanup levels that have been identified for soils within the OU2 and OU5 feasibility studies are frequently below the Category I cutoffs. Hence, any soil in such a stockpile cannot be considered to be acceptable to be left in place unless it has been characterized to have radiological levels below the proposed cleanup levels. Therefore, placement of the OU2 material in the proposed location will not jeopardize any future disposition options for the material in that stockpile.

- The potential concerns about mixing wastes from different OUs, which led to the statement quoted above, no longer apply because the proposed remediation of Category I soils is consistent between OUs 2 and 5 (i.e., disposal in an on-site disposal facility).

The Sediment Removal Report is included as Attachment I. Approximately 350 cubic yards of sediment were disposed at the OU5 stockpile. Erosion and sediment controls including seeding and mulching were also completed at the OU5 stockpile.

Debris from Excavations. Debris from excavations includes any non-soil material excavated during installation of the sumps/pump stations, pipelines, and manholes. The locations of the excavations for this project did not encounter this type of material.

Excess Construction/Material/Construction Wastes. There were no contaminated construction wastes generated during the project necessitating containers for disposal. Excess 3-1/C 500 KCMIL aluminum aerial cable (approximately 700 feet) was stockpiled for future FEMP construction activities.

Debris from Clearing and Grubbing. Debris consisting of trees and shrubs that were removed during site preparation activities were placed within the controlled area of the SF and IFP for future disposition to the on-site disposal facility.

Disposable PPE. Personal protective equipment materials were containerized and handled with other such waste generated at the FEMP.

3.4 START-UP OPERATIONS

Normal start-up of the Seepage Collection System was completed and witnessed on August 16, 1995 which met the schedule outlined in the RvA No. 30 Work Plan. Documentation of the normal start-up and complete start-up plan are included as Attachment II.

3.5 OPERATION AND MAINTENANCE

The Operation and Maintenance Plan (O&M) was reviewed with the Facility Owner (RSO) during the final design and construction progress meeting. The O&M Plan is included as Attachment III.

During the operation and maintenance of the removal action, U.S. EPA shall be provided with annual reports that indicate:

- the volume of wastewater pumped each month from the SF and IFP to the AWWT,
- results from quarterly sampling the wastewater pumped, and
- the approximate volume of sediment removed from the sumps.

These reports shall be submitted within 60 days of each year of operation. The "operational" start date was August 16, 1995.

3.6 AS-BUILT DRAWINGS

FERMCO Construction Division was responsible for keeping "red line" construction drawings in the field which documented as-built conditions including FCRs and DCNs.

These "red lines" were transmitted to Parsons at construction completion to prepare as-builts. Copies of the as-built drawings are included as Attachment V.

000019

4.0

4.0 HEALTH AND SAFETY

Removal Action 30 was performed in accordance with the FEMP site-wide health and safety program and the Project Specific Health and Safety Plan. The Project Specific Health and Safety Plan identified, evaluated, and controlled safety and health hazards, and was consistent with 29 CFR 1910.120.

Radiological control was included as part of the Project Specific Health and Safety Plan. Radiological control technicians monitored the work areas and equipment on a daily basis. All construction equipment met the criteria of DOE Radiological Control Manual (DOE/EH-0264T) for fixed and removable contamination. No equipment washing was required.

5.0

5.0 QUALITY ASSURANCE

In compliance with 10 CFR 830.120, the implementation of Removal Action 30 was governed by RM-0012, "Quality Assurance Program," Revision 3, Effective Date November 30, 1994.

The Quality Assurance Program (QAP) establishes the quality assurance requirements for FERMCO and all other contractor and subcontractor organizations performing work at the FEMP.

Personnel from the Quality Assurance Division monitored the work during design, construction, and startup operations, to ensure conformance with the QAP. Quality Overview Reports were issued by the Construction Division.

6.0

6.0 COST

The cost for Removal Action No. 30, was approximately $965,000 as shown in the following Table 6-1. Approximately $2,400 was expended in September of FY 1994.

The ultimate cost of the project was well below the $1.8 million originally budgeted. The original budget estimate was based on a more extensive interception system than that which was chosen after the analysis of alternative. Also, the budget relied on assumptions about radiological contamination and soil removal quantities that proved to be conservative in comparison to actual field conditions. This added up to a total savings in excess of $800,000.

The costs above included engineering by Parsons, Construction labor through Wise Services, FERMCO labor, teaming partner labor, construction material costs, and other miscellaneous costs. These do not include future costs for operation and maintenance of the Seepage Collection System by the facility owner.

TABLE 6-1

INACTIVE FLYASH PILE/SOUTH FIELD SEEPAGE CONTROL TOTAL FY 95 COST

Object Class	Description	
111	Top Level & Engineering Managers	$2,036.49
112	Manufacturing Managers	22,760.02
113	Non-Engineering Managers	14,052.60
121	Junior Engineer	22,629.40
122	Senior Engineer	482.80
123	Junior Technical Support Prof.	13,350.94
124	Senior Technical Support Prof.	2,500.55
125	Junior Non-Technical Support Prof.	3,056.35
126	Senior Non-Technical Support Prof.	558.51
131	Technicians	5,248.93
151	Secretarial	200.79
152	General Clerks	287.41
161	Crafts	10.65
172	Equipment Operators	5.44
181	General Laborers	0.37
191	Security Police Officers	211.30
310	Maintenance Matl and Supplies	17.88
325	Tools and Metal Fabrication	124.43
330	Safety Clothing and Equipment	226.40
363	Construction Materials	193,300.23
388	Freight	613.16
389	Misc. Tools and Elec Suppl	292.85
394	Sales Tax	8,347.40
399	Misc Supplies and Expense	5,504.20
405	Rentals and Leases	41,517.55
420	Subcontracts (not maint)	1,457.87
425	Subcont.-Routine Analysis	13.96
429	Ralph M. Parsons	142,495.30
433	Construction Subcontracts	4,850.00
451	Wise Construction	345,000.00
452	Jacobs, Field Support	12,416.00
454	Halliburton NUS, Field Support	320.00
459	Fluor Daniel, Home Office Support	2,321.32
460	Temporaries	6,931.63
465	FERMSI Labor	97,741.39
692	FEMP Commuter Mileage	39.00
990	Dist of G&A	12,886.62
	TOTAL:	$963,809.76

000023

7.0

7.0 CONCLUSIONS

Based on operation and performance since normal startup of the Seepage Collection System on August 16, 1995, RvA No. 30 has been successful. In addition, the removal of approximately 350 cubic yards of contaminated sediment from the SF has precluded potential contamination of the GMA from this source.

Operation and Maintenance of the Seepage Collection System, along with annually reporting the volume and characteristics of the wastewater (seepage) treated by AWWT, will enable FERMCO to validate RvA No. 30, prior to full scale remediation of the SF and IFP.

Attachment I

ATTACHMENT I

SEDIMENT REMOVAL REPORT

7412

Fernald Environmental

FERMCO

Restoration Management Corporation

INTEROFFICE MEMORANDUM

To:	Uday Kumthekar	**Date:**	July 31, 1995
Location:	Fernald	**Reference:**	
From:	John Berretz JB	**FERMCO #:**	M:CRU2:95-0101
Location:	Fernald	**Client:**	DOE DE-AC24-92OR21972
Extension:	648-4620	**Subject:**	**REMOVAL OF SEDIMENT AS PART OF REMOVAL ACTION NO. 30**

c: File Record Storage Copy 106.4.16

As part of the Seepage Control Removal Action No. 30, potentially contaminated sediment/soil has been removed to mitigate the potential of contaminant migration. This activity was conducted in the southeastern part of the South field (477200 northing, 1379500 easting, NAD 27). To determine the completeness of sediment/soil removal, a CRU2 geologist observed the excavated area on July 19, 1995. The following observations were noted:

1. The removed sediment/soil was a combination of sediment/soil and flyash;

2. The thickness of the sediment/soil and flyash removed ranged from 6 inches to approximately 12 inches;

3. The area excavated was approximately 80 feet wide north to south, and 250 feet long east to west;

4. The sediment/soil and flyash was removed until it was determined that the alluvium, which overlays the Great Miami Aquifer, had been reached;

5. The alluvium primarily consisted of sandy silt; and,

6. The removed sediment/soil and flyash (approximately 350 cubic yards) were hauled to the OU5 controlled storage area.

After subsequent grading, the exposed surface will be seeded and covered with straw for erosion control.

JJB:tdo

7412

Fernald Environmental
FERMCO
Restoration Management Corporation

INTEROFFICE MEMORANDUM

To:	Uday Kumthekar, MS51-2	**Date:**	August 2, 1995
Location:	Fernald	**Reference:**	N/A
From:	Jim Turner JTT	**FERMCO #:**	M:QA(SPM):95-0120
Location:	Fernald	**Client:**	DOE DE-AC24-92OR21972
Extension:	648-4941	**Subject:**	Removal Action 30, Seepage Control and Sediment Removal: Sediment Removal Quality Assurance

c: File Record Storage Copy 106.4.4.2
Steve Reutcke, MS81-1, Springdale
Frank Thompson, MS10, Fernald
Vern Turner, MS10, Fernald
Brinley Varchol, MS43, Fernald
Dave Vigus, MS10, Fernald
B. Scott Wheeler, MS43, Fernald

CRU2 has executed the portion of Removal Action 30 (RA30) that comprises the Sediment Removal part of the action. Quality Assurance has supported the Sediment Removal part of RA30 by observing the following:

- Reviewing the limits of sediment removal. The limits do not correspond exactly to print, but appropriate controls were taken (i.e., involvement of CRU2 geologist and staking out of area of sediment removal) to maintain the scope of the removal within proper bounds.
- Reviewing erosion and sediment controls; no discrepancies noted.
- Inspecting the sediment removal area for presence of sediment after the removal was complete. No gross sediment deposits were noted.
- Observing dust control activities - no discrepancies noted.
- Reviewing the sediment disposal site - it was marked.
- Final cover was not observed; however, the project plans to complete final cover actions in September, when conditions for grass growth are optimal. This activity will be a punch list item for the end of the project.

Fernald Environmental
FERMCO
Restoration Management Corporation

INTEROFFICE MEMORANDUM

Questions concerning this report may be addressed to myself, Dave Vigus (phone 648-4935), or Scott Wheeler (phone 648-4949)

JTT

000028

1650.508-166.3.49.

FEMP RADIOLOGICAL SURVEY REPORT COVER SHEET

SURVEY NUMBER: 7412
95-07-G4-21

DATE: 7-5-95	LOCATION: SEEPAGE AREA	RCT [redacted]	BADGE: 72763	PAGE: 1 OF 2
TIME 0630 1700	LEVEL: 580'	SIGN [redacted]		
FEMP WORK PERMIT NUMBER: 21348		REVIEWER [redacted]	BADGE: 7719	
RWP NUMBER: N/A		SIGNATURE [redacted]	DATE: 7-8-95	

ATTACHMENTS: 1 ASR

REASON FOR SURVEY: SURVEY EXCAVATED SOIL FOR POTENTIAL CONTAMINATION IN THE SEEPAGE AREA

SUMMARY: Sediment Control Area

000029

NO.	DISTRIBUTION OF COPIES
1	DOCUMENT CONTROL
2	FILES

SUPERVISOR NOTIFIED	TIME	DATE	NOTIFIED BY:
N/A	N	N	N/A

FEMP
RADIOLOGICAL SURVEY REPORT

SURVEY NUMBER: 95-07-64-21

DATE:	RCT NAME:	RCT BADGE #:	PAGE:
7-5-95	[redacted]	72763	2 OF 2
REVIEWED BY [redacted]		REVIEWER BADGE NO: 7715	

MODEL	SERIAL NUMBER	TYPE (α, β, γ)	CALIBRATION -DUE DATE	BKGD. (cpm)	EFF./CF	COUNT TIME (min)	MDA (dpm)	INSP./ PERFORMANCE TEST SAT? YES	NO
M-3	77117	βγ	5-95	51	4/30	N/A	40k/300k	✓	

ITEM NUMBER	LOCATION AND/OR DESCRIPTION	HEIGHT (FT.)	DPM/100cm² ALPHA REMOVABLE (1)	DPM/100cm² ALPHA FIXED PLUS REMOVABLE	DPM/100cm² BETA-GAMMA REMOVABLE (1)	DPM/100cm² BETA-GAMMA FIXED PLUS REMOVABLE	CORRECTED DOSE RATE (MREM/HR) γ CONTACT	β CONTACT	γ AT __ FT.	β AT __ FT.
1	VARIOUS LOCATIONS	N/A	N/A	N/A	N/A	<MDCR	N/A	N/A	N/A	N/A
2	EXCAVATION OF									
3	SOIL IN THE									
4	SEEPAGE AREA									
5										
6										
7										
8										
9										
10										

N/A

000030

Note (1): Values identified by an asterisk (*) indicate results are less than the calculated MDA (RC-RDA-010).

FS-F-1993-1 (REV. 04/18/95)

1650.508-166.3.49. ——

7412

FEMP RADIOLOGICAL SURVEY REPORT COVER SHEET

SURVEY NUMBER: 95-07-64-42

DATE: 7-6-95	LOCATION: SEEPAGE AREA	RCT: [redacted]	BADGE: 72763	PAGE: 1 OF 2
TIME: 0630 1704	LEVEL: ≈ 588'	SIGNATURE: [redacted]		
FEMP WORK PERMIT NUMBER: 21348		REVIEWER: [redacted]	BADGE: 7719	
RWP NUMBER: N/A		SIGNATURE: [redacted]	DATE: 7-8-95	

ATTACHMENTS: 1

RSA

N/A

N/A

REASON FOR SURVEY: SURVEY SOIL EXCAVATIONS FOR POTENTIAL CONTAMINATION AT VARIOUS LOCATIONS OF THE SEEPAGE AREA

N/A

SUMMARY:

N/A

000031

NO.	DISTRIBUTION OF COPIES
1	DOCUMENT CONTROL
2	FILES

SUPERVISOR NOTIFIED	TIME	DATE	NOTIFIED BY:
← N/A →	N/A	N/A	← N/A →

FEMP
RADIOLOGICAL SURVEY REPORT

SURVEY NUMBER: 95-07-G4-42

DATE: 7-6-95	RCT NAME: [redacted]	RCT BADGE #: 72763	PAGE: 2 OF 2
REVIEWED BY: [redacted]		REVIEWER BADGE NO: 7715	

MODEL	SERIAL NUMBER	TYPE (α, β, γ)	CALIBRATION -DUE DATE	BKGD. (cpm)	EFF./CF	COUNT TIME (min)	MDA (dpm)	INSP./ PERFORMANCE TEST SAT? YES	NO
M-3	77117	BX	9-95	40	4/30	N/A	40/3000	✓	

ITEM NUMBER	LOCATION AND/OR DESCRIPTION	HEIGHT (FT.)	DPM/100cm² ALPHA REMOVABLE (1)	DPM/100cm² ALPHA FIXED PLUS REMOVABLE	DPM/100cm² BETA-GAMMA REMOVABLE (1)	DPM/100cm² BETA-GAMMA FIXED PLUS REMOVABLE	CORRECTED DOSE RATE (MREM/HR) γ CONTACT	β CONTACT	γ AT __ FT.	β AT __ FT.
1	VARIOUS LOCATIONS of	N/A	N/A	N/A	N/A	SMEAR	N/A	N/A	N/A	N/A
2	SEEPAGE AREA SOIL									
3	EXCAVATIONS									
4										
5										
6										
7										
8										
9										
10										

N A

000032

Note (1): Values identified by an asterisk (*) indicate results are less than the calculated MDA (RC-RDA-01C).

FS-F-1993-1 (REV. 04/18/95)

COPY

FEMP	RADIOLOGICAL SURVEY REPORT COVER SHEET	SURVEY NUMBER: 95-07-64-160	7412

DATE:	LOCATION:	[redacted]	BADGE:	PAGE:
7-13-95	SEEPAGE AREA		72763	1 OF 2
TIME: 1300-1700	LEVEL: ≈ 580'	SIGNA[redacted]		
WORK PERMIT NUMBER: N/A		REVIEWER: [redacted]	BADGE: 7719	
RWP NUMBER: N/A		SIGNATUR[redacted]	DATE: 7-17-95	

ATTACHMENTS:		
1	RSR	
	N/A	N/A

REASON FOR SURVEY	SURVEY SOIL EXCAVATIONS FOR POTENTIAL CONTAMINATION AT VARIOUS LOCATIONS OF THE SEEPAGE AREA.
	N/A

SUMMARY:

N/A

000033

No.	Distribution of Copies
1	Radiological Records
2	Files

Supervisor Notified	Time	Date	Notified by:
← N/A →	N	A	← N/A —

FS-F-1993-0 (REV 04/18/95)

FEMP
RADIOLOGICAL SURVEY REPORT

SURVEY NUMBER: 95-07-G4-160

DATE: 7-13-95	RCT NAME: [redacted]	RCT BADGE #: 72763	PAGE: 2 OF [redacted]
REVIEWED BY [redacted]		REVIEWER BADGE NO: 7719	

MODEL	SERIAL NUMBER	TYPE (α, β, γ)	CALIBRATION DUE DATE	BKGD. (cpm)	EFF./CF	COUNT TIME (min)	MDA (dpm)	INSP / PERFORMANCE TEST SAT? YES	NO
M-3	77117	βγ	9-95	40 CPM	4/30	N/A	400/3000	✓	

ITEM NUMBER	LOCATION AND/OR DESCRIPTION	HEIGHT (FT.)	DPM/100cm² ALPHA REMOVABLE (1)	DPM/100cm² ALPHA FIXED PLUS REMOVABLE	DPM/100cm² BETA-GAMMA REMOVABLE (1)	DPM/100cm² BETA-GAMMA FIXED PLUS REMOVABLE	CORRECTED DOSE RATE (MREM/HR) γ CONTACT	β CONTACT	γ AT __ FT.	β AT __ FT.
1	VARIOUS LOCATIONS	N/A	N/A	N/A	N/A	<MDCR	N/A	N/A	N/A	N/A
2	OF SEEPAGE AREA	↓	↓	↓	↓	↓	↓	↓	↓	↓
3										
4										
5										
6										
7										
8										
9										
10	↓	↓	↓	↓	↓	↓	↓	↓	↓	↓

Note (1): Values identified by an asterisk (*) indicate results are less than the calculated MDA (RC-RDA-010).

000034

FS-F-1993-1 (REV 04/18/95)

1650.508-166.3.49.

7412

FEMP	RADIOLOGICAL SURVEY REPORT COVER SHEET		SURVEY NUMBER: 95-07-G4-161	
DATE: 7-13-95	LOCATION: SEEPAGE AREA	RCT: [redacted]	BADGE: 72763	PAGE: 1 OF 3
TIME: 08:00	LEVEL: < 580'	SIGNAT[redacted]		
WORK PERMIT NUMBER: 31214		REVIEWER: [redacted]	BADGE: 7719	
RWP NUMBER: N/A		SIGNATURE [redacted]	DATE: 7-14-95	

ATTACHMENTS:	
2	RSR SPECIAL REPORT FORM ← N/A →

N/A

REASON FOR SURVEY	PRE-RWP SURVEY THE SOUTHEAST MOST PORTION OF THE SOUTH FIELD FOR POTENTIAL CONTAMINATION AND FOR REMOVAL OF ~ 18" OF SOIL FROM RUN-OFF DEPOSITED FROM THE ACTIVE FLYASH PILE

SUMMARY:

N/A

000035

No.	Distribution of Copies
1	Radiological Records
2	Files

Supervisor Notified	Time	Date	Notified by:
N/A			

SUMMARY AND/OR SPECIAL REPORT FORM

Location: SEE PAGE AREA {SOUTH FIELD / SOUTHEAST PORTION}	Date: 7-13-95
Document Title: PRE-RWP SURVEY	Serial Number: 95-07-64-16[redacted]

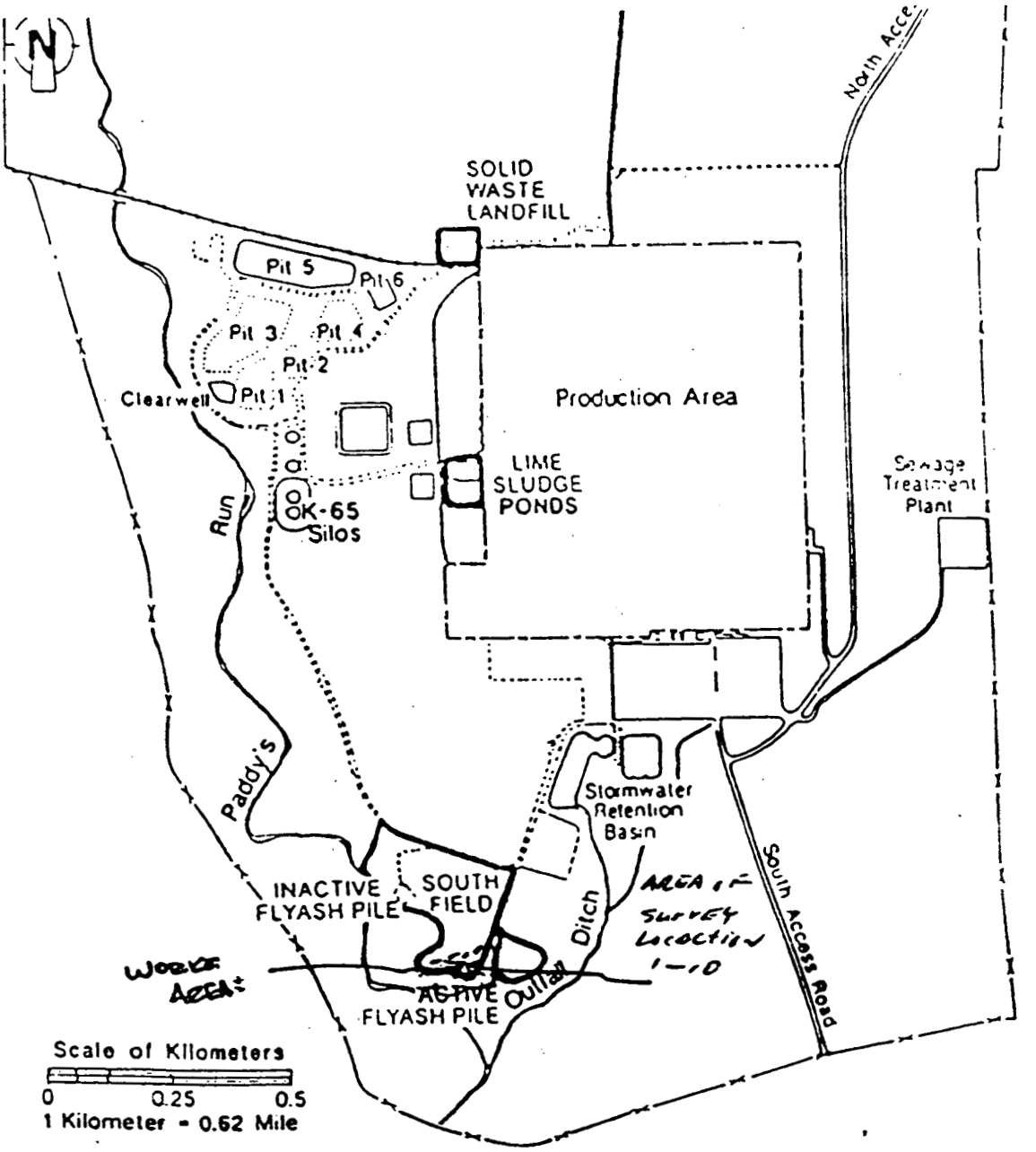

LEGEND

- Location of Operable Unit 2 Subunits
- Covered Pit
- Railroad Spur
- Fence
- Roadway

000036

Entered by:	Reviewed by:
(Print Name) [redacted]	(Print Name) [redacted]
[redacted] 7-13-95	(Signature/Date) [redacted] 7-14-95

FEMP
RADIOLOGICAL SURVEY REPORT

7412

SURVEY NUMBER: 95-07-04-161

DATE: 7-13-95	RCT NAME: [redacted]	RCT BADGE #: 72763	PAGE: 3 OF 3
REVIEWED BY: [redacted]		REVIEWER BADGE NO: 7719	

MODEL	SERIAL NUMBER	TYPE (α, β, γ)	CALIBRATION -DUE DATE	BKGD. (cpm)	EFF./CF	COUNT TIME (min)	MDA (dpm)	INSP./PERFORMANCE TEST SAT? YES	NO
M-3	77117	βγ	9-95	40 cpm	4/30	N/A	400/3000	✓	
RO-3C	416	βγ	9-95	.2	N/A	N/A	.2		

N/A

ITEM NUMBER	LOCATION AND/OR DESCRIPTION	HEIGHT (FT.)	DPM/100cm² ALPHA REMOVABLE (1)	DPM/100cm² ALPHA FIXED PLUS REMOVABLE	DPM/100cm² BETA-GAMMA REMOVABLE (1)	DPM/100cm² BETA-GAMMA FIXED PLUS REMOVABLE	CORRECTED DOSE RATE (MREM/HR) γ CONTACT	β CONTACT	γ AT __ FT.	β AT __ FT.
1	SOUTHEAST MOST	GROUND LEVEL	N/A	N/A	N/A	<MDCR	<.2	<.2	N/A	N/A
2	Portion of "South									
3	FIELD"									
4										
5										
6										
7										
8										
9										
10										

N/A

Note (1): Values identified by an asterisk (*) indicate results are less than the calculated MDA (RC-RDA-010).

FS-F-1993-1 (REV. 04/12/95)

000037 P

1650.508-166.3.49.

FEMP	RADIOLOGICAL SURVEY REPORT COVER SHEET		SURVEY NUMBER: 95-07-G4-209	
DATE: 7-17-95	LOCATION: SEEPAGE AREA	[redacted]	BADGE: 72763	PA[redacted] 1 OF 3
TIME: 0630 (70)	LEVEL: < 580'	SIGNA[redacted]		
WORK PERMIT NUMBER: 31214		REVIEWER [redacted]	BADGE: 7719	
RWP NUMBER: 595-07-613-360		SIGNATURE: [redacted]	DATE: 7-19-95	

ATTACHMENTS:	
2	RSR
	SRF
	<- N/A ->

REASON FOR SURVEY	
	Survey Soil Excavations for Potential Contamination
	N/A

SUMMARY:

N/A

000038

No.	Distribution of Copies
1	Radiological Records
2	Files

Supervisor Notified	Time	Date	Notified by:
N/A			

Location: SEEPAGE AREA

Date: 7-17-95

Document Title: Survey of Soil Excavation

Serial Number: 95-07-64-209

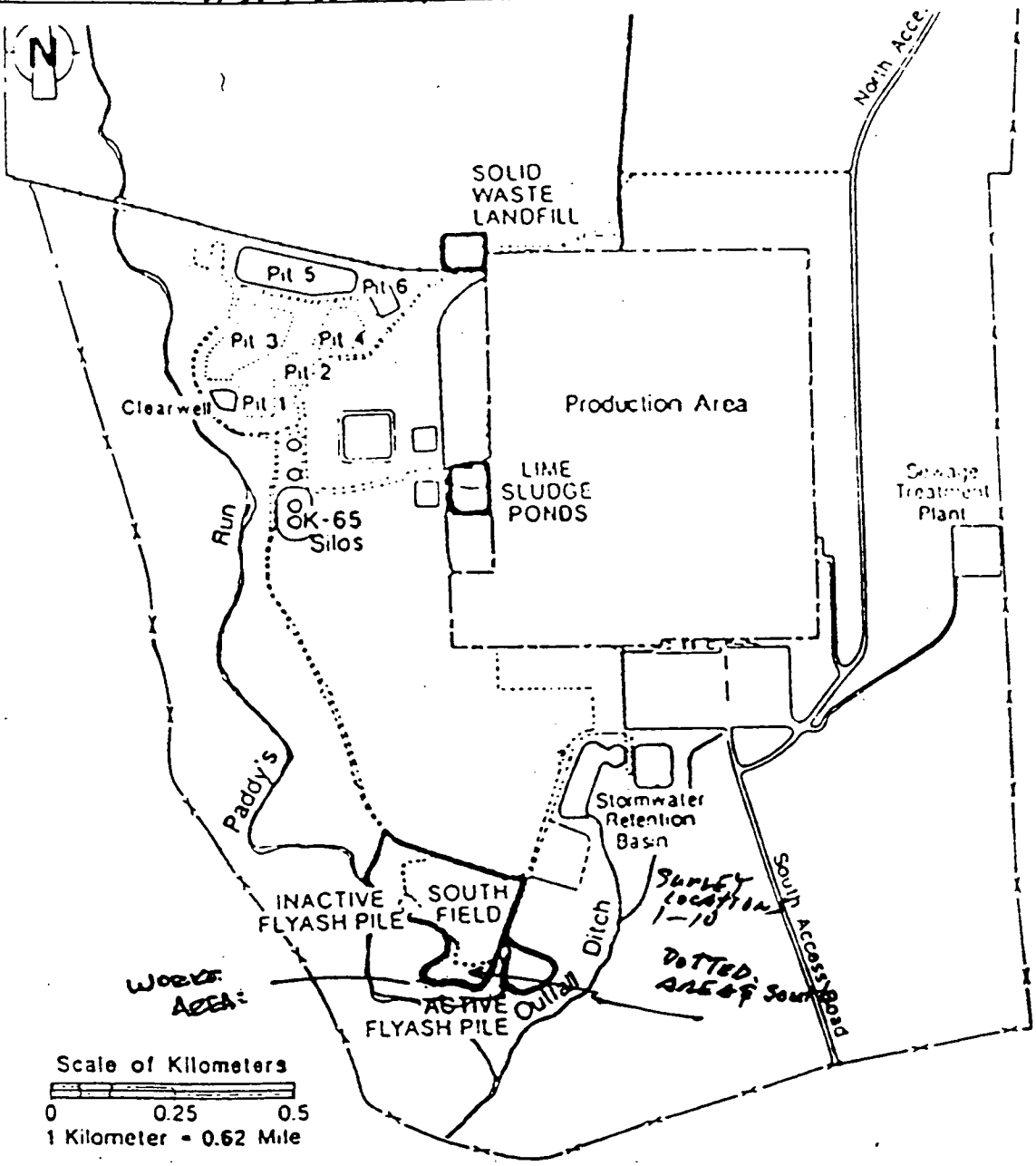

LEGEND

- Location of Operable Unit 2 Subunits
- Covered Pit
- Railroad Spur
- Fence
- Roadway

000039

Entered by:	Reviewed by:
(Print Name) [redacted]	(Print Name) [redacted]
(Signature/Date) [redacted] 7-17-95	(Signature/Date) [redacted] 7-19-95

FEMP
RADIOLOGICAL SURVEY REPORT

SURVEY NUMBER: 95-07-64-209

DATE: 7-17-95	RCT NAME: [redacted]	RCT BADGE #: 72763	PAGE: 3 OF 3
REVIEWED BY: [redacted]		REVIEWER BADGE NO: 7719	

MODEL	SERIAL NUMBER	TYPE (α, β, γ)	CALIBRATION -DUE DATE	BKGD. (cpm)	EFF./CF	COUNT TIME (min)	MDA (dpm)	INSP./ PERFORMANCE TEST SAT? YES	NO
M-3	77117	βγ	9-95	40 CPM	4/30	N/A	400/300	✓	

ITEM NUMBER	LOCATION AND/OR DESCRIPTION	HEIGHT (FT.)	DPM/100cm² ALPHA REMOVABLE (1)	DPM/100cm² ALPHA FIXED PLUS REMOVABLE	DPM/100cm² BETA-GAMMA REMOVABLE (1)	DPM/100cm² BETA-GAMMA FIXED PLUS REMOVABLE	CORRECTED DOSE RATE (MREM/HR) γ CONTACT	β CONTACT	γ AT __ FT.	β AT __ FT.
1	SURVEY of SOIL	GROUND	N/A	N/A	N/A	<MDC	N/A	N/A	N/A	N/A
2	EXCAVATIONS of THE									
3	SOUTHEAST most portion									
4	of SOUTH FIELD "									
5										
6										
7										
8										
9										
10										

000040

Note (1): Values identified by an asterisk (*) indicate results are less than the calculated MDA (RC-RDA-010).

FS-F-1993-1 (REV. 04/18/95)

COPY

7412

1650.508-166.3.49.

FEMP	RADIOLOGICAL SURVEY REPORT COVER SHEET		SURVEY NUMBER: 95-07-GK-223	
DATE: 7-18-95	LOCATION: SEEPAGE AREA	RCT: [redacted]	BADGE: 72763	PAGE: 1 OF 2
TIME: 0630-1700	LEVEL: < 580'	SIGN [redacted]		
WORK PERMIT NUMBER: N/A		REVIEWER: [redacted]	BADGE: 7719	
RWP NUMBER: N/A		SIGNATURE: [redacted]	DATE: 7-19-95	

ATTACHMENTS:		
1.	LSR	N/A
	N/A	N/A

REASON FOR SURVEY	
	Survey Soil Excavations for Potential Contamination.
	N/A

SUMMARY:

N/A

000041

No.	Distribution of Copies
1	Radiological Records
2	Files

Supervisor Notified	Time	Date	Notified by:
N/A	N	N	N/A

FEMP
RADIOLOGICAL SURVEY REPORT
CONTINUATION SHEET

SURVEY NUMBER 95-07-04-22

DATE: 7-18-95	RCT NAME: [redacted]	RCT BADGE NO: 72263	PAGE:
REVIEWED BY: [redacted]		REVIEWER BADGE NO: 7719	2 OF 2

ITEM NUMBER	LOCATION AND/OR DESCRIPTION	HEIGHT (FT.)	DPM/100cm² ALPHA		DPM/100cm² BETA-GAMMA		CORRECTED DOSE RATE (MREM/HR)			
			REMOVABLE (1)	FIXED PLUS REMOVABLE	REMOVABLE (1)	FIXED PLUS REMOVABLE	γ CONTACT	β CONTACT	γ AT __ FT.	β AT __ FT
1	VARIOUS LOCATIONS	GROUND LEVEL	N/A	N/A	N/A	<MDC	N/A	N/A	N/A	N/A
2	of THE "SOUTH FIELD"									
3	& EXCAVATIONS OF									
4	THE SEEPAGE AREA									
5										
6										
7										
8										
9										
10										

000042

Note (1): Values identified by an asterisk (*) indicate results are less than the calculated MDA (RC-RDA-010).

1650.508-166.3.49. ____

7412

FEMP	RADIOLOGICAL SURVEY REPORT COVER SHEET		SURVEY NUMBER: 95-07-64-341	
[redacted] 26-95	LOCATION: SEEPAGE AREA	RCT: [redacted]	BADGE: 72763	PAGE: 1 OF 4
TIME: 09:00	LEVEL: < 500'	SIGNATURE: [redacted]		
WORK PERMIT NUMBER: 21348		REVIEWER: [redacted]	BADGE: 7395	
RWP NUMBER: 95-07-613-360		[redacted]	DATE: 7/26/95	

ATTACHMENTS:		
3	RSR	N/A
	SPECIAL REPORT FORM #1	
	SPECIAL REPORT FORM #2	

REASON FOR SURVEY	
	COMPLETION OF FLYASH REMOVAL.
	N/A

SUMMARY:

N/A

COPY

000043

No.	Distribution of Copies
1	Radiological Records
2	Files

Supervisor Notified	Time	Date	Notified b
N/A	N/A		N/A

COPY

FEMP
RADIOLOGICAL SURVEY REPORT

SURVEY NUMBER: 95-07-64-341

DATE: 7-26-95	RCT NAME: [redacted]	RCT BADGE #: 72763	PAGE: 2 OF 4
REVIEWED BY: [redacted]		REVIEWER BADGE NO: 7395	

MODEL	SERIAL NUMBER	TYPE (α, β, γ)	CALIBRATION -DUE DATE	BKGD. (cpm)	EFF./CF	COUNT TIME (min)	MDA (dpm)	INSP./ PERFORMANCE TEST SAT? YES	NO
A-3	77117	βγ	9-95	40 cpm	4/30	N/A	40/2000	✓	

ITEM NUMBER	LOCATION AND/OR DESCRIPTION	HEIGHT (FT.)	DPM/100cm² ALPHA REMOVABLE (1)	DPM/100cm² ALPHA FIXED PLUS REMOVABLE	DPM/100cm² BETA-GAMMA REMOVABLE (1)	DPM/100cm² BETA-GAMMA FIXED PLUS REMOVABLE	CORRECTED DOSE RATE (MREM/HR) γ CONTACT	β CONTACT	γ AT __ FT.	β AT __ FT.
1	VARIOUS LOCATIONS OF SOUTHFIELD - SEE DRAWING	ambient level	N/A	N/A	N/A	<MDCR	N/A	N/A	N/A	N/A
2										
3										
4										
5										
6										
7										
8										
9										
10										
11										
12										
13										
14										
15										
16										
17										
18										
19										
20										
21										

000044

N/A

Note (1): Values identified by an asterisk (*) indicate results are less than the calculated MDA (RC-RDA-010).

SUMMARY AND/OR SPECIAL REPORT FORM #1

▶ 7412

Location: SOUTHEASTMOST PORTION OF SOUTHFIELD	Date: 7-26-95
Document Title:	Serial Number: 95-07-64-341

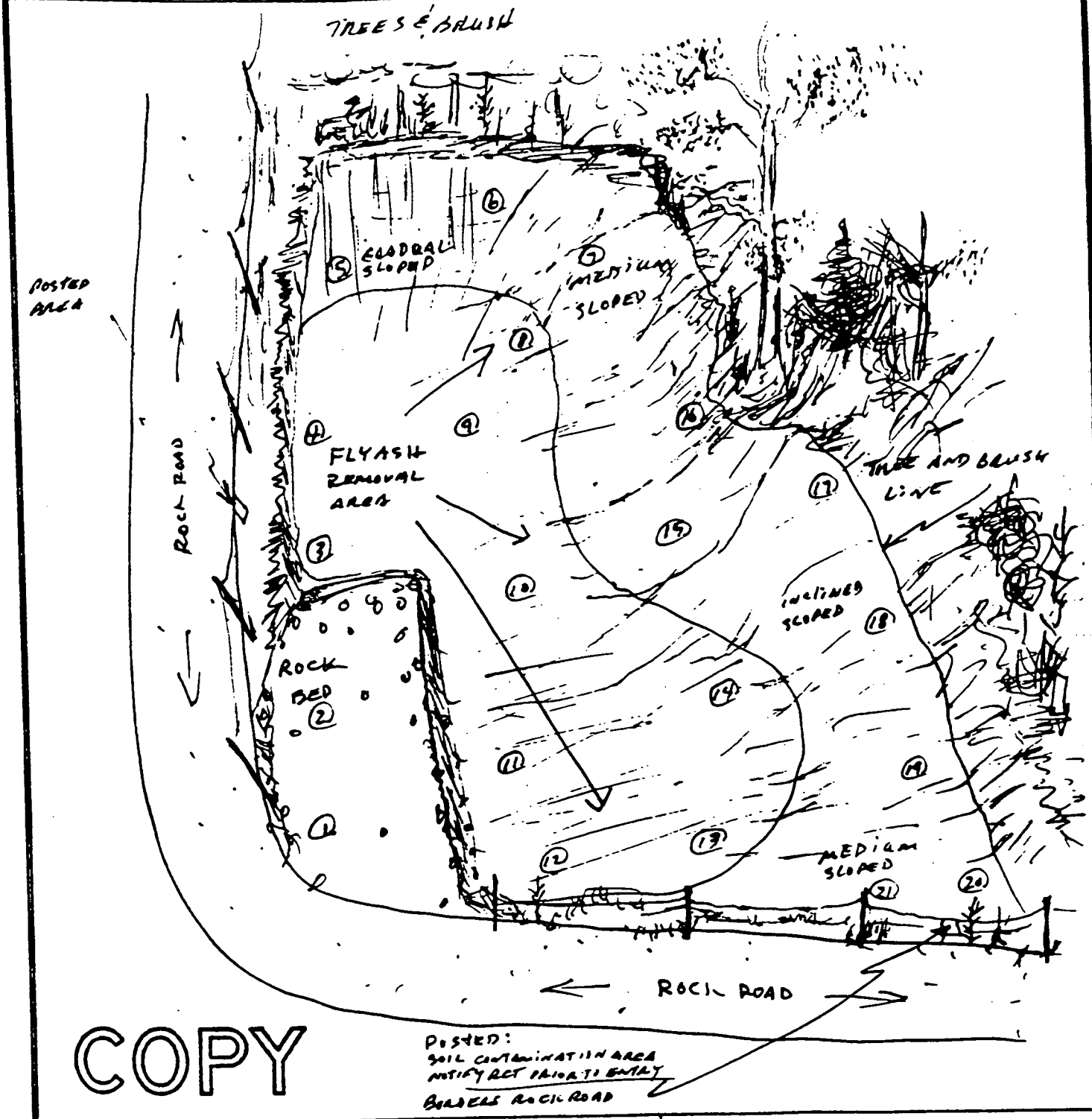

COPY

Entered by:	Reviewed by:
(Print Name) [redacted]	(Print Name) [redacted]
[redacted] 7-26-95	(Signature/Date) [redacted] 7/26/95

Location: SOUTHEAST MOST PORTION OF SOUTH FIELD | Date: 7-26-95

Document Title: Completion of FLYASH REMOVAL | Serial Number: 95-07-G4-341

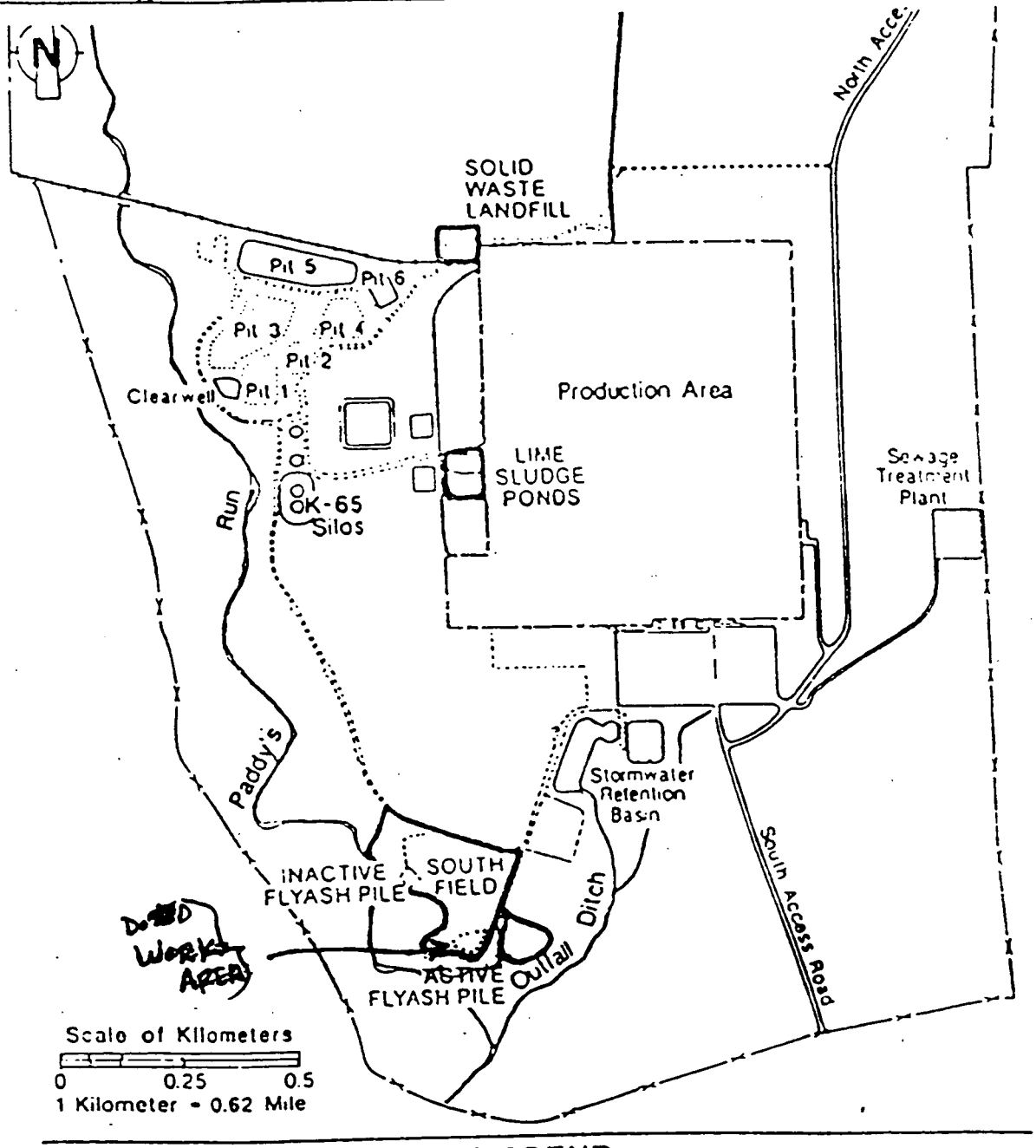

LEGEND

- Location of Operable Unit 2 Subunits
- Covered Pit
- Railroad Spur
- Fence
- Roadway

COPY

Entered by: 000046

(Print Name) [redacted]

(Signature/Date) [redacted] 7-26-95

Reviewed by:

(Print Name) [redacted]

(Signature/Date) [redacted] 7/26/95

7412

NEPA COMPLIANCE GROUP
FIELD SURVEILLANCE CHECKLIST

000047

Name: *Alicia Taylor*
Date of Surveillance: *July 20, 1995*
Project Observed: *Removal Action (RA) 30 sediment removal*
Project Engineer: *Tom Daughtrey/Uday Kumthekar*
Other Participants: *N/A*

Time: *10:15 a.m.*
NEPA Document No.: *RA 30 Work Plan (April 95)*
Phone: *648-4639*

Item No.	Surveillance Items	Observation	Resolution
1.	Unexpected Cultural Resource Discovery	Project Engineers and field crew cognizant and knowledgeable of procedure (SSOP 1070) for any unexpected discovery. A cultural resource has not been encountered during excavation and construction activities.	No resolution needed.
2.	Erosion and Sediment Controls	Continued excellent implementation of engineering controls (i.e., straw bales).	No resolution needed.

NEPA/NRM Compliance Signature *Alicia Taylor* Date *8-1-95*

Project Engineer Signature *U Kumthekar* Date *8/1/95*

cc
T. Daughtrey
J. Jalovec
J. Jenkins
G. Jones
U. Kumthekar
A. Taylor
R. Warner
N. Weatherup
T. Woods
NRM Files

Attachment II

ATTACHMENT II

STARTUP PLAN

Fernald Environmental

FERMCO

Restoration Management Corporation

7412

INTEROFFICE MEMORANDUM

To:	Distribution	**Date:**	August 16, 1995
Location:	Various	**Reference:**	
From:	J. Jenkins/U. Kumthekar	**FERMCO #:**	M:CRU2:95-0112
Location:	Fernald, MS 52-2	**Client:**	DOE DE-AC24-92OR21972
Extension:	648-4640	**Subject:**	NORMAL START-UP OF THE SEEPAGE COLLECTION SYSTEM, RA30

c: File Record Storage Copy 106.4.16

The normal start-up of the seepage collection system was successfully completed and witnessed on August 16, 1995 in accordance with the attached Start-Up Checklist. The system will be operated and maintained by RSO (AWWT personnel) beginning the first shift on August 18, 1995.

The operation of the level electrodes (test no. 4 of the electrical phase) was witnessed at each pump station in lieu of simulating the operating cycles using a bucket of water.

A premeasured flow of approximately 95 gallons instead of 200 gallons was pumped through the flow meter and recorded on the DCS. The total flow shown on the DCS was within 10 percent of the premeasured amount. All witnesses agreed that this was an acceptable differential.

Construction punch list items, as noted on page 5 of the Start-Up Checklist, including but not limited to panel labels, overflow screens, bollards, confined space tags, control panel locks, and dressing of ditches including the clay berm(s), should be completed within the next week to 10 days. Seeding and strawing will take place in September.

JJ:UK:tdo
Attachment

FS-F-3934 (11/28/94)

Fernald Environmental

FERMCO

Restoration Management Corporation

INTEROFFICE MEMORANDUM

DISTRIBUTION w/attachment:

Y. Afshar, Parsons
K. Bail, MS 44
F. Maranda, MS 44
J. Craighead, MS 31
M. Davis, MS 52-1
J. Turner, MS 81-1
C. Fermaintt, DOE-FN
R. Warner, DOE-FN
F. Flack, MS 44
G. Francis, Parsons
S. Ghantous, Parsons
J. Jalovec, DOE-FN
D. Hooper, MS 52-1
J. Hughes, MS 52-5
G. Jones, MS 52-2
J. Leslie, MS 32
J. McCormack, MS 44
B. Proski, Parsons
D. Vigus, MS 10
A. Winstead, MS 32
N. Weatherup, MS 52-2
R. Logsdon, MS 44
T. Daughtry, MS 44
R. Maurer, MS 31

FS-F-3934 (11/28/94)

Removal Action No. 30
Seepage Collection System for the South Field and Inactive Fly Ash Pile
Start-Up Checklist

NORMAL START-UP

The following are the steps needed for a normal start-up of the Seepage Collection System. The steps should be followed in the order listed.

1. Electrical

Panels and Controls

FERMCO lockout/tagout procedures shall be followed during the testing phases of construction to safeguard personnel from electrical hazards. Construction acceptance testing shall be witnessed and documented by the FERMCO Quality Assurance/Quality Control Department.

NOTE: To prevent operation of the pump during the following tests 1 through 4, temporarily disconnect power leads to the pump motor at the contactor terminals or remove overload heaters.

1) Throw the main switch to the "ON" position, applying power to the starter and associated control circuits. Verify that the "POWER ON" indicating light is lit.

2) Turn the selector switch to the "HAND" position. Verify that the main contactor energizes and that the "PUMP RUNNING" indicating light is on.

3) Pump is equipped with internal thermal switches and an internal moisture detector. Disconnect the control wires at the terminal block one at a time to verify continuity through these circuits.

4) Place the selector switch in the "AUTO" position. Simulate the operation cycles by placing level electrodes in a bucket of water and verifying operation of contactor, "PUMP RUNNING" indicating light, and "OVERFLOW" indicating light. Identify the two COMMON electrodes and the LOW LEVEL, HIGH LEVEL, and OVERFLOW electrodes.
   (1) Insert both COMMON electrodes; insert LOW LEVEL electrode; no change.
   (2) Insert HIGH LEVEL electrode; observe contactor energized and run light on.

(3) Insert OVERFLOW electrode; observe contactor de-energized, overflow light on and pump running light off.

(4) Withdraw OVERFLOW electrode; observe contactor energized and overflow light off, pump running light on.

(5) Withdraw LOW LEVEL electrode; observe contactor de-energized and pump running light off.

(6) Repeat as necessary to satisfactorily verify the operation of the automatic level control operation.

5) Replace the level probes in the sump, ensuring placement at correct levels, as specified on the drawings. Switch off the power and reinstall the motor wiring or heater elements for normal operation of the pump.

6) With water in the sump, operate the pump in the "HAND" position and verify pump operation, checking for correct rotation and any abnormal operation or vibration.

2. Mechanical

1) FERMCO start-up personnel shall position the manual valves as shown below:

000052

Valve No.	Location	Initial Position
V-101	East Pump Station	OPEN
V-103	COMH-3	CLOSED
V-105	West Pump Station	OPEN
V-106	COMH-1	CLOSED
V-107	COMH-2	CLOSED
V-109	COMH-4	CLOSED
V-110	COMH-5	CLOSED
V-111	COMH-6	CLOSED
V-112	Meter manhole	OPEN
V-113	Meter manhole	1/3 OPEN
V-114	Meter manhole	CLOSED
V-115	COMH-3	OPEN
V-116	COMH-3	OPEN
V-117	Meter manhole	CLOSED

2) Starting with any one of the two pump stations, fill the sump with clean water to approximately midway between the low-level stop and high-level start positions.

3) Turn the pump selector switch to "Run" ("ON") and observe the following:
   (1) Check the pump for normal operation without unusual sounds.
   (2) Check for leakage at the discharge elbow connection.

4) Turn the pump selector switch to "OFF" if any unusual conditions are observed. If the pump is running normally, stop it when the water level reaches low-level stop. Correct any problems encountered before proceeding further with the start-up.

5) Reset the pump selector switch to "Automatic" and refill the sump with water. Check to see that the pump starts properly at the high-level start position and stops at the low-level stop position.

6) Repeat Step 5 until flow is observed at the meter. Adjust Valve V-113 until approximately 30 gpm is flowing.

7) Refill the sump to the high start level and continue filling the sump at a rate greater than the pump discharge rate. Readjust Valve V-113 for a lower flow rate, if necessary. Check to see that the pump stops at the high overflow level, then let the pump empty the sump and stop.

8) Repeat Steps 2 through 7 for the other pump station.

9) Refill both sumps until both pumps are operating. Adjust Valve V-113 until the flow is approximately 50 gpm.

3. Instrumentation

Flow Meter Transmitter Calibration

After verifying that the electrical and mechanical portions of the start-up plan have been completed, proceed with the following:

1) Verify and/or adjust the setting for the flow loop FIT999 on the AWWT Fischer-Porter Distributed Control System (DCS) so that 4 to 20 mA (0 to 100 percent) corresponds to 0 to 80 gpm.

2) Check the flow meter (FIT999) for the calibration sticker. The information that is to appear on the sticker is the date of calibration, the next scheduled date of calibration, and the signature of the person performing the calibration. If the calibration sticker information is not complete, continue with the next step; otherwise, proceed to step 6.

3) Calibrate the flow meter FIT999 according to the manufacturer's instructions.

4) Calibrate the transmitter so that 4 to 20 mA corresponds to 0 to 80 gpm.

5) Fill in the information on the calibration sticker and affix it to the flow meter.

6) Turn the selector switch to the "OFF" position and verify that the mechanical portions of the start-up plan have been completed.

7) Fill the East Pump Station collection sump with sufficient water to cover the high level switch.

8) Place the selector switch in the "AUTO" position.

9) After the pump has shut off, place the selector switch in the "OFF" position.

000054

10) Place 200 gallons of premeasured water (plus or minus 1 gallon) into the East Pump Station.

11) Make note of or zero the flow totals on the flow meter and at the operator station for the AWWT Fischer Porter DCS.

12) Turn the selector switch to the "AUTO" position. The pump should start.

13) While the pump is running, compare the flow on the meter to the flow on the DCS. If the flows are different by more than 1 gpm, adjust the DCS input parameters to achieve agreement between FIT999 and the operator station readout.

14) When the pump stops, upon reaching the low-level switch, compare the total flow on the meter and the total flow shown on the DCS to the premeasured volume. If the difference is greater than 5 percent, correct the problem and return to step 10.

REFERENCES

(PARSONS 1995) PARSONS ERA Project, 1995. *Removal Action No. 30, Seepage Collection System for the South Field and Inactive Fly Ash Pile, Start-Up Plan.* Fairfield, Ohio: PARSONS.

WITNESSES

	Name (Print)	Signature
PARSONS:	YUNUS AFSHAR	Yunus Afshar 8/16/95
FERMCO:	[illegible]	[illegible] 8/16/95
CRU-2 Engineering	JAMES C. JENKINS	James C. Jenkins 8/16/95
QA	* D.N. Zyes James T. Taylor	[illegible] 8-16-95
Construction	RUSSELL LOGSDON	[illegible]
Facility Owner	JAMES W LESLIE	James W Leslie
Health and Safety	RICK MAUKER	[illegible] 8/16/95

* punchlist: incomplete 8.16.95

7412

Removal Action No. 30
Seepage Collection System for the South Field and Inactive Fly Ash Pile
Start-Up Plan

Operable Unit 2
Project Order 139
August 1995
Revision 0

Environmental Remedial Action Project
Fernald Environmental Management Project
Fernald, Ohio
FERMCO Subcontract No. 2-21487

PARSONS

Fairfield Executive Center
6120 South Gilmore Road
Fairfield, Ohio 45014

Removal Action No. 30
Seepage Collection System
for the South Field and Inactive Fly Ash Pile
Start-Up Plan

CONTENTS

SECTION

1.0 Introduction 1

2.0 System Description and Intended Performance 1

3.0 Pre-Start-up Check 2

4.0 Normal Start-up 3
- 4.1 Electrical 3
- 4.2 Mechanical, Normal Start-Up 4
- 4.3 Instrumentation 6

5.0 Normal Shutdown 7

6.0 References 7

APPENDIX

A Construction Drawings and Specification Notes

LIST OF ACRONYMS AND ABBREVIATIONS

AWWT	Advanced Wastewater Treatment
COMH	Clean-Out Manhole
CS	Carbon Steel
DCS	Distributed Control System
FERMCO	Fernald Environmental Restoration Management Corporation
gpm	gallons per minute
HDPE	High-Density Polyethylene

000058

1.0 INTRODUCTION

The South Field and Inactive Fly Ash Pile are located southwest of the former production area. In the past, these units were used as disposal areas for nonprocess wastes, including boiler plant ash and construction debris. Much of the material in these units is contaminated with low concentrations of uranium. Water seeping through the disposed material into the ditches along the northern and eastern edges of the South Field and the western edge of the Inactive Fly Ash Pile has been observed to have uranium concentrations ranging from 23 to 910 micrograms per liter (FERMCO 1995). Water entering the ditches can travel downstream to areas where the Great Miami Aquifer outcrops. During dry seasons, the concentration of contaminants in water in the drainage ditches is higher due to lack of dilution when the seepage enters the ditches. In contrast, seepage during wet periods is diluted by relatively clean surface runoff.

The goal of the Seepage Collection System is to capture the seepage in its more contaminated state. The Seepage Collection System would collect contaminated seepage entering the existing drainage ditches.

2.0 SYSTEM DESCRIPTION AND INTENDED PERFORMANCE

The goal of the Seepage Collection System is to reduce impact on the Great Miami Aquifer due to contaminated seepage from the South Field and Inactive Fly Ash Pile.

The Seepage Collection System (see construction and specification drawings in Appendix A for detailed information) consists of the following:

1) East and West Pump Stations: Each pump station consists of a High-Density Polyethylene (HDPE) manhole; an 8-inch, perforated inlet pipe laid at the bottom of the ditch, connected to a 4-inch HDPE solid pipe leading to the sump; a 4-inch overflow pipe (the overflow pipe is screened to stop animal entry); and a 25 gallons per minute (gpm) submersible centrifugal grinder pump with water level controls.

2) Clean Out Manholes (COMHs): There are six COMHs provided at an approximate spacing of 500 feet. Each COMH is provided with a 2-inch drain gate valve and a 2-inch threaded nipple for draining the static head during service. In COMH No. 3, where the effluent lines from the East and West Pump Stations join together, two check valves are provided to block water from flowing into the opposite sump while only one pump is running.

3) Meter manhole: A meter manhole is provided near Tank No. 155 of the Advanced Wastewater Treatment (AWWT) facility, where the effluent line changes from underground to aboveground. This meter manhole houses a flow rate transmitter and manual shut-off valves (on either side of

the meter). A 2-inch gate valve is provided for drain and cleanout. A 1/2-inch globe valve is provided for drain and cleanout, and also to collect samples for periodic monitoring of seepage quality.

4) Pumps: The pump in each pump station is designed for an average flow of 25 gpm. The pump is water-level activated. The pump is activated by a high-level control and deactivated by a low-level control or overflow level control. During rainfall events that produce flow rates greater than 25 gpm, runoff will overflow the diversion berm and drain downstream into the existing ditches. The pumps will shut off when the water level reaches overflow level, and water inside the sump will drain out through the 4-inch overflow pipe. The pump is rail-mounted so that it can be lifted in and out of the sump during pump service and repair.

5) Effluent line: The seepage water collected in the sump will be pumped to the AWWT Plant Facility (Tank No. 155) through a 2-inch HDPE pipe. This 2-inch HDPE pipe is contained in a 4-inch HDPE pipe buried at about a 36-inch minimum depth. At the meter manhole the effluent line comes out of the ground and continues on a pipe rack to the top of Tank No. 155. The above-grade portion of the effluent line is made of 2-inch carbon steel (CS) carrier pipe and a 4-inch CS container pipe. The above-grade pipes are heat-traced and insulated.

3.0 PRE-START-UP CHECK

Before the system is started, the following checks shall be performed by Fernald Environmental Restoration Management Corporation (FERMCO):

1) Check the construction acceptance documents to ensure that every component is constructed according to the plans and specifications, and acknowledge acceptance.

2) Check the accuracy of the documents for all applicable and relevant functional technical tests (shop or field) for the electrical, mechanical, and instrumentation equipment, and acknowledge acceptance.

3) Make sure that all relevant site-specific procedural requirements, permits, and coordinations are complete.

Pre-start-up tests shall be performed in the following order: (1) electrical, (2) mechanical, and (3) instrumentation. The following tests (involving opening of electrical panels, as well as operation and voltage testing of electrical panels) shall be performed by FERMCO:

000060

1) Visually inspect the electrical installation and equipment, noting completion of construction. Ensure that there is no loose or exposed accessible wiring, that equipment ground is installed, and that conduit fitting covers are in place.

2) Check voltage at the disconnect switch. The overhead feeder line should be energized, served from the newly installed power panel at the Valve House near the Stormwater Retention Basin. Voltage should measure a minimum of 460 volts between phases.

3) Visually inspect the interior of the starter for completion of installation, including control transformer, level controls, control relay, lights, and hand-off-auto switch. Verify installation of dual element fuses and motor overload heaters sized in accordance with the pump manufacturer's instructions.

4) Verify installation of 30-amp fuses in main disconnect switch. Throw the switch to the "ON" position to supply power to the starter and distribution transformer/panel.

5) Switch on the distribution panel main circuit breaker, secondary main breaker, and branch circuit breakers for the light and receptacles. Verify 120 volts available at receptacles, with correct polarity and grounding. Verify operation of Ground Fault Circuit Interrupter circuit breakers.

6) Cover the photocell on the light fixture to check operation of the lamp.

4.0 NORMAL START-UP

The following are the steps needed for a normal start-up of the Seepage Collection System. The steps should be followed in the order listed.

4.1 Electrical

Panels and Controls

FERMCO lockout/tagout procedures shall be followed during the testing phases of construction to safeguard personnel from electrical hazards. Construction acceptance testing shall be witnessed and documented by the FERMCO Quality Assurance/Quality Control Department.

NOTE: To prevent operation of the pump during the following tests 1 through 4, temporarily disconnect power leads to the pump motor at the contactor terminals or remove overload heaters (see Drawing 92X-5900-E-00122).

1) Throw the main switch to the "ON" position, applying power to the starter and associated control circuits. Verify that the "POWER ON" indicating light is lit.

2) Turn the selector switch to the "HAND" position. Verify that the main contactor energizes and that the "PUMP RUNNING" indicating light is on.

3) Pump is equipped with internal thermal switches and an internal moisture detector. Disconnect the control wires at the terminal block one at a time to verify continuity through these circuits.

4) Place the selector switch in the "AUTO" position. Simulate the operation cycles by placing level electrodes in a bucket of water and verifying operation of contactor, "PUMP RUNNING" indicating light, and "OVERFLOW" indicating light. Identify the two COMMON electrodes and the LOW LEVEL, HIGH LEVEL, and OVERFLOW electrodes.
   (1) Insert both COMMON electrodes; insert LOW LEVEL electrode; no change.
   (2) Insert HIGH LEVEL electrode; observe contactor energized and run light on.
   (3) Insert OVERFLOW electrode; observe contactor de-energized, overflow light on and pump running light off.
   (4) Withdraw OVERFLOW electrode; observe contactor energized and overflow light off, pump running light on.
   (5) Withdraw LOW LEVEL electrode; observe contactor de-energized and pump running light off.
   (6) Repeat as necessary to satisfactorily verify the operation of the automatic level control operation.

5) Replace the level probes in the sump, ensuring placement at correct levels, as specified on the drawings. Switch off the power and reinstall the motor wiring or heater elements for normal operation of the pump.

6) With water in the sump, operate the pump in the "HAND" position and verify pump operation, checking for correct rotation and any abnormal operation or vibration.

4.2 Mechanical, Normal Start-Up

Normal Start-Up

1) FERMCO start-up personnel shall position the manual valves as shown below:

000062

Valve No.	Location	Initial Position
V-101	East Pump Station	OPEN
V-103	COMH-3	CLOSED
V-105	West Pump Station	OPEN
V-106	COMH-1	CLOSED
V-107	COMH-2	CLOSED
V-109	COMH-4	CLOSED
V-110	COMH-5	CLOSED
V-111	COMH-6	CLOSED
V-112	Meter manhole	OPEN
V-113	Meter manhole	1/3 OPEN
V-114	Meter manhole	CLOSED
V-115	COMH-3	OPEN
V-116	COMH-3	OPEN
V-117	Meter manhole	CLOSED

2) Starting with any one of the two pump stations, fill the sump with clean water to approximately midway between the low-level stop and high-level start positions.

3) Turn the pump selector switch to "Run" ("ON") and observe the following:
   (1) Check the pump for normal operation without unusual sounds.
   (2) Check for leakage at the discharge elbow connection.

4) Turn the pump selector switch to "OFF" if any unusual conditions are observed. If the pump is running normally, stop it when the water level reaches low-level stop. Correct any problems encountered before proceeding further with the start-up.

5) Reset the pump selector switch to "Automatic" and refill the sump with water. Check to see that the pump starts properly at the high-level start position and stops at the low-level stop position.

6) Repeat Step 5 until flow is observed at the meter. Adjust Valve V-113 until approximately 30 gpm is flowing.

7) Refill the sump to the high start level and continue filling the sump at a rate greater than the pump discharge rate. Readjust Valve V-113 for a lower flow rate, if necessary. Check to see that the pump stops at the high overflow level, then let the pump empty the sump and stop.

8) Repeat Steps 2 through 7 for the other pump station.

9) Refill both sumps until both pumps are operating. Adjust Valve V-113 until the flow is approximately 50 gpm.

4.3 Instrumentation

Flow Meter Transmitter Calibration

After verifying that the electrical and mechanical portions of the start-up plan have been completed, proceed with the following (see Bailey Fischer & Porter instruction bulletin "Magnetic Flowmeters 10D1475" and "50 XM1000," Rev.1).

1) Verify and/or adjust the setting for the flow loop FIT999 on the AWWT Fischer-Porter Distributed Control System (DCS) so that 4 to 20 mA (0 to 100 percent) corresponds to 0 to 80 gpm.

2) Check the flow meter (FIT999) for the calibration sticker. The information that is to appear on the sticker is the date of calibration, the next scheduled date of calibration, and the signature of the person performing the calibration. If the calibration sticker information is not complete, continue with the next step; otherwise, proceed to step 6.

3) Calibrate the flow meter FIT999 according to the manufacturer's instructions.

4) Calibrate the transmitter so that 4 to 20 mA corresponds to 0 to 80 gpm.

5) Fill in the information on the calibration sticker and affix it to the flow meter.

6) Turn the selector switch to the "OFF" position and verify that the mechanical portions of the start-up plan have been completed.

7) Fill the East Pump Station collection sump with sufficient water to cover the high level switch.

8) Place the selector switch in the "AUTO" position.

9) After the pump has shut off, place the selector switch in the "OFF" position.

10) Place 200 gallons of premeasured water (plus or minus 1 gallon) into the East Pump Station.

11) Make note of or zero the flow totals on the flow meter and at the operator station for the AWWT Fischer Porter DCS.

12) Turn the selector switch to the "AUTO" position. The pump should start.

13) While the pump is running, compare the flow on the meter to the flow on the DCS. If the flows are different by more than 1 gpm, adjust the DCS input parameters to achieve agreement between FIT999 and the operator station readout.

14) When the pump stops, upon reaching the low-level switch, compare the total flow on the meter and the total flow shown on the DCS to the premeasured volume. If the difference is greater than 5 percent, correct the problem and return to step 10.

5.0 NORMAL SHUTDOWN

At the successful completion of the above tests and checks, turn all the switches and controls to the "OFF" position. For the restart of the Seepage Control System, refer to the Operation and Maintenance Plan.

6.0 REFERENCES

(FERMCO 1995) Fernald Environmental Restoration Management Corporation, January 1995. *Work Plan, Removal Action No. 31: Seepage Control to South Field and Inactive Fly Ash Pile*. U.S. Department of Energy Fernald Field Office.

APPENDIX A

CONSTRUCTION DRAWINGS AND SPECIFICATION NOTES

R92x00139.m(784.ws412) po139@ws412. Mon Jul 31 14:46:38 CDT 1995

UNITED STATES DEPARTMENT OF ENERGY

FERNALD ENVIRONMENTAL MANAGEMENT PROJECT

SEEPAGE COLLECTION AND REMOVAL OF SEDIMENT AT THE SOUTHFIELD AND INACTIVE FLYASH PILE

REMOVAL ACTION NO. 30

OPERABLE UNIT 2 - PROJECT ORDER 139

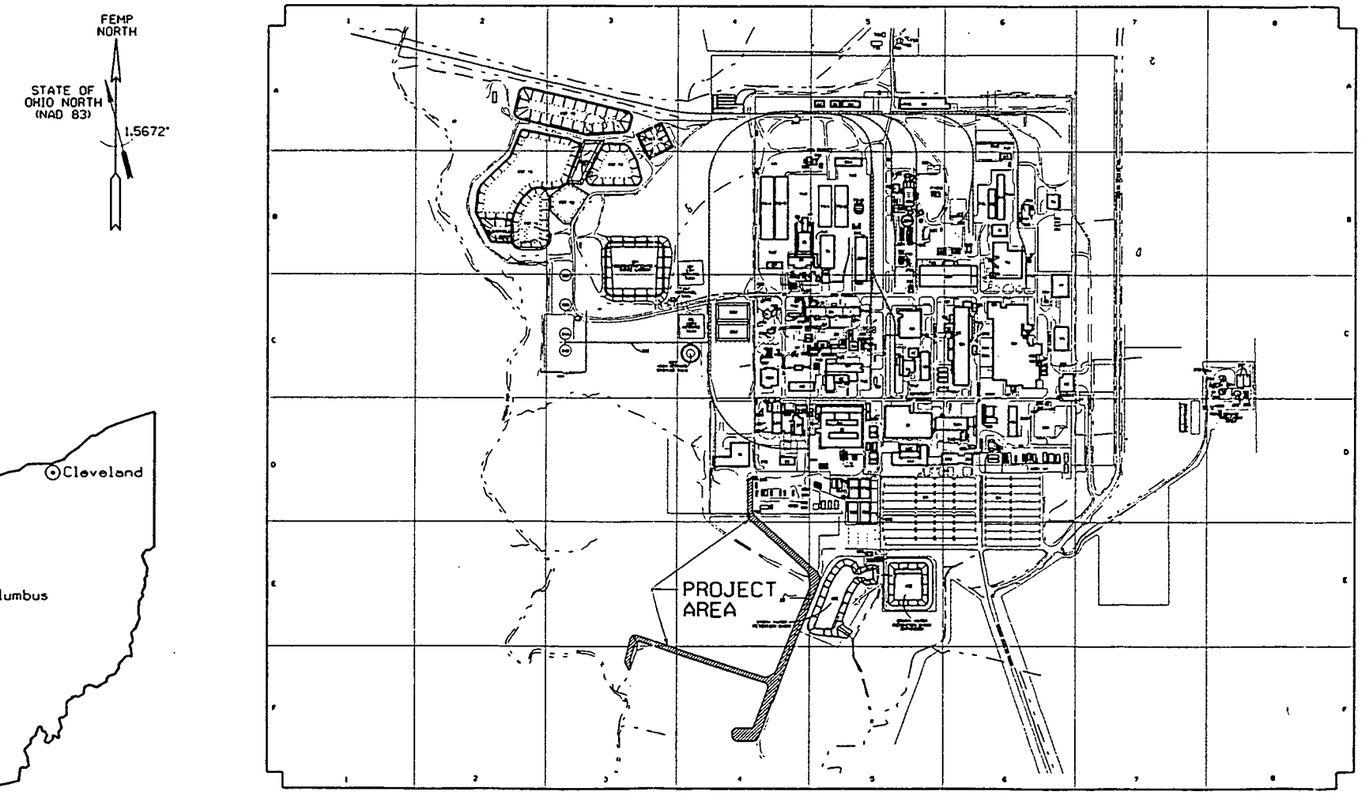

PARSONS

The Ralph M. Parsons Company • Parsons Main, Inc. • Engineering-Science, Inc.

ARCHITECTS - ENGINEERS
CINCINNATI, OHIO

NOTES

1. FOR DRAWING INDEX, SEE DRAWING 92X-5900-X-00140.

7412

REF DWG NO.	DRAWING TITLE
92X-5900-X-00140	DRAWING INDEX

000067

REV. NO.	ISSUE OR REVISION PURPOSE - DESCRIPTION	A-E	FERNCO	DATE
0	CERTIFIED FOR CONSTRUCTION			

INITIALS AND DATE

UNITED STATES DEPARTMENT OF ENERGY
FERNALD ENVIRONMENTAL MANAGEMENT PROJECT

THIS DRAWING PREPARED BY
PARSONS
THE RALPH M. PARSONS CO. - PARSONS MAIN, INC. - ENGINEERING-SCIENCE, INC.
CINCINNATI, OHIO

PROJECT NAME
SEEPAGE COLLECTION & REMOVAL OF SEDIMENT
REMOVAL ACTION NO. 30

DRAWING TITLE
PROJECT TITLE SHEET

DRAWN BY	DATE	LEAD DISCIPLINE	DATE	CHECKED BY	DATE
K.L. RABBITT	10/18/95			K. GERARD	11/17/95

PLANT/BLDG. NO.	FLOOR	SCALE	CLASS
		NONE	

SUBMITTED FOR APPROVAL: A-E DATE
FERNCO CRU APPROVAL: DATE

PREPARED UNDER PARSONS PROJECT ORDER NUMBER	DOE PROJECT NO.	TEMP PROJECT NO.	DRAWING INDEX CODE NO.	SHEET NO.	REV. NO.
CRU2/P0139		WBS 1.1.1.1.2.2.6 00-90701	92X-5900-X-00139	X0001	0

R92g00125.m(787.ws412) po139@ws412. Mon Jul 31 14:59:57 CDT 1995

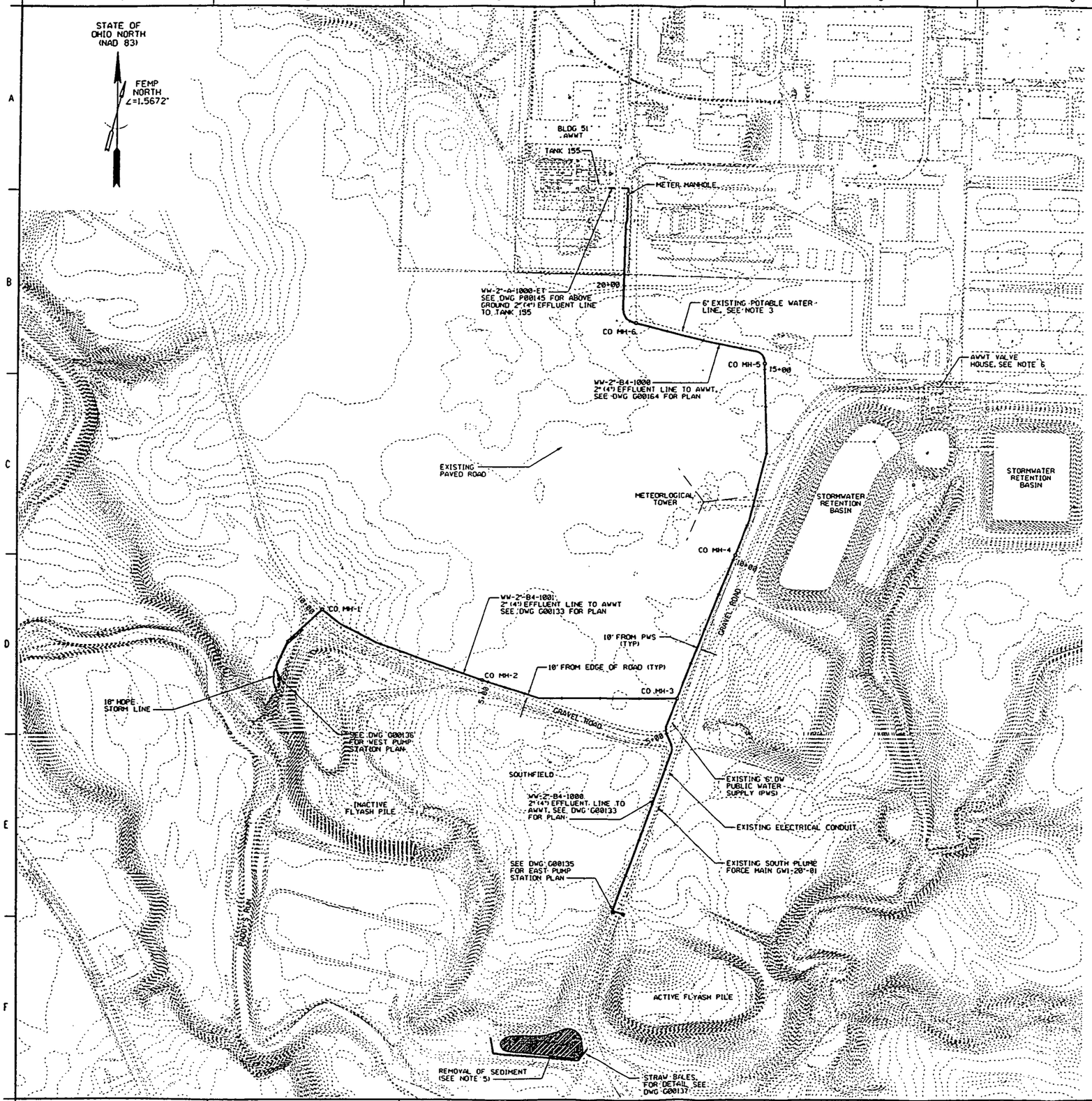

NOTES

7412

1. FOR DRAWING INDEX, SEE DRAWING 92X-5900-X-00140.
2. EXISTING CONDITIONS SHOWN ON THIS DRAWING WERE PREPARED FROM FEMP SITE PROVIDED DATA FROM DOCUMENTS LISTED BELOW:

   PARSONS TOPOGRAPHY 1992
   FEMP CADD GRID/UTILITY DRAWINGS
   FEMP CONTRACTOR PROJECT DESIGN DOCUMENTS
   B.L. PAYNE, FIELD SURVEY 2/95.

   FIELD RUN SURVEY AVAILABLE FOR: WEST PUMP STATION, EAST PUMP STATION AND PUBLIC WATER SUPPLY ROUTE.
3. 2" HDPE EFFLUENT LINE (INSIDE A 4" HDPE CONTAINMENT LINE) TO AWWT TO FOLLOW ROUTE OF 6" POTABLE WATER LINE. THE 6" LINE IS MARKED IN THE FIELD WITH POST AND SIGN (AT 50' SPACING) AND WITH A MAGNETIC TRACE WIRE.
4. THIS DRAWING IS A MASTER SITE PLAN ONLY, SEE PLAN DRAWINGS AS IDENTIFIED FOR UTILITIES AND DETAILS OF AREAS.
5. 900 CY OF SEDIMENT 18" DEEP OR LESS IS TO BE EXCAVATED IN ACCORDANCE WITH SITE PROCEDURES IN THIS AREA. LIMITS TO BE FIELD DETERMINED. AREA IS TO BE GRADED AND SEEDED UPON COMPLETION. SEDIMENT CONTROLS TO BE INSTALLED IN ACCORDANCE WITH SITE PROCEDURES.

   EXCAVATED SEDIMENT AND EXCESS SOIL SHALL BE HAULED AND STORED IN THE CATEGORY I STOCKPILE SOUTH OF THE STORM WATER RETENTION BASIN PER THE REMOVAL ACTION 17 WORK PLAN. ANY EXCAVATED SEDIMENT OR EXCESS SOIL FOUND TO EXCEED CATEGORY I CRITERIA SHALL BE PLACED IN THE PHASE I CONTROLLED STOCKPILE AS DEFINED IN THE REMOVAL ACTION 17 WORK PLAN. EXCAVATED SEDIMENT AND EXCESS SOIL EXCEEDING CATEGORY I CRITERIA SHALL BE TRANSPORTED IN ACCORDANCE WITH THE RADIOLOGICAL PERFORMANCE REQUIREMENTS MANUAL (RM-0020).
6. FOR ELECTRICAL SERVICE ROUTING AND POWER POLE LOCATIONS, SEE DRAWING 92X-5900-E-00120.
7. DISPOSAL AND STOCKPILE OF EXCESS CONSTRUCTION MATERIAL AND WASTE IS TO BE PERFORMED IN ACCORDANCE WITH SSOP 0044; MANAGEMENT OF SITE DEBRIS AND WASTE FROM A PROJECT.

REF DWG NO.	DRAWING TITLE
92X-5900-X-00140	DRAWING INDEX
92X-5900-G-00133	PIPELINE PLAN - EFFLUENT LINE SF & AFP
92X-5900-G-00135	GRADING PLAN - EAST PUMP STATION
92X-5900-G-00136	GRADING PLAN - WEST PUMP STATION
92X-5900-G-00137	SITE DETAILS - GENERAL
92X-5900-G-00164	PIPELINE PLAN - EFFLUENT LINE AT AWWT
92X-5900-E-00120	PLAN - PROJECT SITE PLAN
92X-5900-P-00145	PIPE SUPPORTS - PLAN AND DETAILS

000068

REV. NO.	ISSUE OR REVISION PURPOSE - DESCRIPTION	A-E	FERNCO	DATE
0	CERTIFIED FOR CONSTRUCTION			

INITIALS AND DATE

UNITED STATES DEPARTMENT OF ENERGY
FERNALD ENVIRONMENTAL MANAGEMENT PROJECT

THIS DRAWING PREPARED BY
PARSONS
THE RALPH M. PARSONS CO. - PARSONS MAIN, INC. - ENGINEERING-SCIENCE, INC.
CINCINNATI, OHIO

PROJECT NAME
SEEPAGE COLLECTION & REMOVAL OF SEDIMENT
REMOVAL ACTION NO. 30

DRAWING TITLE
CIVIL
MASTER SITE PLAN

DRAWN BY	DATE	LEAD DRAFTER	DATE	CHECKED BY	DATE
T. AFSHAR	2-22-95			K. GERARD	3-17-95

PLANT/BLDG. NO.	FLOOR	SCALE	CLASS
		1"=100'	

SUBMITTED FOR APPROVAL — A-E — DATE
FERNCO CRU APPROVAL — DATE

PREPARED UNDER PARSONS PROJECT ORDER NUMBER	CLIN PROJECT NO.	FEMP PROJECT NO.	DRAWING SHEET CODE NO.	SHEET NO.	REV. NO.
CRU2/P0139		WBS 1.1.1.1.2.2.6 00-90701	92X-5900-G-00125	G0001	0

R92x00140.m(785.ws412) po139@ws412. Mon Jul 31 14:48:17 CDT 1995

NOTES

7412

INDEX OF DRAWINGS

INDEX CODE NO.	DRAWING NO.	SHEET NO.	REVISION NO.	DRAWING TITLE	REMARKS
	92X-5900-X-00139	X0001	0	PROJECT TITLE SHEET	
	92X-5900-X-00140	X0002	0	DRAWING INDEX	
	92X-5900-X-00141	X0003	0	LEGEND AND SYMBOLS	
	92X-5900-G-00125	G0001	0	CIVIL - MASTER SITE PLAN	
	92X-5900-G-00164	G0002	0	CIVIL - PIPELINE PLAN - EFFLUENT LINE AT AWWT	
	92X-5900-G-00133	G0003	0	CIVIL - PIPELINE PLAN - EFFLUENT LINE SOUTH FIELD (SF) AND INACTIVE FLY ASH PILE (IFP)	
	92X-5900-G-00135	G0004	0	CIVIL - GRADING PLAN - EAST PUMP STATION	
	92X-5900-G-00136	G0005	0	CIVIL - GRADING PLAN - WEST PUMP STATION	
	92X-5900-G-00134	G0006	0	CIVIL - SITE DETAILS - PUMP STATIONS	
	92X-5900-G-00137	G0007	0	CIVIL - SITE DETAILS - GENERAL	
	92X-5900-G-00163	G0008	0	CIVIL - SITE DETAILS - CLEANOUT MANHOLE	
	92X-5900-G-00173	G0009	0	CIVIL - SPECIFICATIONS	
	92X-5900-P-00145	P0001	0	PIPING / PLANT DESIGN - PIPE SUPPORTS - PLAN AND DETAILS	
	92X-5900-E-00120	E0001	0	ELECTRICAL - PLAN - PROJECT SITE PLAN	
	92X-5900-E-00121	E0002	0	ELECTRICAL - PLANS - EAST & WEST PUMP STATIONS AND AWWT TANK 155	
	92X-5900-E-00122	E0003	0	ELECTRICAL - SCHEMATIC, ELEVATIONS, AND DETAILS - EAST AND WEST PUMP STATIONS	
	92X-5900-E-00123	E0004	0	ELECTRICAL - ELECTRICAL DETAILS	
	92X-5900-E-00124	E0005	0	ELECTRICAL - ELECTRICAL INSTALLATION NOTES AND EQUIPMENT DESCRIPTIONS/SPECIFICATIONS	
	92X-5900-N-00143	N0001	0	MECHANICAL PROCESS - PIPING AND INSTRUMENTATION DIAGRAM - SOUTH FIELD AND INACTIVE FLY ASH PILE SEEPAGE COLLECTION SYSTEM	
	92X-5900-N-00142	N0002	0	MECHANICAL PROCESS - PIPING AND INSTRUMENTATION DIAGRAM - SYMBOLS AND LEGEND SHEET	
	92X-5900-N-00172	N0003	0	INSTRUMENTATION - FLOW METER LOOP, AND MISCELLANEOUS DETAILS	

000069

REV. NO.	ISSUE OR REVISION PURPOSE - DESCRIPTION	A-E	FERNCO	DATE
0	CERTIFIED FOR CONSTRUCTION			

INITIALS AND DATE

UNITED STATES
DEPARTMENT OF ENERGY
FERNALD ENVIRONMENTAL MANAGEMENT PROJECT

THIS DRAWING PREPARED BY
PARSONS
THE RALPH M. PARSONS CO. - PARSONS MAIN, INC. - ENGINEERING-SCIENCE, INC.
CINCINNATI, OHIO

PROJECT NAME
SEEPAGE COLLECTION & REMOVAL OF SEDIMENT
REMOVAL ACTION NO. 30

DRAWING TITLE
DRAWING INDEX

DRAWN BY	DATE	LEAD CHECKED	DATE	CHECKED BY	DATE
K.L. RABBITT	03/08/95			K. GERARD	03/17/95

PLANT/BLDG. NO.	FLOOR	SCALE	CLASS
		NONE	

SUBMITTED FOR APPROVAL: A-E DATE
FERNCO CRU APPROVAL: DATE

PREPARED UNDER PARSONS PROJECT ORDER NUMBER	DOE PROJECT NO.	TEMP PROJECT NO.	DRAWING SHEET CODE NO.	SHEET NO.	REV. NO.
CRU2/P0139		VBS 1.1.1.1.2.2.6 00-90701	92X-5900-X-00140	X0002	0

R92x00141.m(786.ws412) po139@ws412. Mon Jul 31 14:49:48 CDT 1995

GENERAL LEGEND

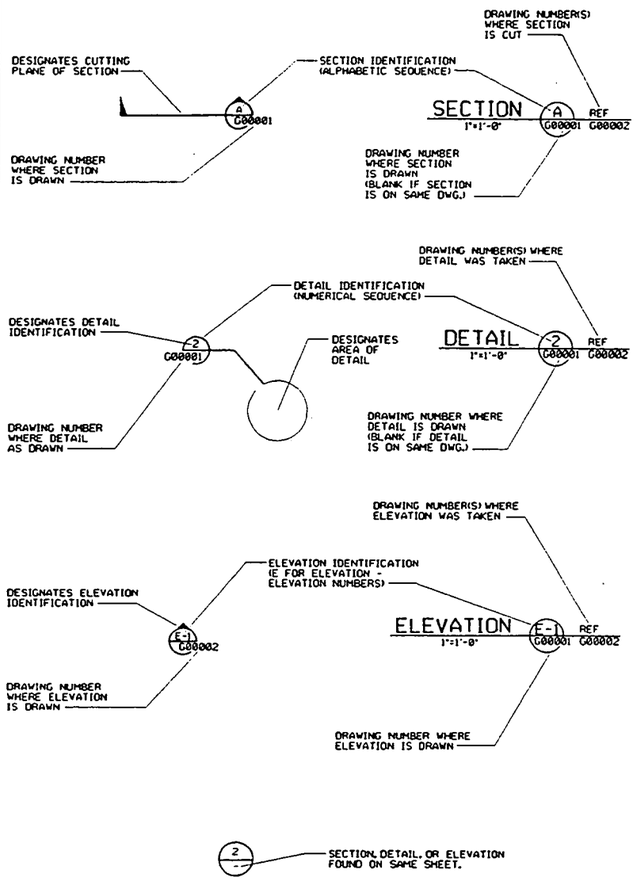

NOTE:

ABBREVIATED DRAWING NUMBERS WILL BE USED FOR ALL SECTIONS, DETAILS, ELEVATIONS, AND WITHIN NOTES AND CALL OUTS IN THE BODY OF THE DRAWING.

FOR EXAMPLE: 95X-5900-G-00002 = DRAWING NUMBER
G00002 = ABBREVIATED DRAWING NUMBER

DIMENSIONING:

DIMENSIONS AND/OR ELEVATIONS MARKED THUS (+/-) SHALL BE VERIFIED IN THE FIELD BY CONTRACTOR.

USE DIMENSIONS AS SHOWN. DO NOT SCALE.

NTS (NOT TO SCALE) IS SHOWN ONLY WHERE DIMENSION IS OBVIOUSLY OUT OF SCALE.

UTILITY SYMBOLS

EXISTING		PROPOSED
— — ST — —	STORM SEWER	—— ST ——
— — SN — —	SANITARY SEWER	—— SN ——
— — FG — —	FUEL GAS	—— FG ——
— — DW — —	DRINKING WATER	—— DW ——
— — FOI — —	FIRE PROTECTION	—— FOI ——
— — LS — —	LIVE STEAM	—— LS ——
— — WS — —	WATER SUPPLY	—— WS ——
— — WR — —	COOLING WATER RETURN	—— WR ——
— — TW — —	PROCESS WATER	—— TW ——
— — CE — —	CONTAMINATE WATER	—— CE ——
— — FT — —	FILTRATE OR EFFLUENT	—— FT ——
— — DF — —	DEIONIZED FEED	—— DF ——
— — PW — —	DEIONIZED WATER	—— PW ——
— — BR — —	BRINE	—— BR ——
— — RW — —	RAW WATER	—— RW ——
— — A — —	ALARM	—— A ——
— — CN — —	STEAM CONDENSATE	—— CN ——
— — VE — —	VENT LINES	—— VE ——
— — SD — —	SUB-SURFACE DRAINAGE	—— SD ——
— — SL — —	SUMP LIQUOR	—— SL ——
— — E — —	ELECTRICAL	—— E ——
— — OE —O—	OVERHEAD ELECTRICAL	—— OE —•—
— — T — —	TELEPHONE	—— T ——
— — G — —	ELECTRIC GROUND	—— G ——
— — PA — —	PLANT AIR	—— PA ——
— — SA — —	INSTRUMENT AIR SUPPLY	—— SA ——
.....	ABANDONED	
	EFFLUENT LINE	—— WW ——

BALLOON LEGEND

- PIV — POST INDICATOR VALVE
- SMH — SANITARY MANHOLE
- EMH — ELECTRICAL MANHOLE
- TMH — TELEPHONE MANHOLE
- CB — STORM SEWER CATCH BASIN
- HFH — HIGH PRESSURE FIRE HYDRANT
- LFH — LOW PRESSURE FIRE HYDRANT

GRADING SYMBOLS

EXISTING		PROPOSED
X 584.9	SPOT ELEVATION	X 585.4
— — 584 — — -	CONTOUR - MINOR	584
— — 585 — — -	CONTOUR - MAJOR	585
(TOE)	SLOPE INDICATOR	(TOE)

ARCHITECTURAL LEGEND

EXISTING		PROPOSED
	DOOR NUMBER	103
	ROOM NUMBER	101

SYMBOLS LEGEND

EXISTING		PROPOSED
	POST INDICATOR VALVE (PIV)	
	FIRE HYDRANT (FH)	
	MANHOLE (MH)	S OR D
	CATCH BASIN (CB)	D
	LIGHT POLE	
	PIPE SUPPORT	
	ELECTRICAL MANHOLE	E
	TELEPHONE MANHOLE	T
	STREET WASHERS	
	VALVE BOX	
1313	MONITORING WELL	
	SURFACE DRAINAGE FLOW	
P	POWER POLE (PP)	P
	GRAVEL ROADWAY/DRIVEWAY	
	ASPHALT ROADWAY/DRIVEWAY	
	CONCRETE PAD/ ROADWAY/DRIVEWAY	
	BUILDING/TRAILER	
	RAILROAD TRACK	
	OU BOUNDARY	
	FENCE	
	TREE LINE	
	DECIDUOUS TREE	
	CONIFEROUS TREE	
	CENTERLINE DRAINAGE DITCH	
	RIVER/CREEK	
	TO BE REMOVED	
	SILT FENCE	
	ELECTRICAL TRANSFORMER	T
	TRANSMISSION TOWER	
	HEADWALL	— OR
BM	BENCH MARK	
—XX—XX—	CONSTRUCTION/WIND BARRIER FENCE	—XX—XX—
	SIGN	
	BOLLARD/GUARD POST	
PB	ELECTRICAL PULL BOX	
	SURVEY CONTROL POINT	
— - —	ROAD CENTERLINE OR BASELINE	— - —
	BEND	OR
	TEE	
	THRUST BLOCK	
	REDUCER	
W OR U	UNKNOWN	
	STRAW BALE SILT BARRIER	
	FENCE GATE	

NOTES

1. FOR DRAWING INDEX, SEE DRAWING 92X-5900-X-00140.

7412

REF DWG NO.	DRAWING TITLE
92X-5900-X-00140	DRAWING INDEX

000070

REV. NO.	ISSUE OR REVISION PURPOSE - DESCRIPTION	A-E	FERNCO	DATE
0	CERTIFIED FOR CONSTRUCTION			

INITIALS AND DATE

UNITED STATES
DEPARTMENT OF ENERGY
FERNALD ENVIRONMENTAL MANAGEMENT PROJECT

THIS DRAWING PREPARED BY
PARSONS
THE RALPH M. PARSONS CO. - PARSONS MAIN, INC. - ENGINEERING-SCIENCE, INC.
CINCINNATI, OHIO

PROJECT NAME
SEEPAGE COLLECTION & REMOVAL OF SEDIMENT
REMOVAL ACTION NO. 30

DRAWING TITLE
LEGEND AND SYMBOLS

DRAWN BY	DATE	LEAD ENGINEER	DATE	CHECKED BY	DATE
K.L. RABBITT	03/08/95			K. GERARD	03/17/95

PLANT/BLDG. NO. | FLOOR | SCALE NONE | CLASS

SUBMITTED FOR APPROVAL | FERNCO CRU APPROVAL

A-E DATE | DATE

DOE PROJECT NO.	FEMP PROJECT NO.	DRAWING MULT CODE NO.	SHEET NO.	REV. NO.
	VBS 1.1.1.1.2.2.6 00-90701	92X-5900-X-00141	X0003	0

PREPARED UNDER PARSONS PROJECT ORDER NUMBER CRU2/P013

R92g00164.m(788.ws412) po139@ws412. Mon Jul 31 15:12:07 CDT 1995

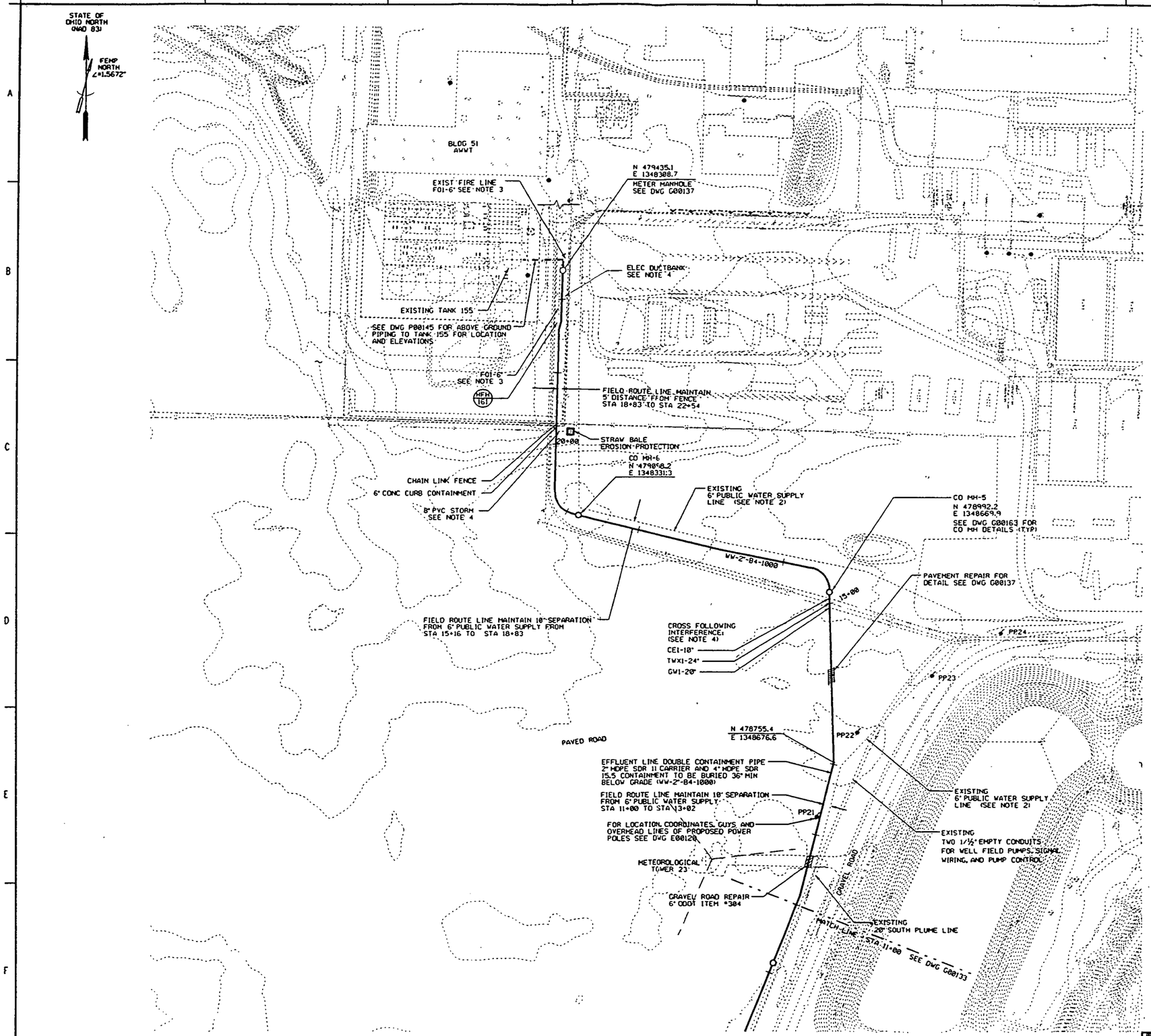

NOTES

1. EXISTING CONDITIONS SHOWN ON THIS DRAWING WERE PREPARED FROM FEMP SITE PROVIDED DATA FROM THE DOCUMENT LISTED BELOW:

   PARSONS TOPOGRAPHY 1992
   FEMP CADD GRID/UTILITY DRAWINGS
   FEMP CONTRACTOR PROJECT DESIGN DOCUMENTS
   B.L. PAYNE, FIELD SURVEY 2/95

2. 6" PUBLIC WATER SUPPLY LINE IDENTIFIED IN FIELD BY POSTED SIGNS AND MAGNETIC TRACE WIRE.

3. THE LOCATION OF UTILITIES AND FEATURES IN THIS AREA ARE APPROXIMATE. EXISTING UNDERGROUND UTILITIES NEED TO BE FIELD LOCATED, HAND PROBE PRIOR TO EXCAVATION TO VERIFY THAT EXCAVATION WILL NOT DISTURB THEM.

4. MAINTAIN 1 FOOT VERTICAL SEPARATION BETWEEN UTILITY LINES, SURFACE FEATURES AND 2" (4") EFFLUENT LINE. REMOVE AND REPLACE EXISTING CHAIN LINK FENCE AND REPAIR EXISTING CONCRETE CURB AFTER INSTALLATION OF THE EFFLUENT PIPE.

7412

REF DWG NO.	DRAWING TITLE
92X-5900-G-00133	PIPELINE PLAN - EFFLUENT LINE SF & IFP
92X-5900-G-00137	SITE DETAILS - GENERAL
92X-5900-G-00163	SITE DETAILS - CLEANOUT MANHOLE
92X-5900-E-00120	PLAN - PROJECT SITE PLAN
92X-5900-P-00145	PIPE SUPPORTS - PLAN AND DETAILS

000071

REV. NO.	ISSUE OR REVISION PURPOSE - DESCRIPTION	A-E	FERNCO	DATE
0	CERTIFIED FOR CONSTRUCTION			

UNITED STATES
DEPARTMENT OF ENERGY
FERNALD ENVIRONMENTAL MANAGEMENT PROJECT

THIS DRAWING PREPARED BY
PARSONS
THE RALPH M. PARSONS CO. - PARSONS MAIN, INC. - ENGINEERING-SCIENCE, INC.
CINCINNATI, OHIO

PROJECT NAME
SEEPAGE COLLECTION & REMOVAL OF SEDIMENT
REMOVAL ACTION NO. 30

DRAWING TITLE
CIVIL
PIPELINE PLAN
EFFLUENT LINE AT AWWT

DRAWN BY	DATE	LEAD ENGINEER	DATE	CHECKED BY	DATE
Y. AFSHAR	3-9-95			K.GERARD	3-28-95

PLANT/BLDG. NO.	FLOOR	SCALE	CLASS
		1"=50'	

SUBMITTED FOR APPROVAL | FERNCO CNU APPROVAL | A-E DATE | DATE

PREPARED UNDER PARSONS PROJECT ORDER NUMBER	COE PROJECT NO.	FEMP PROJECT NO.	DESIGNING FIELD CODE NO.	SHEET NO.	REV. NO.
CRU2/P0139		VBS 1.1.1.1.2.2.6 00-90701	92X-5900-G-00164	G0002	0

R92g00133.m(789.ws412) po139@ws412. Mon Jul 31 15:28:06 CDT 1995

7412

STATE OF OHIO NORTH (NAD 83)
FEMP NORTH ∠=1.5672°

MATCH LINE SEE DWG G00164

SWRB

CO-MH#4
N 478479.35
E 1348544.82

PP20
PP19
10+60 N
PP18
VW-2-84-1008

GRAVEL ROAD REPAIR (6" ODOT ITEM 304)

CO-MH#1
N 478332.29
E 1347516.37

PP3
PP2
PP4
10+00 W
PP5
VW-2-84-1001
PP6
PP7
5+00 W
PP8
PP9
PP10
PP16
PP17
PP15
PP14
PP13
PP12
PP11
PP1

SEE DWG G00136 FOR PIPELINE ROUTING AT WEST PUMP STATION AREA STA 10+30 W TO 12+36 W

WEST PUMP STATION MANHOLE STA 12+13.6 N

18" STORM DRAIN LINE

FIELD ROUTE LINE THROUGH TREE CLEARING FROM STA 0+00 W TO STA 3+60 W

FIELD ROUTE LINE THROUGH AREA MAINTAIN 10' DISTANCE FROM EDGE OF ROAD FROM STA 3+60 W TO CO MH #1

FIELD ROUTE LINE MAINTAIN 10' SEPARATION FROM 6" PUBLIC WATER LINE

CO-MH#2
N 478142.71
E 1347935.06

100' STATION POINT (TYP)

CO-MH#3
N 478092.7
E 1348442.8

EXISTING 6" PUBLIC WATER SUPPLY LINE (SEE NOTE 2)

NOTE STA 5+99 N = 0+00 W

SEE DWG G00163 FOR CO-MH DETAILS (TYP)

EFFLUENT LINE DOUBLE CONTAINMENT PIPE 2" HDPE SDR 11 CARRIER 4" HDPE SDR 15.5 CONTAINMENT TO BE BURIED AT 36" MIN. BELOW GRADE

GRAVEL ROAD REPAIR (6" ODOT ITEM 304)

EXISTING ELECTRICAL CONDUIT

EXISTING 20" SOUTH PLUME LINE

FIELD ROUTE PIPE ALONG EDGE OF GRAVEL ROAD FROM EAST PUMP STATION TO STA 4+50

PROPOSED POWER POLES FOR LOCATION AND COORDINATES, GUYS AND LINE SEE DWG E00120

SEE DWG G00135 FOR EAST PUMP STATION PLAN

EAST PUMP STATION MANHOLE 0+00 N

GRAVEL ROAD REPAIR (6" ODOT ITEM 304)

PREPARED UNDER PARSONS PROJECT ORDER NUMBER CRU2/P0139

NOTES

1. EXISTING CONDITIONS SHOWN ON THIS DRAWING WERE PREPARED FROM FEMP SITE PROVIDED DATA FROM DOCUMENTS LISTED BELOW.

   EXISTING SITE DATA SOURCE (IN PLANT FILES)
   PARSONS TOPOGRAPHY, 1992
   FEMP CADD GRID/UTILITY DRAWINGS
   FEMP CONTRACTOR PROJECT DESIGN DOCUMENTS
   B.L. PAYNE FIELD SURVEY, 1995

2. 6" PUBLIC WATER SUPPLY LINE IDENTIFIED IN FIELD BY POSTED SIGNS AND MAGNETIC TRACE WIRE.

REF DWG NO.	DRAWING TITLE
92X-5900-G-00136	GRADING PLAN - WEST PUMP STATION
92X-5900-G-00135	GRADING PLAN - EAST PUMP STATION
92X-5900-G-00163	SITE DETAILS - CLEANOUT MANHOLE
92X-5900-G-00164	PIPELINE PLAN - EFFLUENT LINE AT AWWT
92X-5900-E-00120	ELECTRICAL - PROJECT SITE PLAN

000072

REV. NO.	ISSUE OR REVISION PURPOSE - DESCRIPTION	A-E	FERNCO	DATE
0	CERTIFIED FOR CONSTRUCTION			

INITIALS AND DATE

UNITED STATES
DEPARTMENT OF ENERGY
FERNALD ENVIRONMENTAL MANAGEMENT PROJECT

THIS DRAWING PREPARED BY
PARSONS
THE RALPH M. PARSONS CO. - PARSONS MAIN, INC. - ENGINEERING-SCIENCE, INC.
CINCINNATI, OHIO

PROJECT NAME
SEEPAGE COLLECTION & REMOVAL OF SEDIMENT
REMOVAL ACTION NO. 30

DRAWING TITLE
CIVIL
PIPELINE PLAN
EFFLUENT LINE SF & IFP

DRAWN BY	DATE	LEAD ENGINEER	DATE	CHECKED BY	DATE
Y. AFHSAR	3-10-95			K. GERARD	3-28-95

PLANT/BLDG NO.	FLOOR	SCALE	CLASS
		1"=50'	

SUBMITTED FOR APPROVAL — A-E DATE
FERNCO CRU APPROVAL — DATE

DOE PROJECT NO.	FEMP PROJECT NO.	DRAWING PROJ CODE NO.	SHEET NO.	REV. NO.
	WBS 1.1.1.1.2.2.6 00-90701	92X-5900-G-00133	G0003	0

R92g00135.m(790.ws412) po139@ws412. Mon Jul 31 15:32:59 CDT 1995

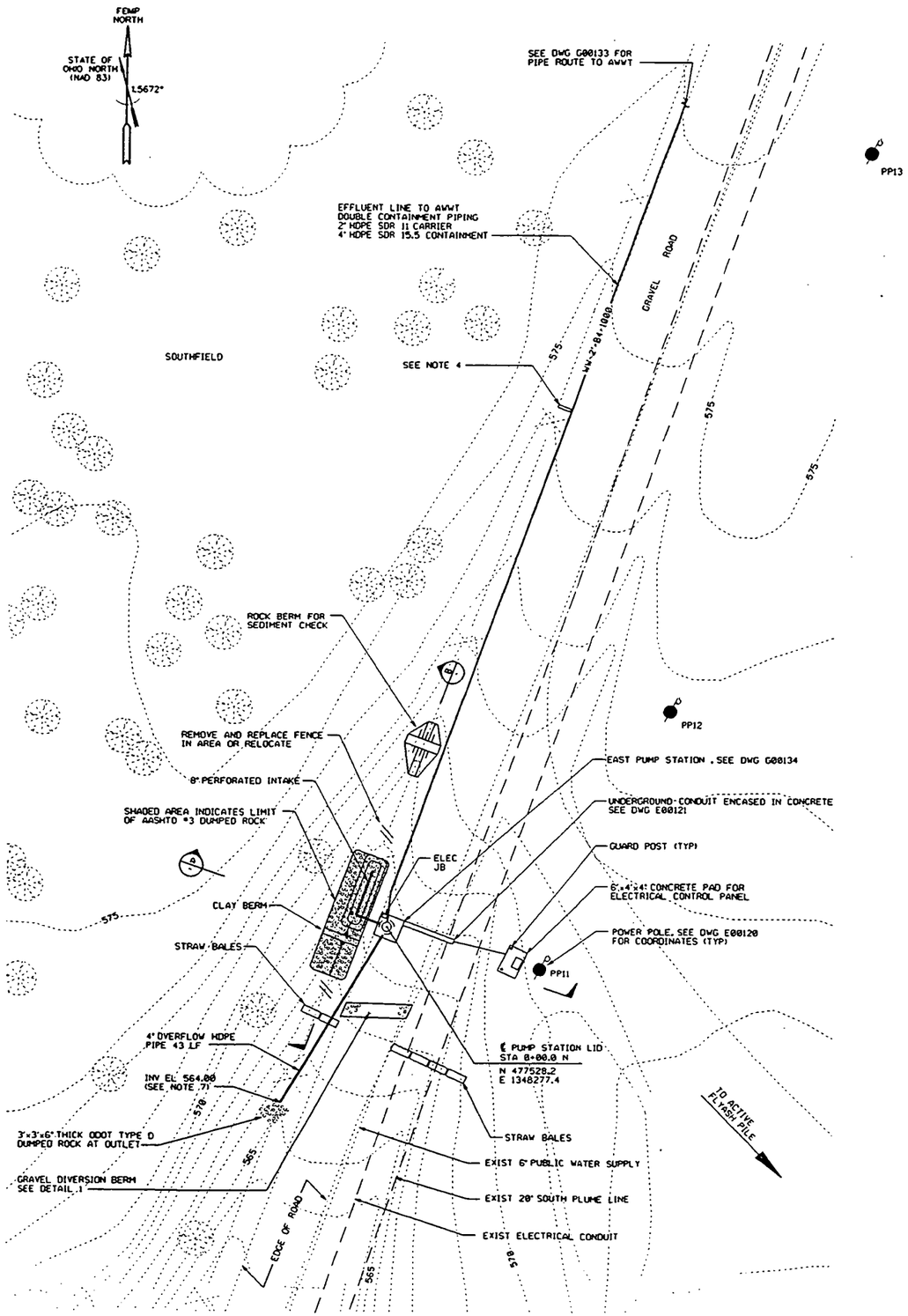

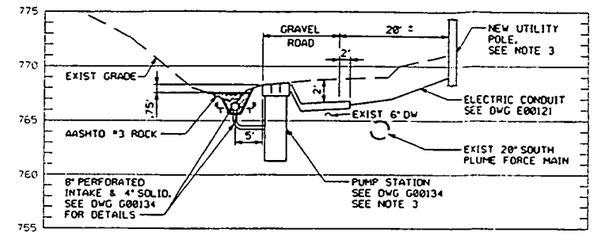

SECTION (A)
1" = 10' H
1" = 5' V

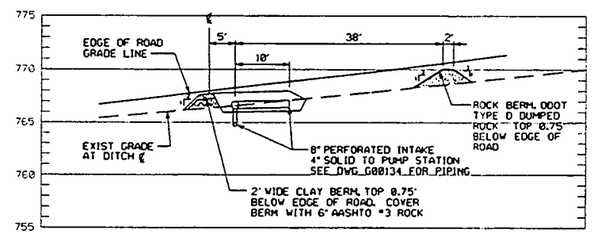

SECTION (B)
1" = 10' H
1" = 5' V

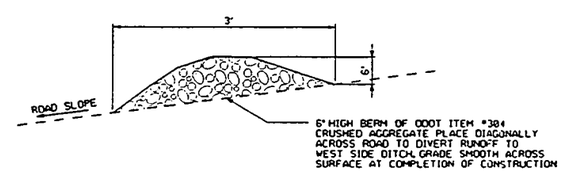

DETAIL (1)
NTS

NOTES

7412

1. FOR DRAWING INDEX, SEE DRAWING 92X-5900-X-00140.
2. EXISTING CONDITIONS SHOWN ON THIS DRAWING WERE PREPARED FROM FEMP SITE PROVIDED DATA FROM THE DOCUMENT LISTED BELOW:

   PARSONS TOPOGRAPHY 1992
   FEMP CADD GRID/UTILITY DRAWINGS
   FEMP CONTRACTOR PROJECT DESIGN DOCUMENTS
   B.L. PAYNE, FIELD SURVEY 2/95.
3. THE EXISTING UNDERGROUND UTILITIES NEEDS TO BE FIELD LOCATED. HAND PROBE PRIOR TO EXCAVATION TO VERIFY THAT EXCAVATION WILL NOT DISTURB THEM.
4. INSTALL STRAW BALE DIKES EVERY 100' ACROSS WEST SIDE DITCH BETWEEN EAST PUMP STATION TO ROAD INTERSECTION.
5. CONCRETE SHALL BE ODOT ITEM 499, TYPE C, 4000 PSI UNLESS OTHERWISE NOTED.
6. FOR POWER POLE LOCATIONS, SEE DRAWING 92X-5900-E-00120.
7. FIELD SURVEY SHOWS DITCH INVERT IS LOWER IN ELEVATION THAN SHOWN (ON AERIAL TOPOGRAPHY) THROUGHOUT AREA. FIELD VERIFY ELEVATION PRIOR TO CONSTRUCTION.

REF DWG NO.	DRAWING TITLE
92X-5900-X-00140	DRAWING INDEX
92X-5900-G-00134	SITE DETAILS - PUMP STATIONS
92X-5900-E-00121	ELECTRICAL - EAST PUMP LOCATION
92X-5900-G-00133	PIPELINE PLAN - EFFLUENT LINE SF AND IFP
92X-5900-E-00120	ELECTRICAL - PROJECT SITE PLAN

000073

REV. NO.	ISSUE OR REVISION PURPOSE - DESCRIPTION	A-E	FERNCO	DATE
0	CERTIFIED FOR CONSTRUCTION			

INITIALS AND DATE

UNITED STATES
DEPARTMENT OF ENERGY
FERNALD ENVIRONMENTAL MANAGEMENT PROJECT

THIS DRAWING PREPARED BY
PARSONS
THE RALPH M. PARSONS CO. - PARSONS MAIN, INC. - ENGINEERING-SCIENCE, INC.
CINCINNATI, OHIO

PROJECT NAME
SEEPAGE COLLECTION & REMOVAL OF SEDIMENT
REMOVAL ACTION NO. 30

DRAWING TITLE
CIVIL
GRADING PLAN
EAST PUMP STATION

DRAWN BY	DATE	LEAD ENGINEER	DATE	CHECKED BY	DATE
R. ESPARZA	3-1-95			E. KUBRIN	3-18-95

PLANT/BLDG NO.	FLOOR	SCALE	CLASS
		1"=10'	

SUBMITTED FOR APPROVAL — A-E — DATE
FERNCO ORU APPROVAL — DATE

DOE PROJECT NO.	FEMP PROJECT NO.	DRAWING REF. CODE NO.	SHEET NO.	REV. NO.
	WBS 1.1.1.1.2.2.6 00-90701	92X-5900-G-00135	G0004	0

PREPARED UNDER PARSONS PROJECT ORDER NUMBER CRU2/P0139

R92g00136.m(791.ws412) po139@ws412. Mon Jul 31 15:40:05 CDT 1995

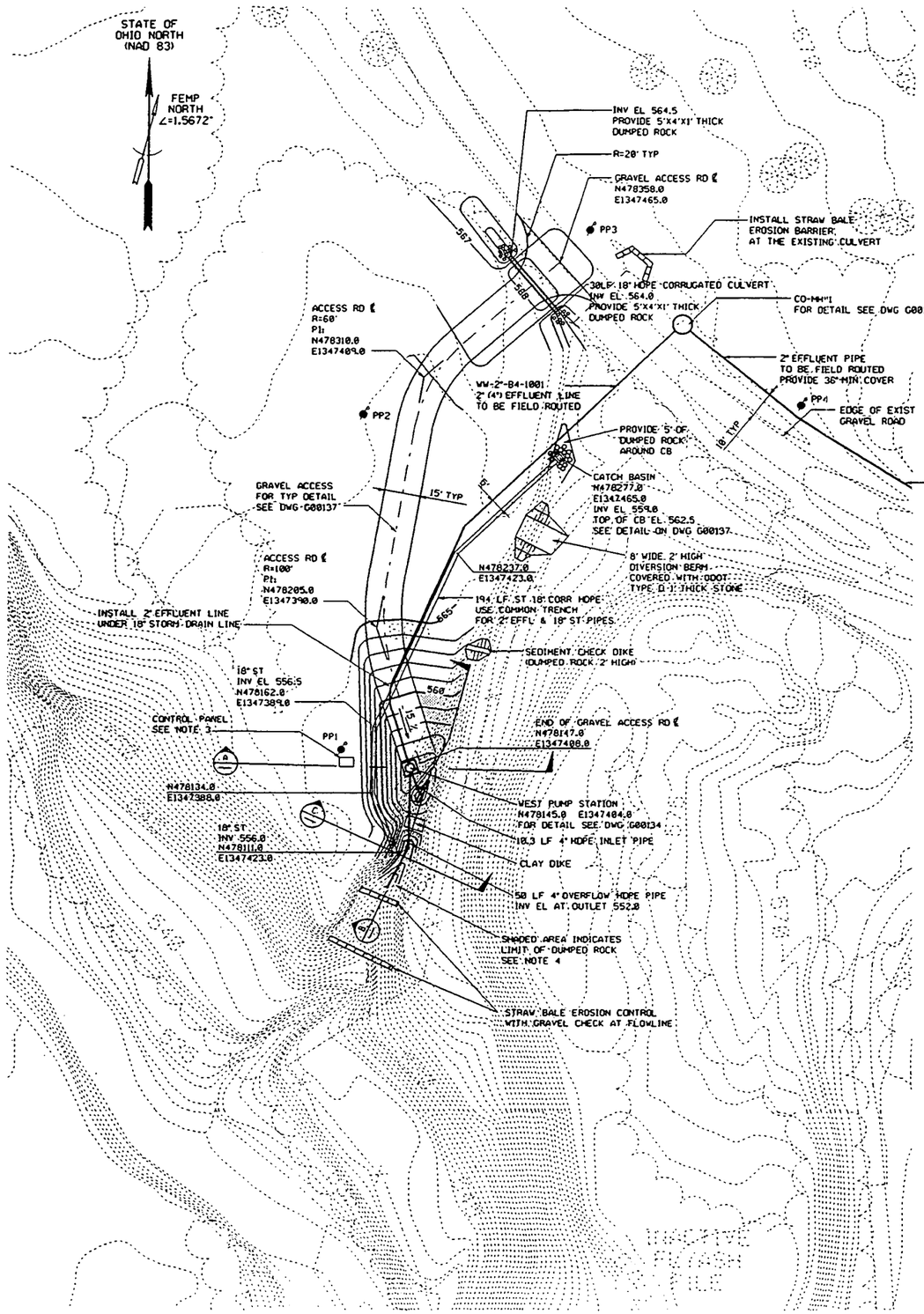

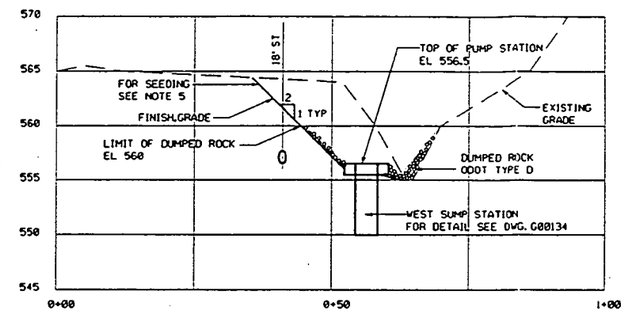

SECTION A
HOR: 1"=10'
VER: 1"=5'

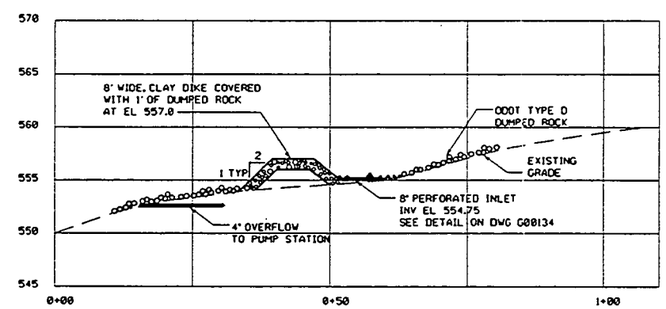

SECTION B
HOR: 1"=10'
VER: 1"=5'

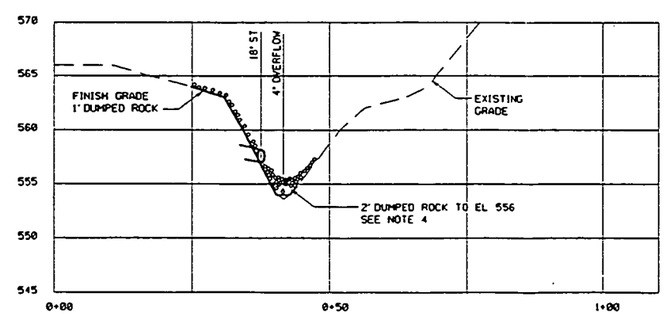

SECTION C
HOR: 1"=10'
VER: 1"=5'

NOTES

1. FOR DRAWING INDEX, SEE DRAWING 92X-5900-X-00140.
2. EXISTING CONDITIONS SHOWN ON THIS DRAWING WERE PREPARED FROM FEMP SITE PROVIDED DATA FROM THE DOCUMENT LISTED BELOW:

   PARSONS TOPOGRAPHY 1992
   FEMP CADD GRID/UTILITY DRAWINGS
   FEMP CONTRACTOR PROJECT DESIGN DOCUMENTS
   B.L. PAYNE, FIELD SURVEY 2/95.
3. FOR POWER POLE LOCATIONS, SEE DRAWING 92X-5900-E-00120. FOR LOCATION OF ELECTRICAL PANNEL SEE DWG 92X-5900-E-00121
4. DUMPED ROCK SHALL BE ODOT ITEM 601.08 TYPE D WITH A MINIMUM THICKNESS OF 1 FT UNLESS OTHERWISE NOTED.
5. HYDRO SEED GRADED AREA ABOVE DUMPED ROCK LIMIT. USE NORTH AMERICAN GREEN STRAW BLANKET (TYPE S75 OR EQUAL) FOR EROSION CONTROL.

7412

REF DWG NO.	DRAWING TITLE
92X-5900-G-00133	PIPELINE PLAN - EFFLUENT LINE SF & IFP
92X-5900-G-00134	SITE DETAILS - PUMP STATIONS
92X-5900-G-00137	SITE DETAILS - GENERAL
92X-5900-E-00120	PLAN - PROJECT SITE PLAN

000074

REV. NO.	ISSUE OR REVISION PURPOSE - DESCRIPTION	A-E	FEMCO	DATE
0	CERTIFIED FOR CONSTRUCTION			

INITIALS AND DATE

UNITED STATES
DEPARTMENT OF ENERGY
FERNALD ENVIRONMENTAL MANAGEMENT PROJECT

THIS DRAWING PREPARED BY
PARSONS
THE RALPH M. PARSONS CO. - PARSONS MAIN, INC. - ENGINEERING-SCIENCE, INC.
CINCINNATI, OHIO

PROJECT NAME
SEEPAGE COLLECTION & REMOVAL OF SEDIMENT
REMOVAL ACTION NO. 30

DRAWING TITLE
CIVIL
GRADING PLAN
WEST PUMP STATION

DRAWN BY	DATE	LEAD ENGINEER	DATE	CHECKED BY	DATE
Y. AFSHAR	2-28-95			K. GERARD	3-28-95

PLANT/BLDG. NO.	FLOOR	SCALE	CLASS
		1"=20'	

SUBMITTED FOR APPROVAL — AE — DATE
FEMCO ONJ APPROVAL — DATE

PREPARED UNDER PARSONS PROJECT ORDER NUMBER	DOE PROJECT NO.	FEMP PROJECT NO.	DRAWING INDEX CODE NO.	SHEET NO.	REV. NO.
CRU2/P0139		WBS 1.1.1.1.2.2.6 00-90701	92X-5900-G-00136	G0005	0

R92g00134.m(792.ws412) po139@ws412. Mon Jul 31 15:46:56 CDT 1995

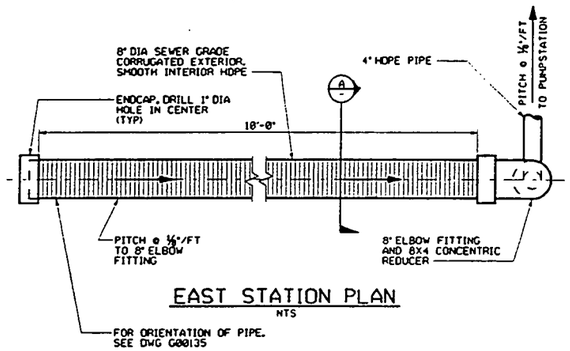

EAST STATION PLAN
NTS

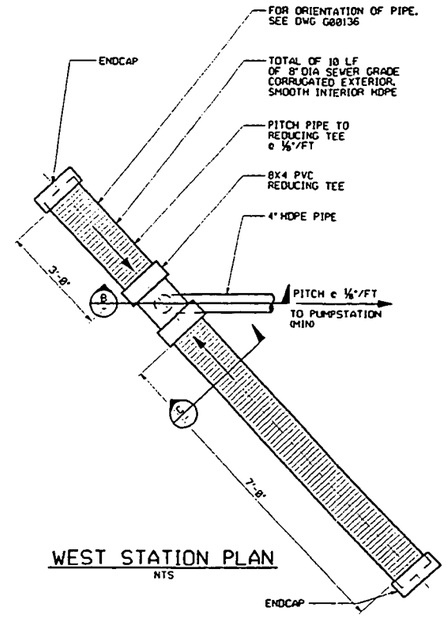

WEST STATION PLAN
NTS

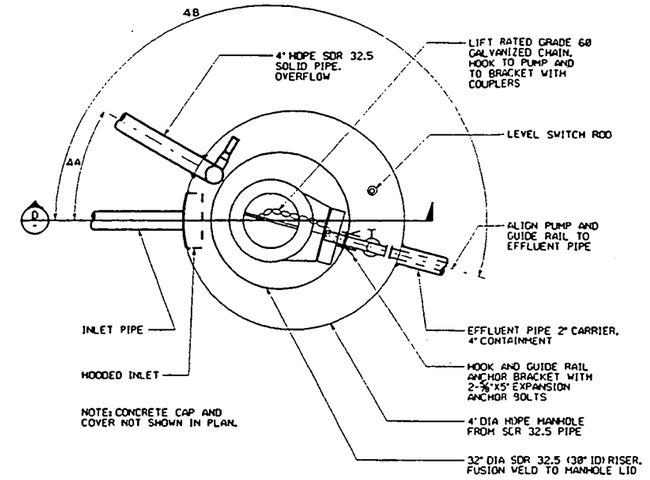

NOTE: CONCRETE CAP AND COVER NOT SHOWN IN PLAN.

TYPICAL PUMP MANHOLE PLAN
1"=1'-0"

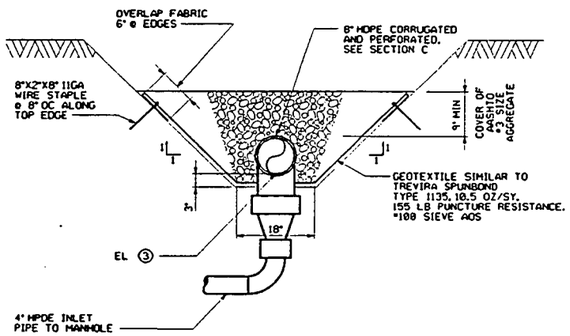

EAST STATION SECTION (A)
NTS

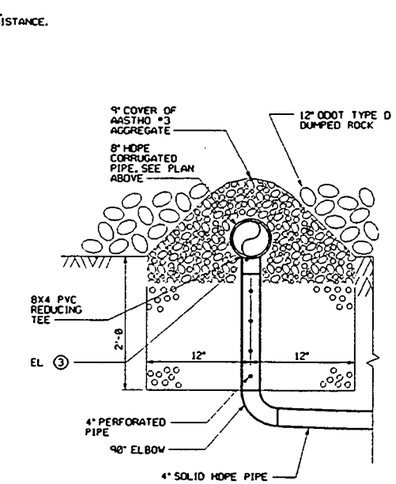

WEST STATION SECTION (B)
NTS

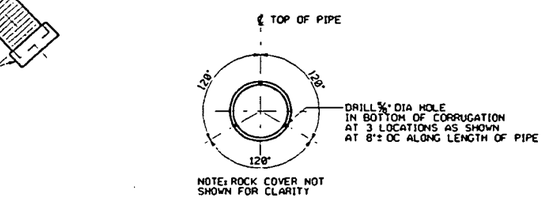

NOTE: ROCK COVER NOT SHOWN FOR CLARITY

SECTION (C)
1½"=1'-0"

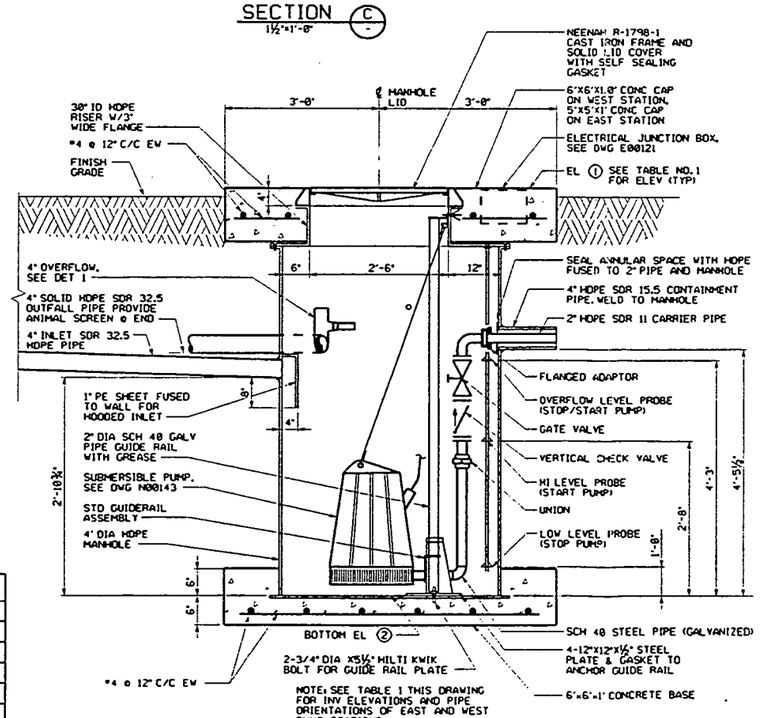

NOTE: SEE TABLE 1 THIS DRAWING FOR INV ELEVATIONS AND PIPE ORIENTATIONS OF EAST AND WEST PUMP STATIONS.

TYPICAL PUMP STATION MANHOLE SECTION (D)
NTS

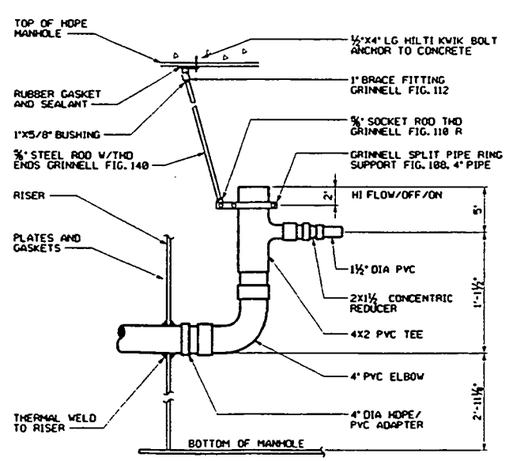

DETAIL (1)
1½"=1'-0"

TABLE NO. 1		
	EAST PUMP STA	WEST PUMP STA
ELEV ①	568.50	556.50
ELEV ②	561.50	550.00
ELEV ③	566.08	554.75
ΔA	280°-15'	21'
ΔB	72°-24'	183'

NOTES

GENERAL:

1. UNLESS OTHERWISE NOTED ALL MATERIALS SHALL CONFORM TO THE STATE OF OHIO DEPARTMENT OF TRANSPORTATION (ODOT) CONSTRUCTION AND MATERIAL SPECIFICATIONS DATED JANUARY 1, 1995.
2. AGGREGATE TO BE ODOT ITEM 703, AASHTO M43 AT THE SIZE INDICATED.

PIPE:

3. HDPE CORRUGATED PIPE SHALL BE SIMILAR TO ADVANCED DRAINAGE SYSTEMS (ADS) N-12 PIPE (SMOOTH INTERIOR, CORRUGATED EXTERIOR). FITTINGS TO BE COMPATIBLE WITH PIPE.
4. DUAL CONTAINMENT PIPE SHALL BE HDPE MATERIALS. SEE SPECIFICATIONS DWG 92X-5900-G-00173.
5. PENETRATIONS TO MANHOLE ARE TO BE WATERTIGHT. USE GASKETS OR THERMAL FUSE PIPE TO WALL.
6. PVC SHALL BE SCHEDULE 40 ASTM D1784 MATERIAL UNLESS OTHERWISE NOTED.

CONCRETE:

7. ODOT ITEM 499, CLASS C 4000 PSI AT 28 DAYS.
8. TOP SLOPE OF CONCRETE CAP AT EAST PUMP STATION SHALL MATCH EXISTING SLOPE OF ROAD.
9. EAST STATION SHALL HAVE NO. 6 REBAR AT 6" OC EACHWAY 2" FROM BOTTOM. REBAR TO BE ASTM A615, 60 KSI YIELD GRADE.
10. FOR DRAWING INDEX, SEE DRAWING 92X-5900-X-00140.
11. FOR VALVE SPECIFICATIONS, SEE DRAWING 92X-5900-G-00163.

7412

REF DWG NO.	DRAWING TITLE
92X-5900-X-00140	DRAWING INDEX
92X-5900-G-00135	GRADING PLAN - EAST PUMP STATION
92X-5900-G-00136	GRADING PLAN - WEST PUMP STATION
92X-5900-E-00121	PLANS
92X-5900-N-00143	PIPING AND INSTRUMENTATION DIAGRAM

000075

REV. NO.	ISSUE OR REVISION PURPOSE - DESCRIPTION	A-E	FERNCO	DATE
0	CERTIFIED FOR CONSTRUCTION			

UNITED STATES DEPARTMENT OF ENERGY
FERNALD ENVIRONMENTAL MANAGEMENT PROJECT

THIS DRAWING PREPARED BY
PARSONS
THE RALPH M. PARSONS CO. - PARSONS MAIN, INC. - ENGINEERING-SCIENCE, INC.
CINCINNATI, OHIO

PROJECT NAME
SEEPAGE COLLECTION & REMOVAL OF SEDIMENT
REMOVAL ACTION NO. 30

DRAWING TITLE
CIVIL
SITE DETAILS
PUMP STATIONS

DRAWN BY	DATE	LEAD DISCIPLINE	DATE	CHECKED BY	DATE
K.L. RABBITT	10-01-95			K. GERARD	03/28/95

M. INITIALS/DC NO.	FLOOR	SCALE	CLASS
		AS SHOWN	

SUBMITTED FOR APPROVAL: FERNCO CRU APPROVAL:

A-E DATE DOE PROJECT NO. | FERNCO DATE TEMP PROJECT NO. WBS 1.1.1.1.2.2.6 00-90701 | DRAWING INDEX CODE NO. 92X-5900-G-00134 | SHEET NO. G0006 | REV. NO. 0

PREPARED UNDER PARSONS PROJECT ORDER NUMBER CRU2/P0139

R92g00137.m(793.ws412) po139@ws412. Mon Jul 31 15:49:09 CDT 1995

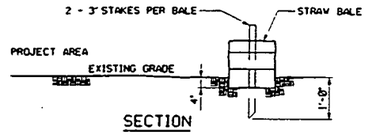

STRAW BALE EROSION CONTROL DETAIL
NTS

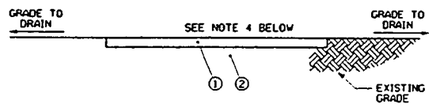

CRUSHED AGGREGATE ACCESS ROAD DETAIL
NTS

1. ODOT ITEM 304 STABILIZED CRUSHED AGGREGATE (1-6" COURSE).
2. COMPACT EXISTING GRADE TO 95% STANDARD PROCTOR.
3. SLOPE TO HAVE POSITIVE DRAINAGE.
4. WIDTH VARIES. SEE DIMENSIONS ON DRAWINGS.

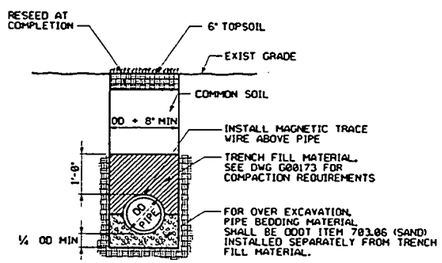

PIPE BEDDING DETAIL
NTS

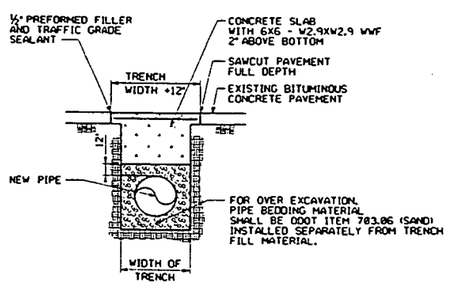

PAVEMENT REPAIR DETAIL
NTS

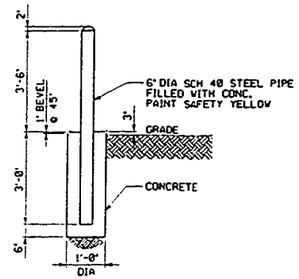

EXTERIOR GUARD POST DETAIL
NTS

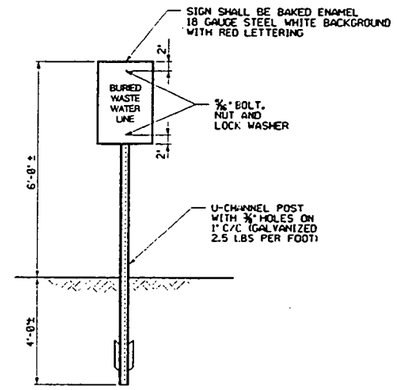

PIPE LINE SIGN DETAIL
NTS

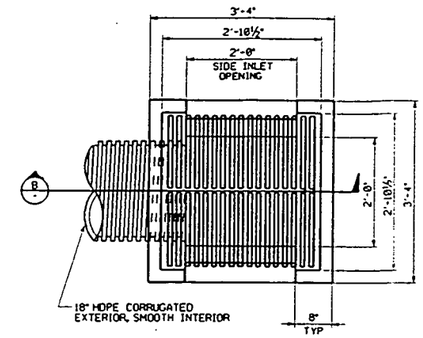

PLAN
NTS

NOTE: SEE DWG G 00136 FOR ELEVATIONS AND LOCATION

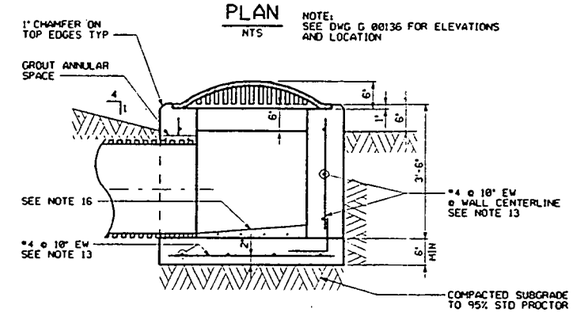

SECTION B
NTS

CATCH BASIN DETAIL

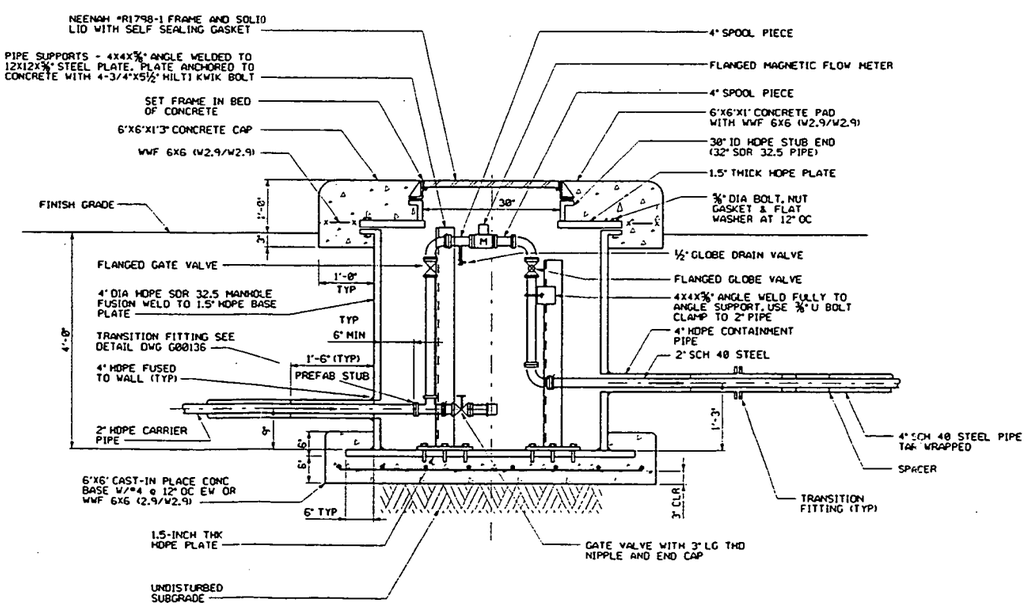

METER MANHOLE
NTS

NOTE: ALL PIPE & VALVES IN MANHOLE TO BE HEAT TRACED, INSULATED & JACKETED (SEE NOTE 8 DWG P00145)

NOTES 7412

GENERAL:

1. FOR DRAWING INDEX, SEE DRAWING 92X-5900-X-00140.
2. UNLESS OTHERWISE NOTED, ALL MATERIALS SHALL CONFORM TO THE STATE OF OHIO DEPARTMENT OF TRANSPORTATION (ODOT) CONSTRUCTION AND MATERIAL SPECIFICATIONS DATED JANUARY 1, 1993.
3. CONCRETE SHALL BE ODOT ITEM 499, CLASS C (4000 PSI AT 28 DAYS) UNLESS NOTED OTHERWISE.
4. SEE NOTE 1 ON DWG 92X-5900-G-00173.

SEDIMENT CONTROL NOTES:

5. UNLESS OTHERWISE NOTED, ALL MATERIALS AND WORK SHALL CONFORM TO ODOT ITEM 207.
6. INSPECT SEDIMENT CONTROL MEASURES AFTER EACH RAINFALL AND AT LEAST DAILY DURING PROLONGED RAINFALL. MAKE REPAIRS TO DAMAGED BALES, END RUNS, AND UNDERCUTTING OF THE BALES. REPLACE OR SUPPLEMENT BALES AS NECESSARY.
7. REMOVE SEDIMENT BUILDUP WHEN THE LEVEL OF DISPOSITION IS APPROXIMATELY ONE-HALF THE HEIGHT OF THE BARRIER.
8. APPLY CLEAN WATER TO CONTROL FUGITIVE DUST.
9. IF A DISTURBED AREA WILL NOT BE ACTIVELY WORKED ON FOR A PERIOD GREATER THAN 20 DAYS, IT SHALL BE TEMPORARILY SEEDED AND MULCHED.
10. STRAW BALES TO BE USED WHEN NATURAL GROUND IS LEVEL OR SLOPING AWAY FROM PROJECT.
11. PLACE STRAW BALES APPROXIMATELY PARALLEL TO BOTTOM OF FILL SLOPE.
12. STRAW BALES SHALL BE STANDARD SIZE 18" x 18" x 48".

CATCH BASIN NOTES:

13. CATCH BASIN SHALL BE PRECAST CONCRETE PER ODOT ITEM 499 CLASS C, 4000 PSI AT 28 DAYS AND SHALL MEET ODOT ITEM 706.13 REQUIREMENTS WITH 6 ± 2% AIR VOID CONTENT REINFORCING TO BE ASTM A615, 60 KSI YIELD GRADE. REINFORCING TO BE CONTINUOUS AT CORNERS. ALL LAPS 1'-4".
14. GRATE SHALL BE HEAVY DUTY, BEE HIVE SHAPE, WITH 600 SQUARE INCHES OF OPENING. SIMILAR TO EAST JORDAN IRON WORKS NO. 6610. DIMENSIONS OF INLET ARE BASED ON THIS GRATE. CHANGES IN GRATE MAY REQUIRE CHANGES TO THE INLET. ANY CHANGES SHALL BE APPROVED BY FERMCO CONSTRUCTION CONTRACTS MANAGER PRIOR TO ORDERING, FABRICATION OR INSTALLATION OF ANY ITEM.
15. OPENINGS FOR PIPE SHALL BE OD +2".
16. THE OUTLET PIPE MAY BE PLACED ON TOP OF BOTTOM SLAB WITH THE BOTTOM SHAPED TO DRAIN WITH GROUT.
17. INVERT OF THE OUTLET PIPE IS 559.00'.
18. PROTECT PIPE AND CATCH BASIN FROM SILTATION DURING CONSTRUCTION BY INSTALLING STRAW BALE EROSION CONTROL BARRIER AROUND BASIN/PIPE INLET.

REF DWG NO.	DRAWING TITLE
92X-5900-G-00140	DRAWING INDEX
92X-5900-G-00136	GRADING PLAN - WEST PUMP STATION
92X-5900-G-00173	SPECIFICATIONS
92X-5900-G-00163	SITE DETAILS
92X-5900-P-00145	PIPE SUPPORTS

000076

REV. NO.	ISSUE OR REVISION PURPOSE - DESCRIPTION	A-E	FERMCO	DATE
0	CERTIFIED FOR CONSTRUCTION			

UNITED STATES DEPARTMENT OF ENERGY
FERNALD ENVIRONMENTAL MANAGEMENT PROJECT

THIS DRAWING PREPARED BY
PARSONS
THE RALPH M. PARSONS CO. - PARSONS MAIN, INC. - ENGINEERING-SCIENCE, INC.
CINCINNATI, OHIO

PROJECT NAME
SEEPAGE COLLECTION & REMOVAL OF SEDIMENT
REMOVAL ACTION NO. 30

DRAWING TITLE
CIVIL
SITE DETAILS
GENERAL

DRAWN BY	DATE	LEAD ENGINEER	DATE	CHECKED BY	DATE
K.L. RABBITT	10-06-95			E. KUBRIN	03/18/95

PLANT/BLDG NO. | FLOOR | SCALE: AS SHOWN | CLASS

SUBMITTED FOR APPROVAL | FERMCO CRU APPROVAL | A-E | DATE | DATE

PREPARED UNDER PARSONS PROJECT ORDER NUMBER	DOE PROJECT NO.	FTMP PROJECT NO.	DRAWING INDEX CODE NO.	SHEET NO.	REV. NO.
CRU2/P0139		VBS 1.1.1.1.2.2.6 00-90701	92X-5900-G-00137	G0007	0

R92g00163.m(794.ws412) po139@ws412. Mon Jul 31 15:51:05 CDT 1995

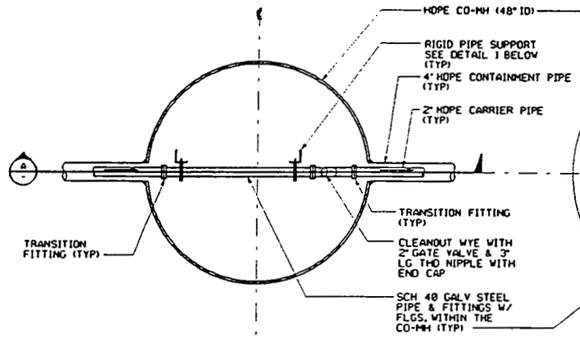

TYPE 1

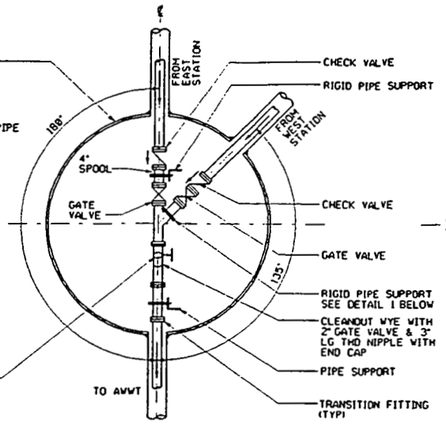

TYPE 2

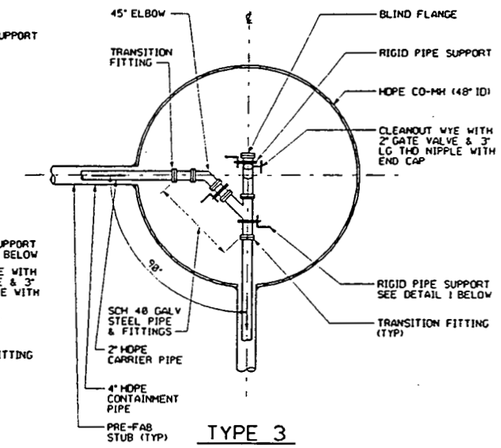

TYPE 3

TYPICAL CLEANOUT MANHOLE PLANS

1"=1'-0"

NOTE: SEE TABLE 1 FOR TYPE CLEANOUT OF SPECIFIC CO-MH

TABLE NO. 1		
CLEAN OUT MANHOLE (CO MH)		
CO-MH#	PLAN TYPE	VALVE ARRANGEMENT #
1	3	SEE PLAN
2	1	1
3	2	SEE PLAN
4	1	1
5	1	1
6	1	1

NOTES

GENERAL:

1. FOR DRAWING INDEX, SEE DRAWING 92X-5900-X-00140.
2. CONNECT HOSE TO END AND RELIEVE STATIC HEAD PRESSURE INTO TANK PRIOR TO CLEAN OUT OPERATIONS.
3. FINAL DIMENSION OF LENGTH OF STEEL FITTINGS AND VALVES IN THE MANHOLES WILL VARY DUE TO EXPANSION AND CONTRACTION OF HDPE PIPE. PIPE AND MANHOLE SHOULD BE BURIED FOR 5 DAYS BEFORE SETTING FITTINGS AND ANCHOR SUPPORTS. EACH MANHOLE WILL NEED A SEPARATE MEASUREMENT.
4. THE FOLLOWING VALVE SPECIFICATIONS ARE:

   CHECK - BALL CHECK, CLASS 125, FLANGED, SIMILAR TO FLYGT HDL VALVE MODEL.

   GATE - IRON BODY, RISING STEM, CLASS 125, FLANGED, 150 PSI WOG.

   GLOBE - IRON BODY, BRONZE TRIM, YOKE BONNET, CLASS 125 FLANGED.
5. FUSION WELD BY MANUFACTURER ALL PIPE PENETRATIONS TO HDPE MANHOLE.
6. CONCRETE SHALL BE ODOT TYPE F, 3000 PSI. REBAR SHALL BE 60 KSI YIELD STRENGTH.

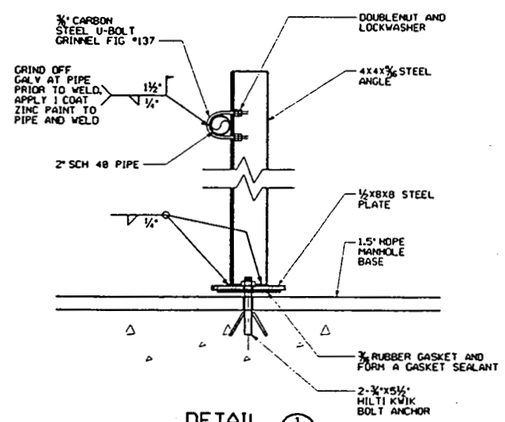

DETAIL 1

NTS

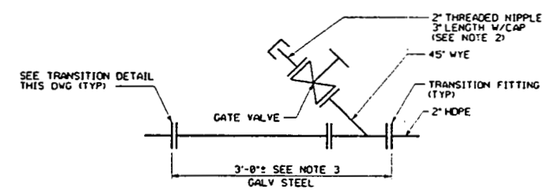

CO-MH VALVE ARRANGEMENT #1

NTS

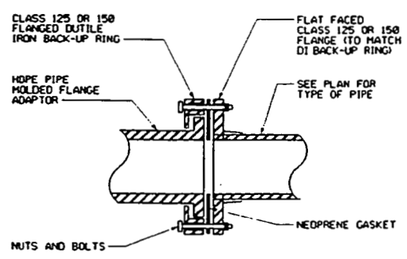

TRANSITION FITTING DETAIL

NTS

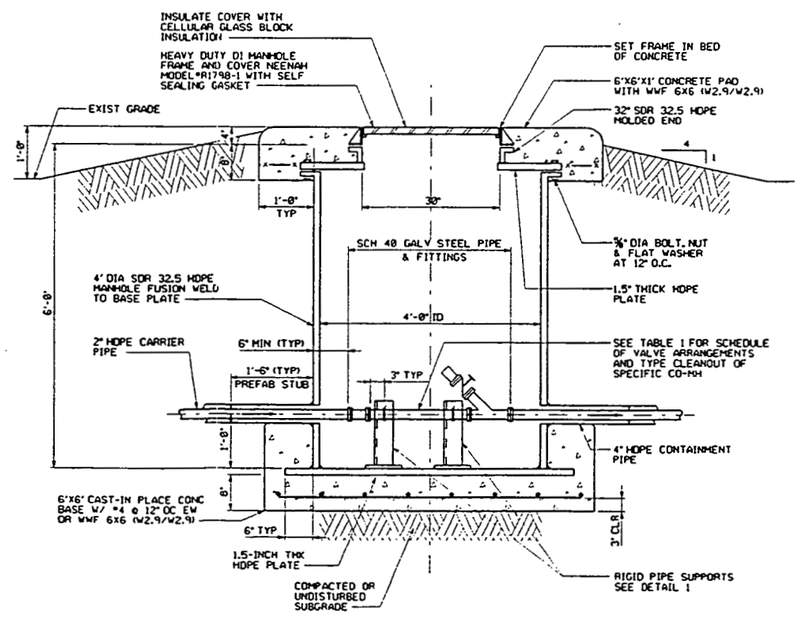

TYPICAL CLEANOUT - MANHOLE (CO-MH) SECTION A

1"=1'-0"

REF DWG NO.	DRAWING TITLE
92X-5900-X-00140	DRAWING INDEX
92X-5900-G-00137	SITE DETAILS

000077

REV. NO.	ISSUE OR REVISION PURPOSE - DESCRIPTION	A-E	FERNCO	DATE
0	CERTIFIED FOR CONSTRUCTION			

UNITED STATES DEPARTMENT OF ENERGY
FERNALD ENVIRONMENTAL MANAGEMENT PROJECT

THIS DRAWING PREPARED BY
PARSONS
THE RALPH M. PARSONS CO. - PARSONS MAIN, INC. - ENGINEERING-SCIENCE, INC.
CINCINNATI, OHIO

PROJECT NAME
SEEPAGE COLLECTION & REMOVAL OF SEDIMENT
REMOVAL ACTION NO. 30

DRAWING TITLE
CIVIL
SITE DETAILS
CLEANOUT - MANHOLE

DRAWN BY	DATE	LEAD DRAFTER	DATE	CHECKED BY	DATE
K.L. RABBITT	10-18-95			K. GERARD	11/15/95

PLANT/BLDG. NO.	FLOOR	SCALE	CLASS
		AS NOTED	

SUBMITTED FOR APPROVAL: A-E DATE
FERNCO CRU APPROVAL: DATE

DOE PROJECT NO.	TEMP PROJECT NO.	DRAWING SUBJ CODE NO.	SHEET NO.	REV. NO.
	WBS 1.1.1.1.2.2.6 00-90701	92X-5900-G-00163	G0008	0

PREPARED UNDER PARSONS PROJECT ORDER NUMBER CRU2/P0139

R92p00145.m(796.ws412) po139@ws412. Mon Jul 31 15:55:26 CDT 1995

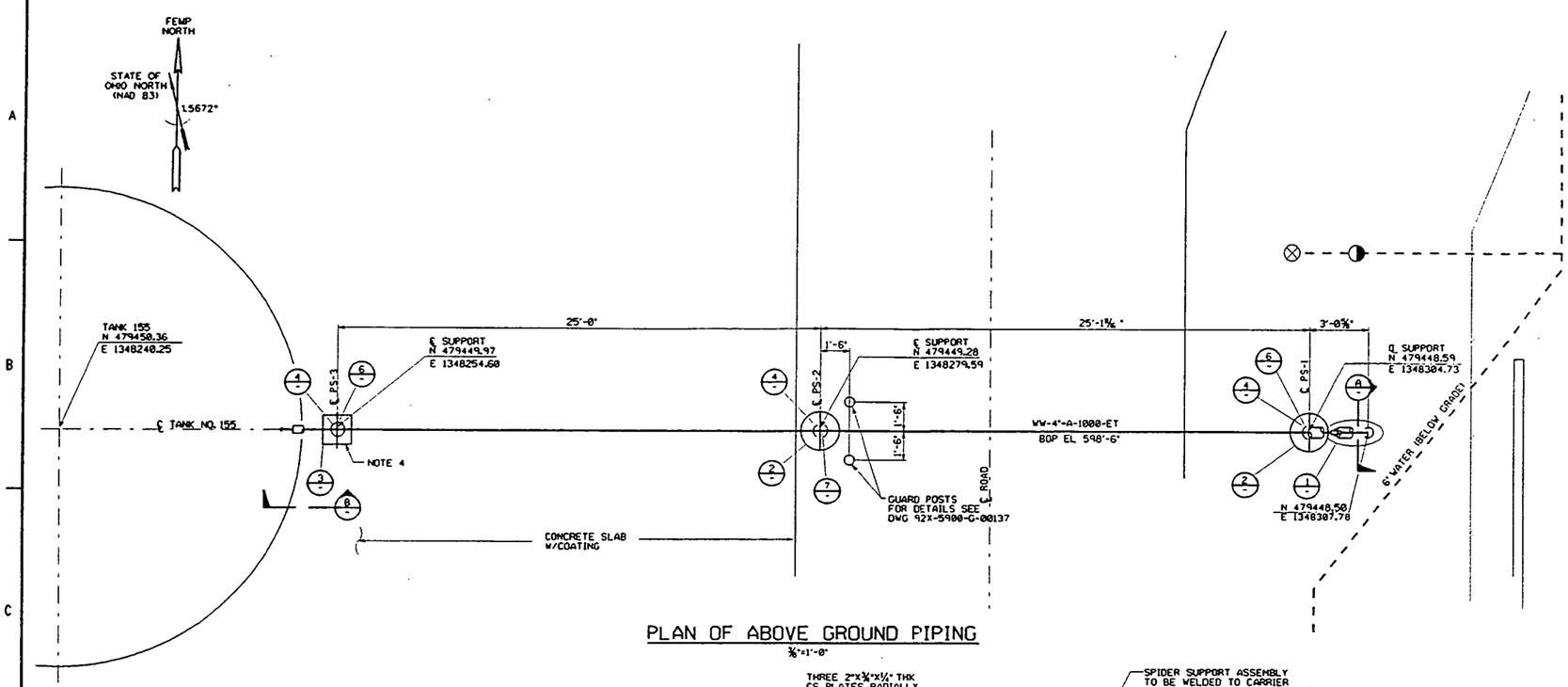

PLAN OF ABOVE GROUND PIPING

⅜"=1'-0"

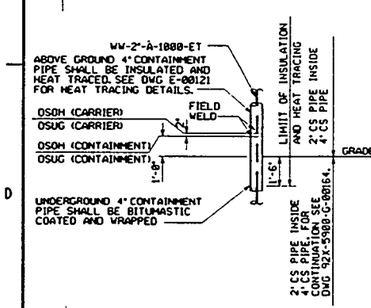

SECTION A
⅜"=1'-0"

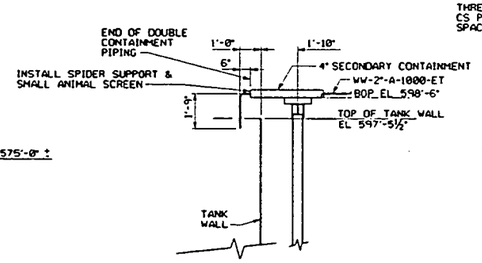

SECTION B
⅜"=1'-0"

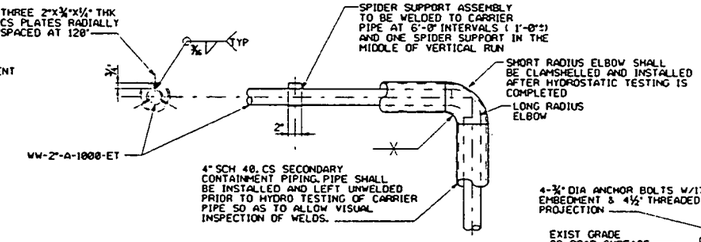

DETAIL 1
NTS

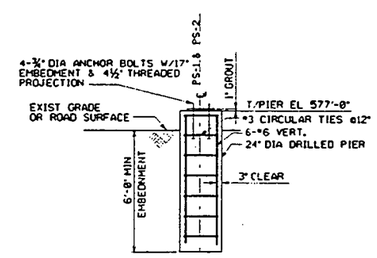

DETAIL 2
NTS

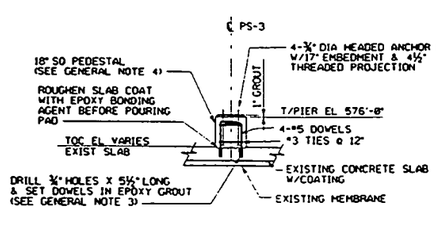

DETAIL 3
NTS

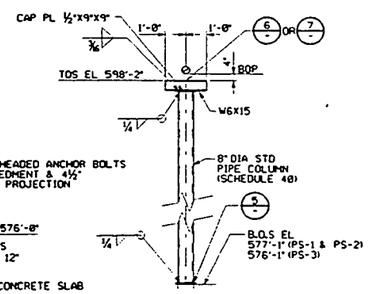

DETAIL 4
LOOKING WEST
NTS

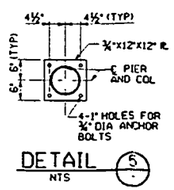

DETAIL 5
NTS

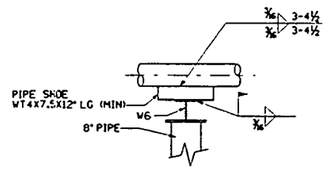

DETAIL 7
NTS
@ PS-2

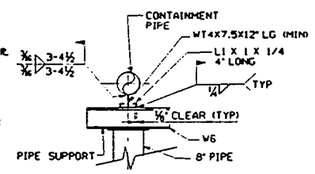

DETAIL 6
NTS
@ PS-1 AND PS-3

NOTES

GENERAL NOTES

1. FOR DRAWING INDEX SEE DRAWING 92X-5900-X-00140.
2. FOR PROCESS AND INSTRUMENT FLOW DIAGRAM SEE DRAWING 92X-5900-N-00143.
3. DOWEL BARS SHALL BE SET WITH CERAMIC 6 EPOXY GROUT BY RAMSET. MIXED AND PLACED IN ACCORDANCE WITH MANUFACTURER'S INSTRUCTIONS.
4. AFTER INSTALLATION OF CONCRETE PEDESTAL. COATING TO BE REPAIRED BY FERMCO.

PIPING SPECIFICATION NOTES

5. MATERIALS. CODE A:
   CARRIER AND CONTAINMENT PIPE SHALL BE SEAMLESS. CARBON STEEL ASTM A-53. GRADE A SCHEDULE 40. BEVELED ENDS.
   FITTINGS SHALL BE SEAMLESS CARBON STEEL BUTTWELD. ASTM A234. GRADE WPB. ELBOWS SHALL BE SHORT RADIUS.
6. FABRICATION:
   ALL WELDING ELECTRODES SHALL BE IN ACCORDANCE WITH AWS A5.1.
   CONTAINMENT PIPING SHALL BE INSTALLED AND LEFT UNWELDED UNTIL HYDROSTATIC TESTING OF THE CARRIER PIPE IS COMPLETE. PIPE SPOOLS SHALL BE ARRANGED TO INSURE VISUAL ACCESS TO CARRIER PIPE WELDS.
7. TESTING:
   CARRIER PIPE SHALL BE HYDROSTATICALLY TESTED TO 130 PSIG. THE TEST PRESSURE SHALL BE MAINTAINED FOR A MINIMUM OF TEN MINUTES PRIOR TO VISUAL INSPECTION.
   CONTAINMENT PIPING SHALL BE PNEUMATICALLY TESTED AT 15 PSI FOR A SOAP BUBBLE LEAK TEST.
8. INSULATION:
   CONTAINMENT PIPING SHALL BE INSULATED WITH 1½" OF PRE-FORMED FIBERGLASS BLOCK AND BOARD INSULATION CONFORMING TO ASTM C547/C612. INSULATED PIPE SHALL BE JACKETED WITH CORRUGATED ALUMINUM ALLOY 3003-H18. CONFORMING TO ASTM B209.

GENERAL STEEL NOTES

9. DESIGN, FABRICATION, AND ERECTION OF STRUCTURAL STEEL SHALL BE IN ACCORDANCE WITH AISC MANUAL OF STEEL CONSTRUCTION, NINTH EDITION.
10. MATERIAL SHALL MEET THE REQUIREMENTS OF THE FOLLOWING SPECIFICATIONS:
    STRUCTURAL STEEL - ASTM A36
    STRUCTURAL PIPE - ASTM A53, GRADE B
    ANCHOR BOLTS - ASTM A36 WITH HEAVY HEX NUTS AND WASHERS.
    WELDING - AWS D1.1 CLASS E70XX (ELECTRODES)
    VISUALLY INSPECT ALL WELDS
    NON-DESTRUCTIVE TEST 50% OF WELDS
11. SHOP AND FIELD PAINTING SPECIFICATION:
    A) PREPARE SURFACES IN ACCORDANCE WITH STEEL STRUCTURES PAINTING COUNCIL (SSPC) SP-6.
    B) PRIME ALL BARE METAL NOT IN CONTACT WITH CONCRETE/GROUT WITH ZINC-RICH, LEAD FREE PRIMER. APPLY TWO-COATS OF EXTERIOR LATEX GLOSS ENAMEL FOR THE FINISH COAT. FOLLOW SSPC PAINT 13 AND PAINT 20.

GENERAL CONCRETE NOTES

12. DESIGN, MATERIAL AND WORKMANSHIP SHALL BE IN ACCORDANCE WITH ACI 318-89.
13. CONCRETE SHALL HAVE A MINIMUM COMPRESSIVE STRENGTH OF 3000 PSI AT 28 DAYS.
14. REINFORCING STEEL SHALL CONFORM TO ASTM A615, GRADE 60.
15. FOUNDATION DESIGN IS BASED ON ASSUMED NET SOIL BEARING PRESSURE ALLOWABLE OF 2000 PSF. IF ANY SOFT, WET, ORGANIC, OR LOOSE SOIL OR ANY OLD FILL IS ENCOUNTERED, THE FERMCO CONSTRUCTION CONTRACTS MANAGER SHALL BE INFORMED AND THE CONDITIONS RESOLVED BEFORE CONTINUATION OF THE PROJECT.

REF DWG NO.	DRAWING TITLE
92X-5900-X-00140	DRAWING INDEX
92X-5900-N-00143	PIPING AND INSTRUMENT DIAGRAM
92X-5900-G-00164	CIVIL SITE PIPELINE PLAN
92X-5900-E-00121	ELECTRICAL PLANS
92X-5900-G-00137	CIVIL SITE DETAILS, GENERAL

000078

REV. NO.	ISSUE OR REVISION PURPOSE - DESCRIPTION	A-E	FERMCO	DATE
0	CERTIFIED FOR CONSTRUCTION			

INITIALS AND DATE

UNITED STATES DEPARTMENT OF ENERGY
FERNALD ENVIRONMENTAL MANAGEMENT PROJECT

THIS DRAWING PREPARED BY
PARSONS
THE RALPH M. PARSONS CO. - PARSONS MAIN, INC. - ENGINEERING-SCIENCE, INC.
CINCINNATI, OHIO

PROJECT NAME
SEEPAGE COLLECTION & REMOVAL OF SEDIMENT
REMOVAL ACTION NO. 30

DRAWING TITLE
PIPING /PLANT DESIGN
PIPE SUPPORTS-PLAN AND DETAILS
SOUTH FIELD/FLYASH SEEPAGE COLLECTION SYSTEM

DRAWN BY	DATE	LEAD ENGINEER	DATE	CHECKED BY	DATE
K.MEISNER	10-19-95			R. PERDON	3-21-95

PLANT/BLDG. NO.	FLOOR	SCALE	CLASS
		AS NOTED	

SUBMITTED FOR APPROVAL — A-E — DATE
FERMCO CRU APPROVAL — DATE

PREPARED UNDER PARSONS PROJECT ORDER NUMBER	DOE PROJECT NO.	FEMP PROJECT NO.	DRAWING INDEX CODE NO.	SHEET NO.	REV. NO.
CRU2/P0139		VBS 1.1.1.1.2.2 00-90701	92X-5900-P-00145	P0001	0

R92g00173.m(795.ws412) po139@ws412. Mon Jul 31 15:52:38 CDT 1995

GENERAL

1. THE LISTING OF EQUIPMENT SUPPLIERS OR MATERIALS IN NO WAY PRECLUDES THE USE OF ALTERNATE SUPPLIERS OR MATERIALS FOR ANY ITEM TO BE FURNISHED WITHIN THE SCOPE OF THIS WORK. THE ITEMS AND SUPPLIERS SPECIFIED IS INTENDED TO IDENTIFY THE TYPE OF EQUIPMENT AND GENERAL QUALITY OF THAT EQUIPMENT. IT IS THE OFFERER'S RESPONSIBILITY TO PROPOSE EQUIPMENT THAT IS BEST SUITED FOR THIS PROJECT IN COMBINED TERMS OF QUALITY AND PRICE.

2. UNLESS OTHERWISE NOTED, ALL MATERIALS AND WORK SHALL CONFORM TO OHIO DEPARTMENT OF TRANSPORTATION (ODOT) CONSTRUCTION AND MATERIAL SPECIFICATIONS, DATED JANUARY 1, 1995

3. EXCESS CONSTRUCTION MATERIAL, DEBRIS AND WASTE SHALL BE DISPOSED OF IN ACCORDANCE WITH SITE STANDARD OPERATING PROCEDURE, SSOP-0044, MANAGEMENT OF SOIL, DEBRIS AND WASTE FROM PROJECT.

4. SUBCONTRACTOR SHALL FIELD VERIFY ALL LOCATIONS, DIMENSIONS, AND ELEVATIONS AND DISCREPANCIES SHALL BE RESOLVED PRIOR TO STARTING WORK. FERMCO SHALL PROVIDE AS-BUILT DRAWINGS INCLUDING INVERT AND TOP ELEVATIONS OF ALL CATCH BASINS, PUMP STATIONS, AND CLEAN OUTS AT COMPLETION OF CONSTRUCTION. AS-BUILT DRAWINGS WILL INCLUDE A FIELD RUN SURVEY PERFORMED BY A SURVEYOR REGISTERED IN THE STATE OF OHIO.

5. REFER TO THE PLANS AND DETAIL SHEETS FOR ADDITIONAL INFORMATION. FOR DRAWING INDEX, SEE DRAWING 92X-5900-X-00140.

DIVISION 2: SITE AND CIVIL ENGINEERING

02100 SITE CLEARING

PART 1 GENERAL

1.1 SITE CLEARING SHALL BE CLEARING, GRUBBING, SCALPING, REMOVAL OF TREES AND STUMPS, REMOVAL AND DISPOSING OF ALL VEGETATION AND DEBRIS, AND ROUGH GRADING OF SOIL WITHIN CONSTRUCTION LIMITS SHOWN.

1.2 IT WILL ALSO INCLUDE THE INSTALLATION OF PERIMETER SEDIMENT CONTROL MEASURES.

PART 2 MATERIAL
NOT USED

PART 3 EXECUTION

3.1 SEDIMENT CONTROL

A. INSTALL PERIMETER SEDIMENT CONTROL PRIOR TO ANY MASS CLEARING, GRUBBING, OR ROUGH GRADING.

3.2 CLEARING

A. REMOVE ONLY TREES, SHRUBS, STUMPS, AND VEGETATION AFFECTED WITHIN CONSTRUCTION LIMITS.

B. REMOVE FENCES, CURB, AND OTHER SURFACE FEATURES ALONG THE PROPOSED FORCE MAIN ROUTE NEAR THE AWWT. PROVIDE FOR TEMPORARY BARRIERS. FENCE MATERIAL SHALL BE SALVAGED TO THE EXTENT POSSIBLE AND TEMPORARILY STORED ON SITE IN A DESIGNATED AREA. REPLACE OR REPAIR FEATURES DISTURBED.

3.3 ROUGH GRADING

A. FERMCO CONSTRUCTION MANAGER WILL PROVIDE HORIZONTAL AND VERTICAL CONTROL POINTS. THE CONTRACTOR SHALL PROTECT THESE CONTROL POINTS THROUGHOUT CONSTRUCTION AND REPLACE THEM IF DAMAGED.

B. PROVIDE GRAVEL ROAD ACCESS TO WORK AREAS. THIS INCLUDES CONSTRUCTION ACCESS TO THE EXISTING ROADWAYS.

C. STRIP AND SALVAGE TOPSOIL SEPARATLY FROM SUBSOIL. SALVAGED TOPSOIL SHALL BE STOCKPILED IN AN AREA DESIGNATED BY THE FERMCO CONSTRUCTION CONTRACTS MANAGER AND PROTECTED FROM EROSION.

02200 EARTHWORK

PART 1 GENERAL

1.1 EARTHWORK SHALL INCLUDE EXCAVATION, TRENCHING, AND GRADING.

PART 2 MATERIAL
NOT USED

PART 3 EXECUTION

3.1 PREPARATION

A. THE SUBCONTRACTOR IS RESPONSIBLE FOR ALL EARTHWORK LAYOUT. VERIFY THAT SURVEY BENCHMARKS AND INTENDED ELEVATIONS FOR THE WORK ARE AS INDICATED.

B. IDENTIFY AND FLAG KNOWN UTILITY LOCATIONS WHICH EXIST IN THE CONSTRUCTION AREA. HAND PROBE TO LOCATE UNDERGROUND UTILITIES FOR ALL UTILITY POLE EXCAVATIONS, POLE GUY WIRE ANCHORS, EAST AND WEST PUMP STATIONS, AND FOR ALL UTILITY LINE CROSSINGS. PROVIDE PROTECTION FOR ALL UTILITIES IN THE WORK AREA.

C. THE SUBCONTRACTOR SHALL NOTIFY THE FERMCO CONSTRUCTION CONTRACTS MANAGER WHEN ACTUAL CONDITIONS DIFFER THAN SPECIFIED ON THE PLANS OR WHEN UNUSUAL OR UNSUITABLE SOIL CONDITIONS ARE ENCOUNTERED. THE PROBLEM SHALL BE RESOLVED PRIOR TO CONTINUING WORK.

D. SCHEDULE AND EXECUTE WORK SO THAT VEHICLE ACCESS IS MAINTAINED AT ALL TIMES THROUGH THE WORK ZONES TO THE EXTENT POSSIBLE.

E. INSTALL SEDIMENT CONTROL PRIOR TO EXCAVATION AND ROUGH GRADING. MAINTAIN CONTROLS THROUGHOUT CONSTRUCTION.

3.2 ERECTION/INSTALLATION/APPLICATION

A. EXCAVATION:

1. EXCAVATE SUBSOIL REQUIRED TO ACCOMMODATE PUMP STATIONS, ROADWAYS, REMOVAL OF SEDIMENT, AND TO ACHIEVE FINAL PROPOSED GRADE.

2. HAND TRIM EXCAVATION FOR PUMP STATIONS MANHOLES. REMOVE LOOSE MATERIAL.

3. SLOPE BANKS TO ANGLE OF REPOSE OR LESS, UNLESS SHORED.

4. STOCKPILE EXCESS SOIL ON SITE AT A LOCATION DESIGNATED BY THE FERMCO CONSTRUCTION CONTRACTS MANAGER. PROTECT THE STOCKPILE FROM EROSION.

5. CONTROL WATER BY MEANS OF DITCHES, CHECK DAMS, TEMPORARY PUMPS AND PIPING, OR OTHER METHODS ACCEPTABLE TO THE FERMCO CONSTRUCTION CONTRACTS MANAGER.

6. GRADING OF THE PROPOSED 2 HORIZONTAL:1 VERTICAL WESTERN SLOPE SOUTH FROM THE WEST PUMP STATION IS SENSITIVE AT THE TRANSITION IN TO THE EXISTING STEEP SLOPE. EXTREME CARE IS NECESSARY IN GRADING THIS AREA FOR WORKER SAFETY AND TO PREVENT ADDITIONAL SLOPE DEGRADATION.

B. TRENCHING:

1. CUT TRENCHES SUFFICIENTLY WIDE TO ENABLE INSTALLATION OF UTILITIES AND ALLOW INSPECTION. TRENCHES FOR PIPE LESS THAN 6 INCHES IN DIAMETER MAY BE EXCAVATED USING A TRENCHING MACHINE. FOLLOW PIPE MANUFACTURERS RECOMMENDATIONS.

2. HAND TRIM AS NECESSARY AND LEAVE FREE OF LOOSE MATTER.

C. BACKFILLING:

1. NO BACKFILL SHALL BE PLACED AROUND ANY CONCRETE STRUCTURE UNTIL IT HAS ATTAINED SATISFACTORY STRENGTH.

2. CUT OUT SOFT AREAS OF SUBGRADE NOT CAPABLE OF IN SITU COMPACTION. BACKFILL WITH ODOT ITEM 411 AND COMPACT TO DENSITY EQUAL TO OR GREATER THAN SUBSEQUENT FILL MATERIAL.

3. USE UNFROZEN AND UNSATURATED MATERIALS, PLACED IN CONTINUOUS LAYERS NOT EXCEEDING 8 INCHES LOOSE DEPTH. MAINTAIN OPTIMUM MOISTURE CONTENT, WITHIN 3 PERCENT, OF BACKFILL MATERIALS TO OBTAIN COMPACTION DENSITY. A LEAN CONCRETE, MINIMUM COMPRESSIVE STRENGTH OF 2,000 PSI MAY BE USED TO CORRECT OVER EXCAVATION.

4. FOR SOIL COMPACTION, MAINTAIN MOISTURE CONTENT, PLUS OR MINUS 3 PERCENT, OF OPTIMUM MOISTURE TO ATTAIN A MINIMUM DENSITY OF 95 PERCENT STANDARD PROCTOR, ASTM D698, AT ROAD CROSSINGS, MANHOLES, AND PUMP STATIONS, AND 90 PERCENT STANDARD PROCTOR AT ALL OTHER AREAS.

D. ADJUSTING AND CLEANING:

1. GRADING, FILLING, AND TOPSOIL TO BE PLUS OR MINUS 1 INCH OF INDICATED GRADE. RESHAPE AND RE-COMPACT FILLS SUBJECTED TO VEHICULAR TRAFFIC TO FINAL GRADE.

2. REMOVE SOIL STOCKPILES, LEAVING THE AREA IN A CLEAN AND NEAT CONDITION. GRADE AND STABILIZE SITE SURFACE TO PREVENT FREE STANDING SURFACE WATER.

02270 EROSION AND SEDIMENT CONTROL

PART 1 GENERAL

1.1 SECTION INCLUDES

A. THE INSTALLATION AND MAINTENANCE OF EROSION AND SEDIMENT CONTROL MEASURES.

B. TEMPORARY AND PERMANENT SEEDING.

1.2 SYSTEM DESCRIPTION

A. ITEMS TO BE PROTECTED FROM SEDIMENT DEPOSITS SHALL INCLUDE DOWN STREAM PROPERTY, WATERWAYS, STREAMS, CATCH BASINS, DITCHES, CULVERTS, AND GUTTERS

B. SUBCONTRACTOR SHALL INSTALL, MAINTAIN, AND REMOVE TEMPORARY EROSION AND SEDIMENT CONTROL MEASURES. REMOVAL REQUIRES THE APPROVAL OF THE FERMCO CONSTRUCTION MANAGER.

PART 2 MATERIAL

2.1 THE SEED MIXTURE INDICATED BELOW, BY WEIGHT, SHALL BE APPLIED AT 3 POUNDS PER 1000 SQUARE FEET, SOWN DRY OR HYDRAULICALLY.

40 PERCENT KENTUCKY BLUEGRASS (POA PRATENSIS)
40 PERCENT CREEPING RED FESCUE (FESTUCA RUBRA)
20 PERCENT ANNUAL RYEGRASS (LOLIUM MULTIFLORUM)

2.2 COMMERCIAL FERTILIZER SHALL BE 12-12-12 APPLIED AT 20 POUNDS PER 1000 SQUARE FEET.

2.3 AGRICULTURAL LIMING MATERIAL AND APPLICATION SHALL CONFORM TO ODOT ITEM 659.

2.4 POTABLE WATER SHALL BE USED TO CONTROL FUGITIVE DUST.

PART 3 EXECUTION

3.1 PREPARATION

A. PREPARE SUBSOIL TO ELIMINATE UNEVEN AREAS AND LOW SPOTS. MAINTAIN LINES, LEVELS, PROFILES, AND CONTOURS. MAKE CHANGES GRADUAL AND BLEND SLOPES INTO LEVEL AREAS. SCARIFY SUBSOIL TO A DEPTH OF 3 INCHES WHERE TOPSOIL IS TO BE PLACED.

B. REMOVE DEBRIS, WEEDS, ROOTS, AND UNDESIRABLE PLANTS. REMOVE CONTAMINATED SUBSOIL.

3.2 ERECTION/INSTALLATION/APPLICATION

A. PLACE TOPSOIL TO A DEPTH OF 4 INCHES PLUS OR MINUS 1 INCH AND RAKE SMOOTH.

B. APPLY FERTILIZER, SEED, AND MULCH PER ODOT ITEM 659. IF SOIL CONDITIONS NECESSITATE, ADD LIME PER ODOT ITEM 659.

C. SEDIMENT CONTROL

1. INSTALL EROSION AND SEDIMENT CONTROL MEASURES AND SEEDING PER ODOT ITEMS 207 AND 659.

2. PERIMETER SEDIMENT CONTROL MEASURES ARE TO BE INSTALLED PRIOR TO ANY CLEARING OR EARTHWORK.

3. THROUGHOUT THE PROJECT, OTHER SEDIMENT CONTROL MEASURES, SUCH AS STRAW BALES AROUND CATCH BASINS, DITCH CHECK, TEMPORARY SEEDING, ETC., ARE TO BE INSTALLED WHEN REQUIRED.

02720 SITE DRAINAGE AND SLOPE PROTECTION

PART 1 GENERAL

1.1 SITE DRAINAGE SHALL INCLUDE THE PROPOSED STORM DRAINS, THEIR APPURTENANCES, AND THEIR OUTFALL.

1.2 SITE DRAINAGE SHALL INCLUDE THE SEEPAGE INLET PIPE AT THE PUMP STATION MANHOLES.

1.3 SLOPE PROTECTION SHALL INCLUDE FILTER FRABIC AND SLOPE PROTECTION MATERIALS.

PART 2 MATERIAL

2.1 STORM DRAIN PIPE AND BENDS TO BE HDPE, CORRUGATED EXTERIOR, SMOOTH INTERIOR, SIMILAR TO ADVANCED DRAINAGE SYSTEMS (ADS) TYPE N-12.

2.2 SEEPAGE INLET PIPE SHALL BE HDPE SIMILAR TO ADS TYPE N-12.

2.3 FILTER FABRIC TO BE SIMILAR TO TREVIRA SPUNBOND TYPE 1125.

2.4 SLOPE PROTECTION MATERIAL SHALL BE AS SHOWN ON THE DRAWINGS.

2.5 JOINT FOR PIPES GREATER THAN 12 INCHES DIAMETER SHALL CONSIST OF CORRUGATED POLYETHYLENE SPLIT COUPLINGS WILTH CLOSED CELL NEOPRENE STRIPS THAT COMPLY WITH ASTM D1056. ALL PIPE FITTINGS SHALL MEET AASHTO M 294 STANDARDS.

2.6 JOINTS FOR PIPES LESS THAN 12 INCHES DIAMETER SHALL BE MADE WITH ADS N-12 PVC GASKETED SEWER GRADE FITTINGS.

PART 3 EXECUTION

3.1 PREPARATION

A. HAND TRIM EXCAVATIONS AND REMOVE LOOSE MATERIAL. CORRECT OVEREXCAVATION.

3.2 ERECTION/INSTALLATION/APPLICATION

A. INSTALL PIPE IN ACCORDANCE WITH MANUFACTURER'S RECOMMENDATIONS. CONNECT PIPE WITH SPECIFIED MATERIALS.

B. PIPES ARE TO BE CUT SQUARELY AND CLEANLY SO AS NOT TO ADVERSELY AFFECT JOINING. PIPE END SHALL BE FLUSH WITH THE INTERIOR FACE OF THE CATCH BASIN.

C. ALL COMPACTED BACKFILL SHALL BE INORGANIC MATERIAL, FREE OF ROCK OR GRAVEL OVER 3 INCHES AND FREE OF OTHER UNSUITABLE MATERIAL. BACKFILL COMPACTION TO BE 95 PERCENT STANDARD PROCTOR.

D. STONE FOR SLOPE AND CHANNEL PROTECTION SHALL BE INSTALLED IN ACCORDANCE WITH ODOT ITEM 601.

02730 SEEPAGE SYSTEM

PART 1 GENERAL

1.1 SEEPAGE SYSTEM INCLUDES THE MANHOLE FOR THE PUMP STATION, CLEANOUT AND METER MANHOLES, AND THE EFFLUENT PIPE TO THE AWWT.

1.2 THE PUMPS, CONTROLS, AND PIPING INSIDE THE PUMP STATIONS SHALL BE AS SHOWN ON DRAWING 92X-5900-G-00134.

PART 2 MATERIALS

2.1 EFFLUENT PIPE SHALL BE DUAL CONTAINMENT HDPE, DRISCOPIPE 1000 SERIES, AS MANUFACTURED BY PHILLIPS DRISCOPIPE, INC., NO SPACERS FOR BELOW GRADE PIPING. INLET AND OUTFALL PIPE SHALL BE HDPE DRISCOPIPE 1000 SERIES PIPE.

2.2 PUMP STATION, CLEANOUT MANHOLE, AND METER MANHOLE RISERS SHALL BE HDPE PERMACORE PIPE AS MANUFACTURED BY PHILLIPS DRISCOPIPE, INC. WALL THICKNESS AND SDR SHALL BE AS SHOWN ON THE DRAWINGS.

2.3 STEEL PLATE AND SHAPES SHALL BE ASTM A36 WITH ONE COAT TNEMEC SERIES 4 VERSARE PRIMER AND ONE COAT TNEMEC SERIES 6 TNEME-CRYL TOPCOAT.

2.4 OTHER MATERIALS ARE AS NOTED ON THE PLANS AND DETAILS.

PART 3 EXECUTION

3.1 PREPARATION

A. THE SUBCONTRACTOR SHALL BE RESPONSIBLE FOR LAYOUT.

B. EXISTING UTILITIES SHALL BE LOCATED AND PROTECTED PRIOR TO ANY EXCAVATION.

C. HAND TRIM EXCAVATIONS AND REMOVE LOOSE MATERIAL.

3.2 ERECTION/INSTALLATION/APPLICATION

A. JOINTS FOR HDPE MATERIAL SHALL BE FUSION WELDED.

B. CARRIER PIPE TO BE HYDROSTATICALLY TESTED AT 130 PSI UNLESS OTHERWISE NOTED. MAINTAIN PRESSURE FOR TWO HOURS. NO LEAKAGE ALLOWED.

C. INSTALL PIPE AND MANHOLES IN ACCORDANCE WITH THE MANUFACTURER'S RECOMMENDATIONS. USE ODOT ITEM 703.06, SAND, FOR BEDDING WHEN NATIVE SUBSOIL OF TRENCH BOTTOM IS UNSUITABLE OR FOR OVER EXCAVATION BACKFILL.

D. INSTALL WARNING BURIED EFFLUENT LINE SIGNS EVERY 250 FEET AND AT THE BEGINNING, MIDPOINT, AND END OF CURVES, BETWEEN CLEANOUT MANHOLES.

E. COMPACT BACKFILL AS SPECIFIED IN SECTION 02200, EARTHWORK.

F. MAINTAIN A 10-FOOT SEPARATION BETWEEN EXISTING POTABLE WATER LINE AND THE EFFLUENT LINE.

NOTES: 7412

1. FOR DRAWING INDEX, SEE DRAWING 92X-5900-X-00140.
2. ALL DRAWINGS CONTAIN ADDITIONAL SPECIFICATIONS AND INFORMATION.

REF DWG NO.	DRAWING TITLE
92X-5900-X-00140	DRAWING INDEX
92X-5900-G-00134	SITE DETAILS - PUMP STATIONS

000079

REV. NO.	ISSUE OR REVISION PURPOSE - DESCRIPTION	A-E	FERMCO	DATE
0	CERTIFIED FOR CONSTRUCTION			

INITIALS AND DATE

UNITED STATES
DEPARTMENT OF ENERGY
FERNALD ENVIRONMENTAL MANAGEMENT PROJECT

THIS DRAWING PREPARED BY
PARSONS
THE RALPH M. PARSONS CO. - PARSONS MAIN, INC. - ENGINEERING-SCIENCE, INC.
CINCINNATI, OHIO

PROJECT NAME
SEEPAGE COLLECTION & REMOVAL OF SEDIMENT
REMOVAL ACTION NO. 30

DRAWING TITLE
CIVIL
SPECIFICATIONS

DRAWN BY	DATE	LEAD ENGINEER	DATE	CHECKED BY	DATE
K. GERARD	03-17-95			E. KUBRDI	03/28/95

PLANT/BLDG. NO.	FLOOR	SCALE	CLASS
		NONE	

SUBMITTED FOR APPROVAL — A-E — DATE
FERMCO CRU APPROVAL — DATE

PROPOSED UNDER PARSONS PROJECT ORDER NUMBER	DOE PROJECT NO.	FEMP PROJECT NO.	DRAWING INDEX CODE NO.	SHEET NO.	REV. NO.
CRU2/PO139		WBS 1.1.1.1.2.2.6 00-90701	92X-5900-G-00173	G0009	0

R92e00120.m(253.ws323) po139@ws323. Tue Jul 25 09:19:43 CDT 1995

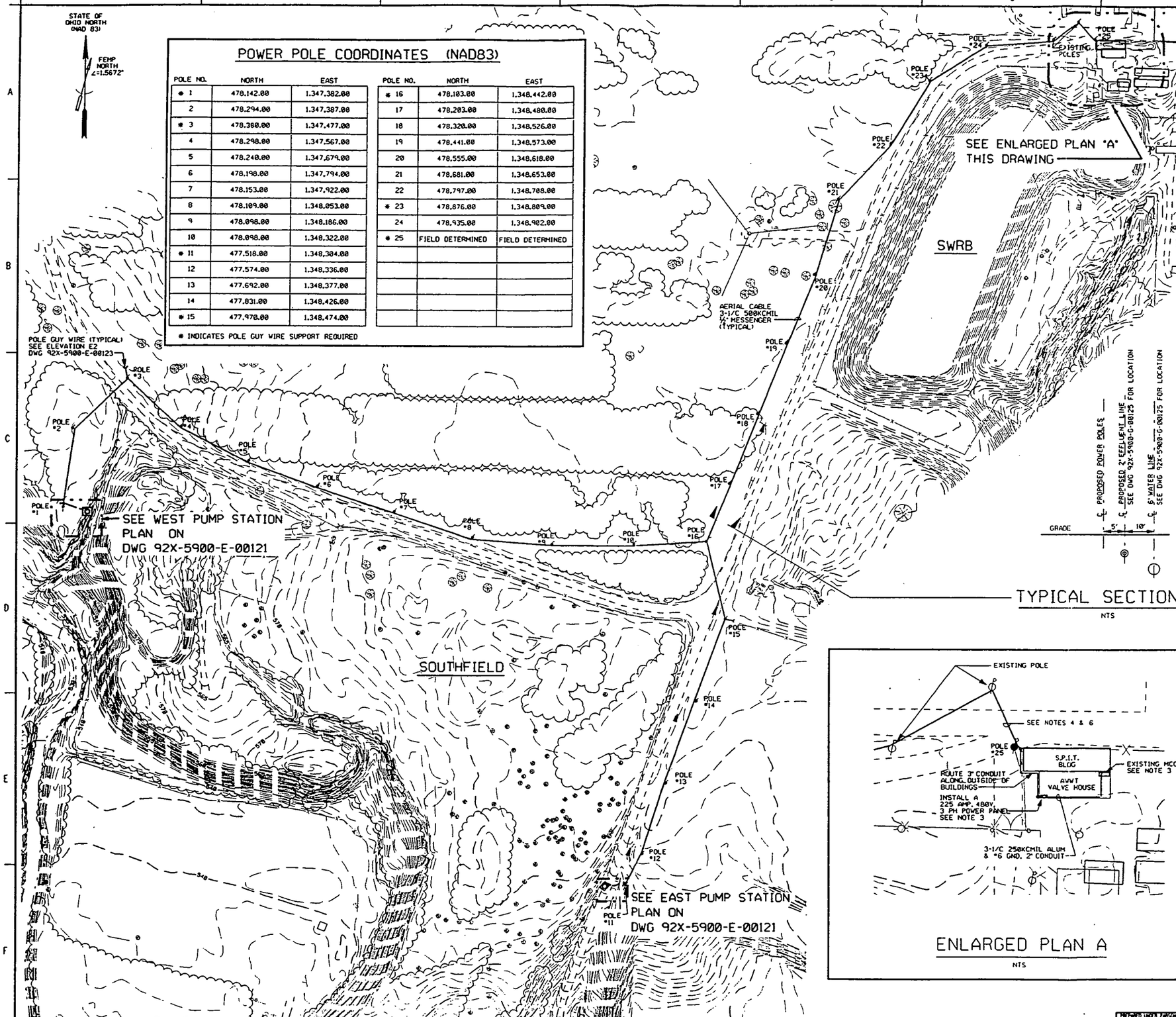

POWER POLE COORDINATES (NAD83)

POLE NO.	NORTH	EAST	POLE NO.	NORTH	EAST
* 1	478.142.00	1.347.382.00	* 16	478.103.00	1.348.442.00
2	478.294.00	1.347.387.00	17	478.203.00	1.348.480.00
* 3	478.380.00	1.347.477.00	18	478.320.00	1.348.526.00
4	478.298.00	1.347.567.00	19	478.441.00	1.348.573.00
5	478.240.00	1.347.679.00	20	478.555.00	1.348.618.00
6	478.198.00	1.347.794.00	21	478.681.00	1.348.653.00
7	478.153.00	1.347.922.00	22	478.797.00	1.348.708.00
8	478.109.00	1.348.053.00	* 23	478.876.00	1.348.809.00
9	478.098.00	1.348.186.00	24	478.935.00	1.348.902.00
10	478.098.00	1.348.322.00	* 25	FIELD DETERMINED	FIELD DETERMINED
* 11	477.518.00	1.348.304.00			
12	477.574.00	1.348.336.00			
13	477.692.00	1.348.377.00			
14	477.831.00	1.348.426.00			
* 15	477.970.00	1.348.474.00			

* INDICATES POLE GUY WIRE SUPPORT REQUIRED

TYPICAL SECTION

NTS

ENLARGED PLAN A

NTS

NOTES

1. SEE DRAWING 92X-5900-X-00140 FOR DRAWING INDEX.
2. SEE DRAWING 92X-5900-E-00124 FOR ELECTRICAL INSTALLATION NOTES AND EQUIPMENT DESCRIPTIONS / SPECIFICATIONS.
3. PROVIDE AND INSTALL A 225 AMP CIRCUIT BREAKER IN THE EXISTING SIEMENS MCC (PART NO. 9-001-80740-30) IN THE AWWT VALVE HOUSE.
   PROVIDE AND INSTALL A 225 AMP, 3 PHASE POWER PANEL NEAR SOUTHWEST CORNER OF THE VALVE HOUSE WITH A 150 AMP BRANCH CIRCUIT BREAKER TO FEED THE OVERHEAD POWER FEEDER.
4. INSTALL A 3-1/C 500KCMIL ALUMINUM AERIAL CABLE AS SHOWN USING 45 FOOT, CLASS 2 POLES SPACED AT 125' (MIN TO 150' MAX). INSTALL 12" AIR TERMINAL AND BUTT GROUND ON EACH POLE USING #4 SOLID COPPER BARE WIRE.
   SUBCONTRACTOR TO ADD GUY SUPPORTS TO POLES AS NECESSARY WITH THE APPROVAL OF FERMCO CONSTRUCTION MANAGER.
   SEE DRAWING 92X-5900-E-00123, ELEVATION E2 FOR TYPICAL POLE GUYING DETAILS.
5. SEE DRAWING 92X-5900-E-00122 FOR PUMP STATION SCHEMATIC, ELEVATIONS AND DETAILS.
6. 500 KCMIL CABLE SIZE IS REQUIRED FOR VOLTAGE DROP. ADDITIONAL FUTURE LOAD CAPACITY IS APPROXIMATELY 20 KVA, MAXIMUM.

7412

LEGEND

- EXISTING POLE
- NEW POLE

REF DWG NO.	DRAWING TITLE
92X-5900-X-00140	DRAWING INDEX
92X-5900-E-00121	PLANS EAST & WEST PUMP STATIONS AND AWWT TANK 155
92X-5900-E-00124	INSTALLATION NOTES AND EQUIPMENT DESCRIPTIONS / SPECIFICATIONS
92X-5900-E-00122	SCHEMATIC, ELEVATIONS AND DETAILS
92X-5900-G-00125	MASTER SITE PLAN

000080

REV. NO.	ISSUE OR REVISION PURPOSE - DESCRIPTION	A-E	FERMCO	DATE
0	CERTIFIED FOR CONSTRUCTION			

INITIALS AND DATE

UNITED STATES DEPARTMENT OF ENERGY
FERNALD ENVIRONMENTAL MANAGEMENT PROJECT

THIS DRAWING PREPARED BY
PARSONS
THE RALPH M. PARSONS CO. - PARSONS MAIN, INC. - ENGINEERING-SCIENCE, INC.
CINCINNATI, OHIO

PROJECT NAME
SEEPAGE COLLECTION & REMOVAL OF SEDIMENT
REMOVAL ACTION NO. 30

DRAWING TITLE
ELECTRICAL
PLAN
PROJECT SITE PLAN

DRAWN BY	DATE	LEAD ENGINEER	DATE	CHECKED BY	DATE
R. PROSKI	2/17/95			J.L. COOPER	3/17/95

PLANT/BLDG NO. | FLOOR | SCALE 1" = 60' | CLASS

SUBMITTED FOR APPROVAL | FERMCO CRU APPROVAL

A-E DATE | DATE

PROJECT UNDER PARSONS PROJECT ORDER NUMBER	DOE PROJECT NO.	TEMP PROJECT NO.	DRAWING INDEX CODE NO.	SHEET NO.	REV. NO.
CRU2/P013		WBS 1.1.1.1.2.2.6 00-90701	92X-5900-E-00120	E0001	0

R92e00121.m(249.ws323) po139@ws323. Tue Jul 25 08:41:26 CDT 1995

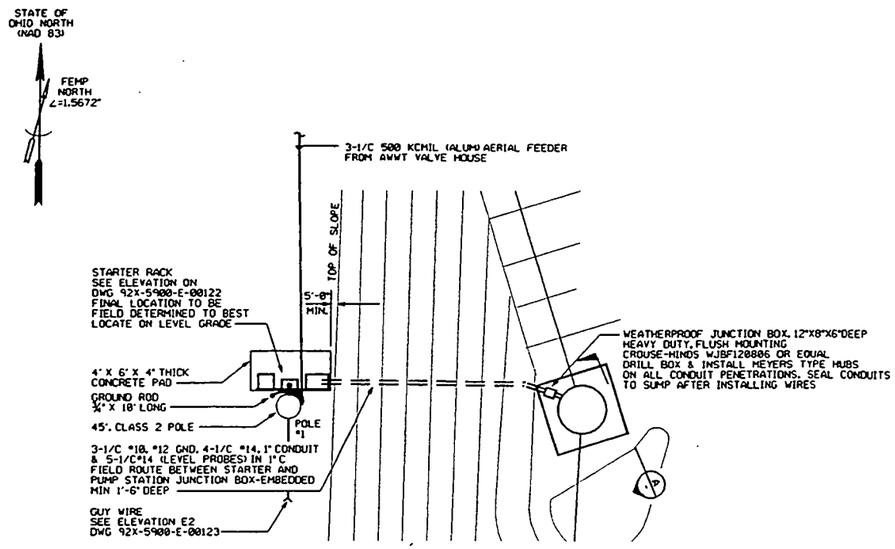

PLAN
WEST PUMP STATION
NTS

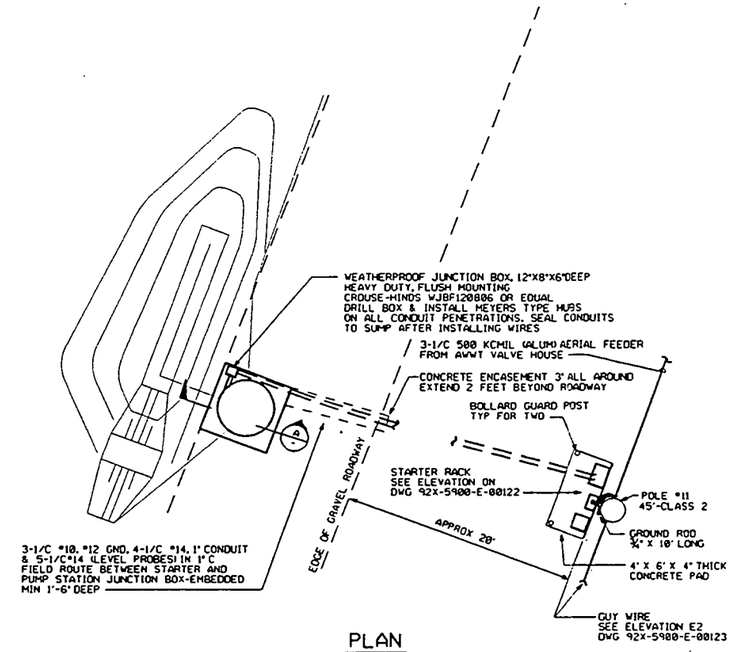

PLAN
EAST PUMP STATION
NTS

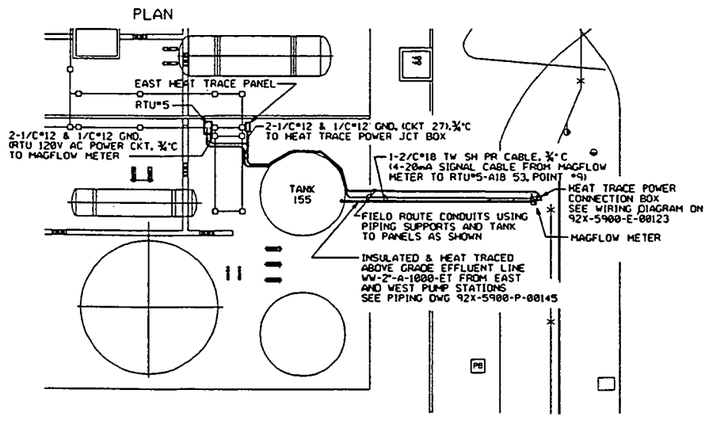

PLAN
ELECTRICAL/INSTRUMENTATION AT AWWT TANK 155
NTS

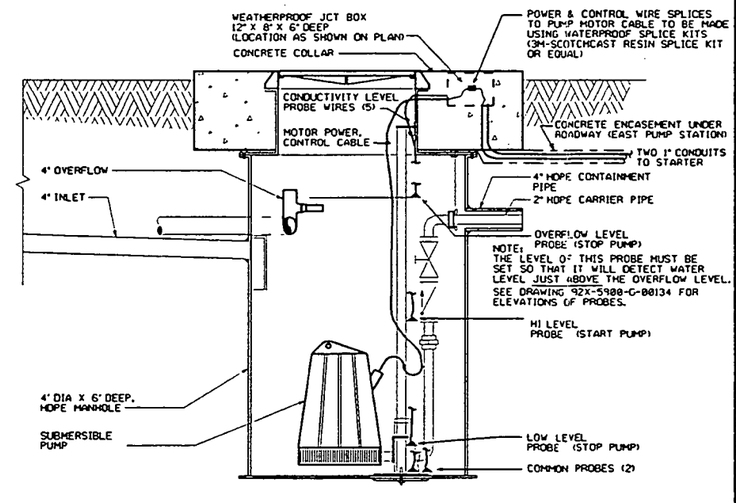

TYPICAL PUMP STATION SECTION (A)
1"=1'-0"

NOTES

1. SEE DRAWING 92X-5900-X-00140 FOR DRAWING INDEX.
2. SEE DRAWING 92X-5900-E-00124 FOR INSTALLATION NOTES AND EQUIPMENT DESCRIPTION SPECIFICATIONS.
3. CONDUITS ARE TO BE FIELD ROUTED.
4. ALL ELECTRICAL DEVICES ARE TO BE NEMA 3 (WEATHERPROOF).
5. ALL ELECTRICAL DEVICES TO BE BONDED TO GROUND ROD INSTALLED AT POWER POLE.

7412

REF DWG NO.	DRAWING TITLE
92X-5900-X-00140	DRAWING INDEX
92X-5900-E-00120	ELECTRICAL PROJECT SITE PLAN
92X-5900-E-00122	SCHEMATIC, ELEVATIONS AND DETAILS
92X-5900-E-00123	ELECTRICAL DETAILS
92X-5900-E-00124	INSTALLATION NOTES AND EQUIPMENT DESCRIPTIONS / SPECIFICATIONS
92X-5900-P-00145	PIPING SECTIONS AND DETAILS
92X-5900-G-00135	GRADING PLAN - EAST PUMP STATION
92X-5900-G-00136	GRADING PLAN - WEST PUMP STATION
92X-5900-G-00134	CICIL - SITE DETAILS - PUMP STATION

000081

REV. NO.	ISSUE OR REVISION PURPOSE - DESCRIPTION	A-E INITIALS AND DATE	FERNCO INITIALS AND DATE	DATE
0	CERTIFIED FOR CONSTRUCTION			

UNITED STATES
DEPARTMENT OF ENERGY
FERNALD ENVIRONMENTAL MANAGEMENT PROJECT

THIS DRAWING PREPARED BY
PARSONS
THE RALPH M. PARSONS CO. - PARSONS MAIN, INC. - ENGINEERING-SCIENCE, INC.
CINCINNATI, OHIO

PROJECT NAME
SEEPAGE COLLECTION & REMOVAL OF SEDIMENT
REMOVAL ACTION NO. 30

DRAWING TITLE
ELECTRICAL PLANS
EAST & WEST PUMP STATIONS AND AWWT TANK 155

DRAWN BY	DATE	LEAD ENGINEER	DATE	DESIGN BY	DATE
R. PROSKI	2/17/95			J.L. COOPER	3/17/95

PLANT/BLDG. NO.	FLOOR	SCALE	CLASS
		NONE	

SUBMITTED FOR APPROVAL: A-E DATE
FERNCO ORU APPROVAL: DATE

PROJECT ORDER NUMBER	DOE PROJECT NO.	FEMP PROJECT NO.	DRAWING REF. CODE NO.	SHEET NO.	REV. NO.
CRU2/P0139		WBS 1.1.1.1.2.2.6 00-90701	92X-5900-E-00121	E0002	0

R92e00123.m(251.ws323) po139@ws323. Tue Jul 25 08:57:53 CDT 1995

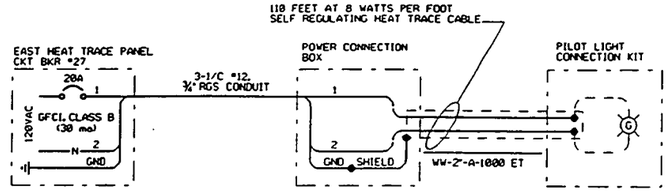

WIRING DIAGRAM FOR HEAT TRACING
ABOVE GRADE PIPE TO TANK 155

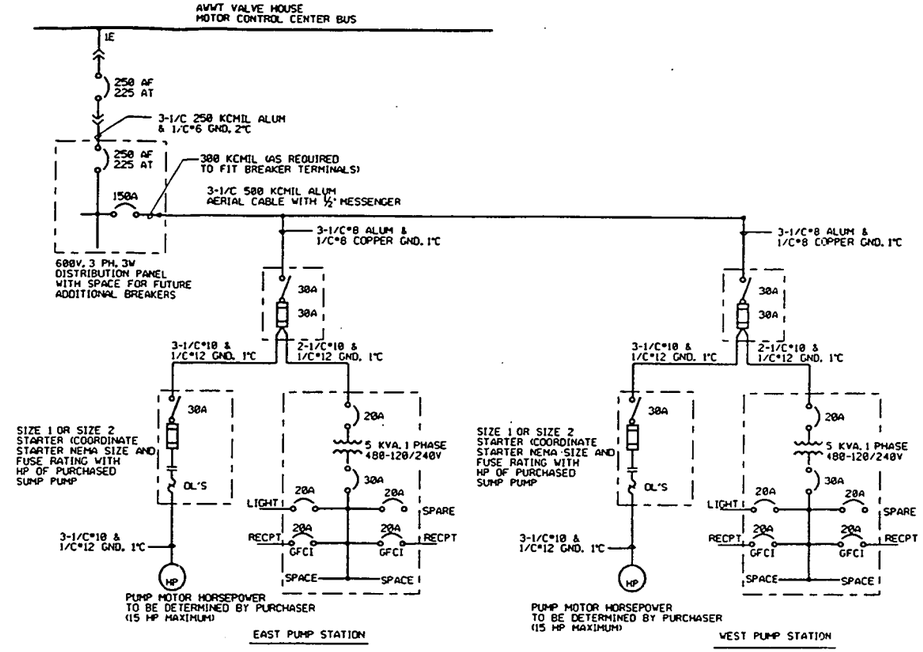

SINGLE LINE DIAGRAM

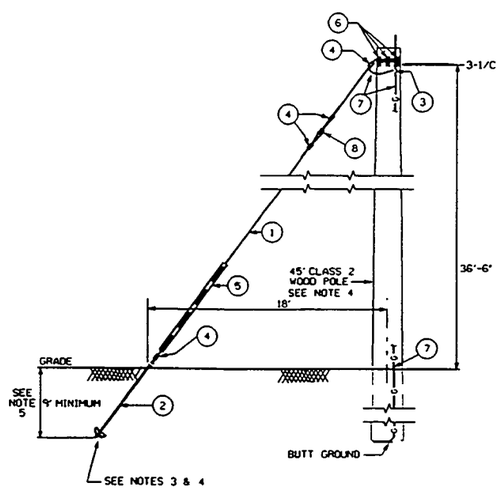

* EQUIPMENT LIST		
ITEM	QTY	DESCRIPTION
1	1	7/8" DIA -7X7 STANDARD CONSTRUCTION GALVANIZED STEEL STRUCTURAL ROPE WITH A MINIMUM BREAKING STRENGTH OF 35 TONS
2	1	12" DIA CLASS 2, HELICAL SCREW TYPE GUY ANCHOR WITH MINIMUM PULLOUT CAPACITY OF 18000 POUNDS
3	1	COMPRESSION GROUND FITTING
4	4	GUY WIRE CLAMP
5	1	GUY WIRE MARKER
6	4	GUY HOOK, GUY PLATES
7	1	#4 BARE SOLID COPPER GROUND WIRE
8	1	STRAIN INSULATOR

* QUANTITIES GIVEN ON A PER GUY ANCHOR BASIS

TYPICAL ELEVATION (E2 / E00123)
NTS

REF
E00120
E00121
E00122

SEE SITE PLAN ON E00120 FOR POLE LINE ROUTING. SUBCONTRACTOR TO INSTALL GUY SUPPORTS WHERE NECESSARY ON NEW AND EXISTING POLES.

NOTES

1. SEE 92X-5900-X-00140 FOR DRAWING INDEX.
2. SEE 92X-5900-E-00121 FOR PLAN AT AWWT TANK 155.
3. POWER INSTALLED SOIL ANCHORS TO BE INSTALLED PER MANUFACTURERS INSTRUCTIONS. DEPTH ASSUMED PER SOIL DATA FOR MINIMUM BLOW COUNT 14.
4. PRIOR TO INSTALLATION OF EARTH ANCHORS OR POLES, CONTRACTOR IS TO VERIFY LOCATION OF NEARBY UNDERGROUND UTILITIES AND PUSH SMALL DIAMETER STEEL SOIL PROBE THROUGH AREA TO VERIFY THAT NO UNDERGOUND OBSTRUCTIONS ARE PRESENT.
5. INSTALL SOIL ANCHORS ACCORDING TO MANUFACTURERS INSTRUCTIONS. DEPTH CALCULATION BASED ON SOIL DATA FOR MINIMUM BLOW COUNT OF 7. IF BLOW COUNT IS LESS THAN 7, CONTACT FERMCO CONSTRUCTION MANAGER.

7412

REF DWG NO.	DRAWING TITLE
92X-5900-X-00140	DRAWING INDEX
92X-5900-E-00121	PLANS EAST & WEST PUMP STATIONS AND AWWT TANK 155

000082

REV. NO.	ISSUE OR REVISION PURPOSE - DESCRIPTION	A-E	FERMCO	SNT
0	CERTIFIED FOR CONSTRUCTION			

UNITED STATES
DEPARTMENT OF ENERGY
FERNALD ENVIRONMENTAL MANAGEMENT PROJECT

THIS DRAWING PREPARED BY
PARSONS
THE RALPH M. PARSONS CO. - PARSONS MAIN, INC. - ENGINEERING-SCIENCE, INC.
CINCINNATI, OHIO

PROJECT NAME
SEEPAGE COLLECTION & REMOVAL OF SEDIMENT
REMOVAL ACTION NO. 38

DRAWING TITLE
ELECTRICAL
ELECTRICAL DETAILS

DRAWN BY	DATE	LEAD DRAFTER	DATE	CHECKED BY	DATE
R. PROSKI	2/17/95			J.L. COOPER	3/17/95

PLANT/BLDG. NO. | FLOOR | SCALE: NONE | CLASS

SUBMITTED FOR APPROVAL | FERMCO CRU APPROVAL

A-E DATE | DATE

PROJECT ORDER NUMBER	DOE PROJECT NO.	FEMP PROJECT NO.	DRAWING INDEX CODE NO.	SHEET NO.	REV. NO.
CRU2/P0139		WBS 1.1.1.1.2.2.6 00-90701	92X-5900-E-00123	E0004	0

R92e00122.m(250.ws323) po139@ws323. Tue Jul 25 08:54:39 CDT 1995

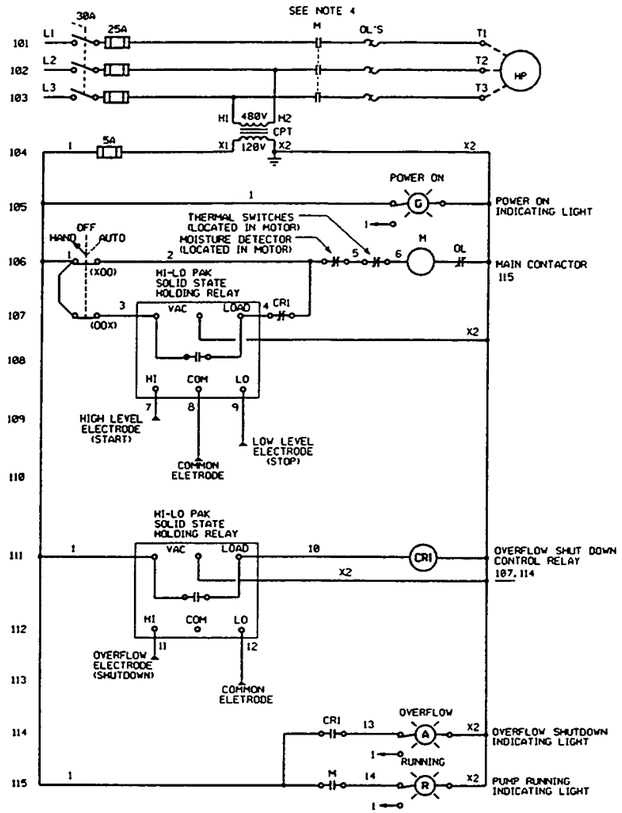

PUMP STATION SCHEMATIC

TYPICAL FOR EAST AND WEST PUMP STATIONS

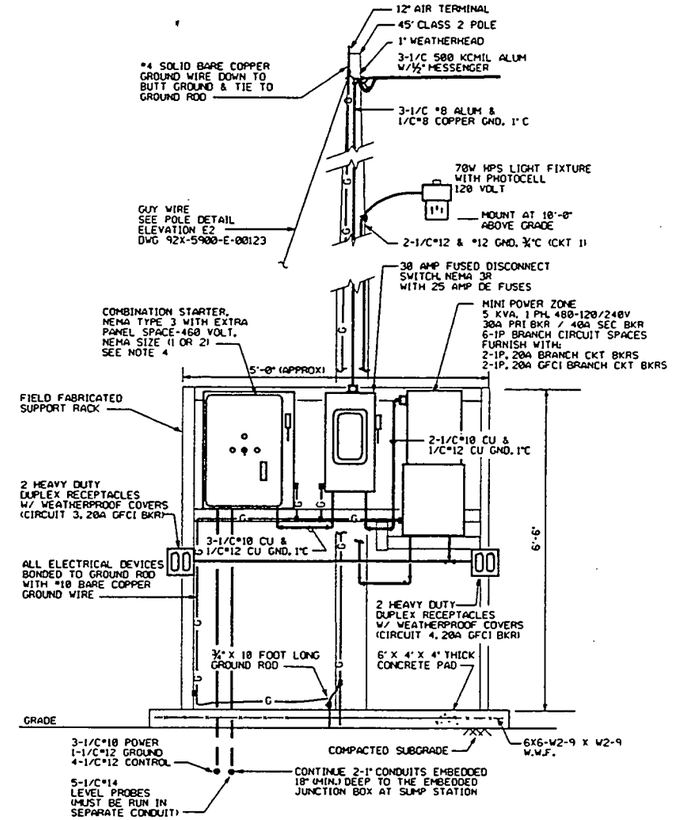

ELEVATION

NTS — E1 E00122 — REF E00120

EAST PUMP STATION STARTER RACK
WEST PUMP STATION STARTER RACK

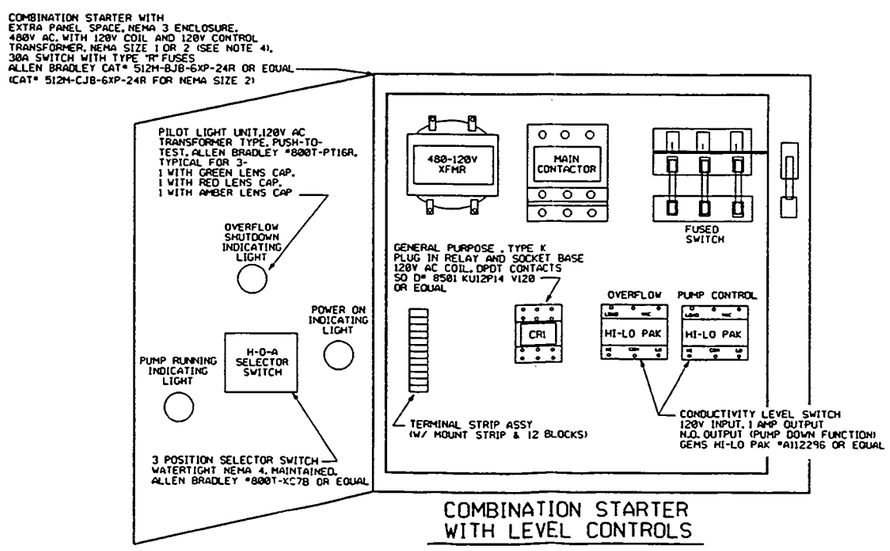

COMBINATION STARTER WITH LEVEL CONTROLS

TYPICAL FOR EAST AND WEST PUMP STATION

NTS

NOTES

1. SEE 92X-5900-X-00140 FOR DRAWING INDEX.
2. SEE 92X-5900-E-00120 FOR ELECTRICAL SITE PLAN.
3. SEE 92X-5900-E-00124 FOR ELECTRICAL INSTALLATION NOTES AND EQUIPMENT DESCRIPTIONS / SPECIFICATIONS.
4. FURNISH NEMA SIZE STARTER (1 OR 2) AS REQUIRED IN ACCORDANCE WITH HORSEPOWER RATING OF PUMP MOTOR PURCHASED. PROVIDE, INSTALL AND WIRE CONTROL DEVICES IN EXTRA PANEL SPACE PROVIDED IN STARTER. WIRE PER SCHEMATIC SHOWN ON THIS DRAWING.

7412

REF DWG NO.	DRAWING TITLE
92X-5900-X-00140	DRAWING INDEX
92X-5900-E-00120	ELECTRICAL SITE PLAN
92X-5900-E-00123	ELECTRICAL DETAILS
92X-5900-E-00124	ELECTRICAL INSTALLATION NOTES AND EQUIPMENT DESCRIPTIONS / SPECIFICATIONS

000083

REV. NO.	ISSUE OR REVISION PURPOSE - DESCRIPTION	A-E	FERNCO	DATE
0	CERTIFIED FOR CONSTRUCTION			

INITIALS AND DATE

UNITED STATES
DEPARTMENT OF ENERGY
FERNALD ENVIRONMENTAL MANAGEMENT PROJECT

THIS DRAWING PREPARED BY
PARSONS
THE RALPH M. PARSONS CO. - PARSONS MAIN, INC. - ENGINEERING-SCIENCE, INC.
CINCINNATI, OHIO

PROJECT NAME
SEEPAGE COLLECTION & REMOVAL OF SEDIMENT
REMOVAL ACTION NO. 30

DRAWING TITLE
ELECTRICAL
SCHEMATIC, ELEVATIONS AND DETAILS
EAST AND WEST PUMP STATIONS

DRAWN BY	DATE	LEAD ENGINEER	DATE	CHECKED BY	DATE
R. PROSKI	2/17/95			J.L. COOPER	3/17/95

PLANT/BLDG. NO.	FLOOR	SCALE	CLASS
		NONE	

SUBMITTED FOR APPROVAL — FERNCO CRU APPROVAL — A-E DATE — DATE

PREPARED UNDER PARSONS PROJECT ORDER NUMBER	DOE PROJECT NO.	FEMP PROJECT NO.	DRAWING INDEX CODE NO.	SHEET NO.	REV. NO.
CRU2/P0139		WBS 1.1.1.1.2.2.6 00-90701	92X-5900-E-00122	E0003	0

R92e00124.m(252.ws323) po139@ws323. Tue Jul 25 09:17:11 CDT 1995

INSTALLATION NOTES

1. ELECTRICAL EQUIPMENT AND INSTALLATION ON THIS PROJECT SHALL BE IN ACCORDANCE WITH GUIDELINES STATED IN DOE 6430.1 SECTION 16.
2. CONDUIT ROUTINGS ARE SHOWN DIAGRAMATICALLY. LOCATE PUMP STATION CONTROL RACK AS BEST SUITED TO PUMP STATION AND FIELD CONDITIONS
3. ALL ELECTRICAL DEVICES TO BE RATED NEMA 3 (WEATHERPROOF) AND GROUNDED IN ACCORDANCE WITH THE NATIONAL ELECTRIC CODE. NFPA 70-1993.
4. DISTRIBUTION PANEL AND DISCONNECT SWITCH TERMINALS TO BE RATED FOR COPPER/ALUMINUM WIRE. ALUMINUM WIRE TO BE TERMINATED IN ACCORDANCE WITH MANUFACTURERS INSTRUCTIONS.
5. ALL WIRING SHALL BE TESTED FOR CONTINUITY. ALL 480 VOLT POWER WIRE INSULATION SHALL BE MEGGER TESTED BETWEEN EACH CONDUCTOR AND GROUND. A 1000-VOLT MEGGER SHALL BE USED FOR INSULATION RATED 600 VOLTS. MINIMUM RESISTANCE SHALL BE 100 MEGOHMS.
   TEST RESULTS SHALL BE RECORDED AND SUBMITTED TO THE FERMCO CONSTRUCTION MANAGER.
6. MOTOR WINDINGS SHALL BE CHECKED FOR CONTINUITY AND MEGGER TESTED PRIOR TO CONNECTION OF POWER LEADS. MOTOR AND PHASE ROTATION SHALL BE CHECKED WITH A PHASE ROTATION TESTER MANUFACTURED BY G. BIDDLE CO. OR EQUAL ON EQUIPMENT WHICH COULD BE DAMAGED BY REVERSE ROTATION.

EQUIPMENT DESCRIPTIONS / SPECIFICATIONS

GENERAL

THE LISTING OF EQUIPMENT SUPPLIERS IN NO WAY PRECLUDES THE OFFERER FROM PROPOSING ALTERNATE SUPPLIERS OF ANY OF THE EQUIPMENT TO BE FURNISHED WITHIN THE SCOPE OF THESE SPECIFICATIONS. THE SUPPLIERS LISTED IS INTENDED TO IDENTIFY THE TYPE OF EQUIPMENT USED IN THE DESIGN AND GENERAL QUALITY OF THAT EQUIPMENT. IT IS THE OFFERER'S RESPONSIBILITY TO PROPOSE EQUIPMENT THAT IS BEST SUITED FOR THIS PROJECT IN COMBINED TERMS OF QUALITY AND PRICE.

225 AMP POWER DISTRIBUTION PANEL

600 VOLT, 3 PHASE 3 WIRE SOLID NEUTRAL DISTRIBUTION PANEL SURFACE MOUNTING, TYPE 1 ENCLOSURE, 14K AIC, WITH DOOR, SQUARE D, I- LINE, CLASS 2110, TYPE HCM WITH 225 AMP MAIN BREAKER, PROVIDE 1-150 AMP, 3 POLE BRANCH CIRCUIT BREAKER.

DISCONNECT SWITCHES

FUSIBLE SWITCH ASSEMBLY IN NEMA 3R ENCLOSURE, HEAVY DUTY, 600 VOLT, 3 POLE, SOLID NEUTRAL, QUICK-MAKE QUICK-BREAK, VISIBLE BLADE, LOAD INTERRUPTER KNIFE SWITCH, DESIGNED TO ACCOMMODATE CLASS R FUSES SQUARE D, CLASS 3110, SIZE AS INDICATED ON DRAWINGS.

STARTERS

NEMA RATED COMBINATION STARTERS WITH EXTRA PANEL SPACE, NEMA TYPE 3 ENCLOSURE, NEMA SIZE 1 OR 2 (COORDINATED WITH HORSEPOWER OF PUMP MOTOR PURCHASED), 480V, 3 PHASE WITH 120 VOLT AC COIL AND 480-120VOLT CONTROL TRANSFORMER, FUSIBLE DISCONNECT TYPE WITH CLASS R FUSE CLIPS, ALLEN BRADLEY BULLETIN 512M

LEVEL CONTROLS

CONDUCTIVITY LEVEL CONTROLS ARE TO BE INSTALLED AND WIRED IN EXTRA SPACE STARTERS AS SHOWN ON DESIGN DRAWINGS. CONDUCTIVITY PROBES ARE TO BE WIRE SUSPENSION ELECTRODE TYPE, BRASS WITH SHIELD, AND TYPE SW SUSPENSION WIRE. B/W CONTROLS TYPE E-1S-SHIELDED..*6013-WS.

COMBINATION TRANSFORMER / DISTRIBUTION PANEL

INDOOR/OUTDOOR PACKAGED POWER SUPPLY, WEATHER RESISTANT ENCLOSURE SINGLE PHASE, 5 KVA, 480-240/120V WITH FULL CAPACITY TAPS 2-5% FCBN, 20A PRIMARY MAIN CIRCUIT BREAKER & 30A SECONDARY MAIN CIRCUIT BREAKER, SPACE FOR 6-1P OR 3 -2P BRANCH CIRCUIT BREAKERS, SQUARE D CAT*MP25540F SUPPLY WITH 2-1P 20AMP AND 2-1P 20AMP GFCI (6mA) BRANCH CIRCUIT BREAKERS

LIGHTING FIXTURES

DUSK-TO-DAWN PACKAGED OUTDOOR LIGHTING FIXTURE, DIE-CAST ALUMINUM WITH 24" ALUMINUM MAST ARM, 120 VOLT AC, 70 WATT HIGH PRESSURE SODIUM LAMP AND BALLAST WITH PHOTOELECTRIC CONTROL.
PACKAGED COMPLETE WITH FIXTURE, LAMP, ARM, HOOK-UP WIRE, PHOTOCONTROL AND MOUNTING HARDWARE.

AMERICAN LIGHTING / GRAYBAR CAT*11-570E5-6/PKG B

POWER CIRCUIT BREAKER

225 AMP, 3 POLE, 480 VOLT PLUG IN COMPARTMENT CIRCUIT BREAKER FOR INSTALLATION IN EXISTING SIEMENS MOTOR CONTROL CENTER (PART NO.9-001-80740-30) LOCATED IN THE AWWT VALVE HOUSE.

BASIC ELECTRICAL MATERIALS

WOOD POLES

WOOD POWER POLES SHALL TO BE 45 FOOT LONG, CLASS 2

CONDUIT

CONDUIT SHALL BE RIGID STEEL, HEAVY WALL, GALVANIZED, SIZE AS SHOWN ON DRAWINGS

RECEPTACLES

RECEPTACLES SHALL BE HEAVY DUTY, 125VOLT, 20 AMP 2 POLE, 3 WIRE GROUNDING DUPLEX RECEPTACLES, INSTALL IN CAST CONDUIT BOX WITH WEATHERPROOF LIFT COVERS.

WIRE AND CABLE

SINGLE CONDUCTOR, 600 VOLT INSULATED COPPER OR ALUMINUM CONDUCTOR FOR POWER AND LIGHTING SHALL NOT BE SMALLER THAN *12 AWG. CONDUCTORS FOR CONTROL SHALL BE STRANDED COPPER, NOT SMALLER THAN *14 AWG.
CONDUCTORS SHALL BE COLOR CODED. *6 AWG AND LARGER SHALL BE IDENTIFIED USING COLORED TAPE AT TERMINALS AND SPLICE POINTS. COLOR CODING AS FOLLOWS:

	480Y/277V	120/240V
PHASE A	YELLOW	BLACK
PHASE B	ORANGE	RED
PHASE C	BROWN	
NEUTRAL (GROUNDED)	GRAY	WHITE
GROUND	GREEN	GREEN

HEAT TRACE CABLE

HEATING CABLE SHALL BE SELF-LIMITING, PARALLEL RESISTANCE ELECTRIC TRACING CABLE, 120 VOLT WITH MAXIMUM OUTPUT TEMPERATURE 150 DEGREES F.
POWER TERMINATION KITS, TEE KITS, PILOT LIGHTS AND END SEALS SHALL BE UTILIZED WHERE APPROPRIATE.
MANUFACTURERS...RAYCHEM, CHROMOLOX OR THERMON.
INSTALL PER MANUFACTURERS INSTRUCTIONS

GROUNDING MATERIALS

GROUND ROD ELECTRODE SHALL BE COPPER-CLAD STEEL, ¾INCH DIAMETER, 10 FOOT LENGTH
POLE GROUND WIRE SHALL BE SOLID BARE COPPER WIRE, SIZE AS INDICATED ON DRAWINGS. GROUND CONDUCTORS RUN WITH POWER CABLES SHALL BE GREEN INSULATED CABLES.
SUITABLE GROUND CONNECTORS AS SUPPLIED BY BURNDY, IDEAL, ILSCO OR OTHERS SHALL BE USED FOR MAKING GROUNDING CONNECTIONS.

NOTES

1. SEE 92X-5900-X-00140 FOR DRAWING INDEX.
2. SEE 92X-5900-E-00120 FOR ELECTRICAL SITE PLAN.
3. THE PURPOSE OF THIS DRAWING IS TO CONVEY ELECTRICAL INSTALLATION REQUIREMENTS AND IDENTIFY ELECTRICAL EQUIPMENT IN LIEU OF FORMAL PROJECT SPECIFICATIONS.

E 7412

REF DWG NO.	DRAWING TITLE
92X-5900-X-00140	DRAWING INDEX
92X-5900-E-00120	ELECTRICAL SITE PLAN

000084

REV. NO.	ISSUE OR REVISION PURPOSE - DESCRIPTION	A-E	FERMCO	DATE
0	CERTIFIED FOR CONSTRUCTION			

UNITED STATES
DEPARTMENT OF ENERGY
FERNALD ENVIRONMENTAL MANAGEMENT PROJECT

THIS DRAWING PREPARED BY
PARSONS
THE RALPH M. PARSONS CO. - PARSONS MAIN, INC. - ENGINEERING-SCIENCE, INC.
CINCINNATI, OHIO

PROJECT NAME
SEEPAGE COLLECTION & REMOVAL OF SEDIMENT
REMOVAL ACTION NO. 30

DRAWING TITLE
ELECTRICAL
INSTALLATION NOTES AND
EQUIPMENT DESCRIPTIONS / SPECIFICATIONS

DRAWN BY	DATE	LEAD ENGINEER	DATE	CHECKED BY	DATE
R. PROSKI	2/17/95			J. L. COOPER	3/28/95

PLANT/BLDG NO.	FLOOR	SCALE	CLASS
		NONE	

SUBMITTED FOR APPROVAL: A-E DATE
FERMCO CRU APPROVAL: DATE

PREPARED UNDER PARSONS PROJECT ORDER NUMBER	DOE PROJECT NO.	FEMP PROJECT NO.	DRAWING SHEET CODE NO.	SHEET NO.	REV. NO.
CRU2/P0139		VBS 1.1.1.1.2.2.6 00-90701	92X-5900-E-00124	E0005	0

R92n00142.m(6570.ws313) po139@ws313. Tue Jul 25 08:29:33 CDT 1995

PIPING SYMBOLS

- GATE VALVE
- GLOBE VALVE
- BALL VALVE
- PLUG VALVE
- BUTTERFLY VALVE/DAMPER
- STOP CHECK
- NEEDLE VALVE
- CHECK VALVE
- SLIDING GATE VALVE
- BALL CHECK VALVE
- BACKFLOW PREVENTER
- DIAPHRAGM VALVE
- PINCH VALVE
- 3 WAY VALVE
- 3 WAY BALL VALVE
- 3 WAY PLUG VALVE
- ANGLE GATE VALVE
- ANGLE GLOBE VALVE
- FOOT VALVE
- HUB DRAIN OR FUNNEL
- DIAPHRAGM OPERATOR
- DIAPHRAGM W/ POSITIONER
- PISTON OPERATOR
- SAFETY RELIEF VALVE
- SOLENOID OPERATOR
- SELF-CONTAINED BACK PRESSURE REGULATING VALVE
- 2-WAY SOLENOID VALVE
- 3-WAY SOLENOID VALVE (INDICATES DEENERGIZED SECONDARY)
- 4-WAY SOLENOID VALVE
- VALVE WITH OPERATOR (VALVE TYPE UNDEFINED)
- STEAM TRAP
- HOSE QUICK COUPLING
- UNION
- DRAIN LEG
- EXPANSION JOINT
- HANDWHEEL
- EJECTOR
- STRAINER (Y TYPE)
- STRAINER (SINGLE BASKET)
- STRAINER (DOUBLE BASKET)
- STRAINER (CONE TYPE)
- STRAINER (SUCTION TYPE)
- CONCENTRIC REDUCER
- ECCENTRIC REDUCER
- ORIFICE
- VENTURI TUBE
- SIPHON TUBE
- THERMOWELL
- FLOW DIRECTION
- WELDED CONNECTION
- FLANGED CONNECTION
- FLEXIBLE HOSE
- PIPE CAP
- TIE/IN MARK
- PRIMARY
- SECONDARY
- EXISTING PIPING OR EQUIPMENT
- PACKAGED SYSTEM
- MATERIAL CODE BREAK
- INSULATION CODE BREAK
- PULSATION DAMPENER
- AIR FILTER
- FILTER LUBRICATOR REGULATOR
- AIR OPERATED DIAPHRAGM PUMP
- HORIZONTAL CENTRIFUGAL PUMP
- VERTICAL CENTRIFUGAL PUMP
- SUMP PUMP
- CHEMICAL METERING PUMP
- AGITATOR (MIXER)

ABBREVIATIONS

BTU	BRITISH THERMAL UNIT
CU FT	CUBIC FEET
GPH	GALLONS PER HOUR
GPM	GALLONS PER MINUTE
KW	KILOWATT
LB/HR	POUNDS PER HOUR
SCFM	STD. CUBIC FT/MINUTE
NO	NORMALLY OPEN
NC	NORMALLY CLOSED
FO	FAIL OPEN
FC	FAIL CLOSED
AO	AIR TO OPEN
AC	AIR TO CLOSE
IA	INSTRUMENT AIR
ET	ELECTRIC TRACED AND INSULATED
ST	STEAM TRACED AND INSULATED
EF	EXHAUST FAN
GV	GRAVITY VENTILATOR
UH	UNIT HEATER
RED	REDUCER
ECC	ECCENTRIC
TBD	TO BE DETERMINED
TF	TOP FLAT
TYP	TYPICAL
MATL	MATERIAL
MED	MEDIUM
CO	CARBON MONOXIDE
RH	RELATIVE HUMIDITY
CFM	CUBIC FEET/MINUTE
SF	SOUTH FIELD
IFA	INACTIVE FLYASH PILE
CONH	CLEAN OUT MANHOLE
HDPE	HIGH DENSITY POLYETHYLENE
CS	CARBON STEEL

INSTRUMENTATION SPECIAL DESIGNATIONS

DESIGNATION	FUNCTION/ABBREVATION
Σ/N OR AVG	AVERAGING
± OR BI	BIAS
1:1.1:3.2:1 (TYP)	BOOST.GAIN OR ATTENUATE (INPUT:OUTPUT)
Δ OR DIF	DIFFERENTIAL
÷ OR DIV	DIVIDE
√‾ OR SQ.RT.	EXTRACT SQUARE ROOT
X OR MUL	MULTIPLY
N	RAISE TO POWER
REV	REVERSING
Σ OR SUM	SUMMING
L	LOW
LL	LOW LOW
H	HIGH
HH	HIGH HIGH
HL	HIGH LOW
∫	INTEGRATE (TIME INTEGRAL)
%	PROPORTIONAL
Y	UNDETERMINED COMPUTING RELAY
HOA	HAND-OFF-AUTO
⊼	EXISTING INSTRUMENT TO BE RELOCATED
I/P	CURRENT TO PNEUMATIC TRANSDUCER
RUN	RUNNING
OA	OFF-AUTO
OCA	OPEN-CLOSE-AUTO
I/O	INPUT / OUTPUT
*	EXISTING INSTRUMENT
UD	UP/DOWN
EW	EAST/WEST
I/I	CURRENT TO CURRENT

PIPING SPECIFICATIONS

FLOWING MEDIUM	MED CODE	MATL CODE
BACK WASH	BW	T
CHILLED WATER	CHS, CHR	A
CHLORINE	CL	B1
CONDENSATE	LC	W, T
CONDENSER WATER	CWS, CWR	A
COOLING WATER	WS, WR	A
DRAIN	DR	A, T
THICKENER OVERFLOW	TO	T
FILTRATE EFFLUENT	FT	A
FLOCCULANT	FL	A
FLUSH WATER	FW	T
FORCE MAIN	FM	M
INSTRUMENT AIR	IA	T
OFF-GAS	OG	T
NITRIC ACID	AN	T1
PERCHED GND WATER	PGW	B
PHOSPHORIC ACID	PAPH	T1
PLANT AIR	PA	W
POLISHED WATER	PW	A
POTABLE WATER	DW	W, B, B3
PROCESS WATER	TW	A
PROCESS WASTEWATER	CE	A
RAW WATER	RW	A
RECYCLE WATER	RC	T, B2
SCRUBBER RECYCLE	RSL	T
SLURRY	SL	T
SODIUM CARBONATE	SC	A
SODIUM HYDROXIDE	NA	T
SODIUM SILICATE	SS	A
STORM WATER	ST	A
SULFURIC ACID	SB	T1
SUMP DISCHARGE	SU	T
VACUUM	V	A
VENTILATION AIR	VE	T
WASTE WATER	WW	W, B4, A **

EXAMPLE:

CE-2"-A-100-ET

- MEDIUM CODE
- NOMINAL PIPE SIZE
- MATERIAL CODE
- LINE NUMBER
- HEAT TRACING AND INSULATION

A - A53,GR. A, SEAMLESS STEEL PIPE
B - PVC
B1 - PVDF
B2 - PVDF, 100 PSI
B3 - CPVC
B4 - HDPE
L - FIBERGLASS REINFORCED PLASTIC
M - DUCTILE IRON
T - 304L, STAINLESS STEEL PIPE
T1 - 316L, STAINLESS STEEL PIPE
W - A53,GR. A, GALVANIZED STEEL PIPE

** SEE NOTE 2

SINGLE LINE AIR DUCT SYMBOLS

- FAN WITH INLET VANES AND BACKDRAFT DAMPER
- BACKDRAFT DAMPER
- MOTORIZED DAMPER
- MANUAL VOLUME DAMPER

INSTRUMENT SYMBOLS

- ELECTRICAL BINARY SIGNAL
- PNEUMATIC BINARY SIGNAL
- ELECTROMAGNETIC OR SONIC SIGNAL (GUIDED)
- ELECTROMAGNETIC OR SONIC SIGNAL (NON-GUIDED)
- IA — INSTRUMENT/PLANT AIR SUPPLY
- ELECTRICAL SIGNAL
- CAPILLARY
- HYDRAULIC SIGNAL LINE
- PNEUMATIC OR VACUUM SIGNAL LINE
- INTERLOCK
- DIAPHRAGM SEAL
- FI — ROTAMETER
- FI — SIGHT GLASS
- LOCAL MOUNTED INSTRUMENT
- FRONT OF PANEL MOUNTED INSTRUMENT
- FRONT OF PANEL MOUNTED INSTRUMENT AUXILLIARY LOCATION
- REAR OF PANEL MOUNTED INSTRUMENT
- REAR OF PANEL MOUNTED INSTRUMENT AUXILLIARY LOCATION
- DIGITAL LOGIC OPERATOR INTERFACE AUXILIARY LOCATION
- DIGITAL LOGIC OPERATOR INTERFACE
- SHARED CONTROL AUXILIARY LOCATION
- SHARED DISPLAY COMPUTER CONTROL AND OPERATOR INTERFACE
- F — AIR VENT FILTER
- M — MAGNETIC FLOW METER
- POSITIVE DISPLACEMENT FLOW METER
- A*** — EQUIPMENT NUMBER

FYA 102 A
- LETTERS OF IDENTIFICATION
- SPECIAL DESIGNATION
- INSTRUMENT TAG NUMBER

TYPICAL CALL OUT

LETTERS OF INSTRUMENT IDENTIFICATION

LETTER	FIRST LETTER: MEASURED OR INITIATING VARIABLE	2ND LETTER: MODIFIER	3RD OR 4TH LETTER: READ OUT OR PASSIVE FUNCTION
A	ANALYSIS	ALARM	ALARM
B	BURNER FLAME	----	----
C	CAMERA	CONTROLLER	CONTROLLER
D	DENSITY	DIFFERENTIAL	----
E	VOLTAGE	ELEMENT	ELEMENT
F	FLOW RATE	RATIO (FRACTION)	----
G	GAGING (DIM)	VIEWING DEVICE	GLASS
H	HAND (MANUAL)	----	HIGH
I	CURRENT (ELECT)	INDICATE	INDICATE
J	POWER	SCAN	----
K	TIME	----	----
L	LEVEL	LIGHT	LOW
M	MOIST OR HUMIDITY	----	----
N	----	----	----
O	OBSERVATION	----	ORIFICE
P	PRESSURE OR VACUUM	----	POINT (TEST)
Q	QUANTITY OR EVENT	TOTALIZER	----
R	RADIOACTIVITY	RECORDER	----
S	SPEED OR FREQUENCY	SAFETY/SWITCH	SWITCH
T	TEMPERATURE	TRANSMITTER	TRANSMITTER
U	USER'S GUIDE	----	MULTIFUNCTION
V	VISCOSITY	----	VENT. VALVE
W	WEIGHT OR FORCE	WELL	----
X	UNCLASSIFIED	----	UNCLASSIFIED
Y	RELAY	RELAY	----
Z	POSITION	----	----

NOTES

1. FOR DRAWING INDEX SEE DRAWING 93X-5900-X-00140.
2. CONTAINMENT PIPE SHALL BE PROVIDED FOR EFFLUENT PIPE EXCEPT PIPE WITHIN THE HDPE MANHOLE. CONTAINMENT PIPE SIZE AND MATERIAL SHALL BE AS FOLLOWS:

	CARRIER PIPE	CONTAINMENT PIPE
A. UNDERGROUND	2" HDPE	4" HDPE
B. ABOVEGROUND	2" CS	4" CS

7412

REF DWG NO.	DRAWING TITLE
92X-5900-X-00140	DRAWING INDEX

000085

REV. NO.	ISSUE OR REVISION PURPOSE - DESCRIPTION	A-E	REVIEW	DATE
0	CERTIFIED FOR CONSTRUCTION			

INITIALS AND DATE

UNITED STATES
DEPARTMENT OF ENERGY
FERNALD ENVIRONMENTAL MANAGEMENT PROJECT

THIS DRAWING PREPARED BY
PARSONS
THE RALPH M. PARSONS CO. - PARSONS MAIN, INC. - ENGINEERING-SCIENCE, INC
CINCINNATI, OHIO

PROJECT NAME
SEEPAGE COLLECTION & REMOVAL OF SEDIMENT
REMOVAL ACTION NO. 30

DRAWING TITLE
MECHANICAL PROCESS
PIPING AND INSTRUMENTATION DIAGRAM
SYMBOLS AND LEGEND SHEET

DRAWN BY	DATE	LEAD ENGINEER	DATE	CHECKED BY	DATE
J. LAWSON	07/08/95			S. GHANTOUS	3/28/95

PLANT/BLDG. NO. | FLOOR | SCALE: NONE | CLASS

SUBMITTED FOR APPROVAL | FLANGED CRD APPROVAL

A-E DATE | DATE

PREPARED UNDER PARSONS PROJECT ORDER NUMBER	DOE PROJECT NO.	TEMP PROJECT NO.	DRAWING INDEX CODE NO.	SHEET NO.	REV. NO.
CRU2/P0139		VBS 1.1.1.1.2.2.6 00-90701	92X-5900-N-00142	N0001	0

R92n00143.m(6571.ws313) po139@ws313. Tue Jul 25 08:34:46 CDT 1995

7412

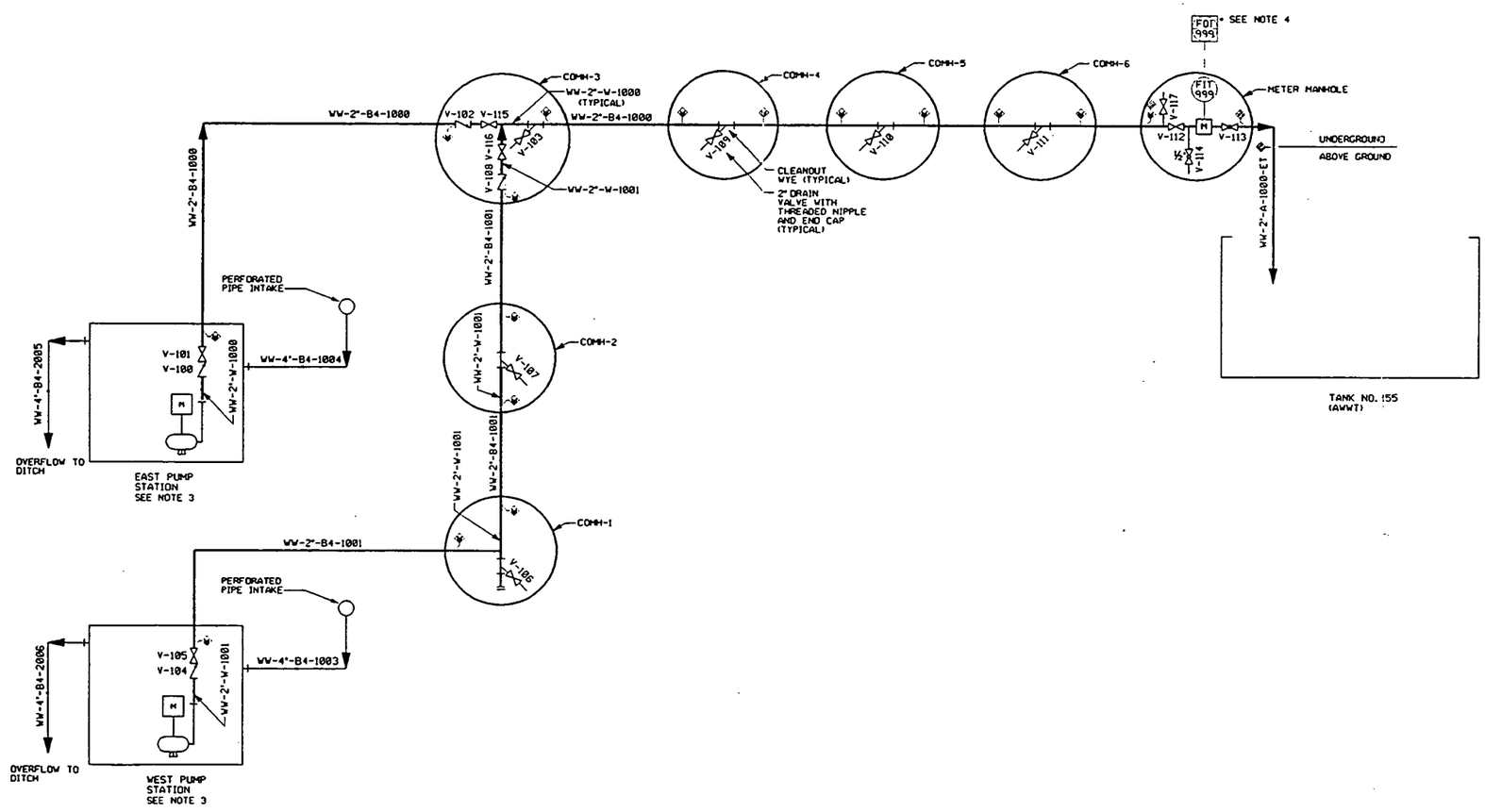

NOTES

1. FOR DRAWING INDEX SEE 92X-5900-X-00140.
2. FOR SYMBOLS AND LEGEND SEE 92X-5900-N-00142.
3. FOR PUMP CONTROLS AND INDICATORS SEE DRAWING 92X-5900-E-00122
4. "FOI-999" IS AN EXISTING REMOTE MULTIPLEXING UNIT LOCATED IN AWWT. REFER TO DRAWING 92X-5900-N-00172 FOR SPECIFIC IDENTIFICATION.
5. PUMP SPECIFICATIONS

A. CAPACITY:

	WEST PUMP	EAST PUMP
RATED FLOW, GPM	25	25
RATED TOTAL HEAD, FT.	180	160
MOTOR HP (MAX)	15	15
MAXIMUM RPM	3450	3450

B. CONSTRUCTION:

1) PUMP
HOUSING: CAST IRON
IMPELLER: CAST IRON, OPEN DESIGN FOR SOLIDS HANDLING, MULTIVANE
VOLUTE: CAST IRON, 2" DISCHARGE
SEAL: MECHANICAL TYPE
BEARINGS: BALL TYPE, PERMANENTLY LUBRICATED
SHAFT: STAINLESS STEEL

2) MOTOR
DESIGN: NEMA B
TYPE: ENCLOSED SUBMERSIBLE, AIR FILLED HOUSING
INSULATION CLASS: F
POWER SUPPLY: 460 VOLTS, 3 PHASE, 60 HERTZ
MOTOR PROTECTION: MOISTURE DETECTOR, BI-METALLIC SWITCHES IN EACH PHASE
POWER CABLE: 30 FEET, LEAKPROOF CABLE ENTRY

C. ACCESSORIES: DISCHARGE CONNECTION, GUIDE RAIL, UPPER GUIDE RAIL BRACKET, AND LIFTING CHAIN (SEE DRAWING 92X-5900-G-00134)

D. MANUFACTURER: FLYGT, ABS, OR EQUAL

LAST VALVE NUMBER | V-117

REF DWG NO.	DRAWING TITLE
92X-5900-X-00140	DRAWING INDEX
92X-5900-E-00122	SCHEMATIC, ELEVATIONS, AND DETAILS
92X-5900-G-00134	SITE DETAILS
92X-5900-N-00142	SYMBOLS AND LEGEND SHEET
92X-5900-N-00172	FLOW METER LOOP, DETAILS AND MISCELLANEOUS

000086

REV. NO.	ISSUE OR REVISION PURPOSE - DESCRIPTION	A-E	FEMCO	DATE
0	CERTIFIED FOR CONSTRUCTION			

UNITED STATES
DEPARTMENT OF ENERGY
FERNALD ENVIRONMENTAL MANAGEMENT PROJECT

THIS DRAWING PREPARED BY
PARSONS
THE RALPH M. PARSONS CO. - PARSONS MAIN, INC. - ENGINEERING-SCIENCE, INC.
CINCINNATI, OHIO

PROJECT NAME
SEEPAGE COLLECTION & REMOVAL OF SEDIMENT
REMOVAL ACTION NO. 30

DRAWING TITLE
MECHANICAL PROCESS
PIPING AND INSTRUMENTATION DIAGRAM
SF/IFP SEEPAGE COLLECTION SYS

DRAWN BY	DATE	LEAD ENGINEER	DATE	ORDERED BY	DATE
J. LAWSON	03/08/95			S. GHANTOUS	3/28/95

PLANT/BLDG. NO.	FLOOR	SCALE	CLASS
		NONE	

SUBMITTED FOR APPROVAL | FEMCO CRU APPROVAL
A-E DATE | DATE

PREPARED UNDER PARSONS PROJECT ORDER NUMBER	DOE PROJECT NO.	TSAP PROJECT NO.	DRAWING INDEX CODE NO.	SHEET NO.	REV. NO.
CRU2/P0139		WBS 1.1.1.1.2.2.6 00-90701	92X-5900-N-00143	N0002	0

R92n00172.m(797.ws412) po139@ws412. Mon Jul 31 15:57:20 CDT 1995

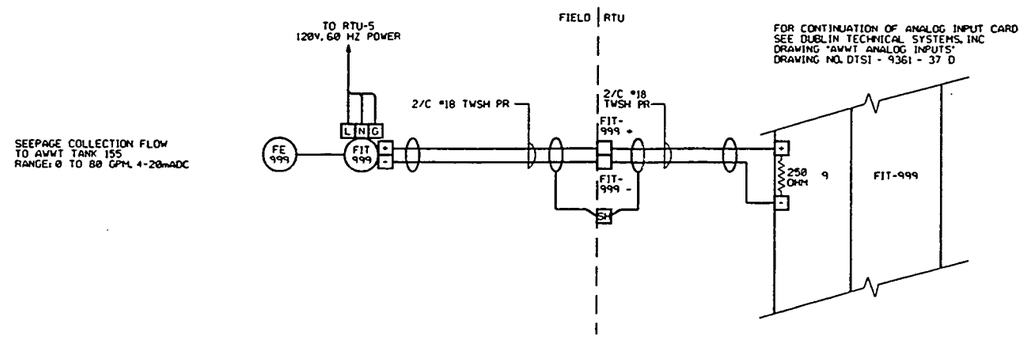

FIT-999 LOOP

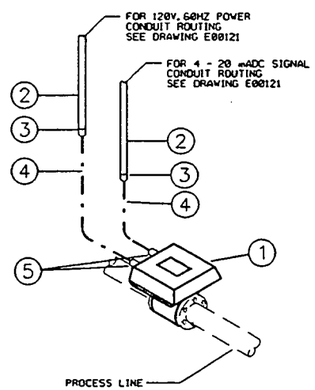

FIT-999
INDICATING FLOWMETER - MAGNETIC
WAFER STYLE

BILL OF MATERIAL

ITEM#	QUANTITY REQUIRED (NOTE 2)	UM	DESCRIPTION	NOTES	VENDOR CAT. NO.
1	1	EA	INDICATING MAGNETIC FLOW METER		FISCHER-PORTER: 10D-1475
2	AS REQ'D	FT	CABLE, ¾" CONDUIT AND FITTINGS		
3	2	EA	¾" NPT TO ½" LIQUID-TIGHT FLEX CONN.		
4	4 NOML	FT	½" LIQUID-TIGHT FLEX CONDUIT		
5	2	EA	½" NPT TO ½" LIQUID-TIGHT FLEX CONN.		

INDICATING FLOWMETER
MAGNETIC - WAFER STYLE
SPECIFICATIONS

LOOP TAG NO.		FIT-999
SERVICE		SEEPAGE COLLECTION METERING
LINE NO		WW-2"-A-1000-ET
P&ID NO		92X-5900-N-00143
SERVICE CONDITIONS		
FLUID		WASTE WATER
NORMAL FLOW		50 GPM
FLOW	MAX./MIN.	80/20 GPM
TEMPERATURE	MAX./MIN.	90/40°F
PRESSURE	MAX./MIN.	80/15 PSI
VELOCITY	MAX./MIN.	7.7/1.9 FT/SEC
CONDUCTIVITY	NORM./MIN.	>30 MICROMHOS/CC
SPECIFIC GRAVITY	MAX./NORM.	1.1/1.0 GR/CC
% SOLIDS	MAX./NORM.	2/1
MEASURING ELEMENT		
TUBE SIZE, SCHED.		2", SCHED.40
LINER MATERIAL		NOTE 5
END CONNECTIONS/TYPE MATERIAL		WAFER/NA
ELECTRODE MATERIAL		NOTE 6
METER CASING		MFG. STD.
GROUNDING TYPE/MATERIAL		INTERNAL/MFG. STD.
TRANSMITTER		
OUTPUT SIGNAL		4-20 mADC
CALIBRATED FLOW RANGE		0-80 GPM
CONDUIT CONN. SIZE		¾"NPT
MOUNTING		INTEGRAL
ENCLOSURE CLASS		NEMA 4X
POWER REQUIREMENT/ELECT. CODE		120V, 60HZ, GENERAL
INTEGRATOR		YES
ZERO RETURN		YES
ALARMS		NO
SPECIAL MODIFICATION		NO
EXTRA FEATURES OR REQUIREMENTS		NOTE 4

NOTES

1. CONTRACTOR SHALL PROVIDE ALL MISCELLANEOUS HARDWARE INCLUDING FITTINGS NOT IDENTIFIED IN THE BILL OF MATERIAL, IN ORDER TO PROVIDE A COMPLETE ASSEMBLY.
2. QUANTITIES ARE FOR ESTIMATES ONLY. ACTUAL QUANTITIES SHALL BE FIELD DETERMINED.
3. FOR DRAWING INDEX SEE DRAWING 92X-5900-X-00140.
4. FLOW INDICATOR SHALL BE MOUNTED SO THAT IT CAN BE VIEWED FROM THE TOP.
5. ACCEPTABLE MATERIALS OF CONSTRUCTION FOR THE LINER ARE CERAMICS AND TEFZEL.
6. ACCEPTABLE MATERIALS OF CONSTRUCTION FOR THE ELECTRODES ARE 316 SST, ZIRCONIUM AND PLATINUM.

7412

REF DWG NO.	DRAWING TITLE
92X-5900-X-00140	DRAWING INDEX
92X-5900-N-00143	MECHANICAL - PIPING AND INSTR. DIAGRAM
DTSI-9361-37D	DUBLIN TECHNICAL SYSTEMS, INC. AWWT ANALOG INPUTS
92X-5900-E-00121	ELECTRICAL-PLANS, EAST AND WEST PUMP STATIONS AND AWWT TANK 155

000087

REV. NO.	ISSUE OR REVISION PURPOSE - DESCRIPTION	A-E	FERNCO	DATE
0	CERTIFIED FOR CONSTRUCTION			

UNITED STATES
DEPARTMENT OF ENERGY
FERNALD ENVIRONMENTAL MANAGEMENT PROJECT

THIS DRAWING PREPARED BY
PARSONS
THE RALPH M. PARSONS CO. - PARSONS MAIN, INC. - ENGINEERING-SCIENCE, INC.
CINCINNATI, OHIO

PROJECT NAME
SEEPAGE COLLECTION & REMOVAL OF SEDIMENT
REMOVAL ACTION NO. 30

DRAWING TITLE
INSTRUMENTATION
FLOW METER LOOP
AND MISCELLANEOUS DETAILS

DRAWN BY	DATE	LEAD ENGINEER	DATE	CHECKED BY	DATE
C.L.INHARDT	10-17-95			J. COOPER	3/21/95
PLANT/BLDG. NO.		FLOOR		SCALE	CLASS
				NONE	

SUBMITTED FOR APPROVAL — A-E DATE
FERNCO CRU APPROVAL — DATE

PREPARED UNDER PAP/SOW PROJECT ORDER NUMBER	A-E PROJECT NO.	FERNCO PROJECT NO.	DRAWING INDEX CODE NO.	SHEET NO.	REV. NO.
CRU2/P0139		VBS 1.1.1.1.2.2.6 00-90701	92X-5900-N-00172	N0003	0

Attachment III

ATTACHMENT III

O&M PLAN

7412

Removal Action No. 30
Seepage Collection System for the South Field and Inactive Fly Ash Pile Operations and Maintenance Plan

Operable Unit 2
Project Order 139
August 1995
Revision 0

Environmental Remedial Action Project
Fernald Environmental Management Project
Fernald, Ohio
FERMCO Subcontract No. 2-21487

PARSONS

Fairfield Executive Center
6120 South Gilmore Road
Fairfield, Ohio 45014

000089

Removal Action No. 30
Seepage Collection System for the South Field and Inactive Fly Ash Pile Operations and Maintenance Plan

CONTENTS

SECTION

1.0 Introduction 1

2.0 System Description and Intended Performance 1

3.0 Operation 2
- 3.1 Description of Equipment 3
- 3.2 Start-Up 3
- 3.3 Pump Operation 4
- 3.4 Potential Operating Problems 5
- 3.5 Maintenance 7
- 3.6 Spare Parts 8

4.0 O&M Activities, Records, and Reports 7

5.0 References 8

APPENDICES

A Construction Drawings and Specification Notes

B Installation and Service Manual SPGH Submersible Grinder Pump - High Head and Accessories

C Bailey Fischer & Porter Data
- C1 Equipment Specification Sheet
- C2 Instruction Bulletin Magnetic Flow Meters 10 D 1475
- C3 Instruction Bulletin Magnetic Flow Meters 50 XM 1000

D Sample Copy of MWI PCP-100

LIST OF ILLUSTRATIONS

TABLES

4-1 Summary of O&M Records and Reports
4-2 Equipment Maintenance Schedule
4-3 Equipment Calibration Schedule

000091

LIST OF ACRONYMS AND ABBREVIATIONS

AWWT	Advanced Wastewater Treatment
CERCLA	Comprehensive Environmental Response, Compensation, and Liability Act
COMH	Clean-Out Manhole
CR	Control Relay
CS	Carbon Steel
DCS	Distributed Control System
gpm	gallons per minute
HDPE	High-Density Polyethylene
HOA	Hand-Off-Auto
NEMA	National Electrical Manufacturers Association
O&M	Operation and Maintenance
RCRA	Resource Conservation and Recovery Act

1.0 INTRODUCTION

The South Field and Inactive Fly Ash Pile are located southwest of the former production area. In the past, these units were used as disposal areas for nonprocess wastes, including boiler plant ash and construction debris. Much of the material in these units is contaminated with low concentrations of uranium. Water seeping through the disposed material into the ditches along the northern and eastern edges of the South Field and the western edge of the Inactive Fly Ash Pile has been observed to have uranium concentrations ranging from 23 to 910 micrograms per liter (FERMCO 1995). Water entering the ditches can travel downstream to areas where the Great Miami Aquifer outcrops. During dry seasons, the concentration of contaminants in water in the drainage ditches is higher due to lack of dilution when the seepage enters the ditches. In contrast, seepage during wet periods is diluted by relatively clean surface runoff.

The goal of the Seepage Collection System is to capture the seepage in its more contaminated state. The Seepage Collection System would collect contaminated seepage entering the existing drainage ditches.

2.0 SYSTEM DESCRIPTION AND INTENDED PERFORMANCE

The goal of the Seepage Collection System is to reduce impact on the Great Miami Aquifer due to contaminated seepage from the South Field and Inactive Fly Ash Pile.

The Seepage Collection System (see construction and specification drawings in Appendix A for detailed information) consists of the following:

1) East and West Pump Stations: Each pump station consists of a High-Density Polyethylene (HDPE) manhole; an 8-inch, perforated inlet pipe laid at the bottom of the ditch, connected to a 4-inch HDPE solid pipe leading to the sump; a 4-inch overflow pipe (the overflow pipe is screened to stop animal entry); and a 25 gallons per minute (gpm) submersible centrifugal grinder pump with water level controls.

2) Clean Out Manholes (COMHs): There are six COMHs provided at an approximate spacing of 500 feet. Each COMH is provided with a 2-inch drain gate valve and a 2-inch threaded nipple for draining the static head during service. In COMH No. 3, where the effluent lines from the East and West Pump Stations join together, two check valves are provided to block water from flowing into the opposite sump while only one pump is running.

3) Meter manhole: A meter manhole is provided near Tank No. 155 of the Advanced Wastewater Treatment (AWWT) facility, where the effluent line changes from underground to aboveground. This meter manhole houses a flow rate transmitter and manual shut-off valves (on either side of

the meter). A 2-inch gate valve is provided for drain and cleanout. A 1/2-inch globe valve is provided for drain and cleanout, and also to collect samples for periodic monitoring of seepage quality.

4) Pumps: The pump in each pump station is designed for an average flow of 25 gpm. The pump is water-level activated. The pump is activated by a high-level control and deactivated by a low-level control or overflow level control. During rainfall events that produce flow rates greater than 25 gpm, runoff will overflow the diversion berm and drain downstream into the existing ditches. The pumps will shut off when the water level reaches overflow level, and water inside the sump will drain out through the 4-inch overflow pipe. The pump is rail-mounted so that it can be lifted in and out of the sump during pump service and repair.

5) Effluent line: The seepage water collected in the sump will be pumped to the AWWT Plant Facility (Tank No. 155) through a 2-inch HDPE pipe. This 2-inch HDPE pipe is contained in a 4-inch HDPE pipe buried at about a 36-inch minimum depth. At the meter manhole the effluent line comes out of the ground and continues on a pipe rack to the top of Tank No. 155. The above-grade portion of the effluent line is made of 2-inch carbon steel (CS) carrier pipe and a 4-inch CS container pipe. The above-grade pipes are heat-traced and insulated.

3.0 OPERATION

Electrical power at 480 volts, three phase, is supplied to each sump pump station via an overhead power line. The power source is a 150-amp circuit breaker located in a power panel at the southwest corner of the AWWT Valve House, near the Stormwater Retention Basins.

Electrical controls at each pump station are identical. During maintenance, the pump may be run manually by placing the Hand-Off-Auto (HOA) switch in the "HAND" position. This will bypass the level controls, and the pump will continue to run until switched off, regardless of level. Motor overloads in the starter, and pump internal protection consisting of moisture sensor and winding temperature sensor will still protect the pump.

The inside of the main disconnect switch and starter should be inspected monthly for moisture. At this time the panels should be checked for any signs of physical damage and for operation of the push to test indicating lights.

000094

3.1 Description of Equipment

The pumps are electric motor-driven, submersible centrifugal grinder pumps with semi-open bronze impellers, cast iron housings and volutes, stainless steel shafts, mechanical seals, and permanently lubricated bearings. The pumps are designed for guide rail installation. Gate and globe valves are manually operated type, and check valves are swing type.

A 480 volt, three pole, main fused disconnect switch is located at the control panel within sight of each pump station. This switch may be used to disconnect all electrical power to the pump starter and local 120 volt distribution transformer/panel.

All electrical equipment enclosures are rated National Electrical Manufacturers Association (NEMA) 3 (weatherproof) (see specification notes on Drawing 92X-5900-E-00124), and shall be rack-mounted a short distance from, but within site of, each sump pump station.

A combination transformer/distribution panel is located at each pump station to provide 120-volt power for general lighting, and convenience receptacles for additional portable lighting and power tools. The 5 kVA "mini-power" zone has single phase, 480-volt primary and 120/240-volt secondary windings. Overload protection is provided by a 20-amp main circuit breaker on the primary and 30-amp main circuit breaker on the secondary of the transformer. The distribution panel has space for a maximum of six single-pole or three double-pole branch circuit breakers rated at 20 amps. There are currently four circuit breakers installed, with one spare, and two unused spaces.

The sump pump motor starter is in a NEMA 3 rated enclosure with extra space provided for installation of level controls. It is furnished with a main power fused disconnect switch and three pole contactor (NEMA size 1 or 2, depending on the horsepower of the pump purchased) with overload relay. A 480-120 volt transformer is provided for 120-volt control circuits.

Submersible pump power and control cable are furnished with pump and cable entry seal design to ensure a watertight and submersible seal.

3.2 Start-Up

See *Removal Action No. 30, Seepage Collection System for the South Field and Inactive Fly Ash Pile Start-Up Plan* (PARSONS 1995).

3.3 Pump Operation

During seepage collection, the pump will be operated with the HOA switch on the local starter set in the "AUTO" position. Pump start will be automatically initiated by water level when the water level in the sump reaches the HIGH level probe. This completes the circuit to the sensing relay located in the starter, which energizes the main contactor starting the pump. The circuit is maintained during pump down until the water level drops below the LOW level probe, which drops out the relay and the starter contactor. Operation of the pump is indicated by a red "pump running" indicating light on the front of the starter.

If a rainfall event occurs, the pump will operate in a similar manner, except with more frequent pumping cycles.

Should the rainfall increase to a point where the volume of water entering the sump exceeds the volume being pumped (in the range of 25 to 30 gpm), the water level in the sump will continue to rise past the HIGH level to the overflow (the smaller 1-1/2-inch intake), and the pump will continue to operate.

Should the volume continue to increase, water level in the sump will continue to rise, eventually reaching the "OVERFLOW" level probe. Contact of the water with this probe will energize another sensing relay, which, in turn, activates control relay CR1. The CR1 will de-energize the starter contactor, stopping the pump and at the same time energizing the amber-colored "OVERFLOW" indicating light on the starter.

The water level will continue to increase rapidly until reaching the 4-inch overflow, which will allow the water to exit the sump to a point downstream where it is discharged.

When the volume of water entering the sump is sufficiently diminished, water will continue to bleed off through the smaller overflow inlet, eventually receding below the OVERFLOW level probe. At this time the sensing relay will de-energize, causing the CR1 to revert to its normal state and allowing the pump to continue its normal operational cycle. Since the HIGH level probe is still submerged, the pump will start and pump down to the low level.

1) The pumps will normally be set on automatic operation, which will allow the pumps to cycle on and off under control of the sump water level probes. The manual valves should be in the positions shown below:

000096

Valve No.	Location	Position (Normal Operation)
V-101	East Pump Station	OPEN
V-103	COMH-3	CLOSED
V-105	West Pump Station	OPEN
V-106	COMH-1	CLOSED
V-107	COMH-2	CLOSED
V-109	COMH-4	CLOSED
V-110	COMH-5	CLOSED
V-111	COMH-6	CLOSED
V-112	Meter manhole	OPEN
V-113*	Meter manhole	OPEN
V-114	Meter manhole	CLOSED
V-115	COMH-3	OPEN
V-116	COMH-3	OPEN
V-117	Meter manhole	CLOSED

* The manual throttling valve (V-113) is a globe valve which is used to adjust flow to Tank No.155.

3.4 Potential Operating Problems

1) Description and Remedy:

Caution: Comply with current lockout/tagout procedures before attempting a remedy.

Problem	Result	Remedy
Pump fails to start	Sump fills to overflow	1) Refer to vendor Operations and Maintenance (O&M) Plan. 2) See if 480 volt power is energized. 3) Check selector switch position. 4) Check for tripped overload relay. 5) Check continuity of motor internal protection circuits (repair motor). 6) Check/repair level switch, wiring, or relays.

Problem	Result	Remedy
Pump fails to stop	Pump runs dry	1) Refer to vendor O&M Plan. 2) Check selector switch position. 3) Check/repair level switch, wiring, or relays. 4) Check contactor for welded contacts.
Pump check valve leaks	Sump refills quickly after pump stops, resulting in frequent cycling of pump.	Remove and repair valve (or replace).
Drain valve leaks	Water in manhole	Remove and repair or replace valve.
Pipeline plugs	1) No flow to tank	1) Determine where plug is located by opening the drain valves located in the manholes in successive order.
	2) Pump deadheads	2) Clean out pipeline from appropriate clean-out manhole.
Flow meter malfunction	No flow indication when there is known to be a flow, loop can not pass recalibration, or Distributed Control System (DCS) has a different reading for the flow.	1) Refer to vendor O&M Plan. 2) Repair or replace meter.
Foxboro DCS component fails	DCS flow indication is different from flow meter.	Repair or replace DCS component.
Signal wire broken or termination is bad	DCS indicates no flow when meter indicates there is flow.	Disconnect wires and check for conductivity. Replace signal wire if no conductance, otherwise re-do terminations.

000098

3.5 Maintenance

1) Valves: Follow procedures given in current applicable maintenance work instructions.
2) Pumps: Refer to pump O&M manuals and current applicable maintenance work instructions.
3) Meter: Refer to meter O&M manuals.

3.6 Spare Parts

1) One spare pump (25 gpm, 7.5 hp, 180 foot TDH)
2) One set of wear and tear parts (refer to vendor's installation and service manual)
3) One each 2 inch check valve, 2 inch gate valve, and 2 inch globe valve

4.0 O&M ACTIVITIES, RECORDS, AND REPORTS

Table 4-1 provides a list of operation and maintenance activities, calibration activities, and records and reports associated with the collection system, peripheral monitoring, safety, and regulatory compliance. The frequency of each activity is also included in the table. Further details on maintenance and calibration frequencies associated with system equipment are provided in Tables 4-2 and 4-3, respectively. Refer to Appendix C for vendor-recommended maintenance and calibration procedures. Fernald Environmental Restoration Management Corporation will maintain copies of all pertinent records and reports.

Table 4-1 - Summary of O&M Records and Reports

Report	Frequency
Maintenance and Calibration	
Pump Inspection Report	Annually
Piping Inspection Report	Annually
Valve and Control System Inspection Report	Annually
Equipment Calibration	See Table 4-3
Other Monitoring	
Check Sumps for Sediment*	Quarterly
Testing Total Uranium**	Quarterly
Testing for Total Suspended Solids**	Quarterly
Regulatory Compliance	
Compliance Monitoring Record	See Performance and Compliance Monitoring Plan

* Sediment to be hauled to CERCLA/RCRA Unit 2 sediment stockpile at Operable Unit 5 stockpile area next to the Stormwater Retention Basin.

** Perform testing in accordance with Sitewide CERCLA Quality Assurance Project Plan (SCQ).

Table 4-2 - Equipment Maintenance Schedule

Item	
Pump	Inspect per MWI PCP100*
East	Annually
West	Annually
Flow Meter	Semi-annually
Control Panel	Annually

*A sample copy of MWI PCP-100 is included in Appendix D.

Table 4-3 - Equipment Calibration Schedule

Item	Frequency
Flow Meter	Semi-Annually
Water Level Probes/Relays	Semi-Annually
Motor Starters	Annually
Motor Controls	Annually
Main Disconnect Switch	Monthly

5.0 REFERENCES

(FERMCO 1995) Fernald Environmental Restoration Management Corporation, January 1995. *Work Plan, Removal Action No. 31: Seepage Control to South Field and Inactive Fly Ash Pile*. U.S. Department of Energy Fernald Field Office.

(PARSONS 1995) Parsons ERA Project, 1995. *Removal Action No. 30, Seepage Collection System for the South Field and Inactive Fly Ash Pile Start-Up Plan*. Fairfield, OH: PARSONS.

000100

APPENDIX A

CONSTRUCTION DRAWINGS AND SPECIFICATION NOTES

R92x00139.m(784.ws412) po139@ws412. Mon Jul 31 14:46:38 CDT 1995

UNITED STATES DEPARTMENT OF ENERGY

FERNALD ENVIRONMENTAL MANAGEMENT PROJECT

SEEPAGE COLLECTION AND REMOVAL OF SEDIMENT AT THE SOUTHFIELD AND INACTIVE FLYASH PILE

REMOVAL ACTION NO. 30

OPERABLE UNIT 2 - PROJECT ORDER 139

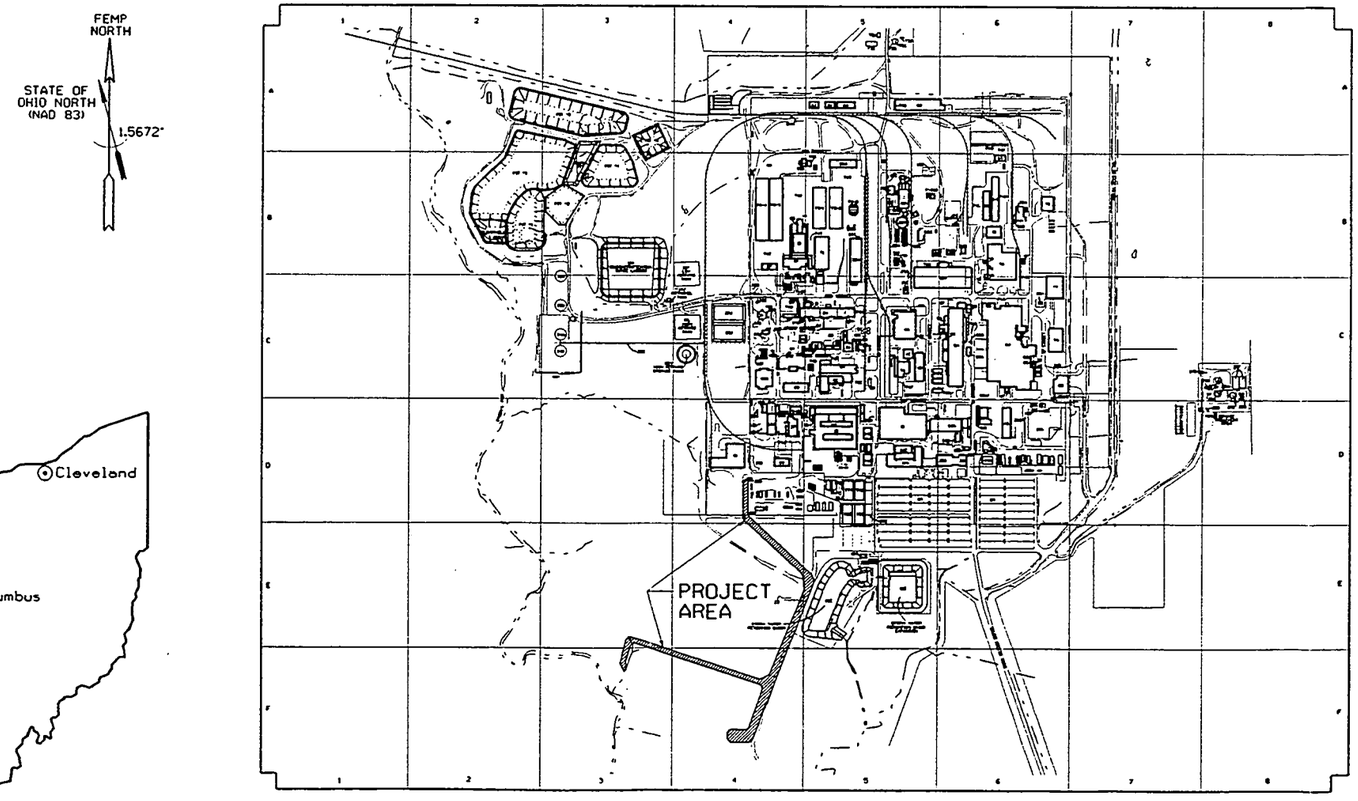

PARSONS

The Ralph M. Parsons Company • Parsons Main, Inc. • Engineering-Science, Inc.

ARCHITECTS - ENGINEERS
CINCINNATI, OHIO

NOTES

1. FOR DRAWING INDEX, SEE DRAWING 92X-5900-X-00140.

7412

REF DWG NO.	DRAWING TITLE
92X-5900-X-00140	DRAWING INDEX

000102

REV. NO.	ISSUE OR REVISION PURPOSE - DESCRIPTION	A-E	FERNALD	DATE
0	CERTIFIED FOR CONSTRUCTION			

INITIALS AND DATE

UNITED STATES DEPARTMENT OF ENERGY
FERNALD ENVIRONMENTAL MANAGEMENT PROJECT

THIS DRAWING PREPARED BY
PARSONS
THE RALPH M. PARSONS CO. - PARSONS MAIN, INC. - ENGINEERING-SCIENCE, INC.
CINCINNATI, OHIO

PROJECT NAME
SEEPAGE COLLECTION & REMOVAL OF SEDIMENT
REMOVAL ACTION NO. 30

DRAWING TITLE
PROJECT TITLE SHEET

DRAWN BY	DATE	LEAD ENGINEER	DATE	CHECKED BY	DATE
K.L. RABBITT	03/08/95			K. GERARD	03/17/95

PLANT/BLDG. NO. | FLOOR | SCALE: NONE | CLASS

SUBMITTED FOR APPROVAL | FERNALD DRU APPROVAL | A-E DATE | DATE

PROJECT ORDER NUMBER	DOE PROJECT NO.	FEMP PROJECT NO.	DRAWING INDEX CODE NO.	SHEET NO.	REV. NO.
CRU2/P0139		WBS 1.1.1.1.2.2.6 00-90701	92X-5900-X-00139	X0001	0

R92x00140.m(785.ws412) po139@ws412. Mon Jul 31 14:48:17 CDT 1995

NOTES

7412

INDEX OF DRAWINGS

INDEX CODE NO.	DRAWING NO.	SHEET NO.	REVISION NO.	DRAWING TITLE	REMARKS
	92X-5900-X-00139	X0001	0	PROJECT TITLE SHEET	
	92X-5900-X-00140	X0002	0	DRAWING INDEX	
	92X-5900-X-00141	X0003	0	LEGEND AND SYMBOLS	
	92X-5900-G-00125	G0001	0	CIVIL - MASTER SITE PLAN	
	92X-5900-G-00164	G0002	0	CIVIL - PIPELINE PLAN - EFFLUENT LINE AT AWWT	
	92X-5900-G-00133	G0003	0	CIVIL - PIPELINE PLAN - EFFLUENT LINE SOUTH FIELD (SF) AND INACTIVE FLY ASH PILE (IFP)	
	92X-5900-G-00135	G0004	0	CIVIL - GRADING PLAN - EAST PUMP STATION	
	92X-5900-G-00136	G0005	0	CIVIL - GRADING PLAN - WEST PUMP STATION	
	92X-5900-G-00134	G0006	0	CIVIL - SITE DETAILS - PUMP STATIONS	
	92X-5900-G-00137	G0007	0	CIVIL - SITE DETAILS - GENERAL	
	92X-5900-G-00163	G0008	0	CIVIL - SITE DETAILS - CLEANOUT MANHOLE	
	92X-5900-G-00173	G0009	0	CIVIL - SPECIFICATIONS	
	92X-5900-P-00145	P0001	0	PIPING / PLANT DESIGN - PIPE SUPPORTS - PLAN AND DETAILS	
	92X-5900-E-00120	E0001	0	ELECTRICAL - PLAN - PROJECT SITE PLAN	
	92X-5900-E-00121	E0002	0	ELECTRICAL - PLANS - EAST & WEST PUMP STATIONS AND AWWT TANK 155	
	92X-5900-E-00122	E0003	0	ELECTRICAL - SCHEMATIC, ELEVATIONS, AND DETAILS - EAST AND WEST PUMP STATIONS	
	92X-5900-E-00123	E0004	0	ELECTRICAL - ELECTRICAL DETAILS	
	92X-5900-E-00124	E0005	0	ELECTRICAL - ELECTRICAL INSTALLATION NOTES AND EQUIPMENT DESCRIPTIONS/SPECIFICATIONS	
	92X-5900-N-00143	N0001	0	MECHANICAL PROCESS - PIPING AND INSTRUMENTATION DIAGRAM - SOUTH FIELD AND INACTIVE FLY ASH PILE SEEPAGE COLLECTION SYSTEM	
	92X-5900-N-00142	N0002	0	MECHANICAL PROCESS - PIPING AND INSTRUMENTATION DIAGRAM - SYMBOLS AND LEGEND SHEET	
	92X-5900-N-00172	N0003	0	INSTRUMENTATION - FLOW METER LOOP, AND MISCELLANEOUS DETAILS	

000103

REV. NO.	ISSUE OR REVISION PURPOSE - DESCRIPTION	A-E	FERNCO	DATE
0	CERTIFIED FOR CONSTRUCTION			

INITIALS AND DATE

UNITED STATES
DEPARTMENT OF ENERGY
FERNALD ENVIRONMENTAL MANAGEMENT PROJECT

THIS DRAWING PREPARED BY
PARSONS
THE RALPH M. PARSONS CO. - PARSONS MAIN, INC. - ENGINEERING-SCIENCE, INC.
CINCINNATI, OHIO

PROJECT NAME
SEEPAGE COLLECTION & REMOVAL OF SEDIMENT
REMOVAL ACTION NO. 30

DRAWING TITLE
DRAWING INDEX

DRAWN BY	DATE	LEAD ENGINEER	DATE	CHECKED BY	DATE
K.L. RABBITT	03/08/95			K. GERARD	03/17/95

PLANT/BLDG NO.	FLOOR	SCALE	CLASS
		NONE	

SUBMITTED FOR APPROVAL — A-E — DATE
FERNCO CRU APPROVAL — DATE

PREPARED UNDER PARSONS PROJECT ORDER NUMBER	DOE PROJECT NO.	FEMP PROJECT NO.	DRAWING INDEX CODE NO.	SHEET NO.	REV. NO.
CRU2/P0139		VBS 1.1.1.1.2.2.6 00-90701	92X-5900-X-00140	X0002	0

R92x00141.m(786.ws412) p0139@ws412. Mon Jul 31 14:49:48 CDT 1995

GENERAL LEGEND

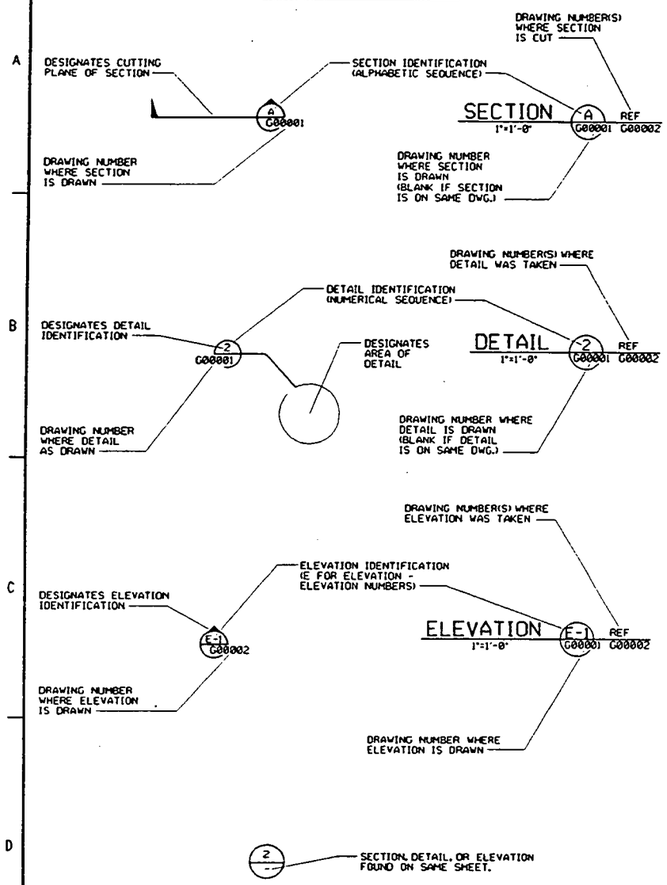

NOTE:

ABBREVIATED DRAWING NUMBERS WILL BE USED FOR ALL SECTIONS, DETAILS, ELEVATIONS, AND WITHIN NOTES AND CALL OUTS IN THE BODY OF THE DRAWING.

FOR EXAMPLE: 95X-5900-G-00002 = DRAWING NUMBER
G00002 = ABBREVIATED DRAWING NUMBER

DIMENSIONING:

DIMENSIONS AND/OR ELEVATIONS MARKED THUS (+/-) SHALL BE VERIFIED IN THE FIELD BY CONTRACTOR.

USE DIMENSIONS AS SHOWN, DO NOT SCALE.

NTS (NOT TO SCALE) IS SHOWN ONLY WHERE DIMENSION IS OBVIOUSLY OUT OF SCALE.

UTILITY SYMBOLS

EXISTING		PROPOSED
— — ST — —	STORM SEWER	—— ST ——
— — SN — —	SANITARY SEWER	—— SN ——
— — FG — —	FUEL GAS	—— FG ——
— — DW — —	DRINKING WATER	—— DW ——
— — FOI — —	FIRE PROTECTION	—— FOI ——
— — LS — —	LIVE STEAM	—— LS ——
— — WS — —	WATER SUPPLY	—— WS ——
— — WR — —	COOLING WATER RETURN	—— WR ——
— — TW — —	PROCESS WATER	—— TW ——
— — CE — —	CONTAMINATE WATER	—— CE ——
— — FT — —	FILTRATE OR EFFLUENT	—— FT ——
— — DF — —	DEIONIZED FEED	—— DF ——
— — PW — —	DEIONIZED WATER	—— PW ——
— — BR — —	BRINE	—— BR ——
— — RW — —	RAW WATER	—— RW ——
— — A — —	ALARM	—— A ——
— — CN — —	STEAM CONDENSATE	—— CN ——
— — VE — —	VENT LINES	—— VE ——
— — SD — —	SUB-SURFACE DRAINAGE	—— SD ——
— — SL — —	SUMP LIQUOR	—— SL ——
— — E — —	ELECTRICAL	—— E ——
— — OE —Ó—	OVERHEAD ELECTRICAL	—— OE ——
— — T — —	TELEPHONE	—— T ——
— — G — —	ELECTRIC GROUND	—— G ——
— — PA — —	PLANT AIR	—— PA ——
— — SA — —	INSTRUMENT AIR SUPPLY	—— SA ——
.....	ABANDONED EFFLUENT LINE	—— WW ——

BALLOON LEGEND

- PIV — POST INDICATOR VALVE
- SMH — SANITARY MANHOLE
- EMH — ELECTRICAL MANHOLE
- TMH — TELEPHONE MANHOLE
- CB — STORM SEWER CATCH BASIN
- HFH — HIGH PRESSURE FIRE HYDRANT
- LFH — LOW PRESSURE FIRE HYDRANT

GRADING SYMBOLS

EXISTING		PROPOSED
x 584.9	SPOT ELEVATION	x 585.4
— — 584 — —	CONTOUR - MINOR	584
— — 585 — —	CONTOUR - MAJOR	585
(TOE)	SLOPE INDICATOR	(TOE)

ARCHITECTURAL LEGEND

EXISTING		PROPOSED
	DOOR NUMBER	103
	ROOM NUMBER	101

SYMBOLS LEGEND

EXISTING		PROPOSED
	POST INDICATOR VALVE (PIV)	
	FIRE HYDRANT (FH)	
	MANHOLE (MH)	S OR D
	CATCH BASIN (CB)	D
	LIGHT POLE	
	PIPE SUPPORT	
	ELECTRICAL MANHOLE	E
	TELEPHONE MANHOLE	T
	STREET WASHERS	
	VALVE BOX	
(31)	MONITORING WELL	
	SURFACE DRAINAGE FLOW	
	POWER POLE (PP)	PP
	GRAVEL ROADWAY/DRIVEWAY	
	ASPHALT ROADWAY/DRIVEWAY	
	CONCRETE PAD/ ROADWAY/DRIVEWAY	
	BUILDING/TRAILER	
	RAILROAD TRACK	
	OU BOUNDARY	
	FENCE	
	TREE LINE	
	DECIDUOUS TREE	
	CONIFEROUS TREE	
	CENTERLINE DRAINAGE DITCH	
	RIVER/CREEK	
	TO BE REMOVED	
	SILT FENCE	
	ELECTRICAL TRANSFORMER	T
	TRANSMISSION TOWER	
	HEADWALL	OR
BM	BENCH MARK	
	CONSTRUCTION/WIND BARRIER FENCE	
	SIGN	
	BOLLARD/GUARD POST	
PB	ELECTRICAL PULL BOX	
	SURVEY CONTROL POINT	
	ROAD CENTERLINE OR BASELINE	
	BEND	OR
	TEE	
	THRUST BLOCK	
	REDUCER	
W OR U	UNKNOWN	
	STRAW BALE SILT BARRIER	
	FENCE GATE	

NOTES

1. FOR DRAWING INDEX, SEE DRAWING 92X-5900-X-00140.

7412

REF DWG NO.	DRAWING TITLE
92X-5900-X-00140	DRAWING INDEX

000104

REV. NO.	ISSUE OR REVISION PURPOSE - DESCRIPTION	A-E	FERNCO	DATE
0	CERTIFIED FOR CONSTRUCTION			

INITIALS AND DATE

UNITED STATES DEPARTMENT OF ENERGY
FERNALD ENVIRONMENTAL MANAGEMENT PROJECT

THIS DRAWING PREPARED BY
PARSONS
THE RALPH M. PARSONS CO. - PARSONS MAIN, INC. - ENGINEERING-SCIENCE, INC.
CINCINNATI, OHIO

PROJECT NAME
SEEPAGE COLLECTION & REMOVAL OF SEDIMENT
REMOVAL ACTION NO. 30

DRAWING TITLE
LEGEND AND SYMBOLS

DRAWN BY	DATE	LEAD ENGINEER	DATE	CHECKED BY	DATE
K.L. RABBITT	03/08/95			K. GERARD	03/17/95

PLANT/BLDG. NO. | FLOOR | SCALE: NONE | CLASS

SUBMITTED FOR APPROVAL (A-E, DATE) | FERNCO CRU APPROVAL (DATE)

PROJECT ORDER NUMBER	DOE PROJECT NO.	TEMP PROJECT NO.	DRAWING INDEX CODE NO.	SHEET NO.	REV. NO.
CRU2/P0139		VBS 1.1.1.1.2.2.6 00-90701	92X-5900-X-00141	X0003	0

R92g00125.m(787.ws412) po139@ws412. Mon Jul 31 14:59:57 CDT 1995

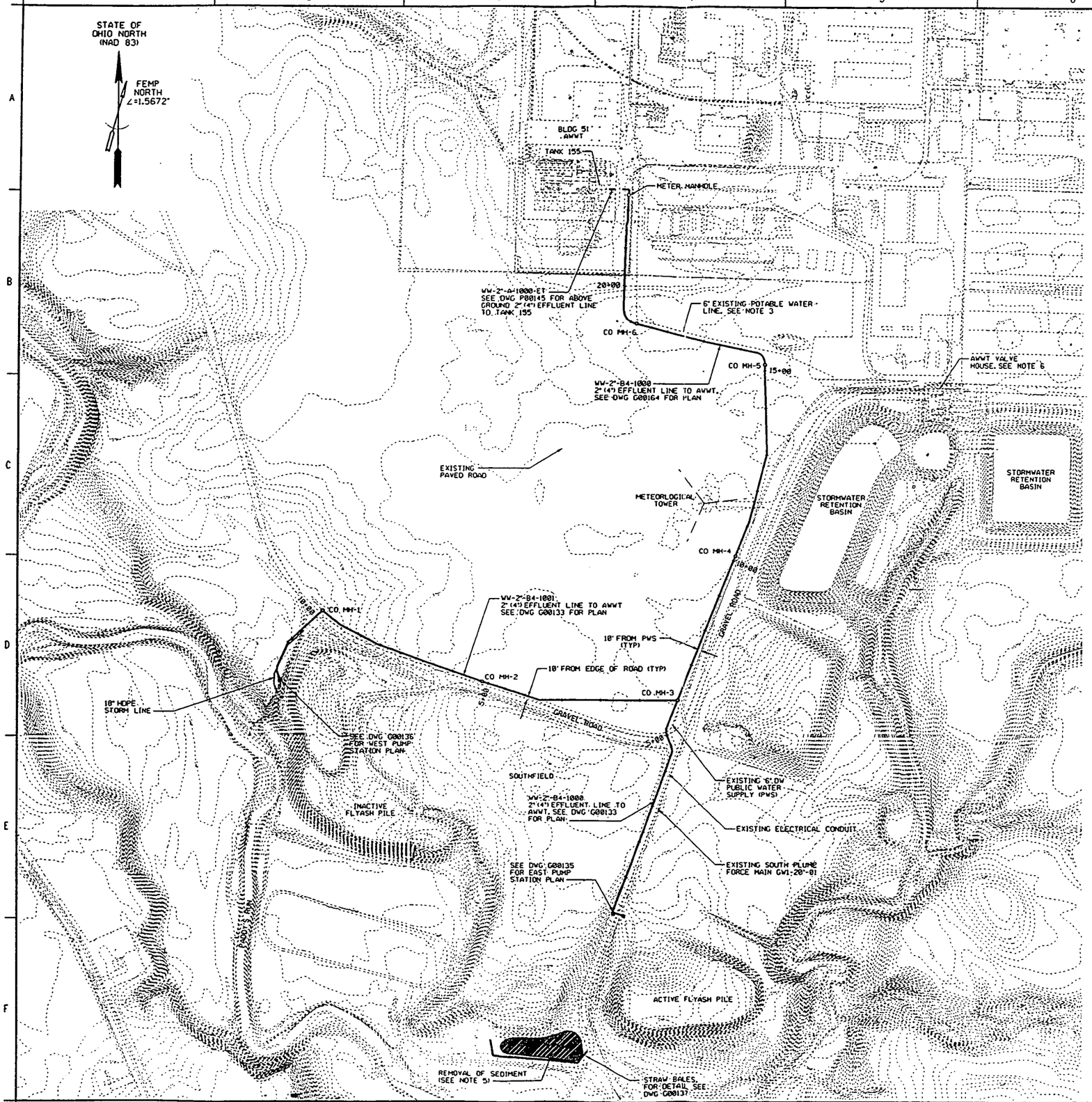

NOTES

7412

1. FOR DRAWING INDEX, SEE DRAWING 92X-5900-X-00140.
2. EXISTING CONDITIONS SHOWN ON THIS DRAWING WERE PREPARED FROM FEMP SITE PROVIDED DATA FROM DOCUMENTS LISTED BELOW:

   PARSONS TOPOGRAPHY 1992
   FEMP CADD GRID/UTILITY DRAWINGS
   FEMP CONTRACTOR PROJECT DESIGN DOCUMENTS
   B.L. PAYNE, FIELD SURVEY 2/95.
   FIELD RUN SURVEY AVAILABLE FOR: WEST PUMP STATION, EAST PUMP STATION AND PUBLIC WATER SUPPLY ROUTE.
3. 2" HDPE EFFLUENT LINE (INSIDE A 4" HDPE CONTAINMENT LINE) TO AWWT TO FOLLOW ROUTE OF 6" POTABLE WATER LINE. THE 6" LINE IS MARKED IN THE FIELD WITH POST AND SIGN (AT 50' SPACING) AND WITH A MAGNETIC TRACE WIRE.
4. THIS DRAWING IS A MASTER SITE PLAN ONLY. SEE PLAN DRAWINGS AS IDENTIFIED FOR UTILITIES AND DETAILS OF AREAS.
5. 900 CY OF SEDIMENT 18" DEEP OR LESS IS TO BE EXCAVATED IN ACCORDANCE WITH SITE PROCEDURES IN THIS AREA. LIMITS TO BE FIELD DETERMINED. AREA IS TO BE GRADED AND SEEDED UPON COMPLETION. SEDIMENT CONTROLS TO BE INSTALLED IN ACCORDANCE WITH SITE PROCEDURES.

   EXCAVATED SEDIMENT AND EXCESS SOIL SHALL BE HAULED AND STORED IN THE CATEGORY I STOCKPILE SOUTH OF THE STORM WATER RETENTION BASIN PER THE REMOVAL ACTION 17 WORK PLAN. ANY EXCAVATED SEDIMENT OR EXCESS SOIL FOUND TO EXCEED CATEGORY I CRITERIA SHALL BE PLACED IN THE PHASE I CONTROLLED STOCKPILE AS DEFINED IN THE REMOVAL ACTION 17 WORK PLAN. EXCAVATED SEDIMENT AND EXCESS SOIL EXCEEDING CATEGORY I CRITERIA SHALL BE TRANSPORTED IN ACCORDANCE WITH THE RADIOLOGICAL PERFORMANCE REQUIREMENTS MANUAL (RM-00201).
6. FOR ELECTRICAL SERVICE ROUTING AND POWER POLE LOCATIONS. SEE DRAWING 92X-5900-E-00120.
7. DISPOSAL AND STOCKPILE OF EXCESS CONSTRUCTION MATERIAL AND WASTE IS TO BE PERFORMED IN ACCORDANCE WITH SSOP 8044: MANAGEMENT OF SITE DEBRIS AND WASTE FROM A PROJECT.

REF DWG NO.	DRAWING TITLE
92X-5900-X-00140	DRAWING INDEX
92X-5900-G-00133	PIPELINE PLAN - EFFLUENT LINE SF & AFP
92X-5900-G-00135	GRADING PLAN - EAST PUMP STATION
92X-5900-G-00136	GRADING PLAN - WEST PUMP STATION
92X-5900-G-00137	SITE DETAILS - GENERAL
92X-5900-G-00164	PIPELINE PLAN - EFFLUENT LINE AT AWWT
92X-5900-E-00120	PLAN - PROJECT SITE PLAN
92X-5900-P-00145	PIPE SUPPORTS - PLAN AND DETAILS

000105

REV. NO.	ISSUE OR REVISION PURPOSE - DESCRIPTION	A-E	FERNCO	DATE
0	CERTIFIED FOR CONSTRUCTION			

INITIALS AND DATE

UNITED STATES DEPARTMENT OF ENERGY
FERNALD ENVIRONMENTAL MANAGEMENT PROJECT

THIS DRAWING PREPARED BY
PARSONS
THE RALPH M. PARSONS CO. - PARSONS MAIN, INC. - ENGINEERING-SCIENCE, INC.
CINCINNATI, OHIO

PROJECT NAME
SEEPAGE COLLECTION & REMOVAL OF SEDIMENT
REMOVAL ACTION NO. 30

DRAWING TITLE
CIVIL
MASTER SITE PLAN

DRAWN BY	DATE	LEAD DRAFTER	DATE	CHECKED BY	DATE
Y. AFSHAR	2-22-95			K. GERARD	3-17-95

PLANT/BLDG NO.	FLOOR	SCALE	CLASS
		1"=100'	

SUBMITTED FOR APPROVAL — A-E — DATE
FERNCO CRU APPROVAL — DATE

PREPARED UNDER PARSONS PROJECT ORDER NUMBER	CODE PROJECT NO.	FEMP PROJECT NO.	DRAWING INDEX CODE NO.	SHEET NO.	REV. NO.
CRU2/P0139		WBS 1.1.1.1.2.2.6 00-90701	92X-5900-G-00125	G0001	0

R92g00164.m(788.ws412) p0139@ws412. Mon Jul 31 15:12:07 CDT 1995

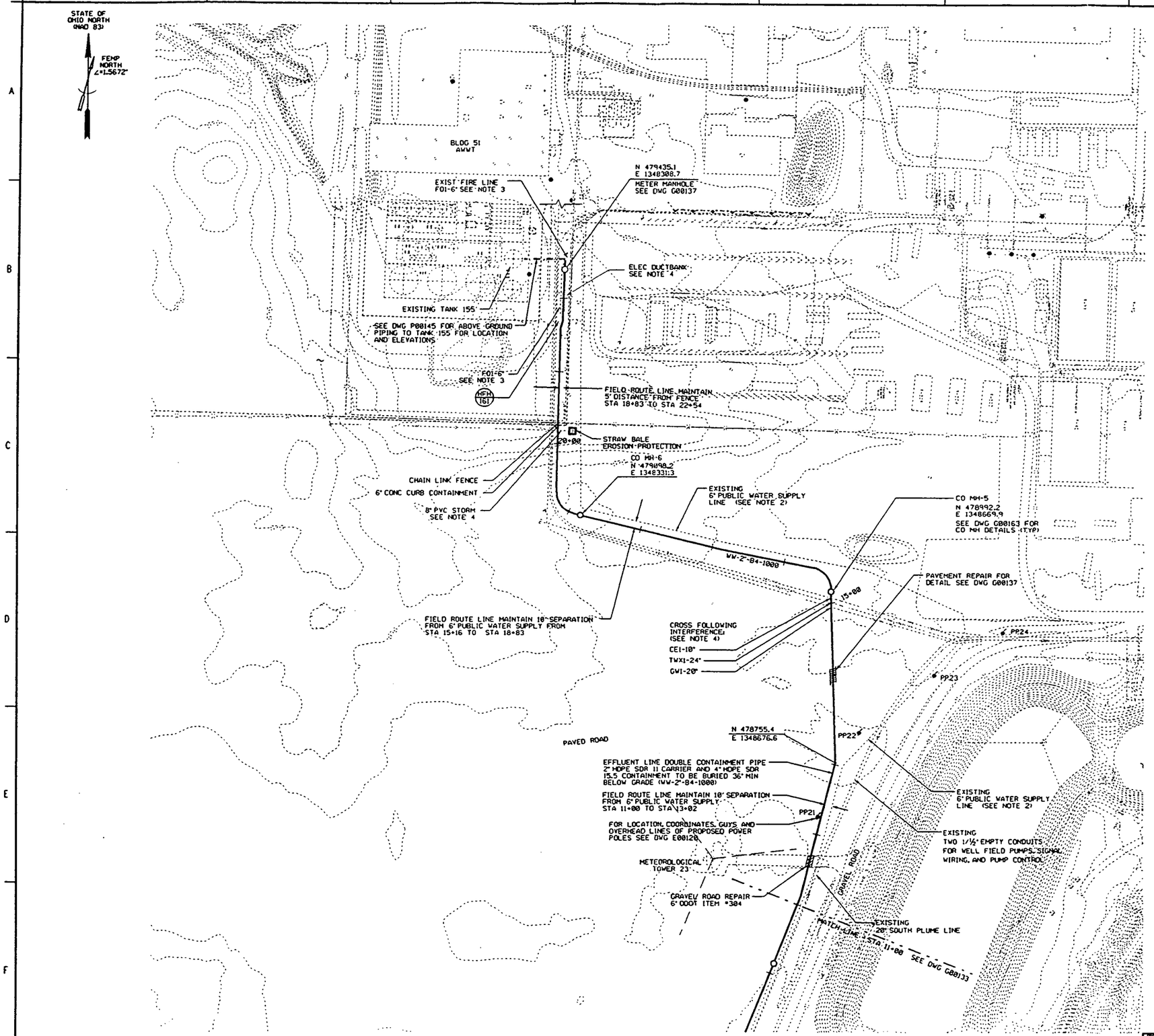

NOTES

1. EXISTING CONDITIONS SHOWN ON THIS DRAWING WERE PREPARED FROM FEMP SITE PROVIDED DATA FROM THE DOCUMENT LISTED BELOW:

   PARSONS TOPOGRAPHY 1992
   FEMP CADD GRID/UTILITY DRAWINGS
   FEMP CONTRACTOR PROJECT DESIGN DOCUMENTS
   B.L. PAYNE, FIELD SURVEY 2/95

2. 6" PUBLIC WATER SUPPLY LINE IDENTIFIED IN FIELD BY POSTED SIGNS AND MAGNETIC TRACE WIRE.
3. THE LOCATION OF UTILITIES AND FEATURES IN THIS AREA ARE APPROXIMATE. EXISTING UNDERGROUND UTILITIES NEED TO BE FIELD LOCATED, HAND PROBE PRIOR TO EXCAVATION TO VERIFY THAT EXCAVATION WILL NOT DISTURB THEM.
4. MAINTAIN 1 FOOT VERTICAL SEPARATION BETWEEN UTILITY LINES, SURFACE FEATURES AND 2" (4") EFFLUENT LINE. REMOVE AND REPLACE EXISTING CHAIN LINK FENCE AND REPAIR EXISTING CONCRETE CURB AFTER INSTALLATION OF THE EFFLUENT PIPE.

7412

REF DWG NO.	DRAWING TITLE
92X-5900-G-00133	PIPELINE PLAN - EFFLUENT LINE SF & IFP
92X-5900-G-00137	SITE DETAILS - GENERAL
92X-5900-G-00163	SITE DETAILS - CLEANOUT MANHOLE
92X-5900-E-00120	PLAN - PROJECT SITE PLAN
92X-5900-P-00145	PIPE SUPPORTS - PLAN AND DETAILS

000106

REV. NO.	ISSUE OR REVISION PURPOSE - DESCRIPTION	A-E	FERNCO	DATE
0	CERTIFIED FOR CONSTRUCTION			

INITIALS AND DATE

UNITED STATES DEPARTMENT OF ENERGY
FERNALD ENVIRONMENTAL MANAGEMENT PROJECT

THIS DRAWING PREPARED BY
PARSONS
THE RALPH M. PARSONS CO. - PARSONS MAIN, INC. - ENGINEERING-SCIENCE, INC.
CINCINNATI, OHIO

PROJECT NAME
SEEPAGE COLLECTION & REMOVAL OF SEDIMENT
REMOVAL ACTION NO. 30

DRAWING TITLE
CIVIL
PIPELINE PLAN
EFFLUENT LINE AT AWWT

DRAWN BY	DATE	LEAD DESIGNER	DATE	CHECKED BY	DATE
Y. AFSHAR	3-9-95			K.GERARD	3-28-95
PLANT/BLDG. NO.		FLOOR		SCALE 1"=50'	CLASS
SUBMITTED FOR APPROVAL		FERNCO CRU APPROVAL			
A-E	DATE		DATE		

PREPARED UNDER PARSONS PROJECT ORDER NUMBER	DOE PROJECT NO.	FEMP PROJECT NO.	DRAWING INDEX CODE NO.	SHEET NO.	REV. NO.
CRU2/P0139		WBS 1.1.1.1.2.2.6 00-90701	92X-5900-G-00164	G0002	0

R92g00133.m(789.ws412) po139@ws412. Mon Jul 31 15:28:06 CDT 1995

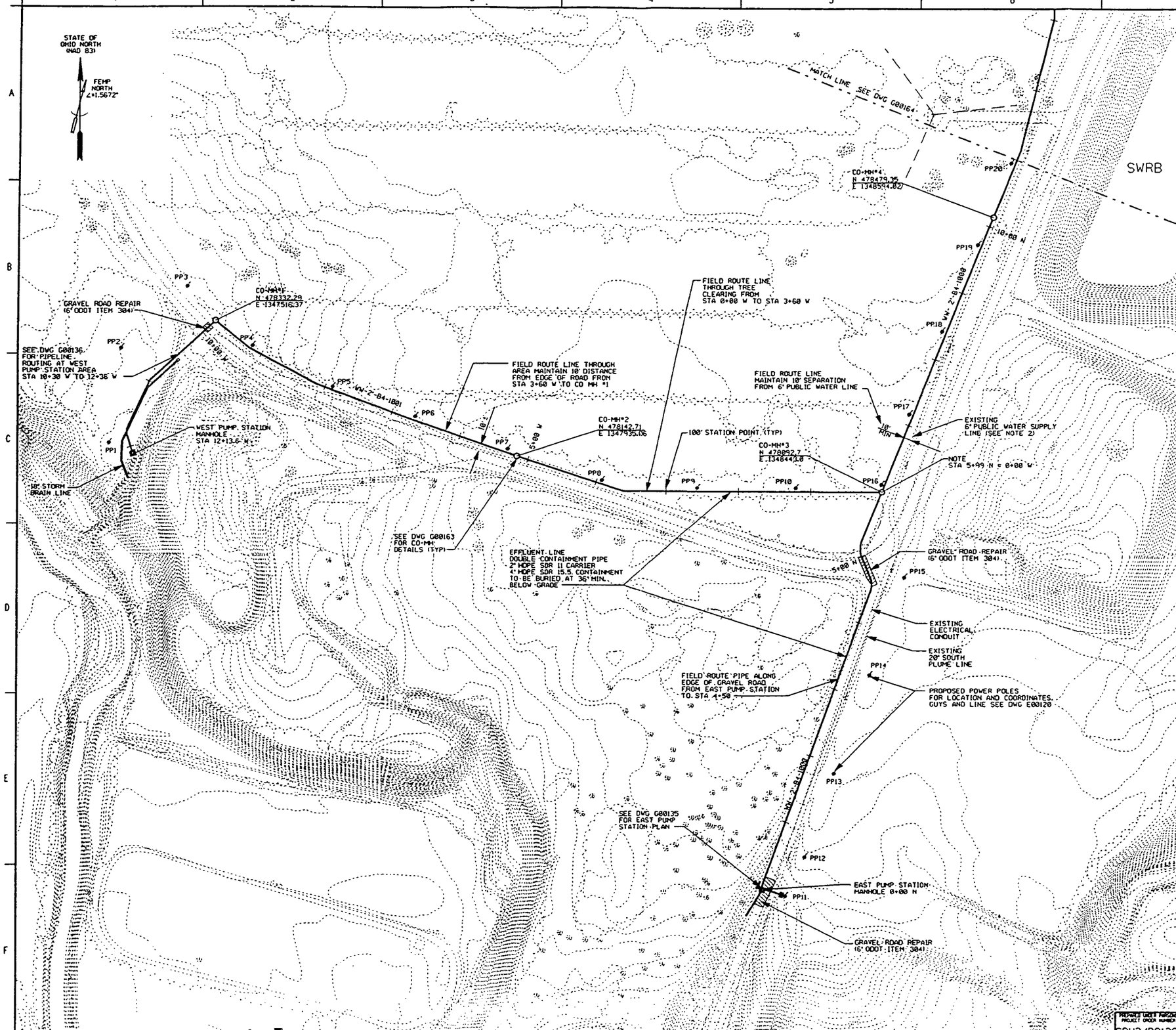

NOTES

1. EXISTING CONDITIONS SHOWN ON THIS DRAWING WERE PREPARED FROM FEMP SITE PROVIDED DATA FROM DOCUMENTS LISTED BELOW.

   EXISTING SITE DATA SOURCE (IN PLANT FILES)
   PARSONS TOPOGRAPHY, 1992
   FEMP CADD GRID/UTILITY DRAWINGS
   FEMP CONTRACTOR PROJECT DESIGN DOCUMENTS
   B.L. PAYNE FIELD SURVEY, 1995

2. 6" PUBLIC WATER SUPPLY LINE IDENTIFIED IN FIELD BY POSTED SIGNS AND MAGNETIC TRACE WIRE.

7412

REF DWG NO.	DRAWING TITLE
92X-5900-G-00136	GRADING PLAN - WEST PUMP STATION
92X-5900-G-00135	GRADING PLAN - EAST PUMP STATION
92X-5900-G-00163	SITE DETAILS - CLEANOUT MANHOLE
92X-5900-G-00164	PIPELINE PLAN - EFFLUENT LINE AT AWWT
92X-5900-E-00120	ELECTRICAL - PROJECT SITE PLAN

000107

REV. NO.	ISSUE OR REVISION PURPOSE - DESCRIPTION	A-E	FDNCO	DATE
0	CERTIFIED FOR CONSTRUCTION			

UNITED STATES DEPARTMENT OF ENERGY
FERNALD ENVIRONMENTAL MANAGEMENT PROJECT

THIS DRAWING PREPARED BY
PARSONS
THE RALPH M. PARSONS CO. - PARSONS MAIN, INC. - ENGINEERING-SCIENCE, INC.
CINCINNATI, OHIO

PROJECT NAME
SEEPAGE COLLECTION & REMOVAL OF SEDIMENT
REMOVAL ACTION NO. 30

DRAWING TITLE
CIVIL
PIPELINE PLAN
EFFLUENT LINE SF & IFP

DRAWN BY	DATE	LEAD DISCIPLINE	DATE	CHECKED BY	DATE
Y. AFHSAR	3-18-95			K. GERARD	3-28-95

PLANT/BLDG. NO.	FLOOR	SCALE	CLASS
		1"=50'	

SUBMITTED FOR APPROVAL — A-E — DATE
FDNCO CRU APPROVAL — DATE

DOE PROJECT NO.	TEMP PROJECT NO.	DRAWING PROJECT CODE NO.	SHEET NO.	REV. NO.
	VBS 1.1.1.1.2.2.6 00-90701	92X-5900-G-00133	G0003	0

PREPARED UNDER PURCHASE PROJECT ORDER NUMBER CRU2/P0139

R92g00135.m(790.ws412) po139@ws412. Mon Jul 31 15:32:59 CDT 1995

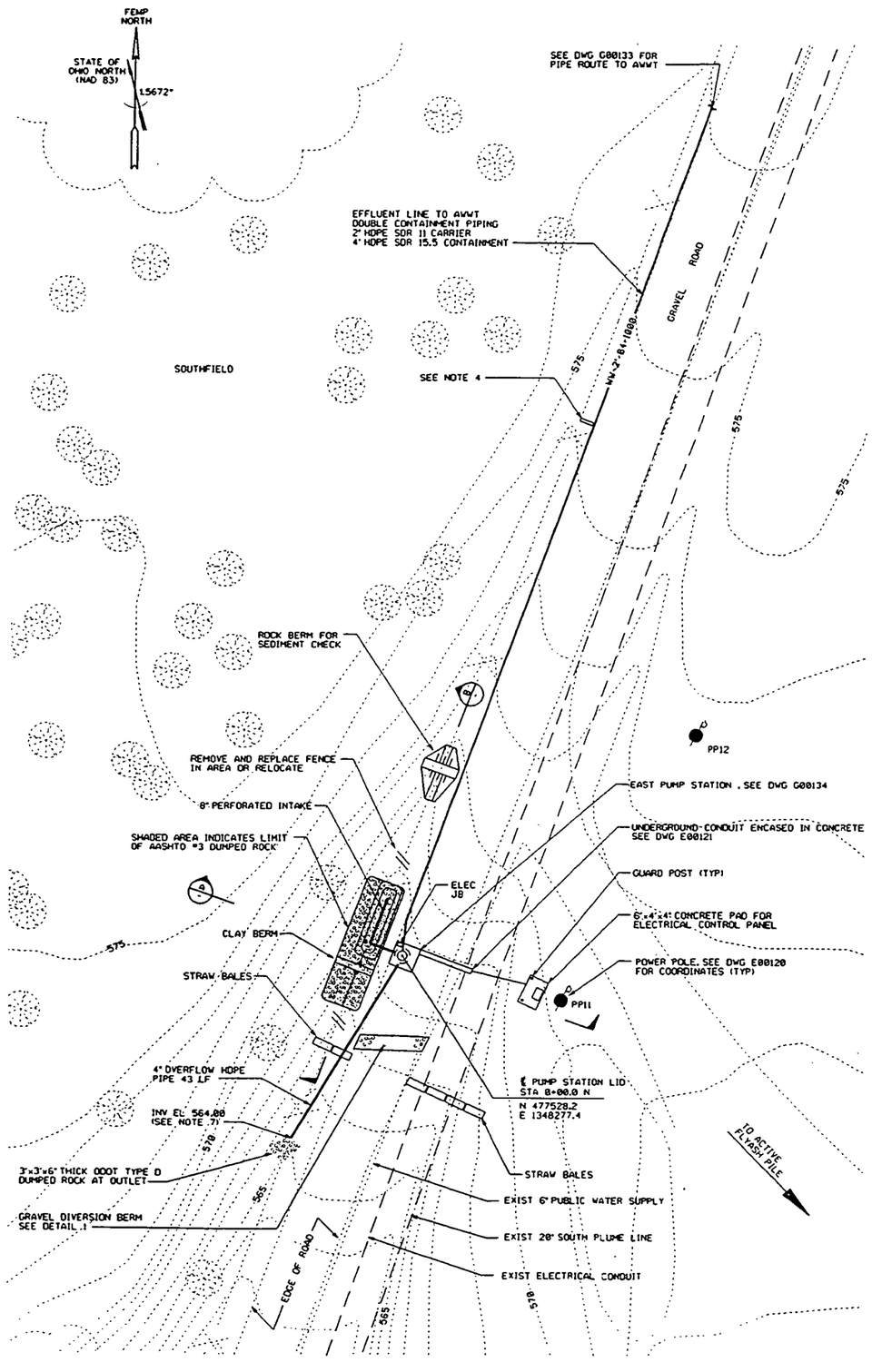

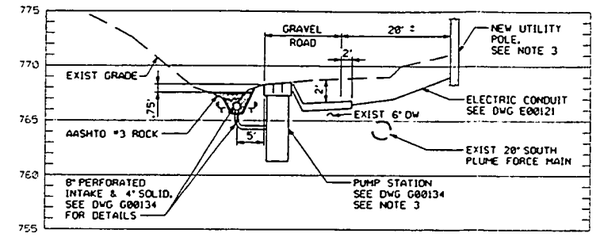

SECTION (A)
1" = 10' H
1" = 5' V

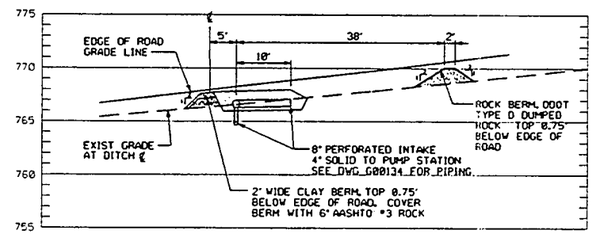

SECTION (B)
1" = 10' H
1" = 5' V

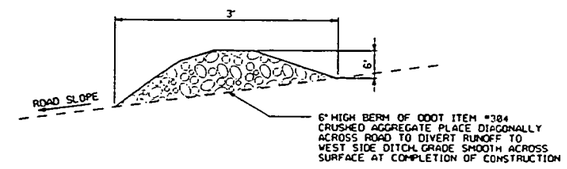

DETAIL (1)
NTS

NOTES

1. FOR DRAWING INDEX, SEE DRAWING 92X-5900-X-00140.
2. EXISTING CONDITIONS SHOWN ON THIS DRAWING WERE PREPARED FROM FEMP SITE PROVIDED DATA FROM THE DOCUMENT LISTED BELOW:

   PARSONS TOPOGRAPHY 1992
   FEMP CADD GRID/UTILITY DRAWINGS
   FEMP CONTRACTOR PROJECT DESIGN DOCUMENTS
   B.L. PAYNE, FIELD SURVEY 2/95.
3. THE EXISTING UNDERGROUND UTILITIES NEEDS TO BE FIELD LOCATED. HAND PROBE PRIOR TO EXCAVATION TO VERIFY THAT EXCAVATION WILL NOT DISTURB THEM.
4. INSTALL STRAW BALE DIKES EVERY 100' ACROSS WEST SIDE DITCH BETWEEN EAST PUMP STATION TO ROAD INTERSECTION.
5. CONCRETE SHALL BE ODOT ITEM 499, TYPE C, 4000 PSI UNLESS OTHERWISE NOTED.
6. FOR POWER POLE LOCATIONS, SEE DRAWING 92X-5900-E-00120.
7. FIELD SURVEY SHOWS DITCH INVERT IS LOWER IN ELEVATION THAN SHOWN (ON AERIAL TOPOGRAPHY) THROUGHOUT AREA. FIELD VERIFY ELEVATION PRIOR TO CONSTRUCTION.

7412

REF DWG NO.	DRAWING TITLE
92X-5900-X-00140	DRAWING INDEX
92X-5900-G-00134	SITE DETAILS - PUMP STATIONS
92X-5900-E-00121	ELECTRICAL - EAST PUMP LOCATION
92X-5900-G-00133	PIPELINE PLAN - EFFLUENT LINE SF AND IFP
92X-5900-E-00120	ELECTRICAL - PROJECT SITE PLAN

000108

REV. NO.	ISSUE OR REVISION PURPOSE - DESCRIPTION	A-E	FERNCO	DATE
0	CERTIFIED FOR CONSTRUCTION			

UNITED STATES
DEPARTMENT OF ENERGY
FERNALD ENVIRONMENTAL MANAGEMENT PROJECT

THIS DRAWING PREPARED BY
PARSONS
THE RALPH M. PARSONS CO. - PARSONS MAIN, INC. - ENGINEERING-SCIENCE, INC.
CINCINNATI, OHIO

PROJECT NAME
SEEPAGE COLLECTION & REMOVAL OF SEDIMENT
REMOVAL ACTION NO. 30

DRAWING TITLE
CIVIL
GRADING PLAN
EAST PUMP STATION

DRAWN BY	DATE	LEAD ENGINEER	DATE	CHECKED BY	DATE
R. ESPARZA	3-1-95			E. KUBRIN	3-18-95

PLANT/BLDG. NO.	FLOOR	SCALE	CLASS
		1"=10'	

SUBMITTED FOR APPROVAL: A-E DATE
FERNCO CRU APPROVAL: DATE

PREPARED UNDER PARSONS PROJECT ORDER NUMBER	DOE PROJECT NO.	FEMP PROJECT NO.	DRAWING INDEX CODE NO.	SHEET NO.	REV. NO.
CRU2/P0139		WBS 1.1.1.1.2.2.6 00-90701	92X-5900-G-00135	G0004	0

R92g00136.m(791.ws412) po139@ws412. Mon Jul 31 15:40:05 CDT 1995

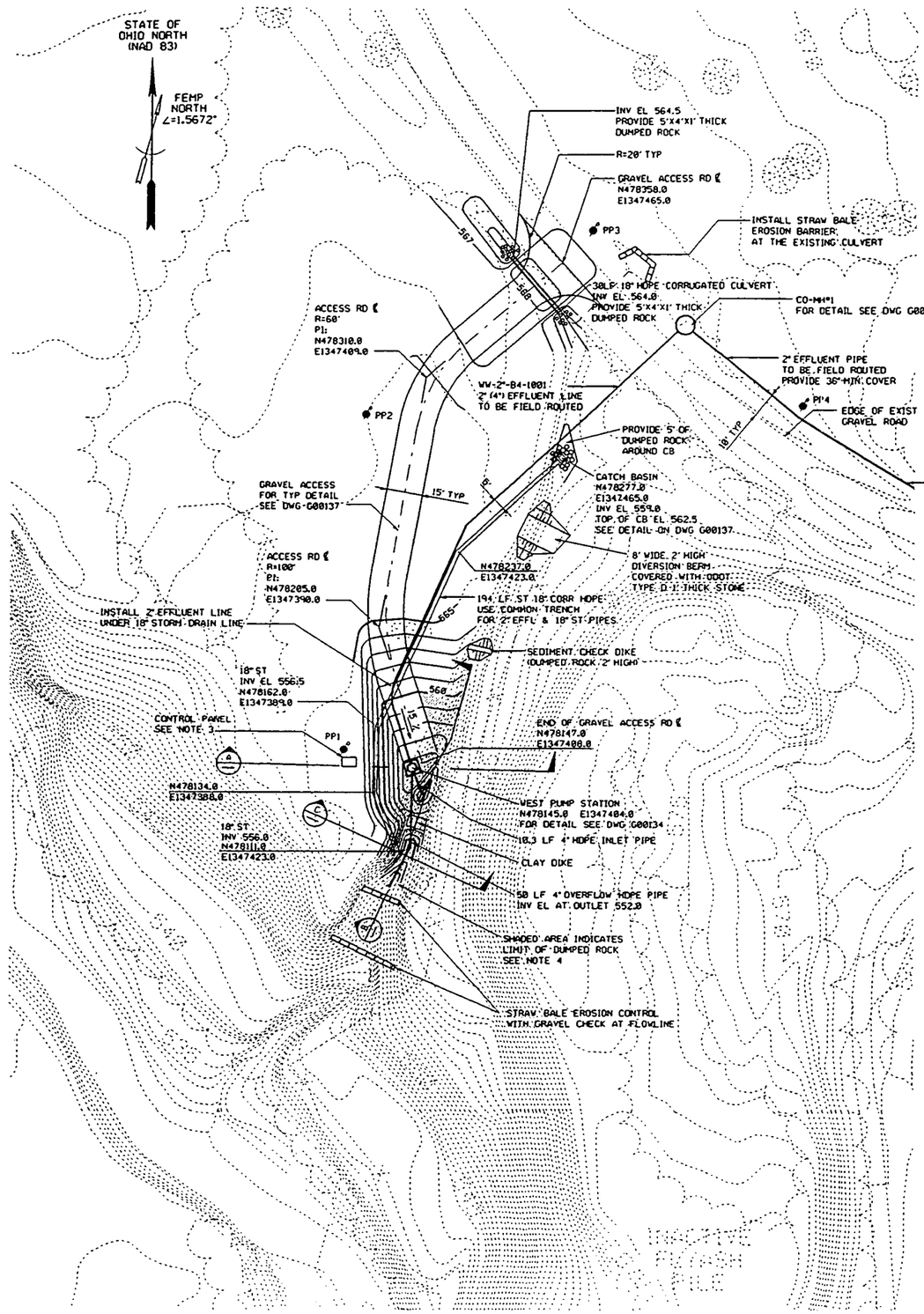

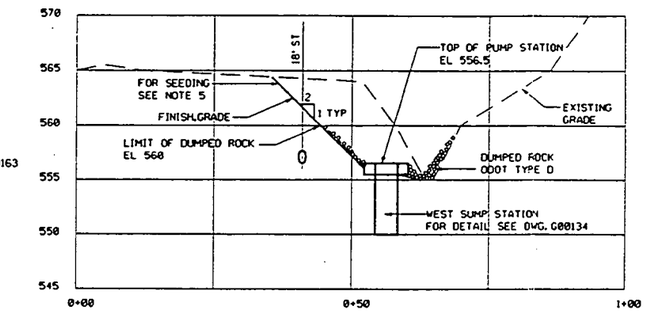

SECTION A
HOR: 1"=10'
VER: 1"=5'

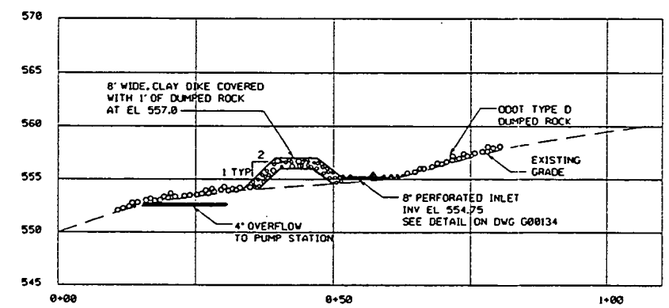

SECTION B
HOR: 1"=10'
VER: 1"=5'

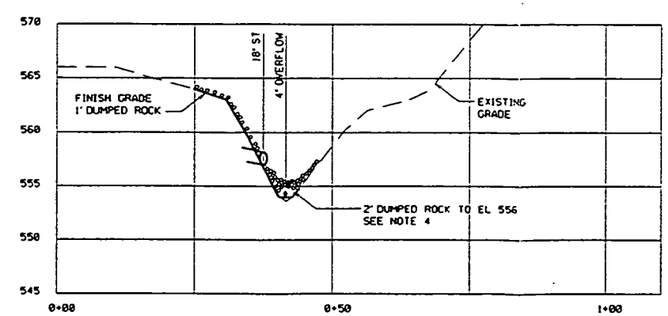

SECTION C
HOR: 1"=10'
VER: 1"=5'

NOTES

1. FOR DRAWING INDEX, SEE DRAWING 92X-5900-X-00140.
2. EXISTING CONDITIONS SHOWN ON THIS DRAWING WERE PREPARED FROM FEMP SITE PROVIDED DATA FROM THE DOCUMENT LISTED BELOW:

   PARSONS TOPOGRAPHY 1992
   FEMP CADD GRID/UTILITY DRAWINGS
   FEMP CONTRACTOR PROJECT DESIGN DOCUMENTS
   B.L. PAYNE, FIELD SURVEY 2/95.
3. FOR POWER POLE LOCATIONS, SEE DRAWING 92X-5900-E-00120. FOR LOCATION OF ELECTRICAL PANNEL SEE DWG 92X-5900-E-00121
4. DUMPED ROCK SHALL BE ODOT ITEM 601.08 TYPE D WITH A MINIMUM THICKNESS OF 1 FT UNLESS OTHERWISE NOTED.
5. HYDRO SEED GRADED AREA ABOVE DUMPED ROCK LIMIT. USE NORTH AMERICAN GREEN STRAW BLANKET (TYPE S75 OR EQUAL) FOR EROSION CONTROL.

7412

REF DWG NO.	DRAWING TITLE
92X-5900-G-00133	PIPELINE PLAN - EFFLUENT LINE SF & IFP
92X-5900-G-00134	SITE DETAILS - PUMP STATIONS
92X-5900-G-00137	SITE DETAILS - GENERAL
92X-5900-E-00120	PLAN - PROJECT SITE PLAN

000109

REV. NO.	ISSUE OR REVISION PURPOSE - DESCRIPTION	A-E	FERNCO	DATE
0	CERTIFIED FOR CONSTRUCTION			

INITIALS AND DATE

UNITED STATES
DEPARTMENT OF ENERGY
FERNALD ENVIRONMENTAL MANAGEMENT PROJECT

THIS DRAWING PREPARED BY
PARSONS
THE RALPH M. PARSONS CO. - PARSONS MAIN, INC. - ENGINEERING-SCIENCE, INC.
CINCINNATI, OHIO

PROJECT NAME
SEEPAGE COLLECTION & REMOVAL OF SEDIMENT
REMOVAL ACTION NO. 30

DRAWING TITLE
CIVIL
GRADING PLAN
WEST PUMP STATION

DRAWN BY	DATE	LEAD DISCIPLINE	DATE	CHECKED BY	DATE
Y. AFSHAR	2-28-95			K. GERARD	3-28-95

PLANT/BLDG. NO.	FLOOR	SCALE	CLASS
		1"=20'	

SUBMITTED FOR APPROVAL — A-E — DATE
FERNCO CNU APPROVAL — DATE

PROJECT UNDER PARSONS PROJECT ORDER NUMBER	DOE PROJECT NO.	FEMP PROJECT NO.	DRAWING SHEET CODE NO.	SHEET NO.	REV. NO.
CRU2/P0139		WBS 1.1.1.1.2.2.6 00-90701	92X-5900-G-00136	G0005	0

R92g00134.m(792.ws412) po139@ws412. Mon Jul 31 15:46:56 CDT 1995

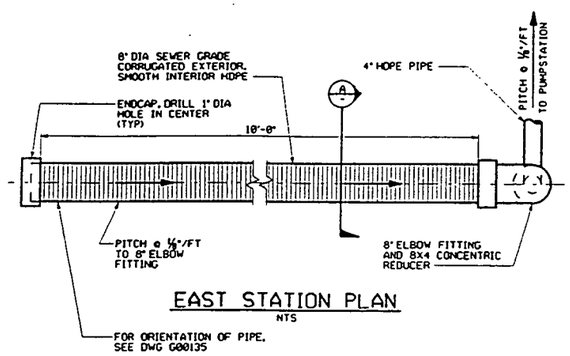

EAST STATION PLAN
NTS

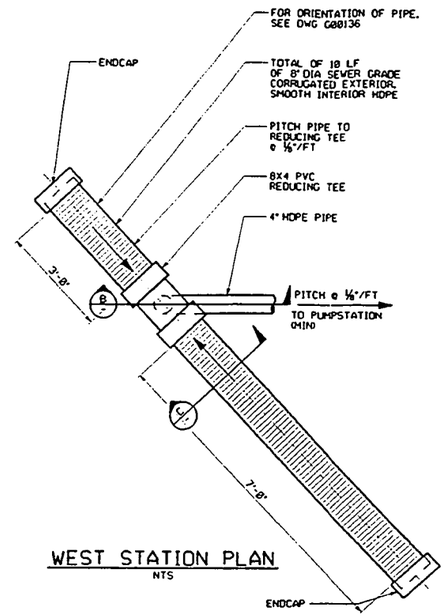

WEST STATION PLAN
NTS

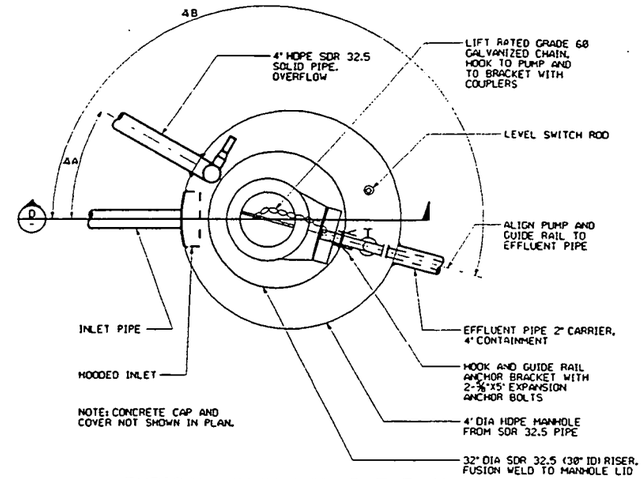

NOTE: CONCRETE CAP AND COVER NOT SHOWN IN PLAN.

TYPICAL PUMP MANHOLE PLAN
1"=1'-0"

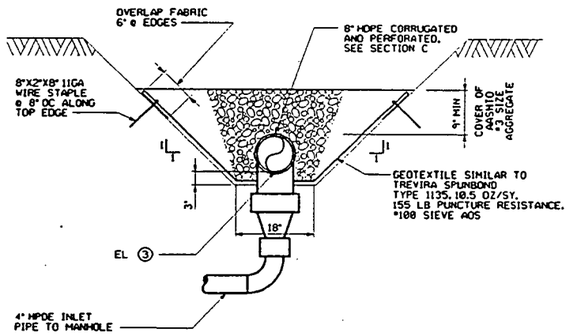

EAST STATION SECTION (A)
NTS

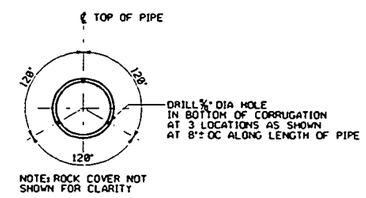

NOTE: ROCK COVER NOT SHOWN FOR CLARITY

SECTION (C)
1½"=1'-0"

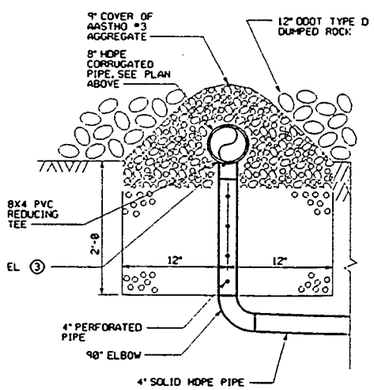

WEST STATION SECTION (B)
NTS

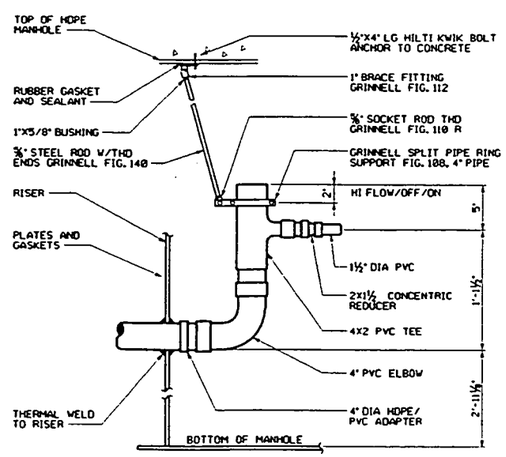

DETAIL (1)
1½"=1'-0"

TABLE NO. 1		
	EAST PUMP STA	WEST PUMP STA
ELEV ①	568.50	556.50
ELEV ②	561.50	550.00
ELEV ③	566.88	554.75
4A	280°-15'	21'
4B	72°-24'	183°

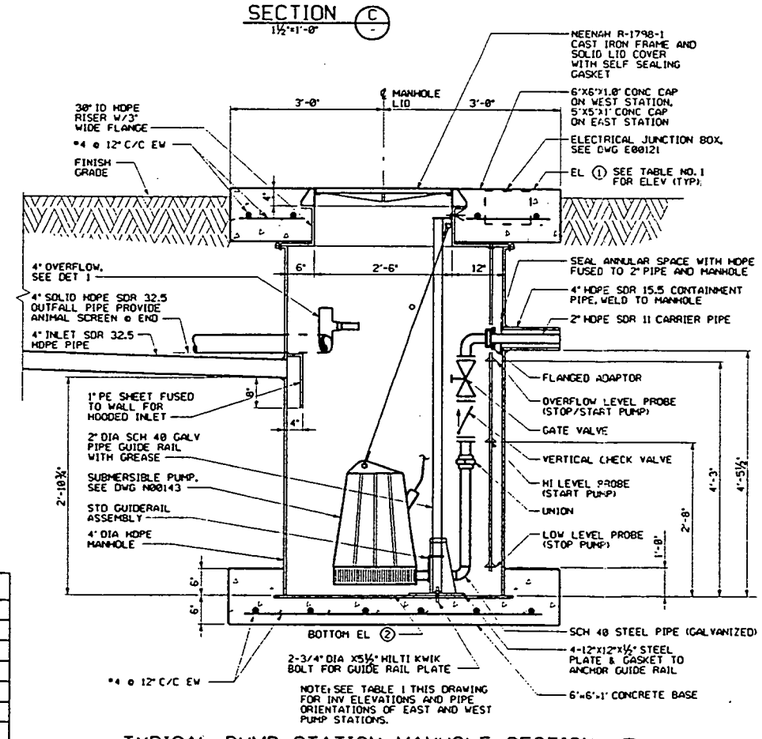

NOTE: SEE TABLE 1 THIS DRAWING FOR INV ELEVATIONS AND PIPE ORIENTATIONS OF EAST AND WEST PUMP STATIONS.

TYPICAL PUMP STATION MANHOLE SECTION (D)
NTS

NOTE 7412

GENERAL:

1. UNLESS OTHERWISE NOTED ALL MATERIALS SHALL CONFORM TO THE STATE OF OHIO DEPARTMENT OF TRANSPORTATION (ODOT) CONSTRUCTION AND MATERIAL SPECIFICATIONS DATED JANUARY 1, 1995.
2. AGGREGATE TO BE ODOT ITEM 703, AASHTO M43 AT THE SIZE INDICATED.

PIPE:

3. HDPE CORRUGATED PIPE SHALL BE SIMILAR TO ADVANCED DRAINAGE SYSTEMS (ADS) N-12 PIPE (SMOOTH INTERIOR, CORRUGATED EXTERIOR). FITTINGS TO BE COMPATIBLE WITH PIPE.
4. DUAL CONTAINMENT PIPE SHALL BE HDPE MATERIALS. SEE SPECIFICATIONS DWG 92X-5900-G-00173.
5. PENETRATIONS TO MANHOLE ARE TO BE WATERTIGHT. USE GASKETS OR THERMAL FUSE PIPE TO WALL.
6. PVC SHALL BE SCHEDULE 40 ASTM D1784 MATERIAL UNLESS OTHERWISE NOTED.

CONCRETE:

7. ODOT ITEM 499, CLASS C 4000 PSI AT 28 DAYS.
8. TOP SLOPE OF CONCRETE CAP AT EAST PUMP STATION SHALL MATCH EXISTING SLOPE OF ROAD.
9. EAST STATION SHALL HAVE NO. 6 REBAR AT 6" OC EACHWAY 2" FROM BOTTOM. REBAR TO BE ASTM A615, 60 KSI YIELD GRADE.
10. FOR DRAWING INDEX, SEE DRAWING 92X-5900-X-00140.
11. FOR VALVE SPECIFICATIONS, SEE DRAWING 92X-5900-G-00163.

REF DWG NO.	DRAWING TITLE
92X-5900-X-00140	DRAWING INDEX
92X-5900-G-00135	GRADING PLAN - EAST PUMP STATION
92X-5900-G-00136	GRADING PLAN - WEST PUMP STATION
92X-5900-E-00121	PLANS
92X-5900-N-00143	PIPING AND INSTRUMENTATION DIAGRAM

000110

REV. NO.	ISSUE OR REVISION PURPOSE - DESCRIPTION	A-E INITIALS	FERNCO INITIALS	DATE
0	CERTIFIED FOR CONSTRUCTION			

UNITED STATES
DEPARTMENT OF ENERGY
FERNALD ENVIRONMENTAL MANAGEMENT PROJECT

THIS DRAWING PREPARED BY
PARSONS
THE RALPH M. PARSONS CO. - PARSONS MAIN, INC. - ENGINEERING-SCIENCE, INC.
CINCINNATI, OHIO

PROJECT NAME
SEEPAGE COLLECTION & REMOVAL OF SEDIMENT
REMOVAL ACTION NO. 30

DRAWING TITLE
CIVIL
SITE DETAILS
PUMP STATIONS

DRAWN BY	DATE	LEAD ENGINEER	DATE	CHECKED BY	DATE
K.L. RABBITT	03-01-95			K. GERARD	03/28/95
PLANT/BLDG NO.		FLOOR		SCALE: AS SHOWN	CLASS
SUBMITTED FOR APPROVAL		FERNCO CRU APPROVAL			
A-E DATE		DATE			

DOE PROJECT NO.	FEMP PROJECT NO.	DRAWING INDEX CODE NO.	SHEET NO.	REV. NO.
	WBS 1.1.1.1.2.2.6 00-90701	92X-5900-G-00134	G0006	0

PREPARED UNDER PARSONS PROJECT ORDER NUMBER CRU2/P0139

R92g00137.m(793.ws412) po139@ws412. Mon Jul 31 15:49:09 CDT 1995

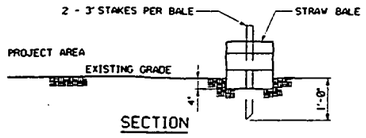

STRAW BALE EROSION CONTROL DETAIL

NTS

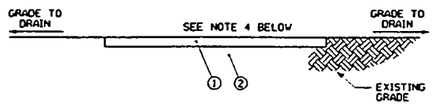

CRUSHED AGGREGATE ACCESS ROAD DETAIL

NTS

1. ODOT ITEM 304 STABILIZED CRUSHED AGGREGATE (1-6" COURSE).
2. COMPACT EXISTING GRADE TO 95% STANDARD PROCTOR.
3. SLOPE TO HAVE POSITIVE DRAINAGE.
4. WIDTH VARIES. SEE DIMENSIONS ON DRAWINGS.

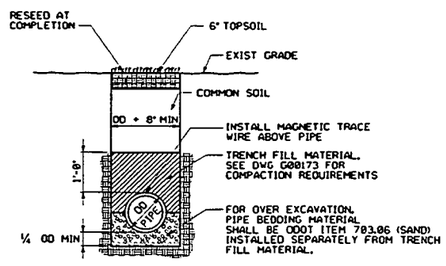

PIPE BEDDING DETAIL

NTS

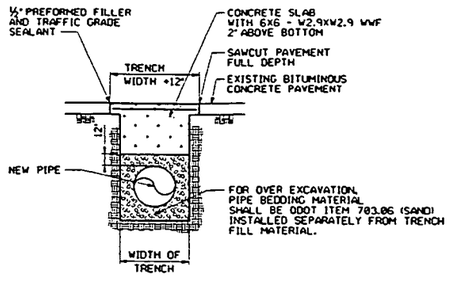

PAVEMENT REPAIR DETAIL

NTS

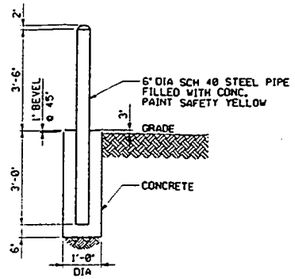

EXTERIOR GUARD POST DETAIL

NTS

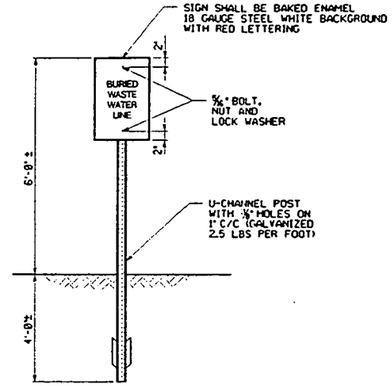

PIPE LINE SIGN DETAIL

NTS

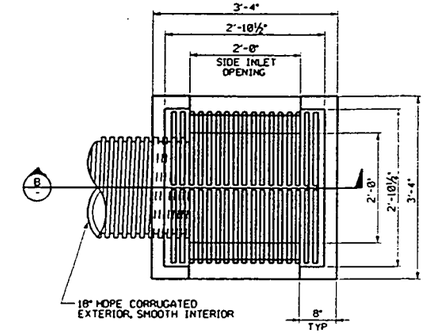

PLAN

NTS

NOTE: SEE DWG G 00136 FOR ELEVATIONS AND LOCATION

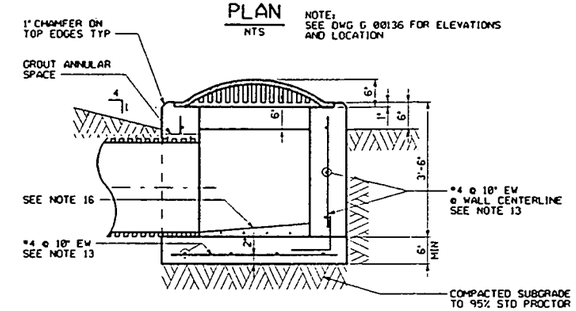

SECTION B

NTS

CATCH BASIN DETAIL

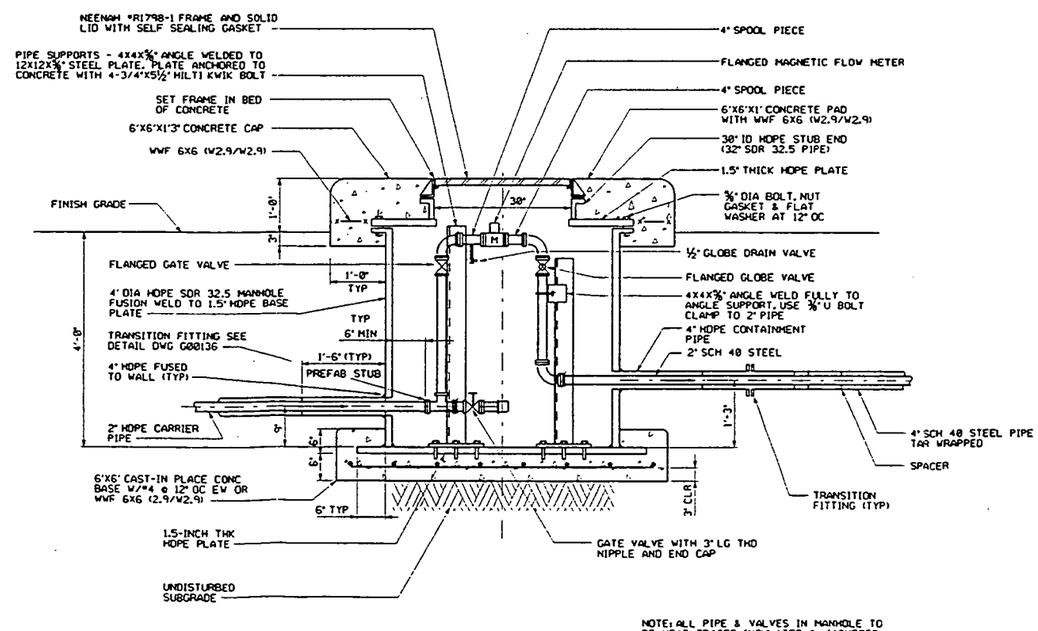

METER MANHOLE

NTS

NOTE: ALL PIPE & VALVES IN MANHOLE TO BE HEAT TRACED, INSULATED & JACKETED (SEE NOTE 8 DWG P00145)

NOTES

7412

GENERAL:

1. FOR DRAWING INDEX, SEE DRAWING 92X-5900-X-00140.
2. UNLESS OTHERWISE NOTED, ALL MATERIALS SHALL CONFORM TO THE STATE OF OHIO DEPARTMENT OF TRANSPORTATION (ODOT) CONSTRUCTION AND MATERIAL SPECIFICATIONS DATED JANUARY 1, 1993.
3. CONCRETE SHALL BE ODOT ITEM 499, CLASS C (4000 PSI AT 28 DAYS) UNLESS NOTED OTHERWISE.
4. SEE NOTE 1 ON DWG 92X-5900-G-00173.

SEDIMENT CONTROL NOTES:

5. UNLESS OTHERWISE NOTED, ALL MATERIALS AND WORK SHALL CONFORM TO ODOT ITEM 207.
6. INSPECT SEDIMENT CONTROL MEASURES AFTER EACH RAINFALL AND AT LEAST DAILY DURING PROLONGED RAINFALL. MAKE REPAIRS TO DAMAGED BALES, END RUNS, AND UNDERCUTTING OF THE BALES. REPLACE OR SUPPLEMENT BALES AS NECESSARY.
7. REMOVE SEDIMENT BUILDUP WHEN THE LEVEL OF DISPOSITION IS APPROXIMATELY ONE-HALF THE HEIGHT OF THE BARRIER.
8. APPLY CLEAN WATER TO CONTROL FUGITIVE DUST.
9. IF A DISTURBED AREA WILL NOT BE ACTIVELY WORKED ON FOR A PERIOD GREATER THAN 20 DAYS, IT SHALL BE TEMPORARILY SEEDED AND MULCHED.
10. STRAW BALES TO BE USED WHEN NATURAL GROUND IS LEVEL OR SLOPING AWAY FROM PROJECT.
11. PLACE STRAW BALES APPROXIMATELY PARALLEL TO BOTTOM OF FILL SLOPE.
12. STRAW BALES SHALL BE STANDARD SIZE 18" x 18" x 48".

CATCH BASIN NOTES:

13. CATCH BASIN SHALL BE PRECAST CONCRETE PER ODOT ITEM 499 CLASS C, 4000 PSI AT 28 DAYS AND SHALL MEET ODOT ITEM 706.13 REQUIREMENTS WITH 6 ± 2% AIR VOID CONTENT REINFORCING TO BE ASTM A615, 60 KSI YIELD GRADE. REINFORCING TO BE CONTINUOUS AT CORNERS. ALL LAPS 1'-4".
14. GRATE SHALL BE HEAVY DUTY, BEE HIVE SHAPE, WITH 600 SQUARE INCHES OF OPENING. SIMILAR TO EAST JORDAN IRON WORKS NO. 6610. DIMENSIONS OF INLET ARE BASED ON THIS GRATE. CHANGES IN GRATE MAY REQUIRE CHANGES TO THE INLET. ANY CHANGES SHALL BE APPROVED BY FERMCO CONSTRUCTION CONTRACTS MANAGER PRIOR TO ORDERING, FABRICATION, OR INSTALLATION OF ANY ITEM.
15. OPENINGS FOR PIPE SHALL BE OD +2".
16. THE OUTLET PIPE MAY BE PLACED ON TOP OF BOTTOM SLAB WITH THE BOTTOM SHAPED TO DRAIN WITH GROUT.
17. INVERT OF THE OUTLET PIPE IS 559.00'.
18. PROTECT PIPE AND CATCH BASIN FROM SILTATION DURING CONSTRUCTION BY INSTALLING STRAW BALE EROSION CONTROL BARRIER AROUND BASIN/PIPE INLET.

REF DWG NO.	DRAWING TITLE
92X-5900-G-00140	DRAWING INDEX
92X-5900-G-00136	GRADING PLAN - WEST PUMP STATION
92X-5900-G-00173	SPECIFICATIONS
92X-5900-G-00163	SITE DETAILS
92X-5900-P-00145	PIPE SUPPORTS

000111

REV. NO.	ISSUE OR REVISION PURPOSE - DESCRIPTION	A-E	FERMCO	DATE
0	CERTIFIED FOR CONSTRUCTION			

INITIALS AND DATE

UNITED STATES DEPARTMENT OF ENERGY
FERNALD ENVIRONMENTAL MANAGEMENT PROJECT

THIS DRAWING PREPARED BY
PARSONS
THE RALPH M. PARSONS CO. - PARSONS MAIN, INC. - ENGINEERING-SCIENCE, INC.
CINCINNATI, OHIO

PROJECT NAME
SEEPAGE COLLECTION & REMOVAL OF SEDIMENT
REMOVAL ACTION NO. 30

DRAWING TITLE
CIVIL
SITE DETAILS
GENERAL

DRAWN BY	DATE	LEAD ENGINEER	DATE	CHECKED BY	DATE
K.L. RABBITT	03-06-95			E. KUBRON	03/28/95

PERMIT/BLDG NO.	FLOOR	SCALE	CLASS
		AS SHOWN	

SUBMITTED FOR APPROVAL — A-E DATE
FERMCO CRU APPROVAL — DATE

PROJECT UNDER PARSONS PROJECT ORDER NUMBER	DOE PROJECT NO.	FEMP PROJECT NO.	DRAWING SHEET CODE NO.	SHEET NO.	REV. NO.
CRU2/P0139		VBS 1.1.1.1.2.2.6 00-90701	92X-5900-G-00137	G0007	0

R92g00163.m(794.ws412) po139@ws412. Mon Jul 31 15:51:05 CDT 1995

NOTES

E 7412

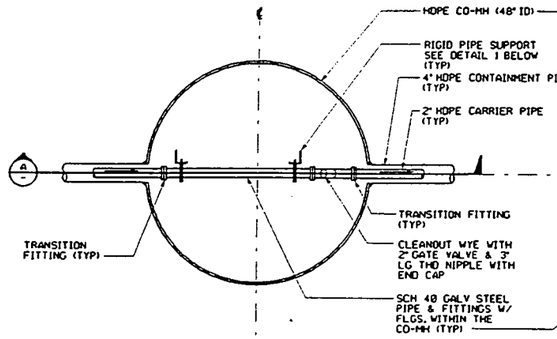

TYPE 1

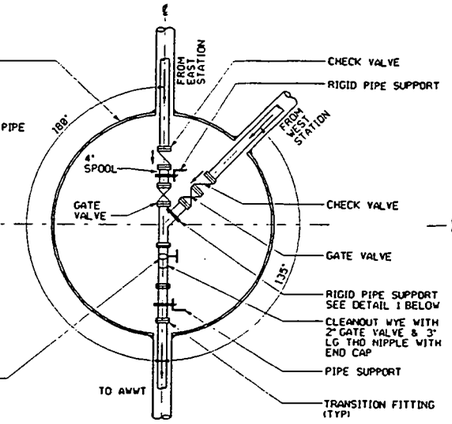

TYPE 2

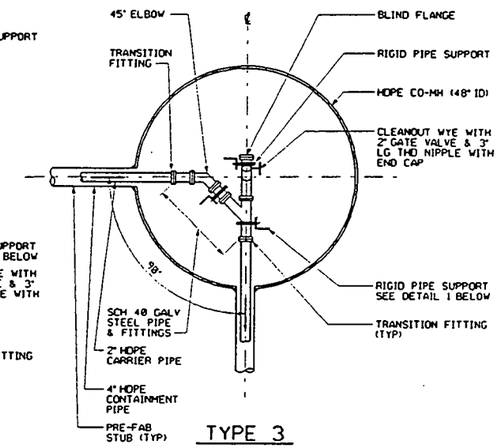

TYPE 3

TYPICAL CLEANOUT MANHOLE PLANS

1"=1'-0"

NOTE: SEE TABLE 1 FOR TYPE CLEANOUT OF SPECIFIC CO-MH

TABLE NO. 1

CLEAN OUT MANHOLE (CO MH)

CO-MH#	PLAN TYPE	VALVE ARRANGEMENT #
1	3	SEE PLAN
2	1	1
3	2	SEE PLAN
4	1	1
5	1	1
6	1	1

GENERAL:

1. FOR DRAWING INDEX, SEE DRAWING 92X-5900-X-00140.
2. CONNECT HOSE TO END AND RELIEVE STATIC HEAD PRESSURE INTO TANK PRIOR TO CLEAN OUT OPERATIONS.
3. FINAL DIMENSION OF LENGTH OF STEEL FITTINGS AND VALVES IN THE MANHOLES WILL VARY DUE TO EXPANSION AND CONTRACTION OF HDPE PIPE. PIPE AND MANHOLE SHOULD BE BURIED FOR 5 DAYS BEFORE SETTING FITTINGS AND ANCHOR SUPPORTS. EACH MANHOLE WILL NEED A SEPARATE MEASUREMENT.
4. THE FOLLOWING VALVE SPECIFICATIONS ARE:

   CHECK - BALL CHECK, CLASS 125, FLANGED, SIMILAR TO FLYGT HDL VALVE MODEL.

   GATE - IRON BODY, RISING STEM, CLASS 125, FLANGED, 150 PSI WOG.

   GLOBE - IRON BODY, BRONZE TRIM, YOKE BONNET, CLASS 125 FLANGED.
5. FUSION WELD BY MANUFACTURER ALL PIPE PENETRATIONS TO HDPE MANHOLE.
6. CONCRETE SHALL BE ODOT TYPE F, 3000 PSI. REBAR SHALL BE 60 KSI YIELD STRENGTH.

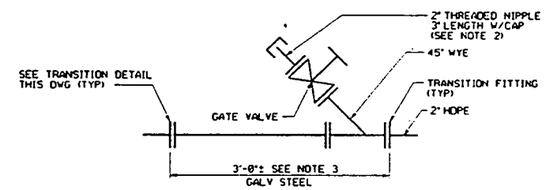

CO-MH VALVE ARRANGEMENT #1

NTS

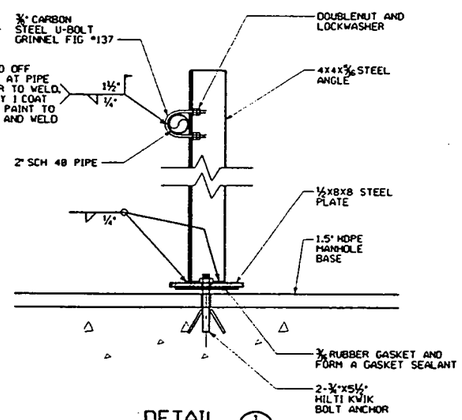

DETAIL 1

NTS

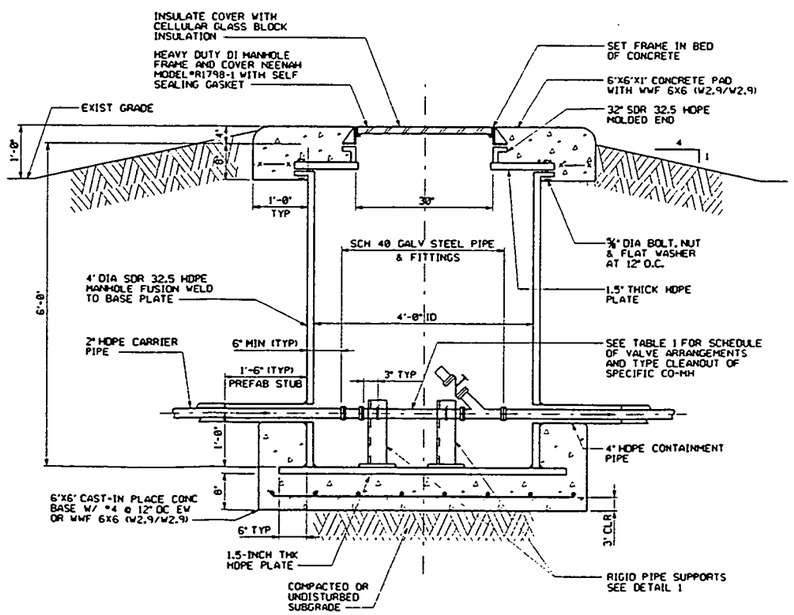

TYPICAL CLEANOUT - MANHOLE (CO-MH) SECTION A

1"=1'-0"

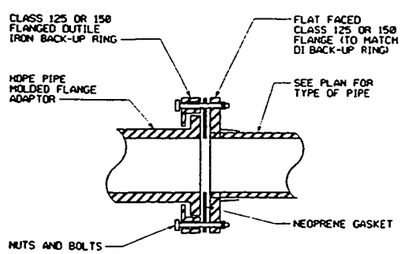

TRANSITION FITTING DETAIL

NTS

REF DWG NO.	DRAWING TITLE
92X-5900-X-00140	DRAWING INDEX
92X-5900-G-00137	SITE DETAILS

000112

REV. NO.	ISSUE OR REVISION PURPOSE - DESCRIPTION	A-E	FERNCO	DATE
0	CERTIFIED FOR CONSTRUCTION			

INITIALS AND DATE

UNITED STATES DEPARTMENT OF ENERGY
FERNALD ENVIRONMENTAL MANAGEMENT PROJECT

THIS DRAWING PREPARED BY
PARSONS
THE RALPH M. PARSONS CO. - PARSONS MAIN, INC. - ENGINEERING-SCIENCE, INC.
CINCINNATI, OHIO

PROJECT NAME
SEEPAGE COLLECTION & REMOVAL OF SEDIMENT
REMOVAL ACTION NO. 30

DRAWING TITLE
CIVIL
SITE DETAILS
CLEANOUT - MANHOLE

DRAWN BY	DATE	LEAD ENGINEER	DATE	CHECKED BY	DATE
K.L. RABBITT	10-18-95			K. GERARD	03/15/95

PLANT/BLDG. NO.	FLOOR	SCALE	CLASS
		AS NOTED	

SUBMITTED FOR APPROVAL — A-E — DATE
FERNCO DRU APPROVAL — DATE

PREPARED UNDER PARSONS PROJECT ORDER NUMBER	CDS PROJECT NO.	FTGP PROJECT NO.	DRAWING INDEX CODE NO.	SHEET NO.	REV. NO.
CRU2/P0139		VBS 1.1.1.1.2.2.6 00-90701	92X-5900-G-00163	G0008	0

R92g00173.m(795.ws412) po139@ws412. Mon Jul 31 15:52:38 CDT 1995

GENERAL

1. THE LISTING OF EQUIPMENT SUPPLIERS OR MATERIALS IN NO WAY PRECLUDES THE USE OF ALTERNATE SUPPLIERS OR MATERIALS FOR ANY ITEM TO BE FURNISHED WITHIN THE SCOPE OF THIS WORK. THE ITEMS AND SUPPLIERS SPECIFIED IS INTENDED TO IDENTIFY THE TYPE OF EQUIPMENT AND GENERAL QUALITY OF THAT EQUIPMENT. IT IS THE OFFERER'S RESPONSIBILITY TO PROPOSE EQUIPMENT THAT IS BEST SUITED FOR THIS PROJECT IN COMBINED TERMS OF QUALITY AND PRICE.

2. UNLESS OTHERWISE NOTED, ALL MATERIALS AND WORK SHALL CONFORM TO OHIO DEPARTMENT OF TRANSPORTATION (ODOT) CONSTRUCTION AND MATERIAL SPECIFICATIONS, DATED JANUARY 1, 1995

3. EXCESS CONSTRUCTION MATERIAL, DEBRIS AND WASTE SHALL BE DISPOSED OF IN ACCORDANCE WITH SITE STANDARD OPERATING PROCEDURE, SSOP-0044; MANAGEMENT OF SOIL, DEBRIS AND WASTE FROM PROJECT.

4. SUBCONTRACTOR SHALL FIELD VERIFY ALL LOCATIONS, DIMENSIONS, AND ELEVATIONS AND DISCREPANCIES SHALL BE RESOLVED PRIOR TO STARTING WORK. FERMCO SHALL PROVIDE AS-BUILT DRAWINGS INCLUDING INVERT AND TOP ELEVATIONS OF ALL CATCH BASINS, PUMP STATIONS, AND CLEAN OUTS AT COMPLETION OF CONSTRUCTION. AS-BUILT DRAWINGS WILL INCLUDE A FIELD RUN SURVEY PERFORMED BY A SURVEYOR REGISTERED IN THE STATE OF OHIO.

5. REFER TO THE PLANS AND DETAIL SHEETS FOR ADDITIONAL INFORMATION. FOR DRAWING INDEX, SEE DRAWING 92X-5900-X-00140.

DIVISION 2: SITE AND CIVIL ENGINEERING

02100 SITE CLEARING

PART 1 GENERAL

1.1 SITE CLEARING SHALL BE CLEARING, GRUBBING, SCALPING, REMOVAL OF TREES AND STUMPS, REMOVAL AND DISPOSING OF ALL VEGETATION AND DEBRIS, AND ROUGH GRADING OF SOIL WITHIN CONSTRUCTION LIMITS SHOWN.

1.2 IT WILL ALSO INCLUDE THE INSTALLATION OF PERIMETER SEDIMENT CONTROL MEASURES.

PART 2 MATERIAL
NOT USED

PART 3 EXECUTION

3.1 SEDIMENT CONTROL

A. INSTALL PERIMETER SEDIMENT CONTROL PRIOR TO ANY MASS CLEARING, GRUBBING, OR ROUGH GRADING.

3.2 CLEARING

A. REMOVE ONLY TREES, SHRUBS, STUMPS, AND VEGETATION AFFECTED WITHIN CONSTRUCTION LIMITS.

B. REMOVE FENCES, CURB, AND OTHER SURFACE FEATURES ALONG THE PROPOSED FORCE MAIN ROUTE NEAR THE AWWT. PROVIDE FOR TEMPORARY BARRIERS. FENCE MATERIAL SHALL BE SALVAGED TO THE EXTENT POSSIBLE AND TEMPORARILY STORED ON SITE IN A DESIGNATED AREA. REPLACE OR REPAIR FEATURES DISTURBED.

3.3 ROUGH GRADING

A. FERMCO CONSTRUCTION MANAGER WILL PROVIDE HORIZONTAL AND VERTICAL CONTROL POINTS. THE CONTRACTOR SHALL PROTECT THESE CONTROL POINTS THROUGHOUT CONSTRUCTION AND REPLACE THEM IF DAMAGED.

B. PROVIDE GRAVEL ROAD ACCESS TO WORK AREAS. THIS INCLUDES CONSTRUCTION ACCESS TO THE EXISTING ROADWAYS.

C. STRIP AND SALVAGE TOPSOIL SEPARATLY FROM SUBSOIL. SALVAGED TOPSOIL SHALL BE STOCKPILED IN AN AREA DESIGNATED BY THE FERMCO CONSTRUCTION CONTRACTS MANAGER AND PROTECTED FROM EROSION.

02200 EARTHWORK

PART 1 GENERAL

1.1 EARTHWORK SHALL INCLUDE EXCAVATION, TRENCHING, AND GRADING.

PART 2 MATERIAL
NOT USED

PART 3 EXECUTION

3.1 PREPARATION

A. THE SUBCONTRACTOR IS RESPONSIBLE FOR ALL EARTHWORK LAYOUT. VERIFY THAT SURVEY BENCHMARKS AND INTENDED ELEVATIONS FOR THE WORK ARE AS INDICATED.

B. IDENTIFY AND FLAG KNOWN UTILITY LOCATIONS WHICH EXIST IN THE CONSTRUCTION AREA. HAND PROBE TO LOCATE UNDERGROUND UTILITIES FOR ALL UTILITY POLE EXCAVATIONS, POLE GUY WIRE ANCHORS, EAST AND WEST PUMP STATIONS, AND FOR ALL UTILITY LINE CROSSINGS. PROVIDE PROTECTION FOR ALL UTILITIES IN THE WORK AREA.

C. THE SUBCONTRACTOR SHALL NOTIFY THE FERMCO CONSTRUCTION CONTRACTS MANAGER WHEN ACTUAL CONDITIONS DIFFER THAN SPECIFIED ON THE PLANS OR WHEN UNUSUAL OR UNSUITABLE SOIL CONDITIONS ARE ENCOUNTERED. THE PROBLEM SHALL BE RESOLVED PRIOR TO CONTINUING WORK.

D. SCHEDULE AND EXECUTE WORK SO THAT VEHICLE ACCESS IS MAINTAINED AT ALL TIMES THROUGH THE WORK ZONES TO THE EXTENT POSSIBLE.

E. INSTALL SEDIMENT CONTROL PRIOR TO EXCAVATION AND ROUGH GRADING. MAINTAIN CONTROLS THROUGHOUT CONSTRUCTION.

3.2 ERECTION/INSTALLATION/APPLICATION

A. EXCAVATION:

1. EXCAVATE SUBSOIL REQUIRED TO ACCOMMODATE PUMP STATIONS, ROADWAYS, REMOVAL OF SEDIMENT, AND TO ACHIEVE FINAL PROPOSED GRADE.

2. HAND TRIM EXCAVATION FOR PUMP STATIONS MANHOLES. REMOVE LOOSE MATERIAL.

3. SLOPE BANKS TO ANGLE OF REPOSE OR LESS, UNLESS SHORED.

4. STOCKPILE EXCESS SOIL ON SITE AT A LOCATION DESIGNATED BY THE FERMCO CONSTRUCTION CONTRACTS MANAGER. PROTECT THE STOCKPILE FROM EROSION.

5. CONTROL WATER BY MEANS OF DITCHES, CHECK DAMS, TEMPORARY PUMPS AND PIPING, OR OTHER METHODS ACCEPTABLE TO THE FERMCO CONSTRUCTION CONTRACTS MANAGER.

6. GRADING OF THE PROPOSED 2 HORIZONTAL:1 VERTICAL WESTERN SLOPE SOUTH FROM THE WEST PUMP STATION IS SENSITIVE AT THE TRANSITION IN TO THE EXISTING STEEP SLOPE. EXTREME CARE IS NECESSARY IN GRADING THIS AREA FOR WORKER SAFETY AND TO PREVENT ADDITIONAL SLOPE DEGRADATION.

B. TRENCHING:

1. CUT TRENCHES SUFFICIENTLY WIDE TO ENABLE INSTALLATION OF UTILITIES AND ALLOW INSPECTION. TRENCHES FOR PIPE LESS THAN 6 INCHES IN DIAMETER MAY BE EXCAVATED USING A TRENCHING MACHINE. FOLLOW PIPE MANUFACTURERS RECOMMENDATIONS.

2. HAND TRIM AS NECESSARY AND LEAVE FREE OF LOOSE MATTER.

C. BACKFILLING:

1. NO BACKFILL SHALL BE PLACED AROUND ANY CONCRETE STRUCTURE UNTIL IT HAS ATTAINED SATISFACTORY STRENGTH.

2. CUT OUT SOFT AREAS OF SUBGRADE NOT CAPABLE OF IN SITU COMPACTION. BACKFILL WITH ODOT ITEM 411 AND COMPACT TO DENSITY EQUAL TO OR GREATER THAN SUBSEQUENT FILL MATERIAL.

3. USE UNFROZEN AND UNSATURATED MATERIALS. PLACED IN CONTINUOUS LAYERS NOT EXCEEDING 8 INCHES LOOSE DEPTH. MAINTAIN OPTIMUM MOISTURE CONTENT, WITHIN 3 PERCENT, OF BACKFILL MATERIALS TO OBTAIN COMPACTION DENSITY. A LEAN CONCRETE, MINIMUM COMPRESSIVE STRENGTH OF 2,000 PSI MAY BE USED TO CORRECT OVER EXCAVATION.

4. FOR SOIL COMPACTION, MAINTAIN MOISTURE CONTENT, PLUS OR MINUS 3 PERCENT, OF OPTIMUM MOISTURE TO ATTAIN A MINIMUM DENSITY OF 95 PERCENT STANDARD PROCTOR, ASTM D698, AT ROAD CROSSINGS, MANHOLES, AND PUMP STATIONS, AND 90 PERCENT STANDARD PROCTOR AT ALL OTHER AREAS.

D. ADJUSTING AND CLEANING:

1. GRADING, FILLING, AND TOPSOIL TO BE PLUS OR MINUS 1 INCH OF INDICATED GRADE. RESHAPE AND RE-COMPACT FILLS SUBJECTED TO VEHICULAR TRAFFIC TO FINAL GRADE.

2. REMOVE SOIL STOCKPILES, LEAVING THE AREA IN A CLEAN AND NEAT CONDITION. GRADE AND STABILIZE SITE SURFACE TO PREVENT FREE STANDING SURFACE WATER.

02270 EROSION AND SEDIMENT CONTROL

PART 1 GENERAL

1.1 SECTION INCLUDES

A. THE INSTALLATION AND MAINTENANCE OF EROSION AND SEDIMENT CONTROL MEASURES.

B. TEMPORARY AND PERMANENT SEEDING.

1.2 SYSTEM DESCRIPTION

A. ITEMS TO BE PROTECTED FROM SEDIMENT DEPOSITS SHALL INCLUDE DOWN STREAM PROPERTY, WATERWAYS, STREAMS, CATCH BASINS, DITCHES, CULVERTS, AND GUTTERS

B. SUBCONTRACTOR SHALL INSTALL, MAINTAIN, AND REMOVE TEMPORARY EROSION AND SEDIMENT CONTROL MEASURES. REMOVAL REQUIRES THE APPROVAL OF THE FERMCO CONSTRUCTION MANAGER.

PART 2 MATERIAL

2.1 THE SEED MIXTURE INDICATED BELOW, BY WEIGHT, SHALL BE APPLIED AT 3 POUNDS PER 1000 SQUARE FEET, SOWN DRY OR HYDRAULICALLY.

40 PERCENT KENTUCKY BLUEGRASS (POA PRATENSIS)
40 PERCENT CREEPING RED FESCUE (FESTUCA RUBRA)
20 PERCENT ANNUAL RYEGRASS (LOLIUM MULTIFLORUM)

2.2 COMMERCIAL FERTILIZER SHALL BE 12-12-12 APPLIED AT 20 POUNDS PER 1000 SQUARE FEET.

2.3 AGRICULTURAL LIMING MATERIAL AND APPLICATION SHALL CONFORM TO ODOT ITEM 659.

2.4 POTABLE WATER SHALL BE USED TO CONTROL FUGITIVE DUST.

PART 3 EXECUTION

3.1 PREPARATION

A. PREPARE SUBSOIL TO ELIMINATE UNEVEN AREAS AND LOW SPOTS. MAINTAIN LINES, LEVELS, PROFILES, AND CONTOURS. MAKE CHANGES GRADUAL AND BLEND SLOPES INTO LEVEL AREAS. SCARIFY SUBSOIL TO A DEPTH OF 3 INCHES WHERE TOPSOIL IS TO BE PLACED.

B. REMOVE DEBRIS, WEEDS, ROOTS, AND UNDESIRABLE PLANTS. REMOVE CONTAMINATED SUBSOIL.

3.2 ERECTION/INSTALLATION/APPLICATION

A. PLACE TOPSOIL TO A DEPTH OF 4 INCHES PLUS OR MINUS 1 INCH AND RAKE SMOOTH.

B. APPLY FERTILIZER, SEED, AND MULCH PER ODOT ITEM 659. IF SOIL CONDITIONS NECESSITATE, ADD LIME PER ODOT ITEM 659.

C. SEDIMENT CONTROL

1. INSTALL EROSION AND SEDIMENT CONTROL MEASURES AND SEEDING PER ODOT ITEMS 207 AND 659.

2. PERIMETER SEDIMENT CONTROL MEASURES ARE TO BE INSTALLED PRIOR TO ANY CLEARING OR EARTHWORK.

3. THROUGHOUT THE PROJECT, OTHER SEDIMENT CONTROL MEASURES, SUCH AS STRAW BALES AROUND CATCH BASINS, DITCH CHECK, TEMPORARY SEEDING, ETC., ARE TO BE INSTALLED WHEN REQUIRED.

02720 SITE DRAINAGE AND SLOPE PROTECTION

PART 1 GENERAL

1.1 SITE DRAINAGE SHALL INCLUDE THE PROPOSED STORM DRAINS, THEIR APPURTENANCES, AND THEIR OUTFALL.

1.2 SITE DRAINAGE SHALL INCLUDE THE SEEPAGE INLET PIPE AT THE PUMP STATION MANHOLES.

1.3 SLOPE PROTECTION SHALL INCLUDE FILTER FRABIC AND SLOPE PROTECTION MATERIALS.

PART 2 MATERIAL

2.1 STORM DRAIN PIPE AND BENDS TO BE HDPE, CORRUGATED EXTERIOR, SMOOTH INTERIOR, SIMILAR TO ADVANCED DRAINAGE SYSTEMS (ADS) TYPE N-12.

2.2 SEEPAGE INLET PIPE SHALL BE HDPE SIMILAR TO ADS TYPE N-12.

2.3 FILTER FABRIC TO BE SIMILAR TO TREVIRA SPUNBOND TYPE 1125.

2.4 SLOPE PROTECTION MATERIAL SHALL BE AS SHOWN ON THE DRAWINGS.

2.5 JOINT FOR PIPES GREATER THAN 12 INCHES DIAMETER SHALL CONSIST OF CORRUGATED POLYETHYLENE SPLIT COUPLINGS WITH CLOSED CELL NEOPRENE STRIPS THAT COMPLY WITH ASTM D1056. ALL PIPE FITTINGS SHALL MEET AASHTO M 294 STANDARDS.

2.6 JOINTS FOR PIPES LESS THAN 12 INCHES DIAMETER SHALL BE MADE WITH ADS N-12 PVC GASKETED SEWER GRADE FITTINGS.

PART 3 EXECUTION

3.1 PREPARATION

A. HAND TRIM EXCAVATIONS AND REMOVE LOOSE MATERIAL. CORRECT OVEREXCAVATION.

3.2 ERECTION/INSTALLATION/APPLICATION

A. INSTALL PIPE IN ACCORDANCE WITH MANUFACTURER'S RECOMMENDATIONS. CONNECT PIPE WITH SPECIFIED MATERIALS.

B. PIPES ARE TO BE CUT SQUARELY AND CLEANLY SO AS NOT TO ADVERSELY AFFECT JOINING. PIPE END SHALL BE FLUSH WITH THE INTERIOR FACE OF THE CATCH BASIN.

C. ALL COMPACTED BACKFILL SHALL BE INORGANIC MATERIAL, FREE OF ROCK OR GRAVEL OVER 3 INCHES AND FREE OF OTHER UNSUITABLE MATERIAL. BACKFILL COMPACTION TO BE 95 PERCENT STANDARD PROCTOR.

D. STONE FOR SLOPE AND CHANNEL PROTECTION SHALL BE INSTALLED IN ACCORDANCE WITH ODOT ITEM 601.

02730 SEEPAGE SYSTEM

PART 1 GENERAL

1.1 SEEPAGE SYSTEM INCLUDES THE MANHOLE FOR THE PUMP STATION, CLEANOUT AND METER MANHOLES, AND THE EFFLUENT PIPE TO THE AWWT.

1.2 THE PUMPS, CONTROLS, AND PIPING INSIDE THE PUMP STATIONS SHALL BE AS SHOWN ON DRAWING 92X-5900-G-00134.

PART 2 MATERIALS

2.1 EFFLUENT PIPE SHALL BE DUAL CONTAINMENT HDPE, DRISCOPIPE 1000 SERIES, AS MANUFACTURED BY PHILLIPS DRISCOPIPE, INC., NO SPACERS FOR BELOW GRADE PIPING. INLET AND OUTFALL PIPE SHALL BE HDPE DRISCOPIPE 1000 SERIES PIPE.

2.2 PUMP STATION, CLEANOUT MANHOLE, AND METER MANHOLE RISERS SHALL BE HDPE PERMACORE PIPE AS MANUFACTURED BY PHILLIPS DRISCOPIPE, INC. WALL THICKNESS AND SDR SHALL BE AS SHOWN ON THE DRAWINGS.

2.3 STEEL PLATE AND SHAPES SHALL BE ASTM A36 WITH ONE COAT TNEMEC SERIES 4 VERSARE PRIMER AND ONE COAT TNEMEC SERIES 6 TNEME-CRYL TOPCOAT.

2.4 OTHER MATERIALS ARE AS NOTED ON THE PLANS AND DETAILS.

PART 3 EXECUTION

3.1 PREPARATION

A. THE SUBCONTRACTOR SHALL BE RESPONSIBLE FOR LAYOUT.

B. EXISTING UTILITIES SHALL BE LOCATED AND PROTECTED PRIOR TO ANY EXCAVATION.

C. HAND TRIM EXCAVATIONS AND REMOVE LOOSE MATERIAL.

3.2 ERECTION/INSTALLATION/APPLICATION

A. JOINTS FOR HDPE MATERIAL SHALL BE FUSION WELDED.

B. CARRIER PIPE TO BE HYDROSTATICALLY TESTED AT 130 PSI UNLESS OTHERWISE NOTED. MAINTAIN PRESSURE FOR TWO HOURS. NO LEAKAGE ALLOWED.

C. INSTALL PIPE AND MANHOLES IN ACCORDANCE WITH THE MANUFACTURER'S RECOMMENDATIONS. USE ODOT ITEM 703.06, SAND, FOR BEDDING WHEN NATIVE SUBSOIL OF TRENCH BOTTOM IS UNSUITABLE OR FOR OVER EXCAVATION BACKFILL.

D. INSTALL WARNING BURIED EFFLUENT LINE SIGNS EVERY 250 FEET AND AT THE BEGINNING, MIDPOINT, AND END OF CURVES, BETWEEN CLEANOUT MANHOLES.

E. COMPACT BACKFILL AS SPECIFIED IN SECTION 02200, EARTHWORK.

F. MAINTAIN A 10-FOOT SEPARATION BETWEEN EXISTING POTABLE WATER LINE AND THE EFFLUENT LINE.

NOTES

1. FOR DRAWING INDEX, SEE DRAWING 92X-5900-X-00140.
2. ALL DRAWINGS CONTAIN ADDITIONAL SPECIFICATIONS AND INFORMATION.

E 7412

REF DWG NO.	DRAWING TITLE
92X-5900-X-00140	DRAWING INDEX
92X-5900-G-00134	SITE DETAILS - PUMP STATIONS

000113

REV. NO.	ISSUE OR REVISION PURPOSE - DESCRIPTION	A-E	FERMCO	DATE
0	CERTIFIED FOR CONSTRUCTION			

INITIALS AND DATE

UNITED STATES
DEPARTMENT OF ENERGY
FERNALD ENVIRONMENTAL MANAGEMENT PROJECT

THIS DRAWING PREPARED BY
PARSONS
THE RALPH M. PARSONS CO. - PARSONS MAIN, INC. - ENGINEERING-SCIENCE, INC.
CINCINNATI, OHIO

PROJECT NAME
SEEPAGE COLLECTION & REMOVAL OF SEDIMENT
REMOVAL ACTION NO. 30

DRAWING TITLE
CIVIL
SPECIFICATIONS

DRAWN BY	DATE	LEAD ENGINEER	DATE	CHECKED BY	DATE
K. GERARD	03-17-95			E. KUBRIN	03/28/95

PLANT/BLDG. NO.	FLOOR	SCALE	CLASS
		NONE	

SUBMITTED FOR APPROVAL: A-E DATE
FERMCO CRU APPROVAL: DATE

PREPARED UNDER FERMCO PROJECT ORDER NUMBER	USE PROJECT NO.	FEMP PROJECT NO.	DRAWING INDEX CODE NO.	SHEET NO.	REV. NO.
CRU2/P0139		WBS 1.1.1.1.2.2.6 00-90701	92X-5900-G-00173	G0009	0

R92p00145.m(796.ws412) po139@ws412. Mon Jul 31 15:55:26 CDT 1995

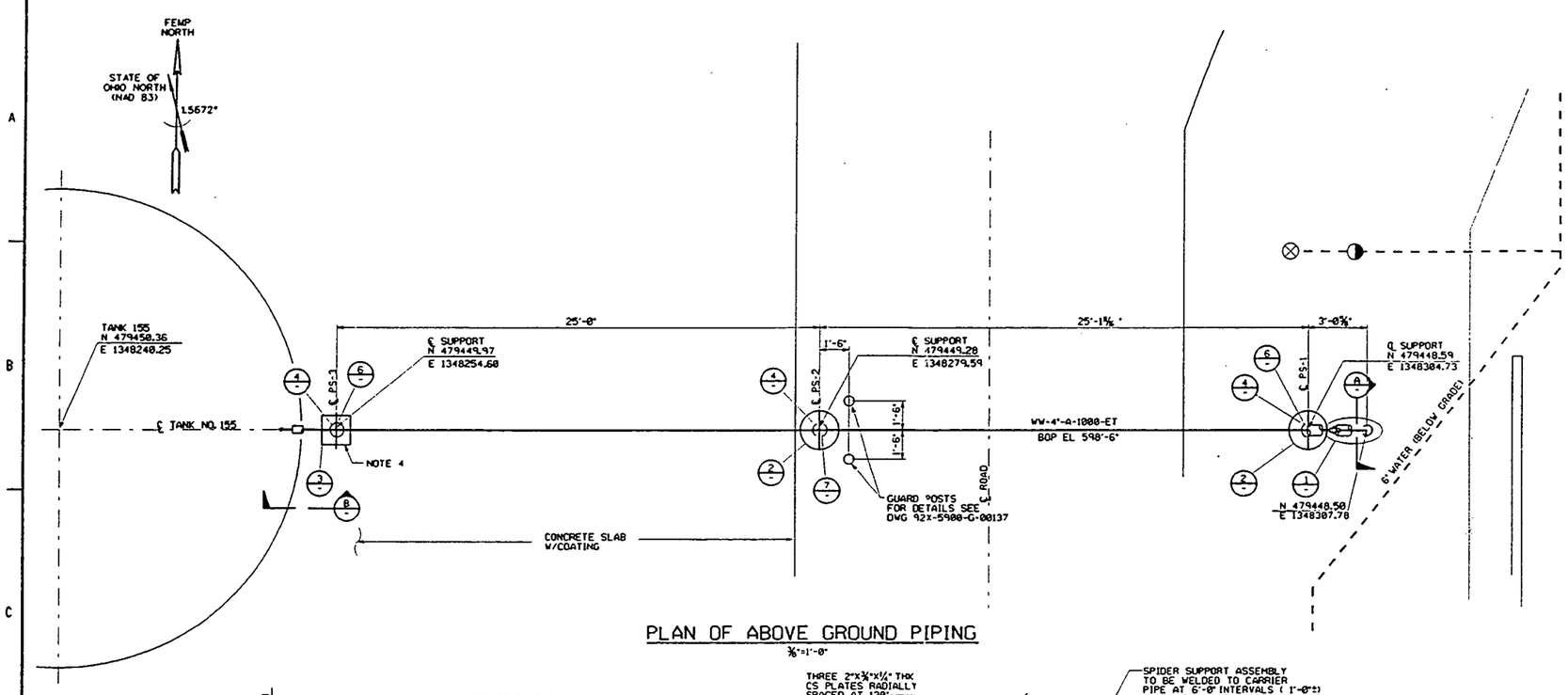

PLAN OF ABOVE GROUND PIPING
⅜"=1'-0"

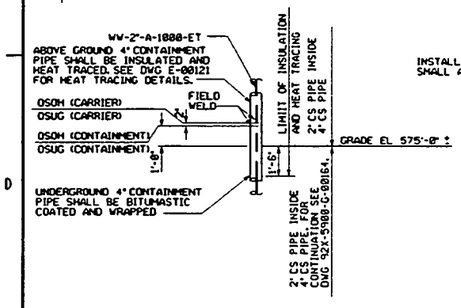

SECTION A
⅜"=1'-0"

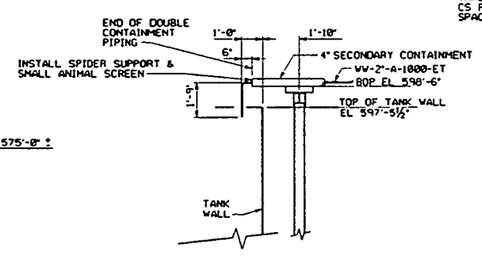

SECTION B
⅜"=1'-0"

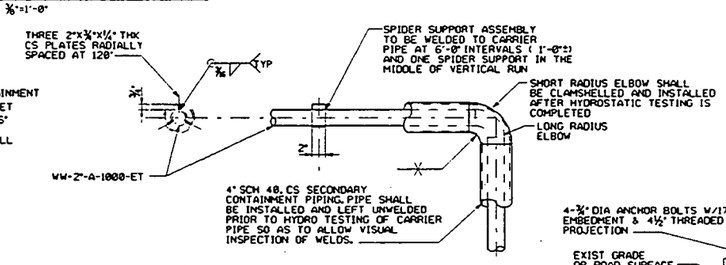

DETAIL 1
NTS

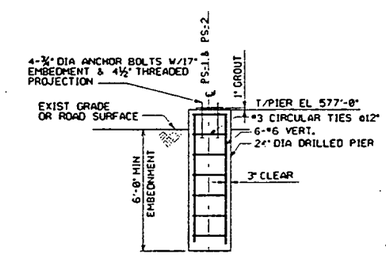

DETAIL 2
NTS

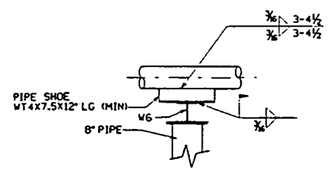

DETAIL 7
NTS
@ PS-2

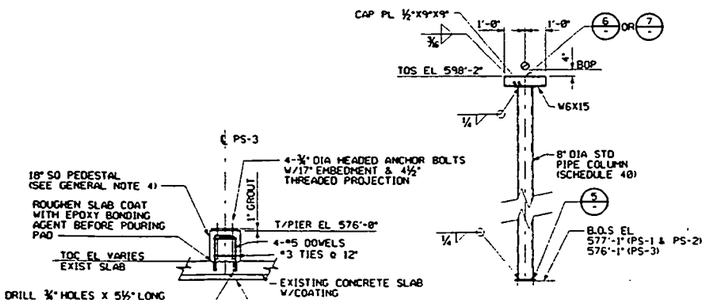

DETAIL 4
LOOKING WEST
NTS

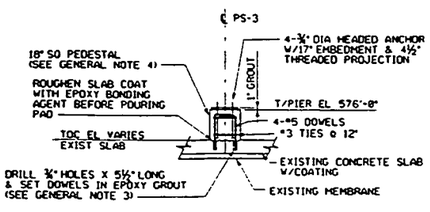

DETAIL 3
NTS

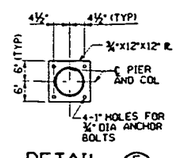

DETAIL 5
NTS

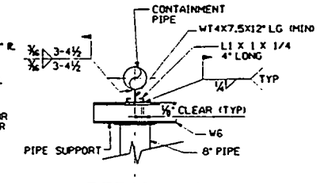

DETAIL 6
NTS
@ PS-1 AND PS-3

NOTES

7412

GENERAL NOTES

1. FOR DRAWING INDEX SEE DRAWING 92X-5900-X-00140.
2. FOR PROCESS AND INSTRUMENT FLOW DIAGRAM SEE DRAWING 92X-5900-N-00143.
3. DOWEL BARS SHALL BE SET WITH CERAMIC 6 EPOXY GROUT BY RAMSET, MIXED AND PLACED IN ACCORDANCE WITH MANUFACTURER'S INSTRUCTIONS.
4. AFTER INSTALLATION OF CONCRETE PEDESTAL, COATING TO BE REPAIRED BY FERMCO.

PIPING SPECIFICATION NOTES

5. MATERIALS, CODE A:
   CARRIER AND CONTAINMENT PIPE SHALL BE SEAMLESS, CARBON STEEL ASTM A-53, GRADE A SCHEDULE 40, BEVELED ENDS.
   FITTINGS SHALL BE SEAMLESS CARBON STEEL BUTTWELD, ASTM A234, GRADE WPB. ELBOWS SHALL BE SHORT RADIUS.
6. FABRICATION:
   ALL WELDING ELECTRODES SHALL BE IN ACCORDANCE WITH AWS A5.1.
   CONTAINMENT PIPING SHALL BE INSTALLED AND LEFT UNWELDED UNTIL HYDROSTATIC TESTING OF THE CARRIER PIPE IS COMPLETE. PIPE SPOOLS SHALL BE ARRANGED TO INSURE VISUAL ACCESS TO CARRIER PIPE WELDS.
7. TESTING:
   CARRIER PIPE SHALL BE HYDROSTATICALLY TESTED TO 130 PSIG. THE TEST PRESSURE SHALL BE MAINTAINED FOR A MINIMUM OF TEN MINUTES PRIOR TO VISUAL INSPECTION.
   CONTAINMENT PIPING SHALL BE PNEUMATICALLY TESTED AT 15 PSI FOR A SOAP BUBBLE LEAK TEST.
8. INSULATION:
   CONTAINMENT PIPING SHALL BE INSULATED WITH 1½" OF PRE-FORMED FIBERGLASS BLOCK AND BOARD INSULATION CONFORMING TO ASTM C547/C612. INSULATED PIPE SHALL BE JACKETED WITH CORRUGATED ALUMINUM ALLOY 3003-H18, CONFORMING TO ASTM B209.

GENERAL STEEL NOTES

9. DESIGN, FABRICATION, AND ERECTION OF STRUCTURAL STEEL SHALL BE IN ACCORDANCE WITH AISC MANUAL OF STEEL CONSTRUCTION, NINTH EDITION.
10. MATERIAL SHALL MEET THE REQUIREMENTS OF THE FOLLOWING SPECIFICATIONS:
    STRUCTURAL STEEL - ASTM A36
    STRUCTURAL PIPE - ASTM A53, GRADE B
    ANCHOR BOLTS - ASTM A36 WITH HEAVY HEX NUTS AND WASHERS.
    WELDING - AWS D1.1 CLASS E70XX (ELECTRODES)
    VISUALLY INSPECT ALL WELDS
    NON-DESTRUCTIVE TEST 50% OF WELDS
11. SHOP AND FIELD PAINTING SPECIFICATION:
    A) PREPARE SURFACES IN ACCORDANCE WITH STEEL STRUCTURES PAINTING COUNCIL (SSPC) SP-6.
    B) PRIME ALL BARE METAL NOT IN CONTACT WITH CONCRETE/GROUT WITH ZINC-RICH, LEAD FREE PRIMER. APPLY TWO-COATS OF EXTERIOR LATEX GLOSS ENAMEL FOR THE FINISH COAT. FOLLOW SSPC PAINT 13 AND PAINT 20.

GENERAL CONCRETE NOTES

12. DESIGN, MATERIAL AND WORKMANSHIP SHALL BE IN ACCORDANCE WITH ACI 318-89.
13. CONCRETE SHALL HAVE A MINIMUM COMPRESSIVE STRENGTH OF 3000 PSI AT 28 DAYS.
14. REINFORCING STEEL SHALL CONFORM TO ASTM A615, GRADE 60.
15. FOUNDATION DESIGN IS BASED ON ASSUMED NET SOIL BEARING PRESSURE ALLOWABLE OF 2000 PSF. IF ANY SOFT, WET, ORGANIC, OR LOOSE SOIL OR ANY OLD FILL IS ENCOUNTERED, THE FERMCO CONSTRUCTION CONTRACTS MANAGER SHALL BE INFORMED AND THE CONDITIONS RESOLVED BEFORE CONTINUATION OF THE PROJECT.

REF DWG NO.	DRAWING TITLE
92X-5900-X-00140	DRAWING INDEX
92X-5900-N-00143	PIPING AND INSTRUMENT DIAGRAM
92X-5900-G-00164	CIVIL SITE PIPELINE PLAN
92X-5900-E-00121	ELECTRICAL PLANS
92X-5900-G-00137	CIVIL SITE DETAILS, GENERAL

000114

REV. NO.	ISSUE OR REVISION PURPOSE - DESCRIPTION	A-E	FERMCO	DATE
0	CERTIFIED FOR CONSTRUCTION			

UNITED STATES
DEPARTMENT OF ENERGY
FERNALD ENVIRONMENTAL MANAGEMENT PROJECT

THIS DRAWING PREPARED BY
PARSONS
THE RALPH M. PARSONS CO. - PARSONS MAIN, INC. - ENGINEERING-SCIENCE, INC.
CINCINNATI, OHIO

PROJECT NAME
SEEPAGE COLLECTION & REMOVAL OF SEDIMENT
REMOVAL ACTION NO. 30

DRAWING TITLE
PIPING /PLANT DESIGN
PIPE SUPPORTS-PLAN AND DETAILS
SOUTH FIELD/FLYASH SEEPAGE COLLECTION SYSTEM

DRAWN BY	DATE	LEAD ENGINEER	DATE	CHECKED BY	DATE
K.MEISNER	03-09-95			R. PERDON	3-21-95

PLANT/BLDG. NO.	FLOOR	SCALE	CLASS
		AS NOTED	

SUBMITTED FOR APPROVAL | FERMCO CRU APPROVAL | A-E DATE | DATE

PREPARED UNDER FERMCO PROJECT ORDER NUMBER	DOE PROJECT NO.	FTMP PROJECT NO.	DRAWING SIZE/ CODE NO.	SHEET NO.	REV. NO.
CRU2/P0139		WBS 1.1.1.1.2.2 00-90701	92X-5900-P-00145	P0001	0

R92e00120.m(253.ws323) po139@ws323. Tue Jul 25 09:19:43 CDT 1995

7412

STATE OF OHIO NORTH (NAD 83)

FEMP NORTH ∠=1.5672°

POWER POLE COORDINATES (NAD83)

POLE NO.	NORTH	EAST	POLE NO.	NORTH	EAST
* 1	478,142.00	1,347,382.00	* 16	478,103.00	1,348,442.00
2	478,294.00	1,347,387.00	17	478,203.00	1,348,480.00
* 3	478,380.00	1,347,477.00	18	478,320.00	1,348,526.00
4	478,298.00	1,347,567.00	19	478,441.00	1,348,573.00
5	478,240.00	1,347,679.00	20	478,555.00	1,348,618.00
6	478,198.00	1,347,794.00	21	478,681.00	1,348,653.00
7	478,153.00	1,347,922.00	22	478,797.00	1,348,708.00
8	478,109.00	1,348,053.00	* 23	478,876.00	1,348,809.00
9	478,098.00	1,348,186.00	24	478,935.00	1,348,902.00
10	478,098.00	1,348,322.00	* 25	FIELD DETERMINED	FIELD DETERMINED
* 11	477,518.00	1,348,384.00			
12	477,574.00	1,348,336.00			
13	477,692.00	1,348,377.00			
14	477,831.00	1,348,426.00			
* 15	477,970.00	1,348,474.00			

* INDICATES POLE GUY WIRE SUPPORT REQUIRED

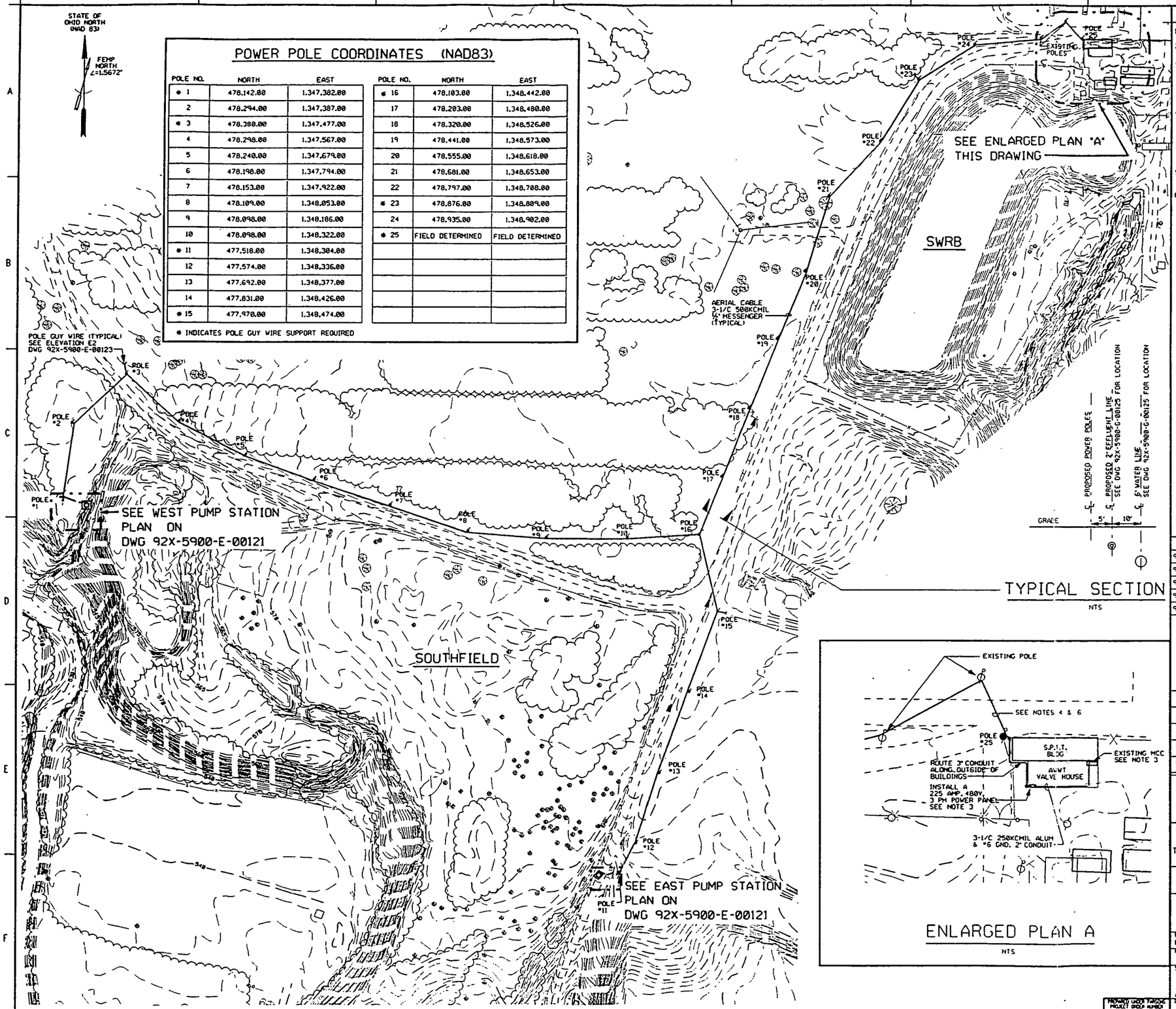

ENLARGED PLAN A

NTS

NOTES

1. SEE DRAWING 92X-5900-X-00140 FOR DRAWING INDEX.
2. SEE DRAWING 92X-5900-E-00124 FOR ELECTRICAL INSTALLATION NOTES AND EQUIPMENT DESCRIPTIONS / SPECIFICATIONS.
3. PROVIDE AND INSTALL A 225 AMP CIRCUIT BREAKER IN THE EXISTING SIEMENS MCC (PART NO. 9-001-00740-30) IN THE AWWT VALVE HOUSE. PROVIDE AND INSTALL A 225 AMP, 3 PHASE POWER PANEL NEAR SOUTHWEST CORNER OF THE VALVE HOUSE WITH A 150 AMP BRANCH CIRCUIT BREAKER TO FEED THE OVERHEAD POWER FEEDER.
4. INSTALL A 3-1/C 500KCMIL ALUMINUM AERIAL CABLE AS SHOWN USING 45 FOOT, CLASS 2 POLES SPACED AT 125' (MIN TO 150' MAX). INSTALL 12' AIR TERMINAL AND BUTT GROUND ON EACH POLE USING #4 SOLID COPPER BARE WIRE. SUBCONTRACTOR TO ADD GUY SUPPORTS TO POLES AS NECESSARY WITH THE APPROVAL OF FERMCO CONSTRUCTION MANAGER. SEE DRAWING 92X-5900-E-00123, ELEVATION E2 FOR TYPICAL POLE GUYING DETAILS.
5. SEE DRAWING 92X-5900-E-00122 FOR PUMP STATION SCHEMATIC, ELEVATIONS AND DETAILS.
6. 500 KCMIL CABLE SIZE IS REQUIRED FOR VOLTAGE DROP. ADDITIONAL FUTURE LOAD CAPACITY IS APPROXIMATELY 20 KVA, MAXIMUM.

LEGEND

EXISTING POLE

NEW POLE

REF DWG NO.	DRAWING TITLE
92X-5900-X-00140	DRAWING INDEX
92X-5900-E-00121	PLANS EAST & WEST PUMP STATIONS AND AWWT TANK 155
92X-5900-E-00124	INSTALLATION NOTES AND EQUIPMENT DESCRIPTIONS / SPECIFICATIONS
92X-5900-E-00122	SCHEMATIC, ELEVATIONS AND DETAILS
92X-5900-G-00125	MASTER SITE PLAN

000115

REV. NO.	ISSUE OR REVISION PURPOSE - DESCRIPTION	A-E	FERMCO	DATE
0	CERTIFIED FOR CONSTRUCTION			

INITIALS AND DATE

UNITED STATES DEPARTMENT OF ENERGY
FERNALD ENVIRONMENTAL MANAGEMENT PROJECT

THIS DRAWING PREPARED BY
PARSONS
THE RALPH M. PARSONS CO. - PARSONS MAIN, INC. - ENGINEERING-SCIENCE, INC.
CINCINNATI, OHIO

PROJECT NAME
SEEPAGE COLLECTION & REMOVAL OF SEDIMENT
REMOVAL ACTION NO. 38

DRAWING TITLE
ELECTRICAL
PLAN
PROJECT SITE PLAN

DRAWN BY	DATE	LEAD ENGINEER	DATE	CHECKED BY	DATE
R. PROSKI	2/17/95			J.L. COOPER	3/17/95

PLANT/BLDG NO. | FLOOR | SCALE 1" = 60' | CLASS

SUBMITTED FOR APPROVAL | FERMCO CRU APPROVAL

A-E DATE | DATE

PREPARED UNDER PARSONS PROJECT ORDER NUMBER	DOE PROJECT NO.	FEMP PROJECT NO.	DRAWING INDEX CODE NO.	SHEET NO.	REV. NO.
CRU2/P0139		VBS 1.1.1.1.2.2.6 00-90701	92X-5900-E-00120	E0001	0

R92e00121.m(249.ws323) po139@ws323. Tue Jul 25 08:41:26 CDT 1995

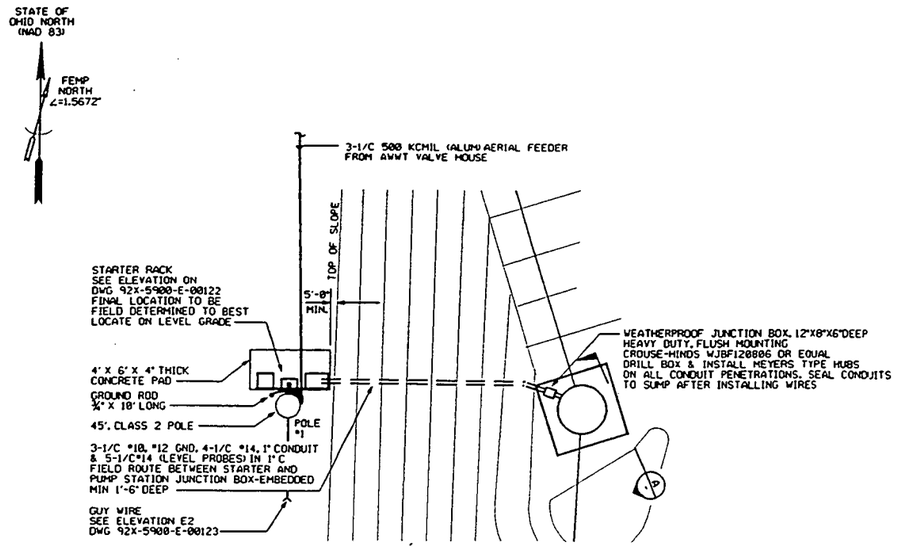

PLAN
WEST PUMP STATION
NTS

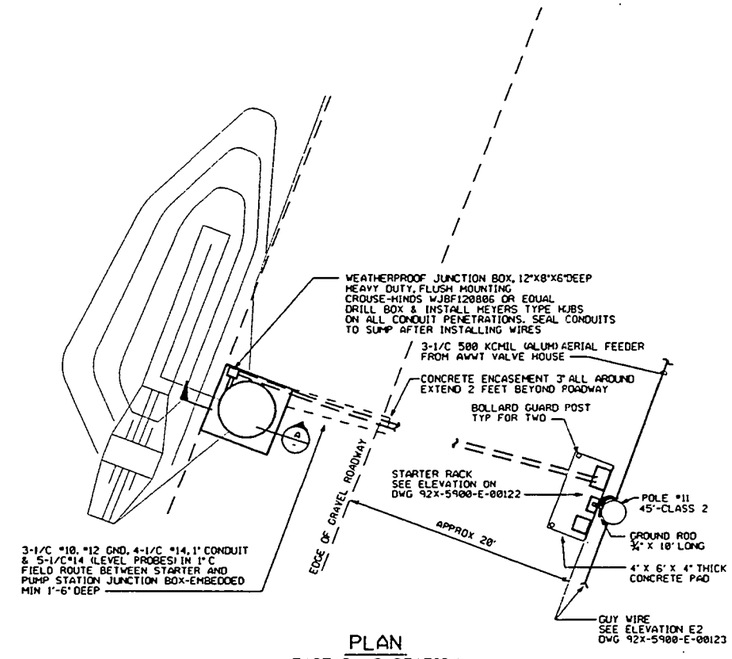

PLAN
EAST PUMP STATION
NTS

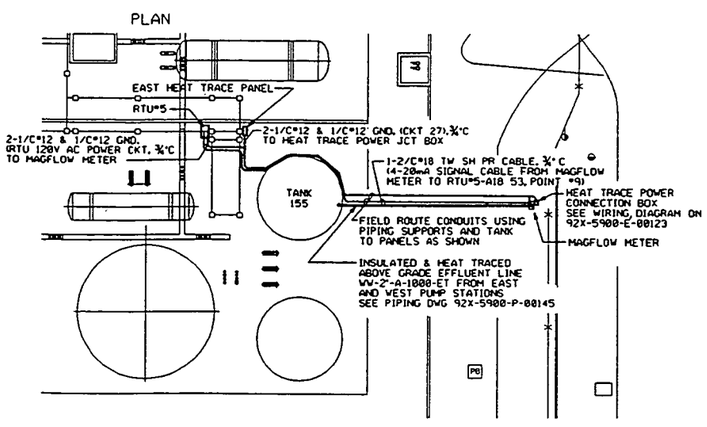

PLAN
ELECTRICAL/INSTRUMENTATION AT AWWT TANK 155
NTS

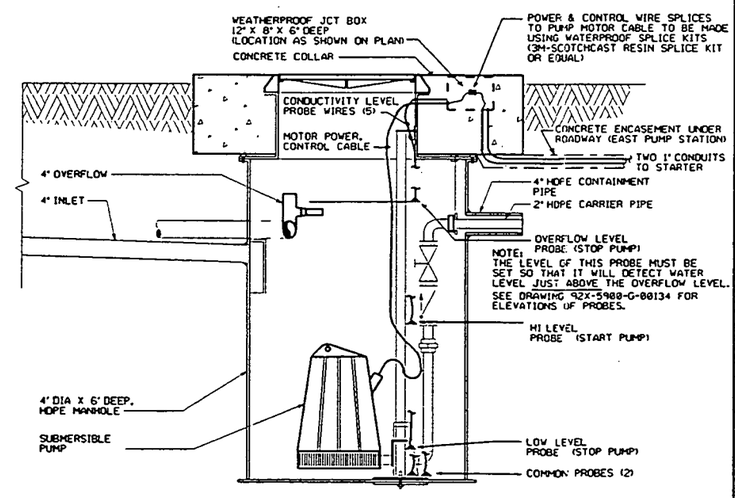

TYPICAL PUMP STATION SECTION (A)
1"=1'-0"

NOTES

1. SEE DRAWING 92X-5900-X-00140 FOR DRAWING INDEX.
2. SEE DRAWING 92X-5900-E-00124 FOR INSTALLATION NOTES AND EQUIPMENT DESCRIPTION SPECIFICATIONS.
3. CONDUITS ARE TO BE FIELD ROUTED.
4. ALL ELECTRICAL DEVICES ARE TO BE NEMA 3 (WEATHERPROOF).
5. ALL ELECTRICAL DEVICES TO BE BONDED TO GROUND ROD INSTALLED AT POWER POLE.

REF DWG NO.	DRAWING TITLE
92X-5900-X-00140	DRAWING INDEX
92X-5900-E-00120	ELECTRICAL PROJECT SITE PLAN
92X-5900-E-00122	SCHEMATIC, ELEVATIONS AND DETAILS
92X-5900-E-00123	ELECTRICAL DETAILS
92X-5900-E-00124	INSTALLATION NOTES AND EQUIPMENT DESCRIPTIONS / SPECIFICATIONS
92X-5900-P-00145	PIPING SECTIONS AND DETAILS
92X-5900-G-00135	GRADING PLAN - EAST PUMP STATION
92X-5900-G-00136	GRADING PLAN - WEST PUMP STATION
92X-5900-G-00134	CICIL - SITE DETAILS - PUMP STATION

000116

REV. NO.	ISSUE OR REVISION PURPOSE - DESCRIPTION	INIT.	FORMAN	DATE
0	CERTIFIED FOR CONSTRUCTION			

UNITED STATES
DEPARTMENT OF ENERGY
FERNALD ENVIRONMENTAL MANAGEMENT PROJECT

THIS DRAWING PREPARED BY
PARSONS
THE RALPH M. PARSONS CO. - PARSONS MAIN, INC. - ENGINEERING-SCIENCE, INC.
CINCINNATI, OHIO

PROJECT NAME
SEEPAGE COLLECTION & REMOVAL OF SEDIMENT
REMOVAL ACTION NO. 38

DRAWING TITLE
ELECTRICAL
PLANS
EAST & WEST PUMP STATIONS AND AWWT TANK 155

DRAWN BY	DATE	LEAD ENGINEER	DATE	DESIGNED BY	DATE
R. PROSKI	2/17/95			J.L. COOPER	2/17/95
PLANT/BLDG. NO.		FLOOR		SCALE NONE	CLASS
SUBMITTED FOR APPROVAL		FERNCO CRU APPROVAL			

DOE PROJECT NO.	FEMP PROJECT NO.	DRAWING SUBJ. CODE NO.	SHEET NO.	REV. NO.
PROJECT UNDER PARSONS PROJECT ORDER NUMBER CRU2/P0139	WBS 1.1.1.1.2.2.6 00-90701	92X-5900-E-00121	E0002	0

R92e00122.m(250.ws323) po139@ws323. Tue Jul 25 08:54:39 CDT 1995

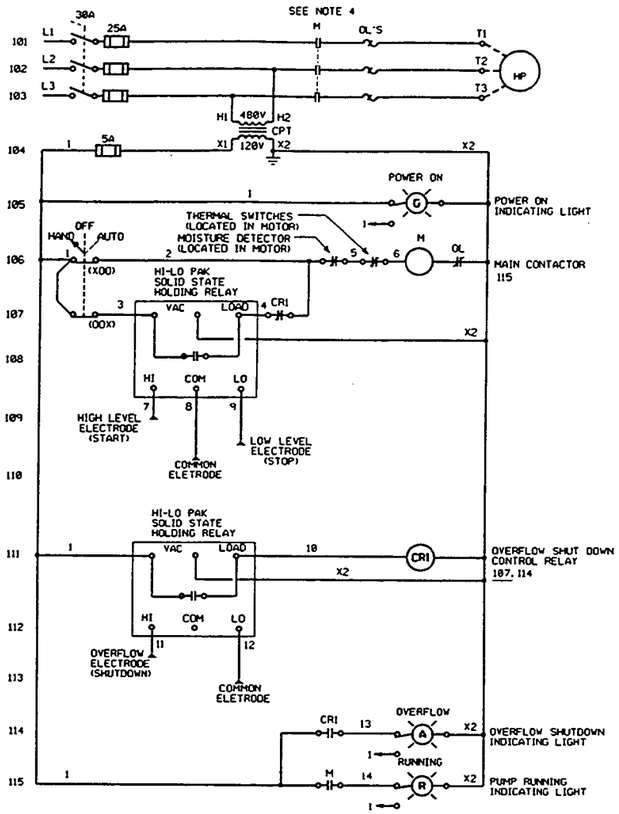

PUMP STATION SCHEMATIC

TYPICAL FOR EAST AND WEST PUMP STATIONS

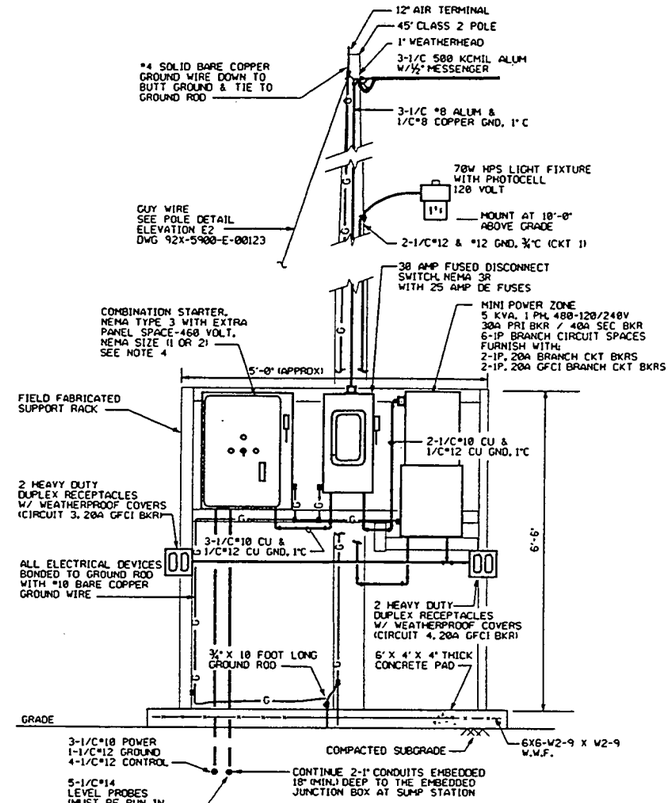

ELEVATION E1 REF E00122 E00120

NTS

EAST PUMP STATION STARTER RACK
WEST PUMP STATION STARTER RACK

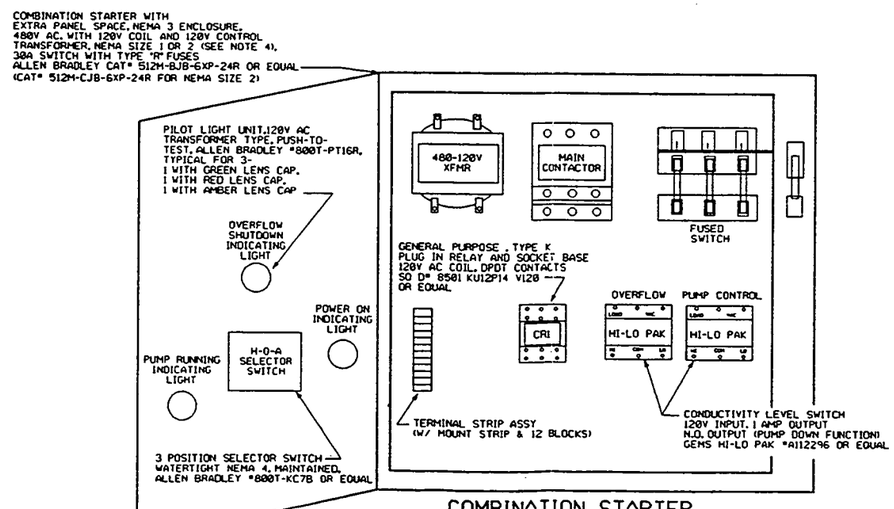

COMBINATION STARTER WITH LEVEL CONTROLS

TYPICAL FOR EAST AND WEST PUMP STATION

NTS

NO. 7412

1. SEE 92X-5900-X-00140 FOR DRAWING INDEX.
2. SEE 92X-5900-E-00120 FOR ELECTRICAL SITE PLAN.
3. SEE 92X-5900-E-00124 FOR ELECTRICAL INSTALLATION NOTES AND EQUIPMENT DESCRIPTIONS / SPECIFICATIONS.
4. FURNISH NEMA SIZE STARTER (1 OR 2) AS REQUIRED IN ACCORDANCE WITH HORSEPOWER RATING OF PUMP MOTOR PURCHASED. PROVIDE, INSTALL AND WIRE CONTROL DEVICES IN EXTRA PANEL SPACE PROVIDED IN STARTER. WIRE PER SCHEMATIC SHOWN ON THIS DRAWING.

REF DWG NO.	DRAWING TITLE
92X-5900-X-00140	DRAWING INDEX
92X-5900-E-00120	ELECTRICAL SITE PLAN
92X-5900-E-00123	ELECTRICAL DETAILS
92X-5900-E-00124	ELECTRICAL INSTALLATION NOTES AND EQUIPMENT DESCRIPTIONS / SPECIFICATIONS

000117

REV. NO.	ISSUE OR REVISION PURPOSE - DESCRIPTION	A-E	FERNCO	SHEET
0	CERTIFIED FOR CONSTRUCTION			

INITIALS AND DATE

UNITED STATES
DEPARTMENT OF ENERGY
FERNALD ENVIRONMENTAL MANAGEMENT PROJECT

THIS DRAWING PREPARED BY
PARSONS
THE RALPH M. PARSONS CO. - PARSONS MAIN, INC. - ENGINEERING-SCIENCE, INC.
CINCINNATI, OHIO

PROJECT NAME
SEEPAGE COLLECTION & REMOVAL OF SEDIMENT
REMOVAL ACTION NO. 30

DRAWING TITLE
ELECTRICAL
SCHEMATIC, ELEVATIONS AND DETAILS
EAST AND WEST PUMP STATIONS

DRAWN BY	DATE	LEAD ENGINEER	DATE	CHECKED BY	DATE
R. PROSKI	2/17/95			J.L. COOPER	3/17/95

PLANT/BLDG. NO. | FLOOR | SCALE: NONE | CLASS

SUBMITTED FOR APPROVAL | FERNCO CRU APPROVAL | A-E | DATE | DATE

PREPARED UNDER PARSONS PROJECT WBS# NUMBER	DOE PROJECT NO.	TEMP PROJECT NO.	DRAWING INDEX CODE NO.	SHEET NO.	REV. NO.
CRU2/P013		WBS 1.1.1.1.2.2.6 00-90701	92X-5900-E-00122	E0003	0

R92e00123.m(251.ws323) po139@ws323. Tue Jul 25 08:57:53 CDT 1995

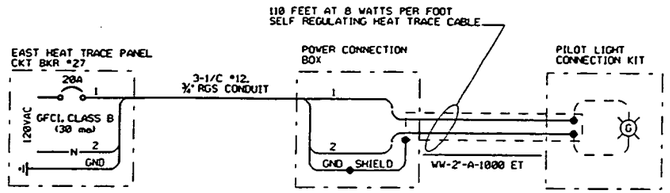

WIRING DIAGRAM FOR HEAT TRACING
ABOVE GRADE PIPE TO TANK 155

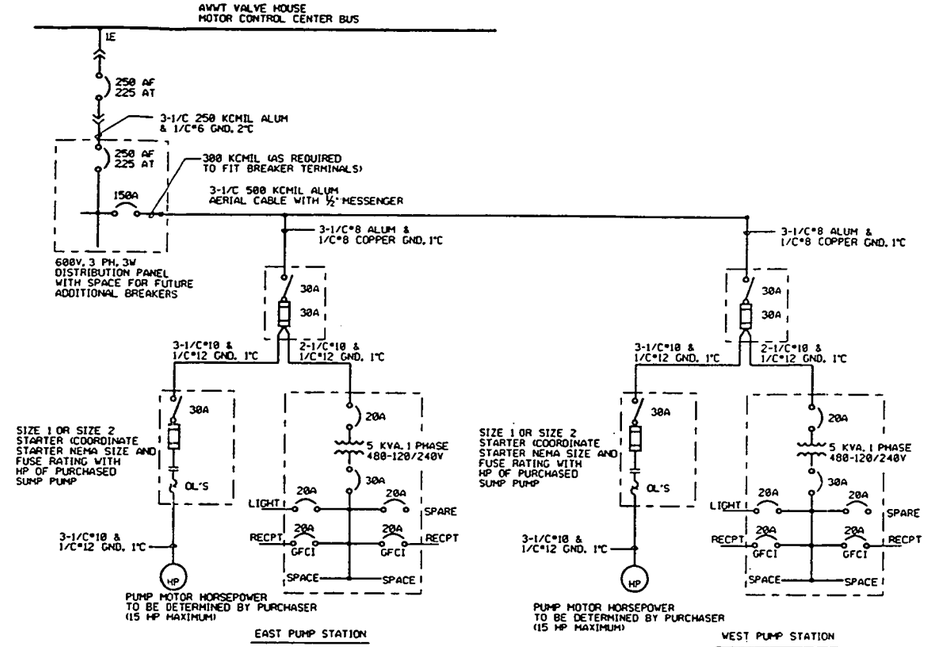

SINGLE LINE DIAGRAM

NOTES

1. SEE 92X-5900-X-00140 FOR DRAWING INDEX.
2. SEE 92X-5900-E-00121 FOR PLAN AT AWWT TANK 155.
3. POWER INSTALLED SOIL ANCHORS TO BE INSTALLED PER MANUFACTURERS INSTRUCTIONS. DEPTH ASSUMED PER SOIL DATA FOR MINIMUM BLOW COUNT 14.
4. PRIOR TO INSTALLATION OF EARTH ANCHORS OR POLES, CONTRACTOR IS TO VERIFY LOCATION OF NEARBY UNDERGROUND UTILITIES AND PUSH SMALL DIAMETER STEEL SOIL PROBE THROUGH AREA TO VERIFY THAT NO UNDERGROUND OBSTRUCTIONS ARE PRESENT.
5. INSTALL SOIL ANCHORS ACCORDING TO MANUFACTURERS INSTRUCTIONS. DEPTH CALCULATION BASED ON SOIL DATA FOR MINIMUM BLOW COUNT OF 7. IF BLOW COUNT IS LESS THAN 7, CONTACT FERMCO CONSTRUCTION MANAGER.

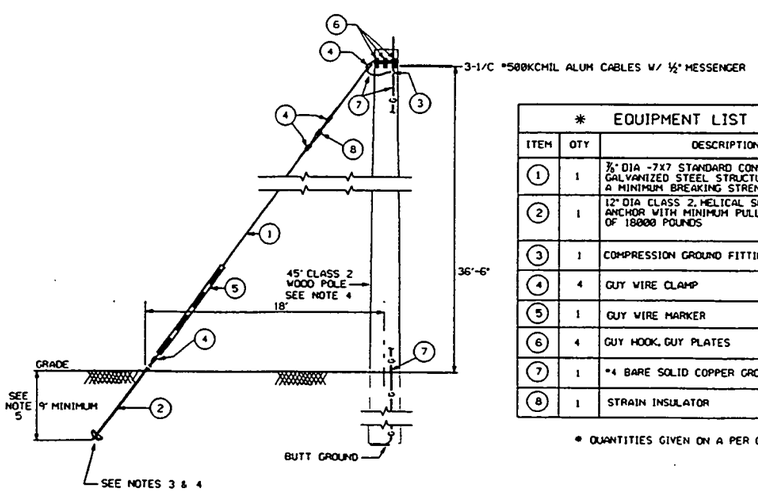

* EQUIPMENT LIST		
ITEM	QTY	DESCRIPTION
1	1	⅜" DIA -7X7 STANDARD CONSTRUCTION GALVANIZED STEEL STRUCTURAL ROPE WITH A MINIMUM BREAKING STRENGTH OF 35 TONS
2	1	12" DIA CLASS 2, HELICAL SCREW TYPE GUY ANCHOR WITH MINIMUM PULLOUT CAPACITY OF 18000 POUNDS
3	1	COMPRESSION GROUND FITTING
4	4	GUY WIRE CLAMP
5	1	GUY WIRE MARKER
6	4	GUY HOOK, GUY PLATES
7	1	#4 BARE SOLID COPPER GROUND WIRE
8	1	STRAIN INSULATOR

* QUANTITIES GIVEN ON A PER GUY ANCHOR BASIS

TYPICAL ELEVATION (E2 / E00123)
NTS

REF
E00120
E00121
E00122

SEE SITE PLAN ON E00120 FOR POLE LINE ROUTING. SUBCONTRACTOR TO INSTALL GUY SUPPORTS WHERE NECESSARY ON NEW AND EXISTING POLES.

REF DWG NO.	DRAWING TITLE
92X-5900-X-00140	DRAWING INDEX
92X-5900-E-00121	PLANS EAST & WEST PUMP STATIONS AND AWWT TANK 155

000118

REV. NO.	ISSUE OR REVISION PURPOSE - DESCRIPTION	A-E	FERMCO	DOE
0	CERTIFIED FOR CONSTRUCTION			

INITIALS AND DATE

UNITED STATES
DEPARTMENT OF ENERGY
FERNALD ENVIRONMENTAL MANAGEMENT PROJECT

THIS DRAWING PREPARED BY
PARSONS
THE RALPH M. PARSONS CO. - PARSONS MAIN, INC. - ENGINEERING-SCIENCE, INC.
CINCINNATI, OHIO

PROJECT NAME
SEEPAGE COLLECTION & REMOVAL OF SEDIMENT
REMOVAL ACTION NO. 30

DRAWING TITLE
ELECTRICAL
ELECTRICAL DETAILS

DRAWN BY	DATE	LEAD ENGINEER	DATE	CHECKED BY	DATE
R. PROSKI	2/17/95			J.L. COOPER	3/17/95

PLANT/BLDG NO.	FLOOR	SCALE	CLASS
		NONE	

SUBMITTED FOR APPROVAL | FERMCO CKU APPROVAL | A-E DATE | DOE DATE

PREPARED UNDER PARSONS PROJECT ORDER NUMBER	DOE PROJECT NO.	FEMP PROJECT NO.	DRAWING INDEX CODE NO.	SHEET NO.	REV. NO.
CRU2/P0139		WBS 1.1.1.1.2.2.6 00-90701	92X-5900-E-00123	E0004	0

R92e00124.m(252.ws323) po139@ws323. Tue Jul 25 09:17:11 CDT 1995

7412

INSTALLATION NOTES

1. ELECTRICAL EQUIPMENT AND INSTALLATION ON THIS PROJECT SHALL BE IN ACCORDANCE WITH GUIDELINES STATED IN DOE 6430.1 SECTION 16.
2. CONDUIT ROUTINGS ARE SHOWN DIAGRAMATICALLY. LOCATE PUMP STATION CONTROL RACK AS BEST SUITED TO PUMP STATION AND FIELD CONDITIONS
3. ALL ELECTRICAL DEVICES TO BE RATED NEMA 3 (WEATHERPROOF) AND GROUNDED IN ACCORDANCE WITH THE NATIONAL ELECTRIC CODE. NFPA 70-1993.
4. DISTRIBUTION PANEL AND DISCONNECT SWITCH TERMINALS TO BE RATED FOR COPPER/ALUMINUM WIRE. ALUMINUM WIRE TO BE TERMINATED IN ACCORDANCE WITH MANUFACTURERS INSTRUCTIONS.
5. ALL WIRING SHALL BE TESTED FOR CONTINUITY. ALL 480 VOLT POWER WIRE INSULATION SHALL BE MEGGER TESTED BETWEEN EACH CONDUCTOR AND GROUND. A 1000-VOLT MEGGER SHALL BE USED FOR INSULATION RATED 600 VOLTS. MINIMUM RESISTANCE SHALL BE 100 MEGOHMS.
   TEST RESULTS SHALL BE RECORDED AND SUBMITTED TO THE FERMCO CONSTRUCTION MANAGER.
6. MOTOR WINDINGS SHALL BE CHECKED FOR CONTINUITY AND MEGGER TESTED PRIOR TO CONNECTION OF POWER LEADS. MOTOR AND PHASE ROTATION SHALL BE CHECKED WITH A PHASE ROTATION TESTER MANUFACTURED BY G. BIDDLE CO. (OR EQUALIO)N EQUIPMENT WHICH COULD BE DAMAGED BY REVERSE ROTATION.

EQUIPMENT DESCRIPTIONS / SPECIFICATIONS

GENERAL

THE LISTING OF EQUIPMENT SUPPLIERS IN NO WAY PRECLUDES THE OFFERER FROM PROPOSING ALTERNATE SUPPLIERS OF ANY OF THE EQUIPMENT TO BE FURNISHED WITHIN THE SCOPE OF THESE SPECIFICATIONS. THE SUPPLIERS LISTED IS INTENDED TO IDENTIFY THE TYPE OF EQUIPMENT USED IN THE DESIGN AND GENERAL QUALITY OF THAT EQUIPMENT. IT IS THE OFFERER'S RESPONSIBILITY TO PROPOSE EQUIPMENT THAT IS BEST SUITED FOR THIS PROJECT IN COMBINED TERMS OF QUALITY AND PRICE.

225 AMP POWER DISTRIBUTION PANEL

600 VOLT, 3 PHASE 3 WIRE SOLID NEUTRAL DISTRIBUTION PANEL SURFACE MOUNTING, TYPE 1 ENCLOSURE, 14K AIC, WITH DOOR, SQUARE D, 1- LINE, CLASS 2110, TYPE HCM WITH 225 AMP MAIN BREAKER, PROVIDE 1-150 AMP, 3 POLE BRANCH CIRCUIT BREAKER.

DISCONNECT SWITCHES

FUSIBLE SWITCH ASSEMBLY IN NEMA 3R ENCLOSURE. HEAVY DUTY, 600 VOLT, 3 POLE, SOLID NEUTRAL, QUICK-MAKE QUICK-BREAK, VISIBLE BLADE, LOAD INTERRUPTER KNIFE SWITCH. DESIGNED TO ACCOMMODATE CLASS R FUSES SQUARE D, CLASS 3110. SIZE AS INDICATED ON DRAWINGS.

STARTERS

NEMA RATED COMBINATION STARTERS WITH EXTRA PANEL SPACE. NEMA TYPE 3 ENCLOSURE, NEMA SIZE 1 OR 2 (COORDINATED WITH HORSEPOWER OF PUMP MOTOR PURCHASED). 480V, 3 PHASE WITH 120 VOLT AC COIL AND 480-120VOLT CONTROL TRANSFORMER. FUSIBLE DISCONNECT TYPE WITH CLASS R FUSE CLIPS. ALLEN BRADLEY BULLETIN 512M

LEVEL CONTROLS

CONDUCTIVITY LEVEL CONTROLS ARE TO BE INSTALLED AND WIRED IN EXTRA SPACE STARTERS AS SHOWN ON DESIGN DRAWINGS. CONDUCTIVITY PROBES ARE TO BE WIRE SUSPENSION ELECTRODE TYPE, BRASS WITH SHIELD. AND TYPE SW SUSPENSION WIRE. B/W CONTROLS TYPE E-IS-SHIELDED..*6013-WS.

COMBINATION TRANSFORMER / DISTRIBUTION PANEL

INDOOR/OUTDOOR PACKAGED POWER SUPPLY, WEATHER RESISTANT ENCLOSURE SINGLE PHASE, 5 KVA, 480-240/120V WITH FULL CAPACITY TAPS 2-5% FCBN, 20A PRIMARY MAIN CIRCUIT BREAKER & 30A SECONDARY MAIN CIRCUIT BREAKER, SPACE FOR 6-1P OR 3 -2P BRANCH CIRCUIT BREAKERS. SQUARE D CAT*MP25540F SUPPLY WITH 2-1P 20AMP AND 2-1P 20AMP GFCI (5mA) BRANCH CIRCUIT BREAKERS

LIGHTING FIXTURES

DUSK-TO-DAWN PACKAGED OUTDOOR LIGHTING FIXTURE, DIE-CAST ALUMINUM WITH 24" ALUMINUM MAST ARM, 120 VOLT AC, 70 WATT HIGH PRESSURE SODIUM LAMP AND BALLAST WITH PHOTOELECTRIC CONTROL
PACKAGED COMPLETE WITH FIXTURE, LAMP, ARM, HOOK-UP WIRE, PHOTOCONTROL AND MOUNTING HARDWARE.

AMERICAN LIGHTING / GRAYBAR CAT*11-570E5-6/PKG B

POWER CIRCUIT BREAKER

225 AMP, 3 POLE, 480 VOLT PLUG IN COMPARTMENT CIRCUIT BREAKER FOR INSTALLATION IN EXISTING SIEMENS MOTOR CONTROL CENTER (PART NO.9-001-80740-30) LOCATED IN THE AWWT VALVE HOUSE.

BASIC ELECTRICAL MATERIALS

WOOD POLES

WOOD POWER POLES SHALL TO BE 45 FOOT LONG, CLASS 2

CONDUIT

CONDUIT SHALL BE RIGID STEEL, HEAVY WALL, GALVANIZED. SIZE AS SHOWN ON DRAWINGS

RECEPTACLES

RECEPTACLES SHALL BE HEAVY DUTY, 125VOLT, 20 AMP 2 POLE, 3 WIRE GROUNDING DUPLEX RECEPTACLES. INSTALL IN CAST CONDUIT BOX WITH WEATHERPROOF LIFT COVERS.

WIRE AND CABLE

SINGLE CONDUCTOR, 600 VOLT INSULATED COPPER OR ALUMINUM CONDUCTOR FOR POWER AND LIGHTING SHALL NOT BE SMALLER THAN *12 AWG. CONDUCTORS FOR CONTROL SHALL BE STRANDED COPPER, NOT SMALLER THAN *14 AWG.
CONDUCTORS SHALL BE COLOR CODED. *6 AWG AND LARGER SHALL BE IDENTIFIED USING COLORED TAPE AT TERMINALS AND SPLICE POINTS. COLOR CODING AS FOLLOWS:

	480Y/277V	120/240V
PHASE A	YELLOW	BLACK
PHASE B	ORANGE	RED
PHASE C	BROWN	
NEUTRAL (GROUNDED)	GRAY	WHITE
GROUND	GREEN	GREEN

HEAT TRACE CABLE

HEATING CABLE SHALL BE SELF-LIMITING, PARALLEL RESISTANCE ELECTRIC TRACING CABLE. 120 VOLT WITH MAXIMUM OUTPUT TEMPERATURE 150 DEGREES F.
POWER TERMINATION KITS, TEE KITS, PILOT LIGHTS AND END SEALS SHALL BE UTILIZED WHERE APPROPRIATE.
MANUFACTURERS....RAYCHEM, CHROMOLOX OR THERMON.
INSTALL PER MANUFACTURERS INSTRUCTIONS

GROUNDING MATERIALS

GROUND ROD ELECTRODE SHALL BE COPPER-CLAD STEEL, ¾INCH DIAMETER, 10 FOOT LENGTH
POLE GROUND WIRE SHALL BE SOLID BARE COPPER WIRE, SIZE AS INDICATED ON DRAWINGS. GROUND CONDUCTORS RUN WITH POWER CABLES SHALL BE GREEN INSULATED CABLES.
SUITABLE GROUND CONNECTORS AS SUPPLIED BY BURNDY, IDEAL, ILSCO OR OTHERS SHALL BE USED FOR MAKING GROUNDING CONNECTIONS.

NOTES

1. SEE 92X-5900-X-00140 FOR DRAWING INDEX.
2. SEE 92X-5900-E-00120 FOR ELECTRICAL SITE PLAN.
3. THE PURPOSE OF THIS DRAWING IS TO CONVEY ELECTRICAL INSTALLATION REQUIREMENTS AND IDENTIFY ELECTRICAL EQUIPMENT IN LIEU OF FORMAL PROJECT SPECIFICATIONS.

REF DWG NO.	DRAWING TITLE
92X-5900-X-00140	DRAWING INDEX
92X-5900-E-00120	ELECTRICAL SITE PLAN

000119

REV. NO.	ISSUE OR REVISION PURPOSE - DESCRIPTION	A-E	FERMCO	SUBT
0	CERTIFIED FOR CONSTRUCTION			

INITIALS AND DATE

UNITED STATES
DEPARTMENT OF ENERGY
FERNALD ENVIRONMENTAL MANAGEMENT PROJECT

THIS DRAWING PREPARED BY
PARSONS
THE RALPH M. PARSONS CO. - PARSONS MAIN, INC. - ENGINEERING-SCIENCE, INC.
CINCINNATI, OHIO

PROJECT NAME
SEEPAGE COLLECTION & REMOVAL OF SEDIMENT
REMOVAL ACTION NO. 30

DRAWING TITLE
ELECTRICAL
INSTALLATION NOTES AND
EQUIPMENT DESCRIPTIONS / SPECIFICATIONS

DRAWN BY	DATE	LEAD ENGINEER	DATE	CHECKED BY	DATE
R. PROSKI	2/17/95			J. L. COOPER	3/28/95

PLANT/BLDG NO.	FLOOR	SCALE	CLASS
		NONE	

SUBMITTED FOR APPROVAL — A-E — DATE
FERMCO CRU APPROVAL — DATE

PREPARED UNDER PARSONS PROJECT ORDER NUMBER	DOE PROJECT NO.	TEMP PROJECT NO.	DRAWING INDEX CODE NO.	SHEET NO.	REV. NO.
CRU2/P0139		VBS 1.1.1.1.2.2.6 00-90701	92X-5900-E-00124	E0005	0

R92n00142.m(6570.ws313) po139@ws313. Tue Jul 25 08:29:33 CDT 1995

7412

PIPING SYMBOLS

- GATE VALVE
- GLOBE VALVE
- BALL VALVE
- PLUG VALVE
- BUTTERFLY VALVE/DAMPER
- STOP CHECK
- NEEDLE VALVE
- CHECK VALVE
- SLIDING GATE VALVE
- BALL CHECK VALVE
- BACKFLOW PREVENTER
- DIAPHRAGM VALVE
- PINCH VALVE
- 3 WAY VALVE
- 3 WAY BALL VALVE
- 3 WAY PLUG VALVE
- ANGLE GATE VALVE
- ANGLE GLOBE VALVE
- FOOT VALVE
- HUB DRAIN OR FUNNEL
- DIAPHRAGM OPERATOR
- DIAPHRAGM W/ POSITIONER
- PISTON OPERATOR
- SAFETY RELIEF VALVE
- SOLENOID OPERATOR
- SELF-CONTAINED BACK PRESSURE REGULATING VALVE
- 2-WAY SOLENOID VALVE
- 3-WAY SOLENOID VALVE (✓ INDICATES DEENERGIZED SECONDARY)
- 4-WAY SOLENOID VALVE
- VALVE WITH OPERATOR (VALVE TYPE UNDEFINED)
- STEAM TRAP
- HOSE QUICK COUPLING
- UNION
- DRAIN LEG
- EXPANSION JOINT
- HANDWHEEL
- EJECTOR
- STRAINER (Y TYPE)
- STRAINER (SINGLE BASKET)
- STRAINER (DOUBLE BASKET)
- STRAINER (CONE TYPE)
- STRAINER (SUCTION TYPE)
- CONCENTRIC REDUCER
- ECCENTRIC REDUCER
- ORIFICE
- VENTURI TUBE
- SIPHON TUBE
- THERMOWELL
- FLOW DIRECTION
- WELDED CONNECTION
- FLANGED CONNECTION
- FLEXIBLE HOSE
- PIPE CAP
- TIE/IN MARK
- PRIMARY
- SECONDARY
- EXISTING PIPING OR EQUIPMENT
- PACKAGED SYSTEM
- MATERIAL CODE BREAK
- INSULATION CODE BREAK
- PULSATION DAMPENER
- AIR FILTER
- FILTER LUBRICATOR REGULATOR
- AIR OPERATED DIAPHRAGM PUMP
- HORIZONTAL CENTRIFUGAL PUMP
- VERTICAL CENTRIFUGAL PUMP
- SUMP PUMP
- CHEMICAL METERING PUMP
- AGITATOR (MIXER)

ABBREVIATIONS

BTU	BRITISH THERMAL UNIT
CU FT	CUBIC FEET
GPH	GALLONS PER HOUR
GPM	GALLONS PER MINUTE
KW	KILOWATT
LB/HR	POUNDS PER HOUR
SCFM	STD. CUBIC FT/MINUTE
NO	NORMALLY OPEN
NC	NORMALLY CLOSED
FO	FAIL OPEN
FC	FAIL CLOSED
AO	AIR TO OPEN
AC	AIR TO CLOSE
IA	INSTRUMENT AIR
ET	ELECTRIC TRACED AND INSULATED
ST	STEAM TRACED AND INSULATED
EF	EXHAUST FAN
GV	GRAVITY VENTILATOR
UH	UNIT HEATER
RED	REDUCER
ECC	ECCENTRIC
TBD	TO BE DETERMINED
TF	TOP FLAT
TYP	TYPICAL
MATL	MATERIAL
MED	MEDIUM
CO	CARBON MONOXIDE
RH	RELATIVE HUMIDITY
CFM	CUBIC FEET/MINUTE
SF	SOUTH FIELD
IFA	INACTIVE FLYASH PILE
CONM	CLEAN OUT MANHOLE
HDPE	HIGH DENSITY POLYETHYLENE
CS	CARBON STEEL

INSTRUMENTATION SPECIAL DESIGNATIONS

DESIGNATION	FUNCTION/ABBREVATION
Σ/N OR AVG	AVERAGING
± OR BI	BIAS
1:1,1:3,2:1 (TYP)	BOOST,GAIN OR ATTENUATE (INPUT/OUTPUT)
△ OR DIF	DIFFERENTIAL
÷ OR DIV	DIVIDE
√ OR SQ.RT.	EXTRACT SQUARE ROOT
X OR MUL	MULTIPLY
N	RAISE TO POWER
REV	REVERSING
Σ OR SUM	SUMMING
L	LOW
LL	LOW LOW
H	HIGH
HH	HIGH HIGH
HL	HIGH LOW
∫	INTEGRATE (TIME INTEGRAL)
%	PROPORTIONAL
Y	UNDETERMINED COMPUTING RELAY
HOA	HAND-OFF-AUTO
⊼	EXISTING INSTRUMENT TO BE RELOCATED
I/P	CURRENT TO PNEUMATIC TRANSDUCER
RUN	RUNNING
OA	OFF-AUTO
OCA	OPEN-CLOSE-AUTO
I/O	INPUT / OUTPUT
⊕	EXISTING INSTRUMENT
UD	UP/DOWN
EW	EAST/WEST
I/I	CURRENT TO CURRENT

PIPING SPECIFICATIONS

FLOWING MEDIUM	MED CODE	MATL CODE
BACK WASH	BW	T
CHILLED WATER	CHS, CHR	A
CHLORINE	CL	B1
CONDENSATE	LC	W, T
CONDENSER WATER	CWS, CWR	A
COOLING WATER	WS, WR	A
DRAIN	DR	A, T
THICKENER OVERFLOW	TO	T
FILTRATE EFFLUENT	FT	A
FLOCCULANT	FL	A
FLUSH WATER	FW	T
FORCE MAIN	FM	M
INSTRUMENT AIR	IA	T
OFF-GAS	OG	T
NITRIC ACID	AN	T1
PERCHED GND WATER	PGW	B
PHOSPHORIC ACID	PAPH	T1
PLANT AIR	PA	W
POLISHED WATER	PW	A
POTABLE WATER	DW	W, B, B3
PROCESS WATER	TW	A
PROCESS WASTEWATER	CE	A
RAW WATER	RW	A
RECYCLE WATER	RC	T, B2
SCRUBBER RECYCLE	RSL	T
SLURRY	SL	T
SODIUM CARBONATE	SC	A
SODIUM HYDROXIDE	NA	T
SODIUM SILICATE	SS	A
STORM WATER	ST	A
SULFURIC ACID	SB	T1
SUMP DISCHARGE	SU	T
VACUUM	V	A
VENTILATION AIR	VE	T
WASTE WATER	WW	W, B4, A **

EXAMPLE:

CE-2"-A-100-E7

- MEDIUM CODE
- NOMINAL PIPE SIZE
- MATERIAL CODE
- LINE NUMBER
- HEAT TRACING AND INSULATION

A - A53,GR. A, SEAMLESS STEEL PIPE
B - PVC
B1 - PVDF
B2 - PVDF, 100 PSI
B3 - CPVC
B4 - HDPE
L - FIBERGLASS REINFORCED PLASTIC
M - DUCTILE IRON
T - 304L, STAINLESS STEEL PIPE
T1 - 316L, STAINLESS STEEL PIPE
W - A53,GR. A, GALVANIZED STEEL PIPE

** SEE NOTE 2

SINGLE LINE AIR DUCT SYMBOLS

- FAN WITH INLET VANES AND BACKDRAFT DAMPER
- BACKDRAFT DAMPER
- MOTORIZED DAMPER
- MANUAL VOLUME DAMPER

INSTRUMENT SYMBOLS

- ELECTRICAL BINARY SIGNAL
- PNEUMATIC BINARY SIGNAL
- ELECTROMAGNETIC OR SONIC SIGNAL (GUIDED)
- ELECTROMAGNETIC OR SONIC SIGNAL (NON-GUIDED)
- IA — INSTRUMENT/PLANT AIR SUPPLY
- ELECTRICAL SIGNAL
- CAPILLARY
- HYDRAULIC SIGNAL LINE
- PNEUMATIC OR VACUUM SIGNAL LINE
- INTERLOCK
- DIAPHRAGM SEAL
- ROTAMETER
- SIGHT GLASS
- LOCAL MOUNTED INSTRUMENT
- FRONT OF PANEL MOUNTED INSTRUMENT
- FRONT OF PANEL MOUNTED INSTRUMENT AUXILLIARY LOCATION
- REAR OF PANEL MOUNTED INSTRUMENT
- REAR OF PANEL MOUNTED INSTRUMENT AUXILLIARY LOCATION
- DIGITAL LOGIC OPERATOR INTERFACE AUXILIARY LOCATION
- DIGITAL LOGIC OPERATOR INTERFACE
- SHARED CONTROL AUXILIARY LOCATION
- SHARED DISPLAY COMPUTER CONTROL AND OPERATOR INTERFACE
- AIR VENT FILTER
- MAGNETIC FLOW METER
- POSITIVE DISPLACEMENT FLOW METER
- EQUIPMENT NUMBER

FY-102A
- LETTERS OF IDENTIFICATION
- SPECIAL DESIGNATION
- INSTRUMENT TAG NUMBER

TYPICAL CALL OUT

LETTERS OF INSTRUMENT IDENTIFICATION

LETTER	FIRST LETTER: MEASURED OR INITIATING VARIABLE	2ND LETTER: MODIFIER	3RD OR 4TH LETTER: READ OUT OR PASSIVE FUNCTION
A	ANALYSIS	ALARM	ALARM
B	BURNER FLAME	----	----
C	CAMERA	CONTROLLER	CONTROLLER
D	DENSITY	DIFFERENTIAL	----
E	VOLTAGE	ELEMENT	ELEMENT
F	FLOW RATE	RATIO (FRACTION)	----
G	GAGING (DIM)	VIEWING DEVICE	GLASS
H	HAND (MANUAL)	----	HIGH
I	CURRENT (ELECT)	INDICATE	INDICATE
J	POWER	SCAN	----
K	TIME	----	----
L	LEVEL	LIGHT	LOW
M	MOIST OR HUMIDITY	----	----
N	----	----	----
O	OBSERVATION	----	ORIFICE
P	PRESSURE OR VACUUM	----	POINT (TEST)
Q	QUANTITY OR EVENT	TOTALIZER	----
R	RADIOACTIVITY	RECORDER	----
S	SPEED OR FREQUENCY	SAFETY/SWITCH	SWITCH
T	TEMPERATURE	TRANSMITTER	TRANSMITTER
U	USER'S GUIDE	----	MULTIFUNCTION
V	VISCOSITY	----	VENT, VALVE
W	WEIGHT OR FORCE	WELL	----
X	UNCLASSIFIED	----	UNCLASSIFIED
Y	RELAY	RELAY	----
Z	POSITION	----	----

NOTES

1. FOR DRAWING INDEX SEE DRAWING 93X-5900-X-00140.
2. CONTAINMENT PIPE SHALL BE PROVIDED FOR EFFLUENT PIPE EXCEPT PIPE WITHIN THE HDPE MANHOLE. CONTAINMENT PIPE SIZE AND MATERIAL SHALL BE AS FOLLOWS:

	CARRIER PIPE	CONTAINMENT PIPE
A. UNDERGROUND	2" HDPE	4" HDPE
B. ABOVEGROUND	2" CS	4" CS

REF DWG NO.	DRAWING TITLE
92X-5900-X-00140	DRAWING INDEX

000120

REV. NO.	ISSUE OR REVISION PURPOSE - DESCRIPTION	A-E	FENCH	DATE
0	CERTIFIED FOR CONSTRUCTION			

INITIALS AND DATE

UNITED STATES
DEPARTMENT OF ENERGY
FERNALD ENVIRONMENTAL MANAGEMENT PROJECT

THIS DRAWING PREPARED BY
PARSONS
THE RALPH M. PARSONS CO. - PARSONS MAIN, INC. - ENGINEERING-SCIENCE, INC
CINCINNATI, OHIO

PROJECT NAME
SEEPAGE COLLECTION & REMOVAL OF SEDIMENT
REMOVAL ACTION NO. 30

DRAWING TITLE
MECHANICAL PROCESS
PIPING AND INSTRUMENTATION DIAGRAM
SYMBOLS AND LEGEND SHEET

DRAWN BY	DATE	LEAD ENGINEER	DATE	CHECKED BY	DATE
J. LAWSON	03/08/95			S. GHANTOUS	3/28/95

PLANT/BLDG. NO. | FLOOR | SCALE: NONE | CLASS

SUBMITTED FOR APPROVAL | FENCO CRU APPROVAL

A-E DATE | DATE

PREPARED UNDER PARSONS PROJECT ORDER NUMBER	DOE PROJECT NO.	FLOW PROJECT NO.	DRAWING SHEET CODE NO.	SHEET NO.	REV. NO.
CRU2/P0139		V8S L.1.1.1.2.2.6 00-90701	92X-5900-N-00142	N0001	0

R92n00143.m(6571.ws313) po139@ws313. Tue Jul 25 08:34:46 CDT 1995

7412

1. FOR DRAWING INDEX SEE 92X-5900-X-00140.
2. FOR SYMBOLS AND LEGEND SEE 92X-5900-N-00142.
3. FOR PUMP CONTROLS AND INDICATORS SEE DRAWING 92X-5900-E-00122
4. "FOI-999" IS AN EXISTING REMOTE MULTIPLEXING UNIT LOCATED IN AWWT. REFER TO DRAWING 92X-5900-N-00172 FOR SPECIFIC IDENTIFICATION.
5. PUMP SPECIFICATIONS

A. CAPACITY:

	WEST PUMP	EAST PUMP
RATED FLOW, GPM	25	25
RATED TOTAL HEAD, FT.	180	160
MOTOR HP (MAX)	15	15
MAXIMUM RPM	3450	3450

B. CONSTRUCTION:

1) PUMP
HOUSING: CAST IRON
IMPELLER: CAST IRON, OPEN DESIGN FOR SOLIDS HANDLING, MULTIVANE
VOLUTE: CAST IRON, 2" DISCHARGE
SEAL: MECHANICAL TYPE
BEARINGS: BALL TYPE, PERMANENTLY LUBRICATED
SHAFT: STAINLESS STEEL

2) MOTOR
DESIGN: NEMA B
TYPE: ENCLOSED SUBMERSIBLE, AIR FILLED HOUSING
INSULATION CLASS: F
POWER SUPPLY: 460 VOLTS, 3 PHASE, 60 HERTZ
MOTOR PROTECTION: MOISTURE DETECTOR, BI-METALLIC SWITCHES IN EACH PHASE
POWER CABLE: 30 FEET, LEAKPROOF CABLE ENTRY

C. ACCESSORIES: DISCHARGE CONNECTION, GUIDE RAIL, UPPER GUIDE RAIL BRACKET, AND LIFTING CHAIN (SEE DRAWING 92X-5900-G-00134)

D. MANUFACTURER: FLYGT, ABS, OR EQUAL

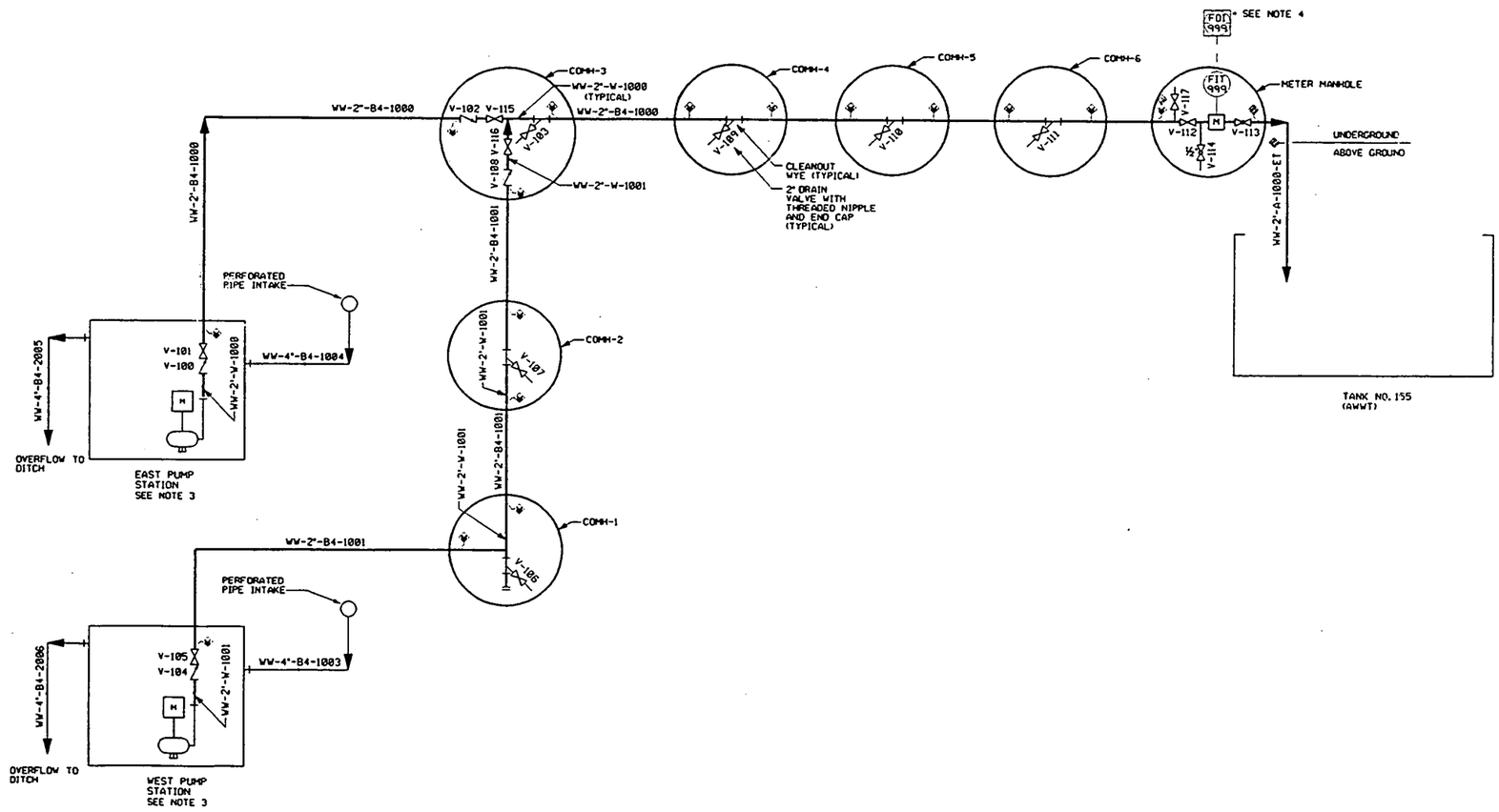

LAST VALVE NUMBER | V-117

REF DWG NO.	DRAWING TITLE
92X-5900-X-00140	DRAWING INDEX
92X-5900-E-00122	SCHEMATIC, ELEVATIONS, AND DETAILS
92X-5900-G-00134	SITE DETAILS
92X-5900-N-00142	SYMBOLS AND LEGEND SHEET
92X-5900-N-00172	FLOW METER LOOP, DETAILS AND MISCELLANEOUS

000121

REV.	ISSUE OR REVISION PURPOSE - DESCRIPTION	A-E	FEMCO	DATE
0	CERTIFIED FOR CONSTRUCTION			

INITIALS AND DATE

UNITED STATES
DEPARTMENT OF ENERGY
FERNALD ENVIRONMENTAL MANAGEMENT PROJECT

THIS DRAWING PREPARED BY
PARSONS
THE RALPH M. PARSONS CO. - PARSONS MAIN, INC. - ENGINEERING-SCIENCE, INC
CINCINNATI, OHIO

PROJECT NAME
SEEPAGE COLLECTION & REMOVAL OF SEDIMENT
REMOVAL ACTION NO. 30

DRAWING TITLE
MECHANICAL PROCESS
PIPING AND INSTRUMENTATION DIAGRAM
SF/IFP SEEPAGE COLLECTION SYS

DRAWN BY	DATE	LEAD ENGINEER	DATE	CHECKED BY	DATE
J. LAWSON	03/08/95			S. GHANTOUS	3/28/95

PLANT/BLDG. NO.	FLOOR	SCALE	CLASS
		NONE	

SUBMITTED FOR APPROVAL | FEMCO CRU APPROVAL

A-E DATE | DATE

PREPARED UNDER PARSONS PROJECT ORDER NUMBER	DOE PROJECT NO.	FDAP PROJECT NO.	DRAWING INDEX CODE NO.	SHEET NO.	REV. NO.
CRU2/P0139		WBS 1.1.1.1.2.2.6 00-90701	92X-5900-N-00143	N0002	0

R92n00172.m(797.ws412) po139@ws412. Mon Jul 31 15:57:20 CDT 1995

7412

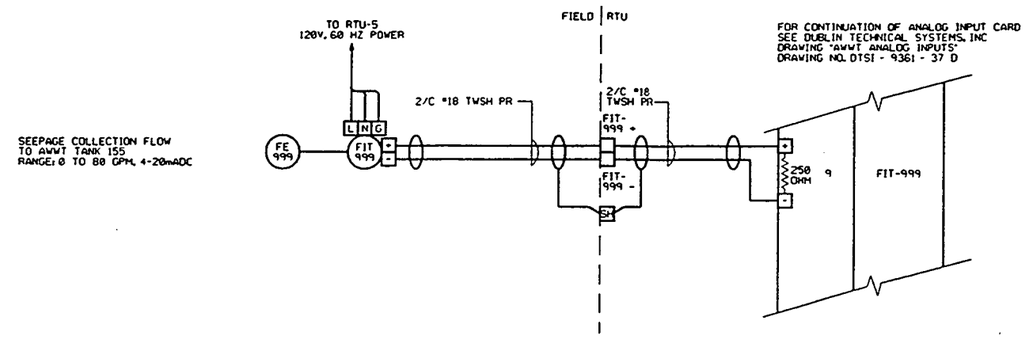

FIT-999 LOOP

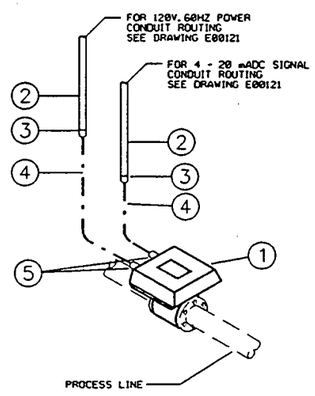

FIT-999
INDICATING FLOWMETER - MAGNETIC
WAFER STYLE

BILL OF MATERIAL

ITEM#	QUANTITY REQUIRED (NOTE 2)	UM	DESCRIPTION	NOTES	VENDOR CAT. NO.
1	1	EA	INDICATING MAGNETIC FLOW METER		FISCHER-PORTER: 10D-1475
2	AS REQ'D	FT	CABLE, ¾" CONDUIT AND FITTINGS		
3	2	EA	¾" NPT TO ½" LIQUID-TIGHT FLEX CONN.		
4	4 NOM.	FT	½" LIQUID-TIGHT FLEX CONDUIT		
5	2	EA	½" NPT TO ½" LIQUID-TIGHT FLEX CONN.		

INDICATING FLOWMETER
MAGNETIC - WAFER STYLE
SPECIFICATIONS

LOOP TAG NO.		FIT-999
SERVICE		SEEPAGE COLLECTION METERING
LINE NO		WW-2"-A-1000-ET
P&ID NO		92X-5900-N-00143
SERVICE CONDITIONS		
FLUID		WASTE WATER
NORMAL FLOW		50 GPM
FLOW	MAX./MIN.	80/20 GPM
TEMPERATURE	MAX./MIN.	90/40°F
PRESSURE	MAX./MIN.	80/15 PSI
VELOCITY	MAX./MIN.	7.7/1.9 FT/SEC
CONDUCTIVITY	NORM./MIN.	>30 MICROMHOS/CC
SPECIFIC GRAVITY	MAX./NORM.	1.1/1.0 GR/CC
% SOLIDS	MAX./NORM.	2/1
MEASURING ELEMENT		
TUBE SIZE, SCHED.		2", SCHED.40
LINER MATERIAL		NOTE 5
END CONNECTIONS/TYPE MATERIAL		WAFER/NA
ELECTRODE MATERIAL		NOTE 6
METER CASING		MFG. STD.
GROUNDING TYPE/MATERIAL		INTERNAL/MFG. STD.
TRANSMITTER		
OUTPUT SIGNAL		4-20 mADC
CALIBRATED FLOW RANGE		0-80 GPM
CONDUIT CONN. SIZE		¾"NPT
MOUNTING		INTEGRAL
ENCLOSURE CLASS		NEMA 4X
POWER REQUIREMENT/ELECT. CODE		120V, 60HZ, GENERAL
INTEGRATOR		YES
ZERO RETURN		YES
ALARMS		NO
SPECIAL MODIFICATION		NO
EXTRA FEATURES OR REQUIREMENTS		NOTE 4

NOTES

1. CONTRACTOR SHALL PROVIDE ALL MISCELLANEOUS HARDWARE INCLUDING FITTINGS NOT IDENTIFIED IN THE BILL OF MATERIAL. IN ORDER TO PROVIDE A COMPLETE ASSEMBLY.
2. QUANTITIES ARE FOR ESTIMATES ONLY. ACTUAL QUANTITIES SHALL BE FIELD DETERMINED.
3. FOR DRAWING INDEX SEE DRAWING 92X-5900-X-00140.
4. FLOW INDICATOR SHALL BE MOUNTED SO THAT IT CAN BE VIEWED FROM THE TOP.
5. ACCEPTABLE MATERIALS OF CONSTRUCTION FOR THE LINER ARE CERAMICS AND TEFZEL.
6. ACCEPTABLE MATERIALS OF CONSTRUCTION FOR THE ELECTRODES ARE 316 SST, ZIRCONIUM AND PLATINUM.

REF DWG NO.	DRAWING TITLE
92X-5900-X-00140	DRAWING INDEX
92X-5900-N-00143	MECHANICAL - PIPING AND INSTR. DIAGRAM
DTSI-9361-37D	DUBLIN TECHNICAL SYSTEMS, INC. AWWT ANALOG INPUTS
92X-5900-E-00121	ELECTRICAL-PLANS, EAST AND WEST PUMP STATIONS AND AWWT TANK 155

000122

REV. NO.	ISSUE OR REVISION PURPOSE - DESCRIPTION	A-E	FERNCO	DATE
0	CERTIFIED FOR CONSTRUCTION			

UNITED STATES
DEPARTMENT OF ENERGY
FERNALD ENVIRONMENTAL MANAGEMENT PROJECT

THIS DRAWING PREPARED BY
PARSONS
THE RALPH M. PARSONS CO. - PARSONS MAIN, INC. - ENGINEERING-SCIENCE, INC.
CINCINNATI, OHIO

PROJECT NAME
SEEPAGE COLLECTION & REMOVAL OF SEDIMENT
REMOVAL ACTION NO. 30

DRAWING TITLE
INSTRUMENTATION
FLOW METER LOOP
AND MISCELLANEOUS DETAILS

DRAWN BY	DATE	LEAD DRAFTER	DATE	CHECKED BY	DATE
C.L.DINHARDT	10-17-95			J. COOPER	3/21/96

PLANT/BLDG NO.	FLOOR	SCALE	CLASS
		NONE	

SUBMITTED FOR APPROVAL: A-E DATE
FERNCO CRU APPROVAL: DATE

PREPARED UNDER PARSONS PROJECT ORDER NUMBER	LOE PROJECT NO.	FEMP PROJECT NO.	DRAWING INDEX CODE NO.	SHEET NO.	REV. NO
CRU2/P0139		VBS 1.1.1.1.2.2.6 00-90701	92X-5900-N-00172	N0003	0

AURORA PUMP
A UNIT OF GENERAL SIGNAL

Dennis R. Wetzel
Faber Pump and Equipment
Cincinnati, OH 45246
513 874-6755 Fx 874-6816

NO. OF PRINTS	
	FOR APPROVAL
5	FINAL O&M

SALES OFFICE: _____ PO # CT95-478

FACTORY ORDER NUMBER: 53794

JOB: RQN # 160647

SERVICE: SEEPAGE PUMPS

ENGINEER: PARSONS

CONTRACTOR: _____ PO # 95CP003859

SOLD TO: FERMCO

REFERENCE: EAST & WEST PUMPS

7412

HYDROMATIC™ SPGH

Installation and Service Manual

SPGH

SUBMERSIBLE
GRINDER PUMP
(HIGH HEAD)

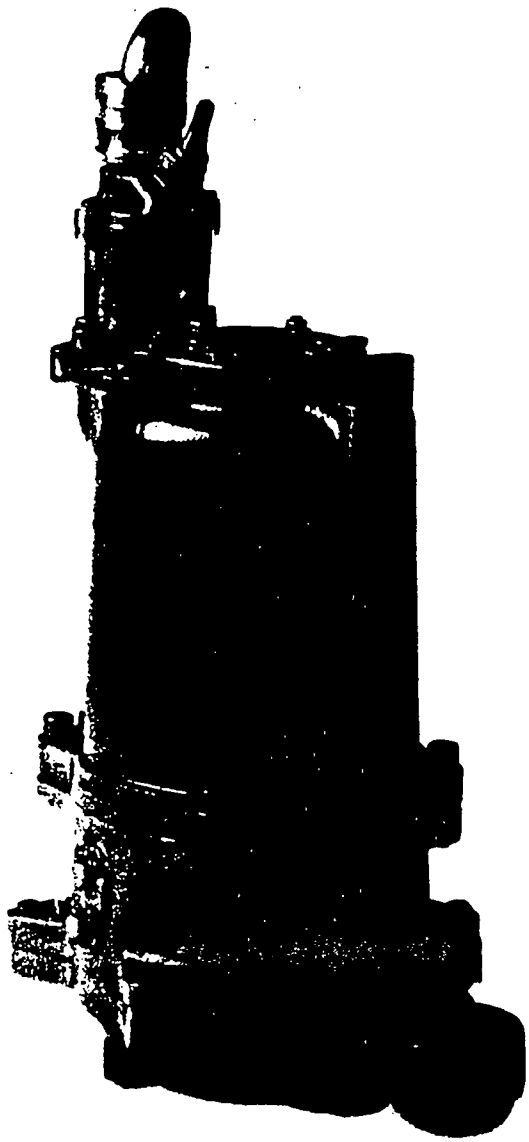

AURORA PUMP GS
A UNIT OF GENERAL SIGNAL

000124

Thank you for purchasing your **Aurora/Hydromatic** Pump. To help insure years of trouble free operation, please read the following manual carefully.

Warning: Before handling these pumps and controls, always disconnect the power first.

Do not smoke or use sparkable electrical devices or flames in a septic (gaseous) or possible septic sump.

Before operation — Read the following instructions carefully. Reasonable care and safe methods should be practiced. Check local codes and requirements before installation.

TABLE OF CONTENTS

	PAGE
GENERAL INFORMATION	3
INSTALLATION INSTRUCTIONS	3
OPERATION	3,4
MAINTENANCE	4-6
TROUBLE CHECK LIST	7
PARTS LIST	8,9

000125

1 GENERAL INFORMATION

PUMP DESCRIPTION

The Hydromatic pumps covered by these instructions are submersible grinder pumps.

The cutter blades are on the suction side of the centrifugal pump impeller and discharge directly into the inlet of the impeller. The integral stainless steel pump-motor shaft is sealed by two mechanical seals with an oil chamber between the seals to provide lubrication for both seal faces.

A radial sleeve bearing, lubricated by the oil in the seal chamber, is located between the seals and takes the radial load from the pump impeller and cutter blades.

The motor winding, rotor, and ball thrust bearing are mounted in a housing sealed and filled with oil to lubricate the bearing and transmit the heat from motor winding to outer shell. The ball thrust bearing is held in a movable cap so that the axial cutter and cutter ring clearance can be adjusted from the outside without the use of shims.

The power cord is sealed into the motor housing with a cord grip, and the individual conductors are sealed into the cord cap with epoxy sealing compound.

APPLICATION

These pumps are designed for either home or industrial sewage discharge applications with a pH ranging from 6 to 9, specific gravities from 0.9 to 1.1, viscosities ranging from 28 to 35 S.S.U., and temperatures up to 140°F.

RECEIVING PUMP

Pump should be checked on arrival for possible concealed damage in shipping. Any damage should be reported immediately to delivering carrier. Claims for damage must originate at the receiving end. Claims for shipping damage cannot be processed at the factory.

CODES

All local wiring codes must be observed. Consult the local inspector before installation to avoid costly delays that can occur due to rejection after job is finished.

2 INSTALLATION INSTRUCTIONS

LOCATION

If pumps are installed in an existing basin or concrete sump, the piping can either be connected permanently or rails and brackets can be furnished for mounting to walls of basin. In either case, be sure that the Hydromatic non-clog check valve is used and that the pumps are submerged in a vertical position. The complete factory built packaged system is recommended for the most satisfactory installation and generally for the lowest cost where expensive installation labor is involved.

ELECTRICAL CONNECTIONS

Make all connections from motor to control panel to comply with local codes.

CAUTION: Be sure ground wire is connected to a good ground such as a water pipe. This is important for safety.

3 OPERATION

STARTING THE PUMP

To start the pump, perform the following steps in order:

1. If pump is 3 phase, the rotation of the impeller must first be checked. Lift pump from sump, lay it down, and quickly turn pump on and then off.

   The impeller should turn counter-clockwise when viewed from the suction. If rotation is wrong, turn off main breaker and interchange any two line leads to motor to correct rotation.

000126

If pump is piped in permanently and inlet cannot be observed, rotation will have to be checked by pump operation described later.

If pump is single phase, no rotation check is necessary.

2. Run water into sump until motor is covered.
3. Open gate valve in discharge line.
4. Turn pump on. If pump runs and sump liquid does not pump down, stop pump and close discharge gate valve. Then lift pump until sealing flange is open to vent off trapped air. Lower pump, open discharge valve, and start the pump again.

   If pump is piped in permanently, it may be necessary to break union at pump discharge to clear air.
5. If pump is 3 phase, piped in permanently, and still does not operate properly after venting, rotation is wrong and can be reversed by interchanging any two line leads.
6. Level controls should be set so that pump turns off when level is about 2 inches above inlet and turns on when level is about 2 inches above motor.

CAUTION: Be sure ground wire is connected to good ground such as a water pipe. This is important for safety.

4 MAINTENANCE

AXIAL CUTTER ADJUSTMENT

To maintain the proper face clearance between the axial cutter (34) and the cutter ring (28), follow this procedure:

1. Close gate valve at pump discharge.
2. Turn off circuit breaker.

CAUTION: Never work on pump unless power has been turned off.

3. Remove pump from sump.
4. Referring to Figure 1, loosen jam nuts (48) on set screws (49) located on top of bearing housing (47 for 3, 5 and 7½ horsepower).
5. Loosen set screws (49).
6. Tighten hex head cap screws (57) until axial cutter (34) just drags on cutter ring (28) when radial cutter (32) is turned by hand.
7. Back off on hex screws (57) ⅛ turn.
8. Tighten set screws (49) to lift axial cutter (34) for proper face clearance.
9. Tighten jam nuts (48) on set screws (49).
10. Again turn radial cutter (32) by hand to determine if shaft has any drag.
11. If there is still some drag, repeat above steps and back off hex screws (57) further.

IMPORTANT: Be sure that both hex screws (57) are tightened or loosened the same amount and that the set screws (49) are tight against the motor housing (8). Also, remember that the set screws (49) increase the clearance while the hex screws (57) decrease the clearance.

REPLACING GRINDER PARTS

If necessary to replace grinder parts because of wear or to inspect for clogging, refer to page 8.

1. Close gate valve at pump discharge.
2. Turn off circuit breaker.

CAUTION: Never work on pump with power on. Be sure ground wire from pump is connected to a good ground such as a water pipe.

3. Remove pump from sump.
4. Unscrew cap screws (26) and remove cutter ring retainer (27).
5. Unscrew hex head cap screws (17) and remove volute case (36). Cutter ring (28) can now be removed from volute (36).
6. Radial cutter (32) and axial cutter (34) are now exposed. If checking for clogging, these parts can now be cleaned without removing them from the shaft.
7. If necessary to replace cutters, remove cap screw (30), washer (31), and radial cutter (32) from shaft.

   3, 5 and 7½ horsepower model — Radial cutter (32) and impeller (23) are slip fitted onto shaft. If necessary, pry at two opposite points on back of impeller (23) while tapping with a plastic

000127

hammer to loosen. Disassemble radial cutter (32) and axial cutter (34) from the impeller (23) by removing socket head cap screws (29).

8. Clean all parts thoroughly before proceeding with assembly. For 3 and 5 horsepower pumps, replace impeller (23), axial cutter (34) and radial cutter (32) and secure together with socket head cap screws (29). Make sure impeller key (33) is in place between shaft and impeller (23).

9. Loosen hex head cap screws (57) ½ turn. Replace cutter ring (28) and cutter ring retainer (27). Now repeat steps 4-11 under Axial Cutter Adjustment. It may be necessary to loosen hex head cap screws (17) in pump case (36) and tap with a hammer to get proper clearance on O.D. of radial cutter (32).

10. Plug pump into power and operate for a few seconds only to be sure parts are not rubbing.

REPLACING SEALS

1. Remove pipe plug (37) from the top of the housing and two pipe plugs (37) from the side. The lower pipe plug drains the seal housing while the other drains the motor housing. Check for water in the oil drained from motor chamber. If there is some water in this oil, the pump must be completely dismantled and the stator dried out or replaced if the resistance to ground is less than 500,000 ohms after drying. A hypot check of 1,500 volts for 230 volt motors and 2,000 volts for 460 volt motors should be performed.

2. Remove cutters, impeller and pump parts as described above under "Replacing Grinder Parts."

3. Remove socket head cap screw (35) in seal plate (20) and screw two of the screws into the tapped back off holes to force seal plate (20) from seal housing (16). Pulling this plate (20) off will also force lower seal (21) from shaft. Remove lower seal (21) from seal plate (20).

4. Remove snap ring (38) and pull upper seal (13) from shaft. It may be necessary to use packing hooks to remove seal. Use a screwdriver to break the upper stationary ceramic seal ring so that it can be removed easily.

CAUTION: Do not use any old seal parts. Replace all parts with new pieces. Mixing old and new parts will cause immediate seal failure.

5. When cleaning all parts before replacement, check to be sure sleeve bearing or shaft is not worn. Be sure all "O" rings are in excellent condition without cuts or nicks, and replace them if not in excellent condition. Use "O" ring lube to prevent cutting at assembly.

6. After all parts are replaced and before final assembly of impeller and cutters (step 8 of "Replacing Grinder Parts"), refill seal chamber and motor chamber with oil. Lay pump on side to fill seal chamber. DO NOT FILL COMPLETELY, ALLOW ABOUT ½ INCH BELOW FILL PLUG SO THAT THERE WILL BE AN AIR SPACE FOR EXPANSION.

Figure 1

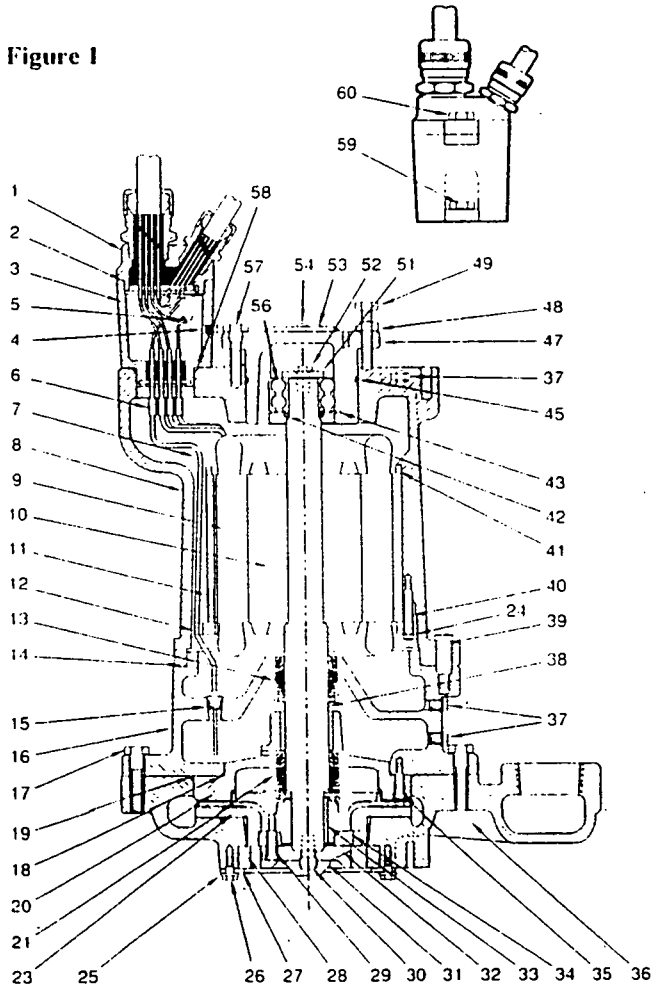

Set pump upright, and replace the upper and side drain plugs (37) before filling motor chamber. Again fill so that oil level is just over the top of winding to allow air space for expansion.

7. Use only a high grade transformer oil in the motor chamber and in the seal chamber.

REPLACING MOTOR STATOR

1. If necessary to replace stator, completely dismantle pump as described above.

2. Remove bearing housing (47) and shaft rotor assembly (10). When cap and rotor are removed, motor leads can be disconnected through the bearing cap bore. DO NOT TAPE LEADS WHEN REPLACING STATOR AS OIL WILL DETERIORATE THE TAPE AND CAUSE MOTOR FAILURE. USE ONLY TWIST ON WIRE NUTS.

3. Remove motor housing bolts (39) and lift off housing (8).

4. Remove stator screws (40) and stator clamping ring (12) (3 and 5 horsepower only) and set housing (8) on hardwood blocks. Bump housing (8) up and down on hardwood block to loosen stator which should drop out. A stator back-up ring (41), installed on some 3 and 5 horsepower pumps, will also fall out.

5. Thoroughly clean housing (8) and other parts and install new stator.

6. Connect leads through housing bore and tuck leads back behind the stator windings to prevent rubbing on rotor. USE ONLY TWIST ON WIRE NUTS TO CONNECT WIRES.

7. If the ball bearing (56) is rusted or feels rough when turned, it should be replaced. Remove snap ring (43), and pull the bearing (56) and rotor assembly (10) from the bearing cap (47). Remove hex head cap screw (52) and washer (51) and press the bearing off the shaft. Install the new bearing by pressing on inner race only. PRESSING ON THE OUTER RACE WILL RUIN THE BEARING.

8. In reassembly replace any "O" rings that are defective. Use Parker "O" Ring Lub on all "O" rings for easy assembly and to prevent cutting.

9. Completely reassemble, air test and fill with oil as described under REPLACING SEALS.

10. Always run pump for a few seconds after assembly work to be sure all parts run smoothly and are correctly adjusted before replacing in sump. Check again for correct rotation. Pump should rotate counterclockwise when viewed from the suction.

NOTE: When applying power, be sure the pump is restrained from turning by holding the pump at the motor housing, or by clamping it in a holding fixture.

CAUTION: Always keep hands away from the pump cutter area after the circuit breaker is reconnected.

Figure 1

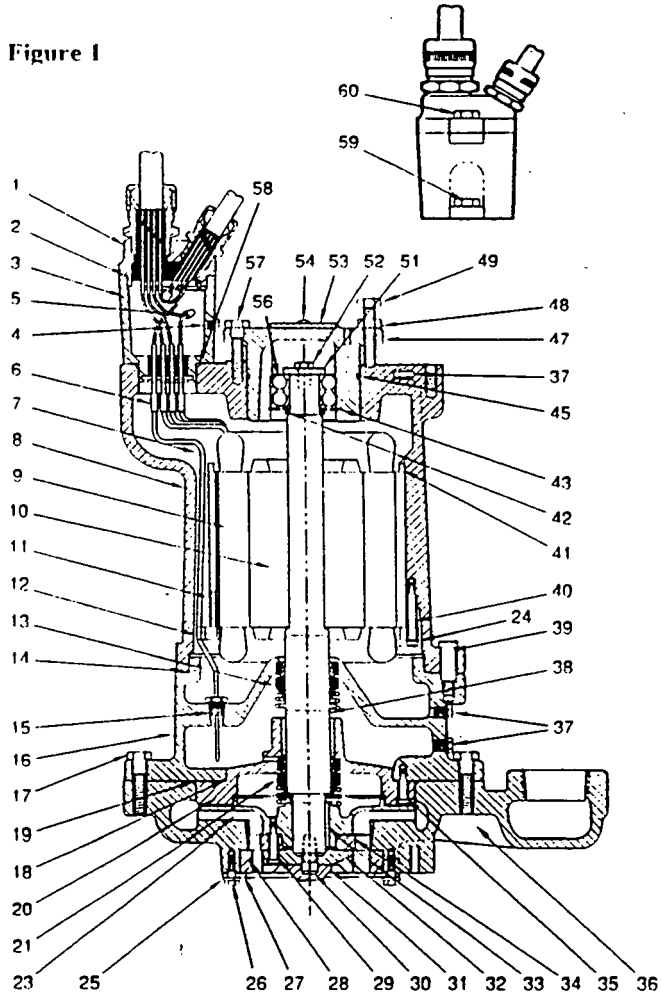

000129

5

TROUBLE CHECK LIST

Below is a list of troubles and their probable causes.

No liquid delivered

1. Pump air bound
2. Discharge head too high
3. Pump or piping plugged
4. Wrong rotation
5. Speed too low

Insufficient liquid delivered

1. Discharge head too high
2. Impeller or cutters partially plugged or damaged
3. Wrong rotation
4. Incorrect diameter impeller
5. Speed too low

Insufficient discharge pressure

1. Wrong rotation
2. Air or gases in liquid
3. Impeller damages
4. Incorrect impeller diameter
5. Speed too low

Pump overloads motor

1. Wrong rotation
2. Specific gravity or viscosity of liquid too high
3. Speed too high
4. Head lower than rating, pumping too much liquid
5. Pump clogged
6. Defective bearings
7. Defective impeller

Pump is noisy

1. Defective bearings
2. No axial clearance between impeller and volute
3. No axial clearance between cutter ring and axial cutter
4. No diametral clearance between radial cutter and cutter ring

If the cause of the trouble cannot be determined as corrected as outlined above contact your nearest factory representative.

TROUBLE SHOOTING NOTES:

000130

SPGH300/500/750 PARTS LIST

Ref. No.	Part No.	Part Description		Qty.
1	05523-030-5	Cord & Cap Assy. 10/1 30 Single		1
	05464-030-5	Cord & Cap Assy. 10/1 30 Dual		1
2	00834-010-1	O-Ring	S	1
3	05430-002-5	Connection Box 200/230V 1ø		1
	05430-002-5	Connection Box 200V 3ø		1
	05430-005-5	Connection Box All 230/460V 3ø		1
4	00087-004-1	Pipe Plug		1
5	00557-000-1	Wire Connector 200/230V 1ø		3
	00557-000-1	Wire Connector 200V 3ø		3
	00557-000-1	Wire Connector 230V 3ø		4
	00557-000-1	Wire Connector 460V 3ø		6
6	00282-001-1	Wire Connector 200/230V 1ø		6
	00282-001-1	Wire Connector 200V 3ø		6
	00282-001-1	Wire Connector All 230/460V 3ø		12
7	06000-014-5	Seal Failure Wire		1
8	07890-000-2	Motor Housing		1
9	08053-003-1	Stator 3HP 1ø 230V		1
	08053-203-1	Stator 3HP 1ø 200V		1
	08434-003-1	Stator 3HP 3ø 230/460V		1
	08434-203-1	Stator 3HP 3ø 200V		1
	00764-001-1	Stator 5HP 1ø 230V		1
	00765-003-1	Stator 5HP 3ø 230/460V		1
	00765-203-1	Stator 5HP 3ø 200V		1
	13219-003-1	Stator 7½ 230/460V 3ø		1
10	08053-012-5	Rotor w/Shaft 3HP 200/230V 1ø		1
	08434-012-5	Rotor w/Shaft 3HP 200, 230, 460V 3ø		1
	00764-014-5	Rotor w/Shaft 5HP 200/230V 1ø		1
	00765-014-5	Rotor w/Shaft 5HP 200, 230, 460V 3ø		1
	13219-011-5	Rotor w/Shaft 7½ HP 230/460V 3ø		1
11	05454-001-1	Spring Pin		1
12	00299-002-1	Stator Retainer		1
13	04916-000-1	Upper Seal	S	1
14	00150-020-1	O-Ring	S	1
15	08472-001-5	Seal Failure Assy.		1
16	07888-000-2	Seal Housing		1
17	00238-007-1	Cap Screw		6
18	00150-036-1	O-Ring	S	1
19	00150-019-1	O Ring	S	1
20	07889-004-5	Seal Plate w/Bearing 3 & 5HP	R	1
	07889-008-5	Seal Plate w/Bearing 7½HP	R	1
21	04916-000-1	Lower Seal		1
23	07893-001-2	Impeller 6¾" 5HP		1
	07893-003-2	Impeller 6¾" 5HP		1

Ref. No.	Part No.	Part Description		Qty.
	07893-005-2	Impeller 5¾" 5HP		1
	07893-007-2	Impeller 5¾" 3HP		1
	07893-009-2	Impeller 4¾" 3HP		1
	07893-012-2	Impeller 6.866" 7½HP		1
24	00995-008-1	Lock Washer		4
25	00177-004-1	Lock Washer		3
26	00176-003-1	Cap Screw		3
27	07911-000-1	Cutter Ring Retainer		1
28	07910-000-2	Cutter Ring	R	1
29	00517-010-1	Screw (Soc. Hd.)		2
30	00556-004-1	Impeller Screw (Soc. Hd.)		1
31	08422-000-1	Impeller Washer		1
32	07908-000-2	Cutter, Lower Radial	R	1
33	06579-003-1	Impeller Key		1
34	07909-000-2	Cutter, Upper Axial	R	1
35	00517-005-1	Screw (Soc. Hd.)		4
36	07892-000-2	Volute Case 3 & 5HP		1
	07892-001-2	Volute Case 7½HP		1
37	00119-002-1	Pipe Plug		3
38	00975-012-1	Snap Ring		1
39	00568-007-1	Cap Screw (Soc. Hd.)		4
40	00517-008-1	Cap Screw (Soc. Hd.)		4
41	00736-001-1	Stator Spacer Ring 5HP 3ø		1
	00736-003-1	Stator Spacer Ring 3HP 1ø		1
	00736-004-1	Stator Spacer Ring 3HP 3ø		1
42	00156-055-1	Spacer		1
43	00974-008-1	Snap Ring		1
45	00150-029-1	O-Ring	S	1
47	07895-006-2	Bearing Housing		1
48	00114-005-1	Nut		3
49	00101-034-1	Cap Screw		3
51	00156-053-1	Washer		1
52	00101-005-1	Cap Screw		1
53	13425-027-1	Nameplate		1
54	04580-001-1	Drive Screws		2
56	07167-011-1	Bearing	R	1
57	00238-003-1	Cap Screw		3
58	00834-008-1	O-Ring		1
59	00238-003-1	Cap Screw		2
60	00101-007-1	Cap Screw		2
	51700-014-7	Seal Kit		1
	51700-110-7	Rebuild Kit (SPGH 300/500)		
	51700-111-7	Rebuild Kit (SPGH 750)		

Notes: S Parts in Seal Kit
R Parts in Rebuild Kit

ORDERING REPLACEMENT PARTS: Product improvements are made from time to time. The latest part design will be furnished as long as it is interchangeable with the old part.

When ordering replacement parts, always furnish the following information:

1. Pump serial number
2. Pump model and size
3. Part description
4. Part number
5. Impeller diameter (if ordering impeller)
6. Quantity required
7. Shipping instructions

000131

SPGH

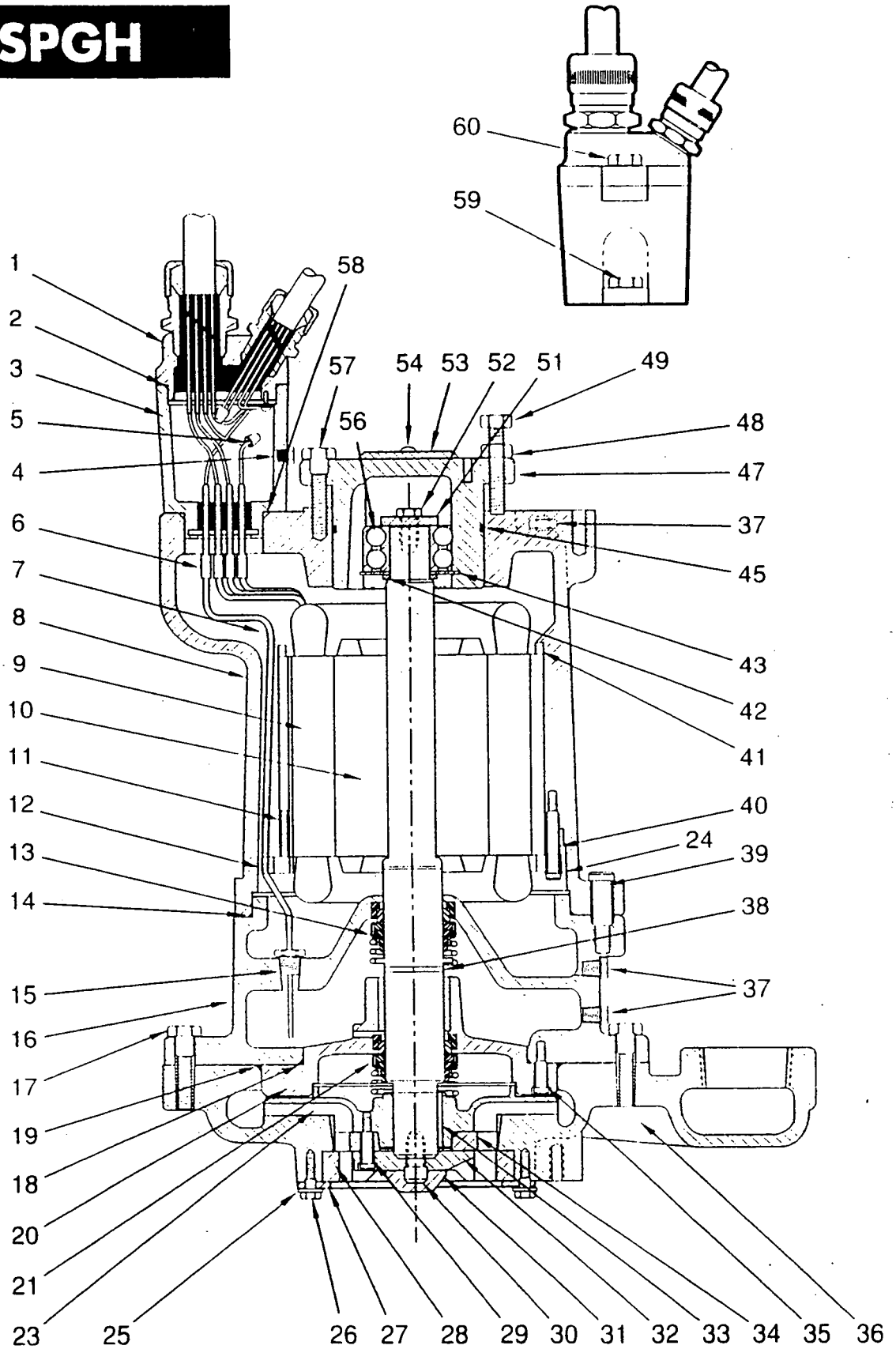
60
59
1
2
3
5
4
6
7
8
9
10
11
12
13
14
15
16
17
19
18
20
21
23
25
58
57
56
54
53
52
51
49
48
47
37
45
43
42
41
40
24
39
38
37
26
27
28
29
30
31
32
33
34
35
36

000132

7412

Bulletin Q-701

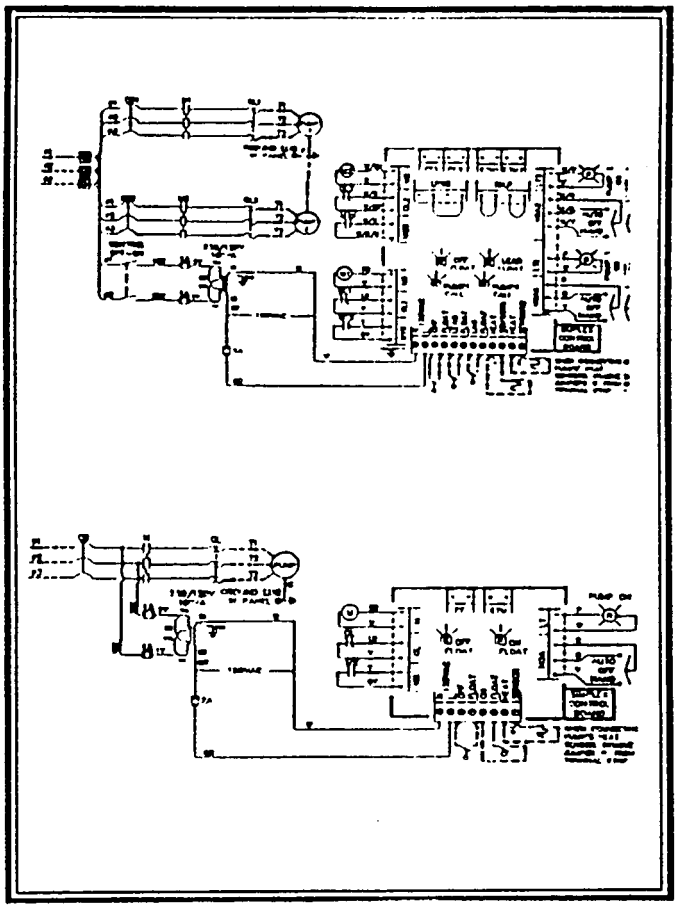

Installation and Service Manual

STANDARD ELECTRICAL "Q" PANELS

AURORA/HYDROMATIC Pumps, Inc.

WARNING: Before handling these pumps and controls, always disconnect the power first.

Do not smoke or use sparkable electrical devices or flames in a septic (gaseous) or possible septic sump.

PANEL PREPARATION: Prior to installing the control panel, tighten all screws and nuts. Make sure that all electrical connections are secure.

CONTENTS

	Page
Installation Instructions	2
Maintenance	3
Parts List	3
Trouble Check List	3-5

000133

INSTALLATION INSTRUCTIONS

ELECTRICAL CONNECTIONS

The contractor must conform to the latest requirements of the National Electrical Code. All conduit and cables shall be in accordance with NEC code NFPA#70. To maintain UL type 4x and CSA ENCL 4 rating, use UL type 4 and CSA weatherproof conduit hubs when connecting to this enclosure. Prior to conducting any installation, repair or service with regard to the control panel, refer to the schematic appropriate for that panel. The schematic will provide guidance with regard to the terminal block connections.

"CAUTION" - "Nonmetallic enclosure does not provide grounding conduit connections. Use grounding bushing and jumper wires."

Make the Following Electrical Connections:

a. Connect the pump heat sensor and seal failure leads (if available on the pump) to the appropriate terminall blocks in the control panel. If the heat sensor lead from the pump is wired as indicated, remove jumpers as defined by the schematic.
b. Connect all the float control leads to the appropriate panel terminal blocks. Contractor must be very careful in locating the floats at the proper elevations. The maximum distance from the control panel and the floats is the lesser of 100 feet, or the maximum distance recommended for the pump.
c. Connect the pump leads to the control panel. When connecting the pump leads it is very critical that the proper sequence be maintained. On single phase pumps, connect the color coded pump leads to the appropriate terminals as directed by the control schematic.
d. BEFORE CONNECTING POWER TO THE CONTROL PANEL, MAKE SURE ALL CONTROL SWITCHES (e.g. H-O-A SWITCH) AND PROTECTIVE DEVICES (e.g. BREAKERS) ARE IN THE OFF POSITION. NOW CONNECT POWER TO THE TERMINAL BLOCK OR THE CIRCUIT BREAKER AS DIRECTED BY THE SCHEMATIC.
e. CONTROL PANEL MUST BE GROUNDED PROPERLY PER NEC AND/OR LOCAL CODES. TO FACILITATE THIS, A GROUND LUG IS PROVIDED ON THE CONTROL PANEL.

START UP CHECK LIST

WARNING: Before handling these pumps and controls, always disconnect power first. Do not smoke or use sparkable electrical devices or flames in a septic (gaseous) or possible septic sump.

Check List:

1. Check junction box for moisture. Moisture may cause chattering of relays/contactors.
2. Check wiring of capacitor pack for single phase applications
3. Energize control panel. (Turn on power to panel.)
4. Check overload relay and verify reset mode (if overload is supplied).
5. **WARNING! LIVE VOLTAGE CAN KILL!** Check voltage to the panel and at secondary of control transformer using a voltmeter. If no transformer is supplied, check voltage at the circuit breakers.
6. Check float operation and response of control panel to the float operation. For sequence of operation, refer to design specification.
7. Check full load current with amp probe and compare it with the nameplate rating. (Clamp amp probe around one phase.)
8. With pump running, check discharge to verify the pump is running. Check for flow.
9. Check voltage with voltmeter, and amperage with amp probe at overhead.
10. Check operation of start relay, if supplied on single phase panels, per procedure in item #7 of Maintenance Instructions below.
11. Make sure H-O-A switch is left in the "Auto" position after start-up is completed.

Pump Start Up:

Refer to pump "Installation and Service Manual".

PERIODIC MAINTENANCE

WARNING: Before handling these pumps and controls, always disconnect the power first. Do not smoke or use sparkable electrical devices or flames in a septic (gaseous) or possible septic sump.

000134

The maintenance schedule will vary with operating and environmental conditions. It will also vary with the specific type of control supplied. The list herein is a guide only.

1. Exercise breaker through two cycles. Be careful not to over-exercise as the breaker is not a switching device. Excessive operations tend to affect the trip curve of the breaker.
2. Check contactors and relays for excessive humming. This can be accomplished by turning pumps on and off in the hand and off modes with the H-O-A switch.
3. Check bulbs in all fixtures.
4. Check continuity through control fuses.
5. Check voltage at primary and secondary of control transformer.
6. Check the pump full load amps.
7. Check the start relay (if supplied) by using an amp probe around the red wire (start winding). Amp probe should display a very brisk action from zero to locked rotor and back to operating load. This action occurs on pump start, and the action must show no lazy movement.
8. Check junction boxes for moisture. Moisture may cause chattering of relays and contactors.
9. Check door gasket for proper seal. This can be a visual inspection.
10. Check labels to verify they have not been damaged.
11. Lubricate enclosure hinges.
12. Pull floats and check for proper operation and insure there is no foreign build up on them.

SPARE PARTS LIST

The following is a list of recommended spare parts. However, conditions of service vary significantly and a general list may not in its entirety be applicable to a given installation. The user should exercise judgement in defining specific requirements based on this guide.

1. Fuses for control transformer - primary and secondary.
2. Contactor.
3. Bulbs for lights.
4. Corrosion inhibitor.
5. Control transformer.
6. Duplex or simplex pump controller.

TROUBLESHOOTING CHART

1. **WARNING: Before handling these pumps and controls, always disconnect the power first. Do not smoke or use sparkable electrical devices or flames in a septic (gaseous) or possible septic sump.**
2. Pump does not run in hand position.
   a. Check pump circuit breaker, control circuit breaker, and control fuses for tripping or blown condition.
   b. Check overload relay to see if it is tripped. Reset relay if tripped.
   c. Check heat sensor reset to verify thermal overload of motor has not tripped.
   d. Check wiring of pump to control panel. It should agree with the schematic.
3. Pump does not run in auto position.
   a. Check items a. through d. per item #2 above.
   b. Floats may be miswired to control panel. Check float type (N.O. or N.C.) and hook-up by referring to the schematic. If the start and stop floats are hooked in reverse, pump will short cycle and will not pump the level down.
   c. Check pump controller indicating lights.

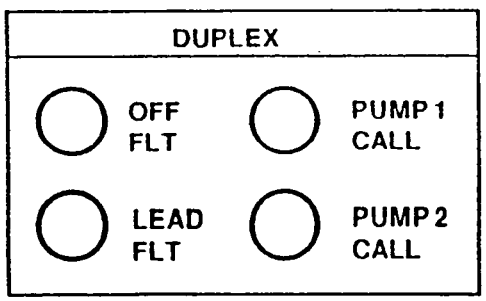

No Lights ON (No call from the floats)

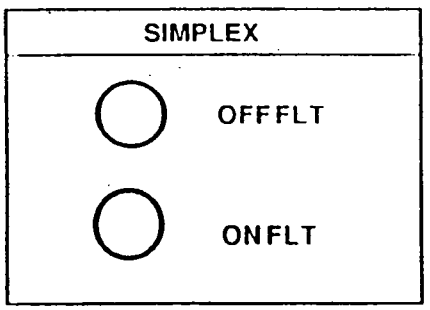

1. Make sure there is power to the controller.
2. Is water level in the system high enough to activate the floats?
3. If #1 and #2 check out, shut power off to the panel. Remove the off float wires and run a jumper between the "OFF FLOAT" connections. If "OFF FLOAT" light comes on, the float is "hung up" or the wiring connections are loose.

DUPLEX			
○	PUMP 1 CALL	●	OFF FLT
○	PUMP 2 CALL	○	LEAD FLT

OFF Light ON

SIMPLEX	
●	OFF FLT
○	ON FLT

1. Is water level in the system high enough to activate the lead (ON) float?
2. If #1 checks out, shut off power to the panel. Remove the lead (ON) float wires and run a jumper between the "LEAD FLOAT" ("ON FLOAT") connections. If one or two pumps start, check the lead (ON) float for "hang up" or loose wiring connections.

DUPLEX ONLY				
○	PUMP 1 CALL	●	OFF FLT	FLOAT" light "ON", "LEAD FLOAT" light ON, and either "PUMP 1" or "PUMP 2" light ON tells you the lead float is calling for pump.
●	PUMP 2 CALL	●	LEAD FLT	
OR				
●	PUMP 1 CALL	●	OFF FLT	All lights ON on pump controller tells you all float circuits are good and the problem lies elsewhere.
●	PUMP 2 CALL	●	LEAD FLT	

1. Check hand-off-auto (H-O-A) switch for correct position.
2. Check heat sensor trip in pump with a jumper between "HEAT SENSOR 1" and "HEAT SENSOR 2" terminals.
3. Reset overload(s) if tripped.
4. Reset circuit breakers if tripped.

4. Pump runs, but run light does not energize.
   a. Check the bulb.
   b. Check for loose wire at light or in panel.
5. Pump runs but does not pump down the wet well.
   a. Pump rotation may be wrong. Wiring of pump to control panel may be reverse sequenced.
   b. Impeller may be dragging in volute due to solids.. High amperage draw would identify this.
   c. Refer to the pump manual for other possibilities such as closed discharge gate valve, etc.
6. Severe humming/chattering of contactors and control relays.
   a. There may be low voltage. Check voltage at primary and secondary of control transformer using a voltmeter. This low voltage condition may even cause severe chattering and burn-out of relays.
   b. Contactor may have dust around magnet of coil structure. Dry or clean as required.
   c. Check voltage to the control panel. Contactors require a minimum of 85% of full voltage to pull in without chatter. If the problem is a reoccuring one, measure voltage with recorder on a 24 hour basis.
   d. Make sure the floats are located away from any turbulence.
   e. Dry out the junction box (if furnished); moisture in the junction box may tend to cause relays to energize intermittently.

7. Nuisance tripping of overload on motor starters or circuit breakers.
   a. Check all reset buttons and tripped breakers.
   b. Check pump and draw with amp probe and compare to name-plate amps on pump.
   c. The impeller may be locked up due to excessive debris or solids.
   d. Possible motor failure (fault on windings.)
   e. Pump may be miswired to terminal block.

000136

f. Voltage and current unbalance. Three phase only.
Voltage unbalance on three-phase power sources can cause motor current to become unbalanced and excessive heating will result. Tripping of the overload protectors, and premature motor failures, can be expected if the current unbalance exceeds five per cent.

$$\text{Percent Current Unbalance} = \frac{\text{Maximum Current Difference From Average Current}}{\text{Average Current}} \times 100$$

To determine if motor current unbalance is a function of the motor, or the power supply:

1. Label the leads and the terminals 1, 2, and 3 respectively.
2. Record the amperage for each lead.
3. Move each lead to the text terminal (1 to 2, 2 to 3, 3 to 1).
4. Again read the amperage of each lead.
5. Move each lead to the next terminal (1 to 3, 2 to 1, 3 to 2).
6. Again read the amperage of each lead.
7. If the unbalance moves with the motor leads, the unbalance is caused by the motor. If the unbalance remains with the terminals, the unbalance is in the power supply.
8. If the current unbalance exceeds five percent, nuisance tripping, or excessive heating will result.
9. Connect leads for the lowest percent of current unbalance.

g. Connections and start components. Single phase only.

1. DISCONNECT ALL POWER FROM THE PANEL BEFORE MAKING THESE CHECKS.
2. Motor winding resistance readings.
   a. Disconnect all three motor leads.
   b. Using a volt ohm meter, with the scale set on RX1, measure the resistance between the leads with the chart below.

WINDING	TYPICAL MOTOR LEADS	RESISTANCE READING
Main	Black to White	Lowest
Start	Black to Red	Next Lowest (middle)
Both	White to Red	Highest

3. Capacitor check.
   a. Make sure the capacitor is discharged. Use extreme caution as a spark might occur.
   b. Disconnect the capacitor leads and connect a volt-ohm meter to the capacitor terminals.
   c. The meter should indicate low ohms when it is first connected, but as the capacitor becomes charged (by the meter), it will return to a reading of infinity (open circuit).

NOTE: Set the meter on the RX10,000 scale to check the run capacitor.
Set the meter on the RX1,000 scale to check the start capacitor.

4. Start relay check.
   a. Check the coil resistance. It should be 3,000 to 7,000 ohms.
   b. Install a clamp on amp meter around the start winding lead.
   c. Set the amp meter scale to at least 2 times the pump motor full load current.
   d. Place the HOA switch in the hand position to start the pump.
   e. The meter should read approximately 2 times full load current during starting.
   f. After the motor has started (within one second) the current should drop to a value much less than full load current.
5. Motor voltage check.

COMPONENT	TYPICAL MOTOR LEAD	MODE	VOLTAGE READING
Main Winding	Black to White	Start	Line Voltage
Main Winding	Black to White	Run	Line Voltage
Start Winding	Black to Red	Start	Line Voltage
Start Winding	Black to Red	Run	120% Line Voltage

8. Short cycling pump.
   Check float controls.
9. Run light stays on.
   Selector switch may be in the hand position.
10. Test for blown fuse.
   Check for continuity with a V-O-M set on OHM scale.

Dimensional Data SPGH

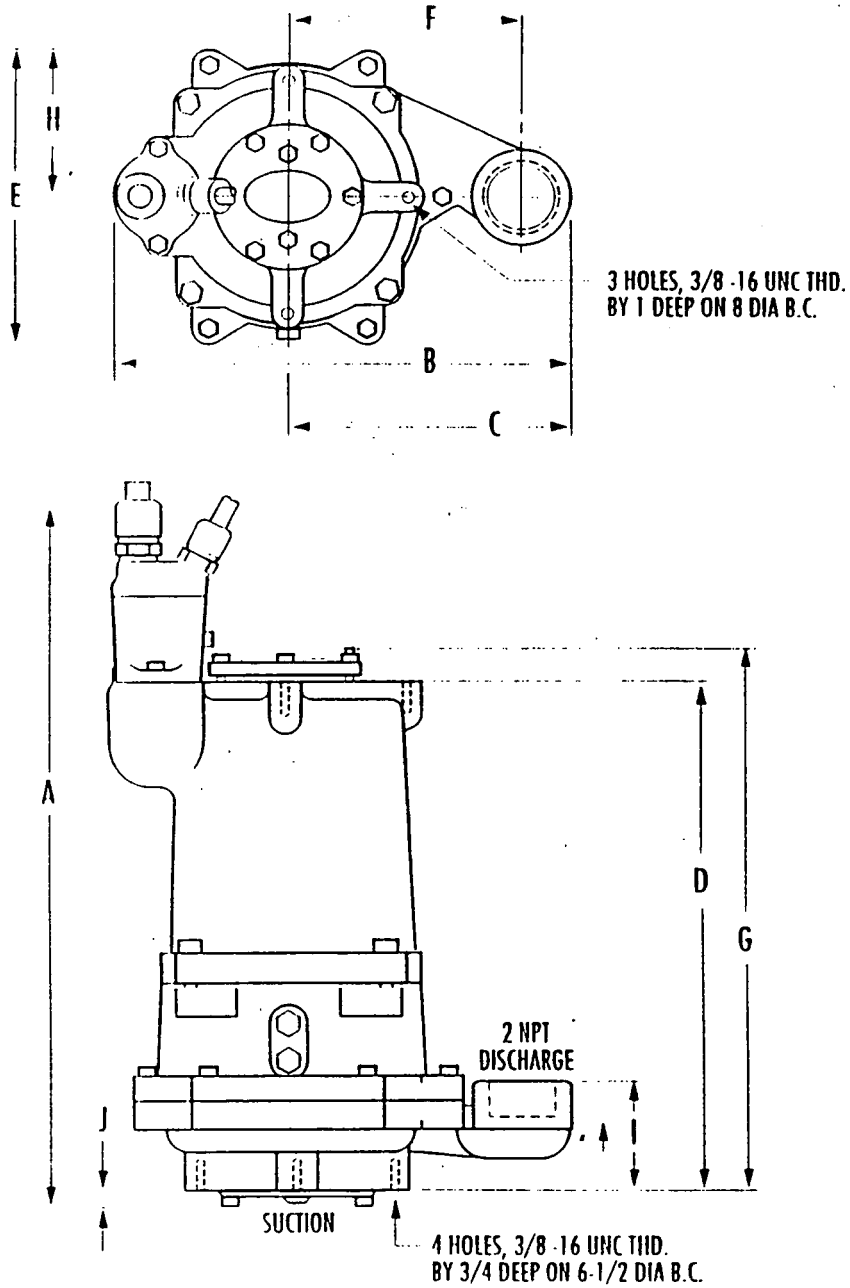

	A	B	C	D	E	F	G	H	J	I
SPGH~~300/500~~/750	23-3/8	15-1/4	9-5/16	16-3/4	9-3/4	7-3/4	17-3/4	4-7/8	3/8	3-3/8

ALL DIMENSIONS IN INCHES
NOTE: CASTING DIMENSIONS MAY VARY ± 1/8"

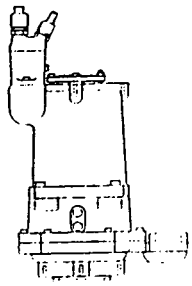

Performance Curve SPGH/G2HX

RPM: **3500** Discharge: **2"**

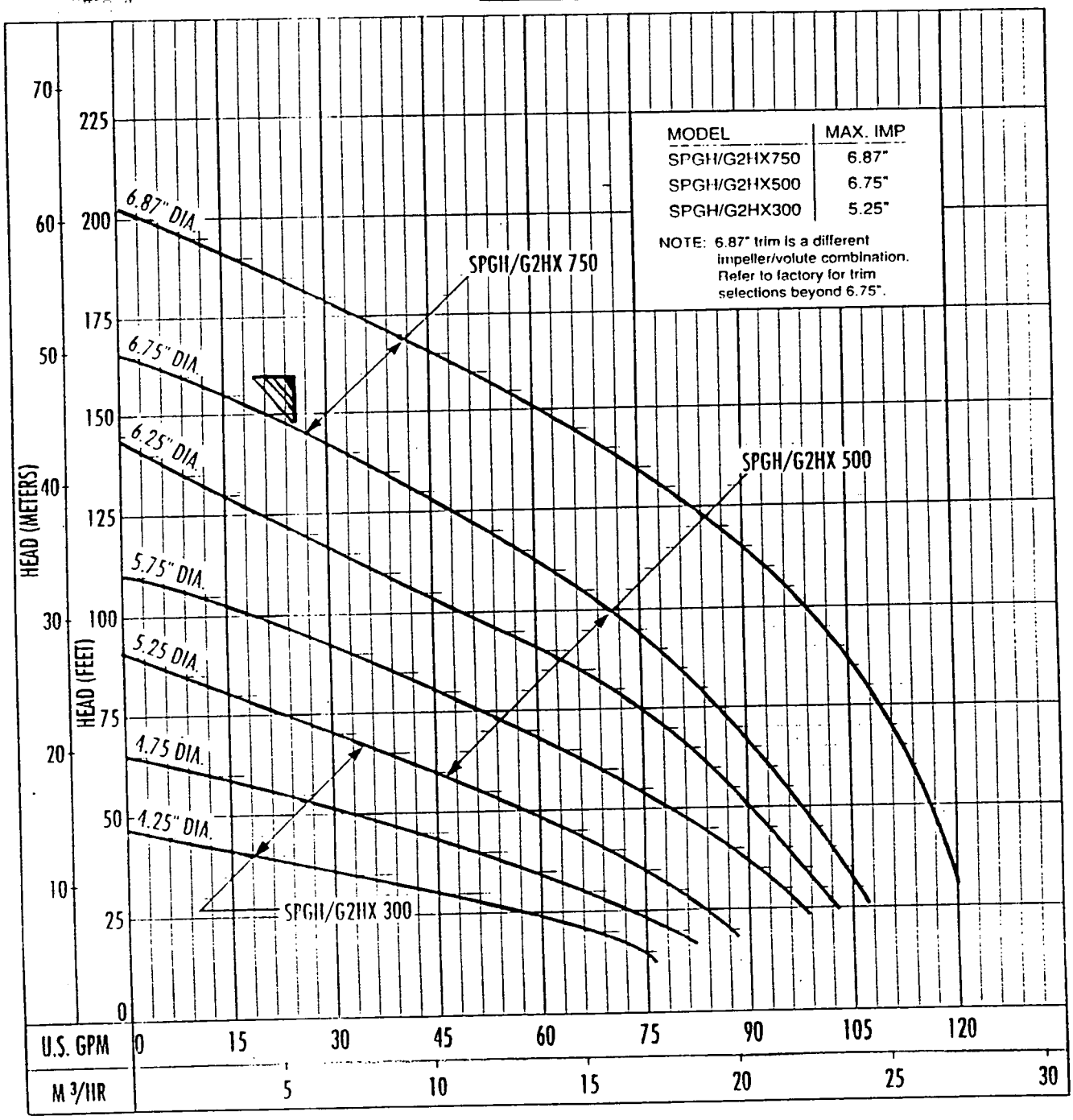

MODEL	MAX. IMP
SPGH/G2HX750	6.87"
SPGH/G2HX500	6.75"
SPGH/G2HX300	5.25"

NOTE: 6.87" trim is a different impeller/volute combination. Refer to factory for trim selections beyond 6.75".

Operating point must fall within curve.

EAST STATION

Conditions of Service:
GPM: 25 TDH: 160
ONE UNIT

AURORA PUMP
A UNIT OF GENERAL SIGNAL

HYDROMATIC™ PUMPS

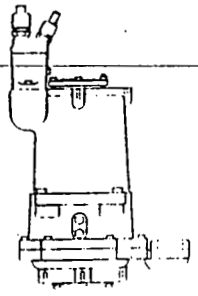

Performance Curve

SPGH/G2HX

RPM: **3500** Discharge: **2"**

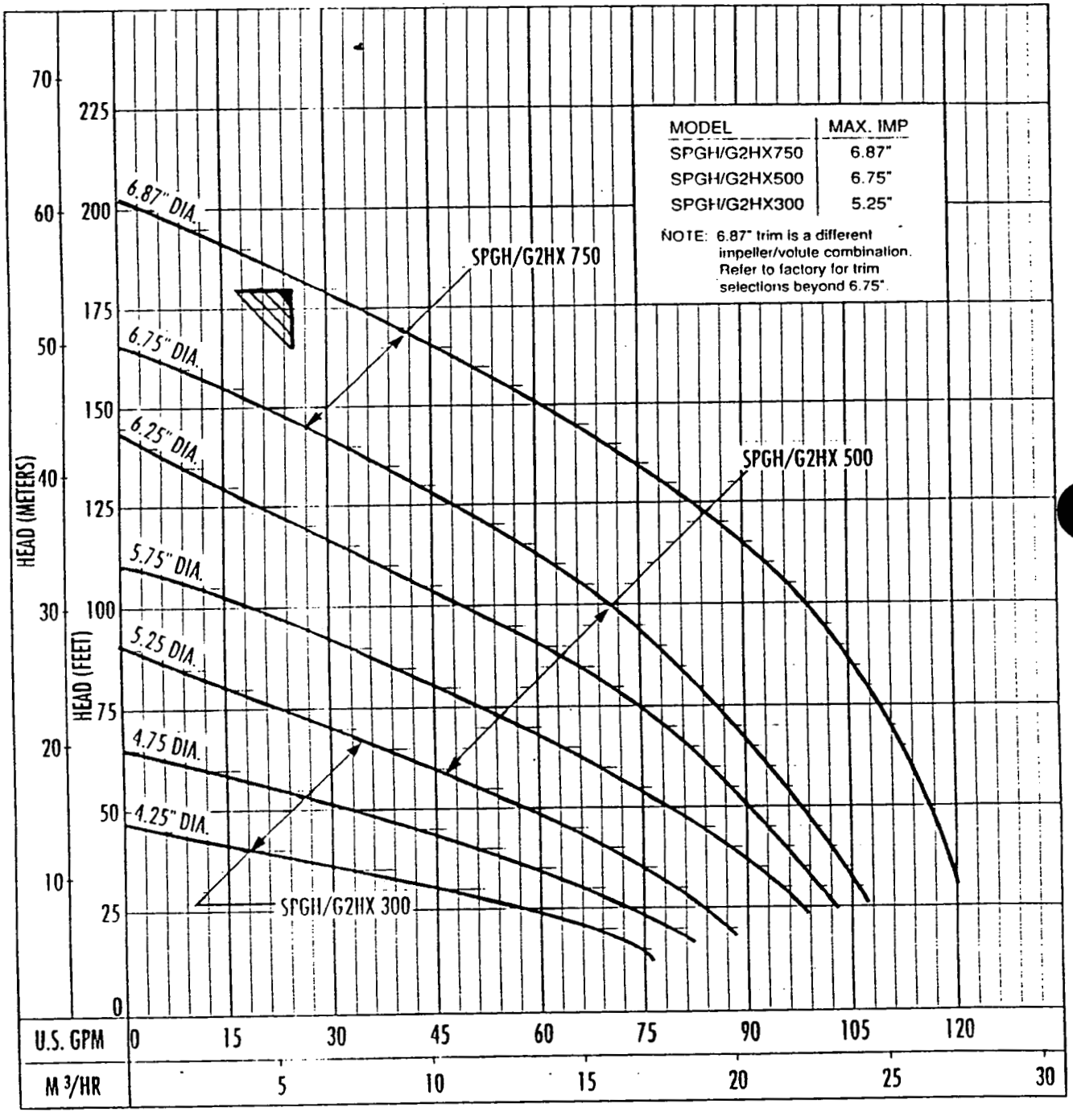

MODEL	MAX. IMP
SPGH/G2HX750	6.87"
SPGH/G2HX500	6.75"
SPGH/G2HX300	5.25"

NOTE: 6.87" trim is a different impeller/volute combination. Refer to factory for trim selections beyond 6.75".

Operating point must fall within curve.

WEST STATION

000140

AURORA PUMP
A UNIT OF GENERAL SIGNAL

Conditions of Service:
GPM: 25 TDH: 180

HYDROMATIC™ PUMPS

TWO UNITS

Technical Data

SPGH

MODEL: SPGH — Standard Grinder Pumps

Physical Data:

DISCHARGE SIZE	2"
IMPELLER TYPE	SEMI-OPEN 5 VANE
CABLE LENGTH	30' STANDARD ~~50' OPTIONAL~~
PAINT	PAINTED AFTER ASSEMBLY BEFORE TESTING. DARK GREEN, ALKYD, ENAMEL, ONE COAT, AIR DRIED.

Temperature:

MAXIMUM LIQUID	140°F
MAXIMUM STATOR	266°F
OIL FLASH POINT	390°F
HEAT SENSOR Open:	257°F MAX./239°F MIN.
Closed:	194°F MAX./149°F MIN.

Technical Data:

POWER CORD TYPE		STW/STW-A WATER RESISTANT 600V, 60°C
SENSOR CORD TYPE		16-4 STW-A WATER RESISTANT 600V, 60°C, 10 AMPS
MATERIALS OF CONSTRUCTION	MOTOR HOUSING	CAST IRON ASTM A-48 CLASS 30
	CASING	CAST IRON ASTM A-48 CLASS 30
	IMPELLER	RED BRASS #85-5-5-5 ASTM B584-836
	CUTTERS	
	Stationary:	440C STAINLESS STEEL HARDENED TO 55-60 ROCKWELL C
	Upper (Axial):	440C STAINLESS STEEL HARDENED TO 55-60 ROCKWELL C
	Lower (Radial):	440C STAINLESS STEEL HARDENED TO 55-60 ROCKWELL C
	MOTOR SHAFT	416 STAINLESS STEEL
	HARDWARE	300 SERIES STAINLESS STEEL
	"O" RINGS	BUNA N
MECHANICAL SEALS		
	Standard:	UPPER AND LOWER CARBON/CERAMIC, TYPE 21, BF1C1
	Optional:	~~LOWER TUNGSTEN CARBIDE/TUNGSTEN CARBIDE, TYPE 21, BD1D1~~
UPPER BEARING		(THRUST & RADIAL) DOUBLE ROW — BALL
LOWER BEARING		OILITE BRONZE BUSHING
MIN. B-10 BEARING LIFE		50,000 Hrs

MODEL: SPGH—Standard Grinder Pump

R.P.M.	3450
MOTOR TYPE	ENCLOSED, OIL COOLED INDUCTION
MOTOR DESIGN NEMA TYPE	B (3ø) L (1ø)
GENERAL INSULATION CLASS	B
STATOR WINDING CLASS	F
MAXIMUM STATOR TEMPERATURE	266°F
MOTOR PROTECTION	BI-METALLIC, TEMPERATURE SENSITIVE DISC, SIZED TO OPEN AT 120°C AND AUTOMATICALLY RESET @ 30–35°C DIFFERENTIAL, ONE IN SINGLE PHASE, TWO IN THREE PHASE
VOLTAGE TOLERANCE	±10%

HP	VOLTAGE	PHASE	NEC CODE	SF	FULL LOAD AMPS	SF AMPS	LCKD. RTR. AMPS	RUN KW	START KVA	RUN KVA	MTR. EFF. 100% FL	MTR. EFF. 75% FL	MTR. EFF. 50% FL	PWR. FACT. 100% FL	PWR. FACT. 75% FL	PWR. FACT. 50% FL
3.0	200	1	F	1.2	20.6	25.8	81	3.8	16.2	4.1	.59	.57	.51	.93	.92	.88
	230				17.9	22.4	70.5									
5.0	230	1	F	1.2	25.9	32.9	125	5.5	28.8	6.0	.68	.68	.64	.92	.92	.92
3.0	200	3	G	1.2	10.9	12.9	53	3.2	14.4	3.8	.70	.67	.62	.85	.82	.75
	230				9.4	11.2	46.2									
	460				4.7	5.6	23									
	575				3.8	4.5	18.5									
5.0	200	3	G	1.2	17.9	21.5	83	5.4	28.7	6.2	.70	.68	.63	.87	.86	.84
	230				15.6	18.7	72									
	460				7.8	9.4	36									
	575				6.2	7.5	28.8									
7.5	~~200~~	3	H	1.2	~~24.8~~	~~29.7~~	~~149.5~~	7.4	51.8	8.6	.76	.75	.70	.87	.85	.80
	~~230~~				~~21.5~~	~~25.8~~	~~130~~									
	460				10.8	12.9	65									
	~~575~~				~~8.6~~	~~10.3~~	~~52~~									

000142

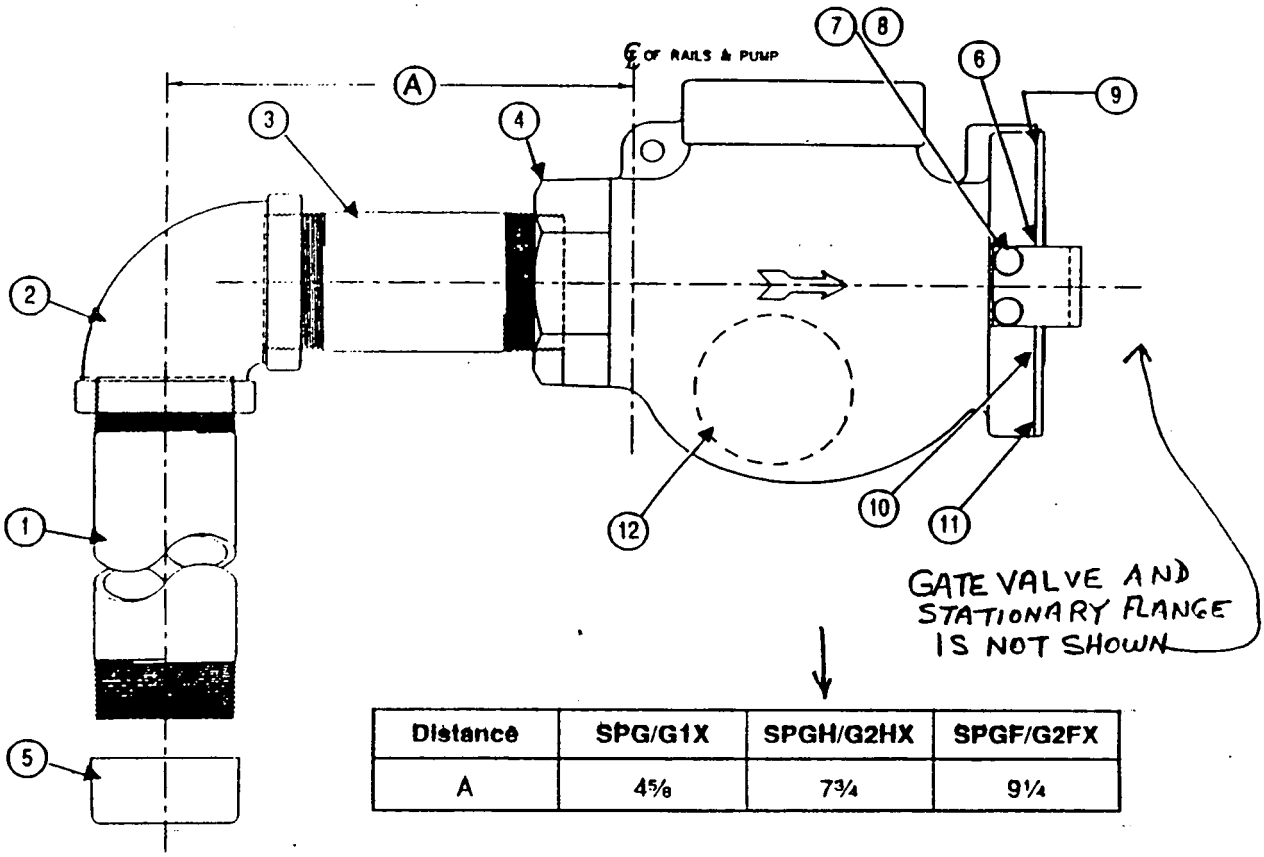

Distance	SPG/G1X	SPGH/G2HX	SPGF/G2FX
A	4⅝	7¾	9¼

DISCHARGE PIPING		PUMP MODEL AND PART NUMBER		
REF. NO.	ITEM DESCRIPTION	SPG/G1X PART NO.	SPGH/G2HX PART NO.	SPGF/G2HX PART NO.
1	Long Nipple	7292-133-3	7286-125-3	7286-125-3
2	Elbow	2465-002-1	2465-009-1	2465-009-1
3	Short Nipple	3351-001-1	7286-128-1	7286-128-3
4	Check Valve	5520-000-5	6918-001-5	6918-001-5
5	Thread Protector	7405-001-1	7405-002-1	7405-002-1

CHECK VALVE (#4)		PUMP MODEL AND PART NUMBER			
REF. NO.	ITEM DESCRIPTION	QTY.	SPG/G1X PART NO.	QTY.	SPGH/G2HX—SPGF/G2FX PART NO.
6	Lug	2	5519-000-3	2	5519-000-3
7	Screw (Holds Lugs)	4	176-001-1	4	176-001-1
8	Lock Washer (Holds Lugs)	4	177-004-1	4	176-004-1
9	Sealing Diaphragm	1	5515-001-1	1	6898-000-1
10	Ring to Hold Diaphragm	1	5514-000-1	1	6914-000-1
11	Screws to Hold Ring	6	829-003-1	8	829-003-1
12	Neoprene Ball	1	5078-000-1	1	5078-001-1

HYDROMATIC

AURORA / HYDROMATIC PUMPS, INC.

PUMP DISCHARGE PIPING AND CHECK VALVE

000144

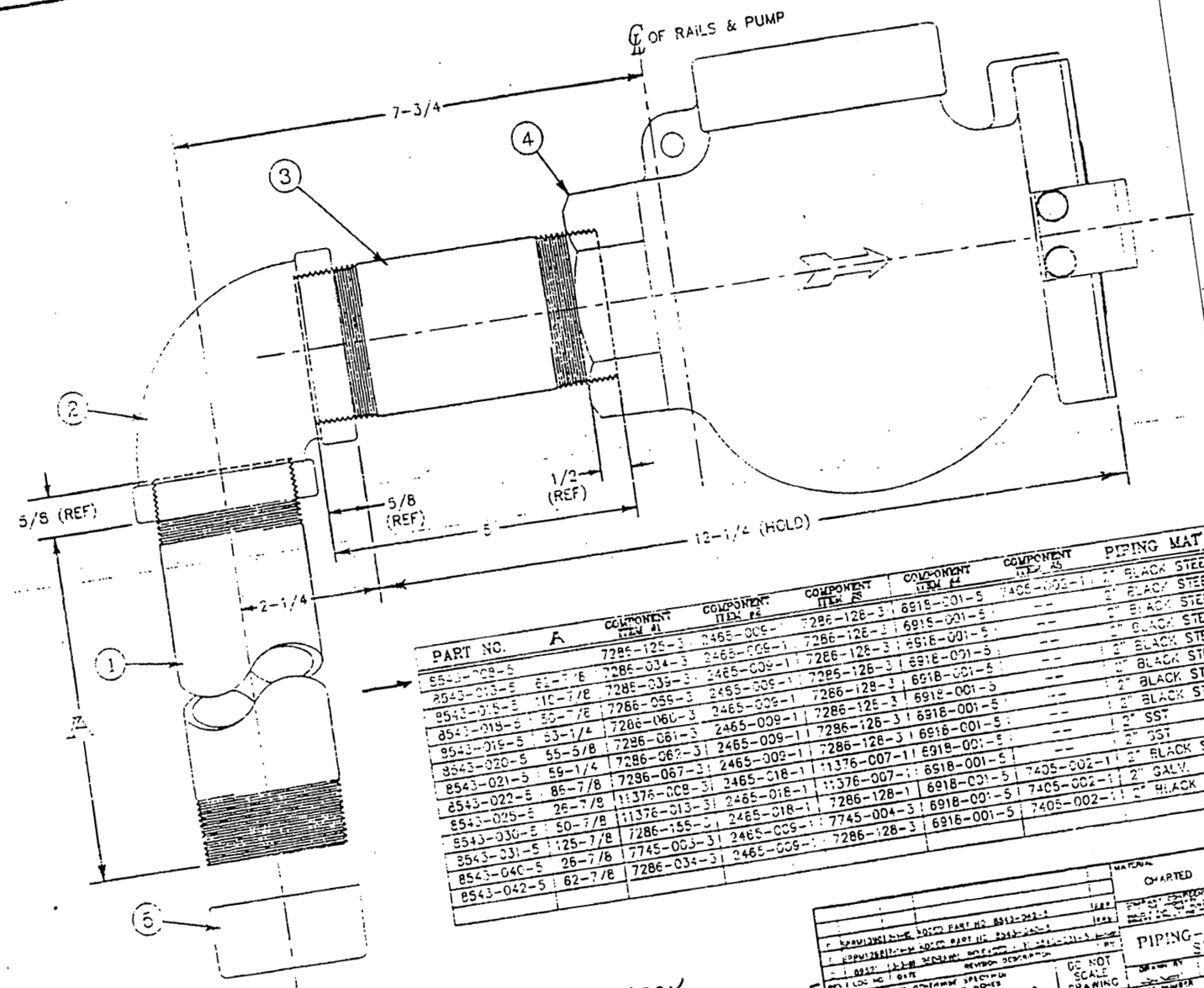

PART NO.	A	COMPONENT ITEM #1	COMPONENT ITEM #2	COMPONENT ITEM #3	COMPONENT ITEM #4	COMPONENT ITEM #5	PIPING MAT'L
8543-008-5		7286-125-3	2465-009-1	7286-128-3	6918-001-5	7405-002-1	2" BLACK STEEL
8543-013-5	62-7/8	7286-034-3	2465-009-1	7286-128-3	6918-001-5	--	2" BLACK STEEL
8543-016-5	116-7/8	7286-039-3	2465-009-1	7286-128-3	6918-001-5	--	2" BLACK STEEL
8543-018-5	50-7/8	7286-059-3	2465-009-1	7286-128-3	6918-001-5	--	2" BLACK STEEL
8543-019-5	53-1/4	7286-060-3	2465-009-1	7286-128-3	6918-001-5	--	2" BLACK STEEL
8543-020-5	55-5/8	7286-061-3	2465-009-1	7286-128-3	6918-001-5	--	2" BLACK STEEL
8543-021-5	59-1/4	7286-062-3	2465-009-1	7286-128-3	6918-001-5	--	2" BLACK STEEL
8543-022-5	86-7/8	7286-067-3	2465-009-1	7286-128-3	6918-001-5	--	2" SST
8543-025-5	26-7/8	11376-008-3	2465-018-1	11376-007-1	6918-001-5	--	2" SST
8543-030-5	50-7/8	11376-013-3	2465-018-1	11376-007-1	6918-001-5	--	2" BLACK STEEL
8543-031-5	125-7/8	7286-155-3	2465-009-1	7286-128-1	6918-001-5	7405-002-1	2" GALV.
8543-040-5	26-7/8	7745-003-3	2465-009-1	7745-004-3	6918-001-5	7405-002-1	2" BLACK STEEL
8543-042-5	62-7/8	7286-034-3	2465-009-1	7286-128-3	6918-001-5	7405-002-1	

HYDROMATIC
AURORA/HYDROMATIC PUMPS, INC.

PIPING-DISCHARGE SPGH ASSEMBLY

DO NOT SCALE DRAWING

CHARTED

2" DISCHARGE PIPING WITH BALL CHECK VALVE ASSEMBLY WITH DIAPHRAGM SEAL WITH FLANGE

This is a combination ball check and hydraulic sealing diaphragm in a single housing. The assembly is mounted in a horizontal position in the pump discharge piping and is removed with the pump as a unit for inspection and service. On initial installation, the design clearance between the sealing diaphragm and the sealing flange is 1/16". When the pump starts, discharge water pressure expands the sealing diaphragm, effecting an hydraulic seal between the check valve assembly and the sealing flange. The neoprene ball is non clog, self cleaning, while the pump is running, and is shown in the drawing as a solid line. This allows full flow of the ground slurry.

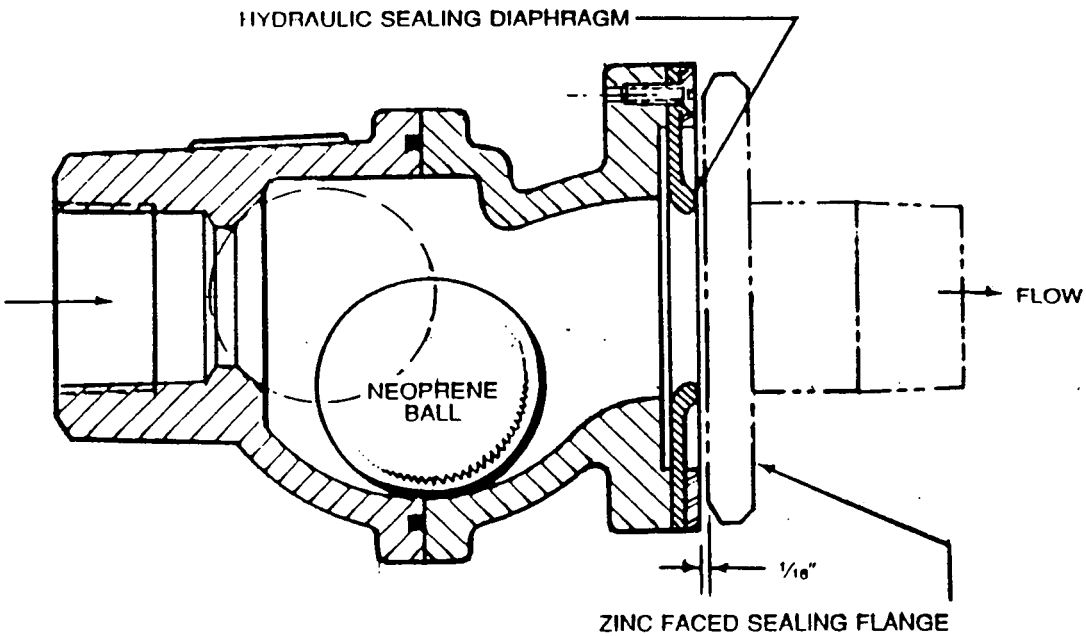

When the pump stops, the ball check valve will seat as shown in dotted lines, and seal down to a minimum discharge line back pressure of 1-2 psi.

When the pump stops and when the pump is not running the hydraulic sealing diaphragm will maintain contact with the sealing flange down to a minimum downstream line back pressure of 2-3 psi.

Below this pressure, and at negative discharge line pressures the sealing flange shall automatically release and act as an anti-syphon valve, venting the downstream discharge line to atmosphere.

Anti-syphoning is important with grinder pump installations as it prevents an accumulation of solids in the tank. Should this occur there is a much higher possibility of the pump clogging when the pump finally turns on.

HYDROMATIC

AURORA / HYDROMATIC PUMPS, INC.

HYDROMATIC CHECK VALVE ASSEMBLY

000146

8543-007-5

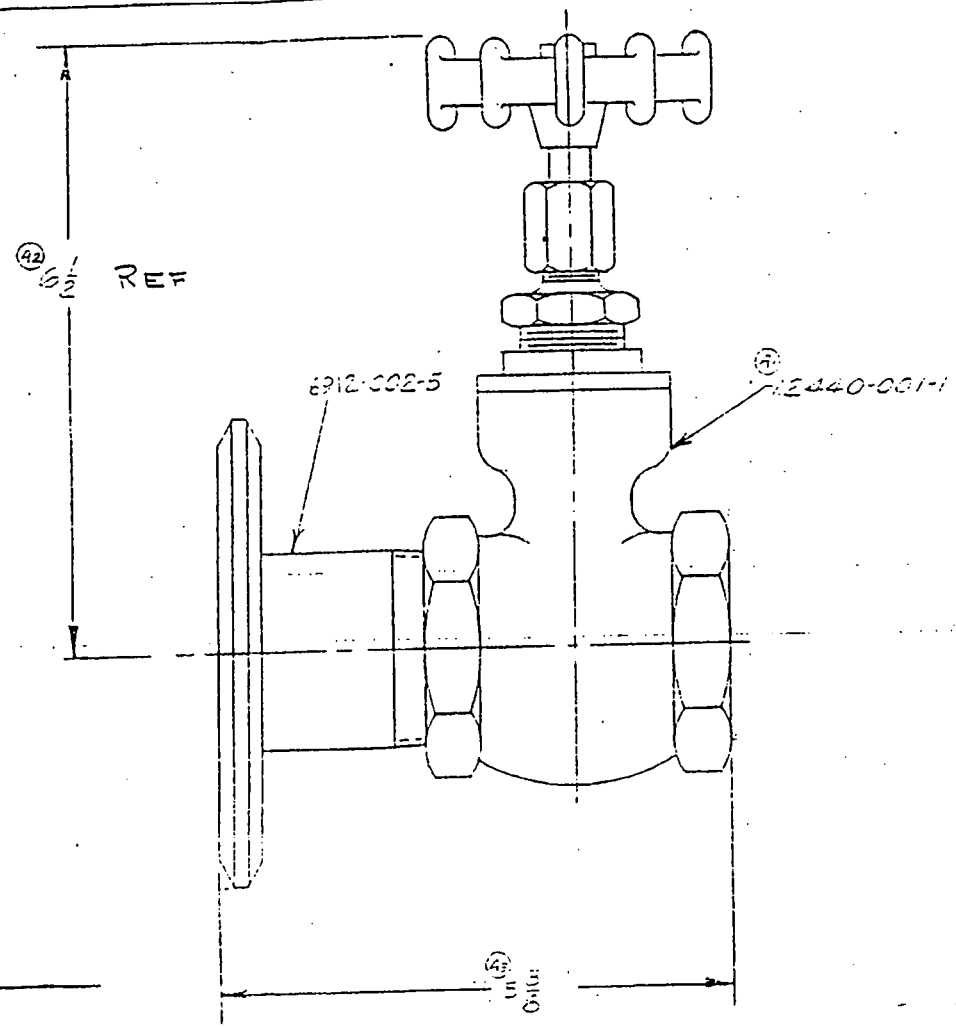

FOR CONCRETE SUMP

REVISIONS		
	NEW DWG PER. 38A	3-18-85
A1	12440-001-1 WAS 20.89-1	
A2	6 1/8 DIM WAS 7 9/16	
A3	5 3/8 " 5 9/16	
	ECN 7512	

Tolerances On Finished Fractional Dimensions
Up to 12" ± 1/64"
12" & Above ± 1/32"
Angles ± 1/2°

MATERIAL

TITLE: BRONZE GATE VALVE ASSY - 2

SCALE	DATE	DRAWN	CHECKED	PART NO
—	7-12-77	R.S.		8543-007-5

→ 2" GATE VA[illegible] WITH STATIONARY SEALING FLANGE

Installation SPG-G1X

BASIN & COVER IS NOT INCLUDED

SIMPLEX FIBERGLASS INSTALLATION WITH REMOTE MOUNTED PANEL

PUMP BASEPLATE MOUNTING DIMENSIONS

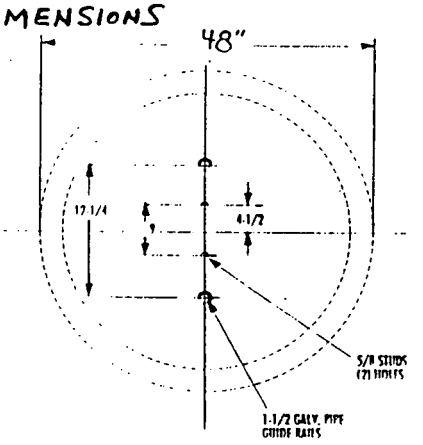

NOTE: BASIN & COVER IS NOT INCLUDED

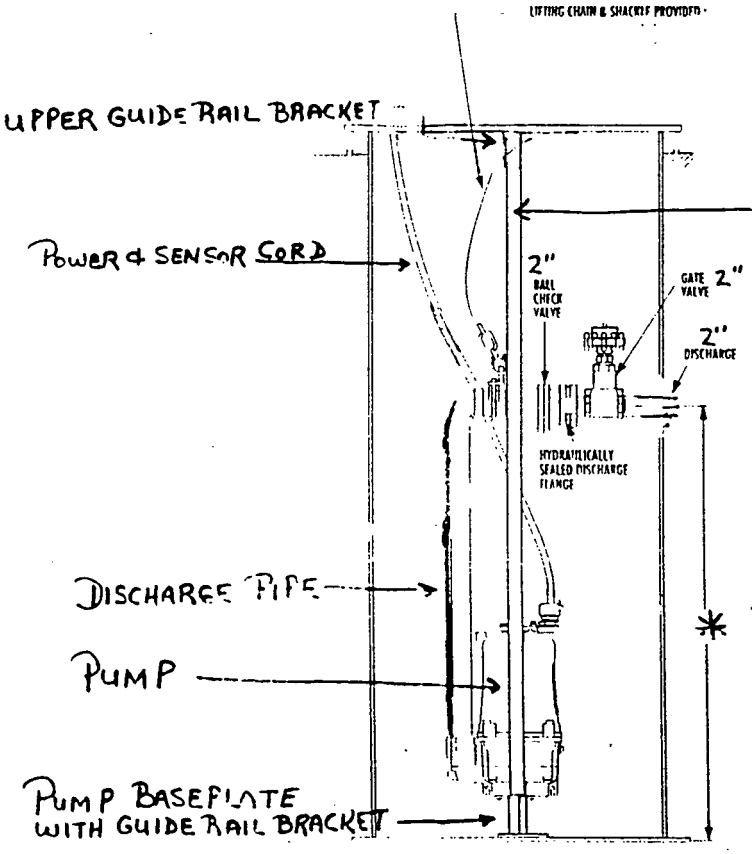

* PLEASE SPECIFY DISCHARGE CENTER LINE FOR BOTH THE EAST & WEST STATIONS.

ALL DIMENSIONS IN INCHES

7734-18

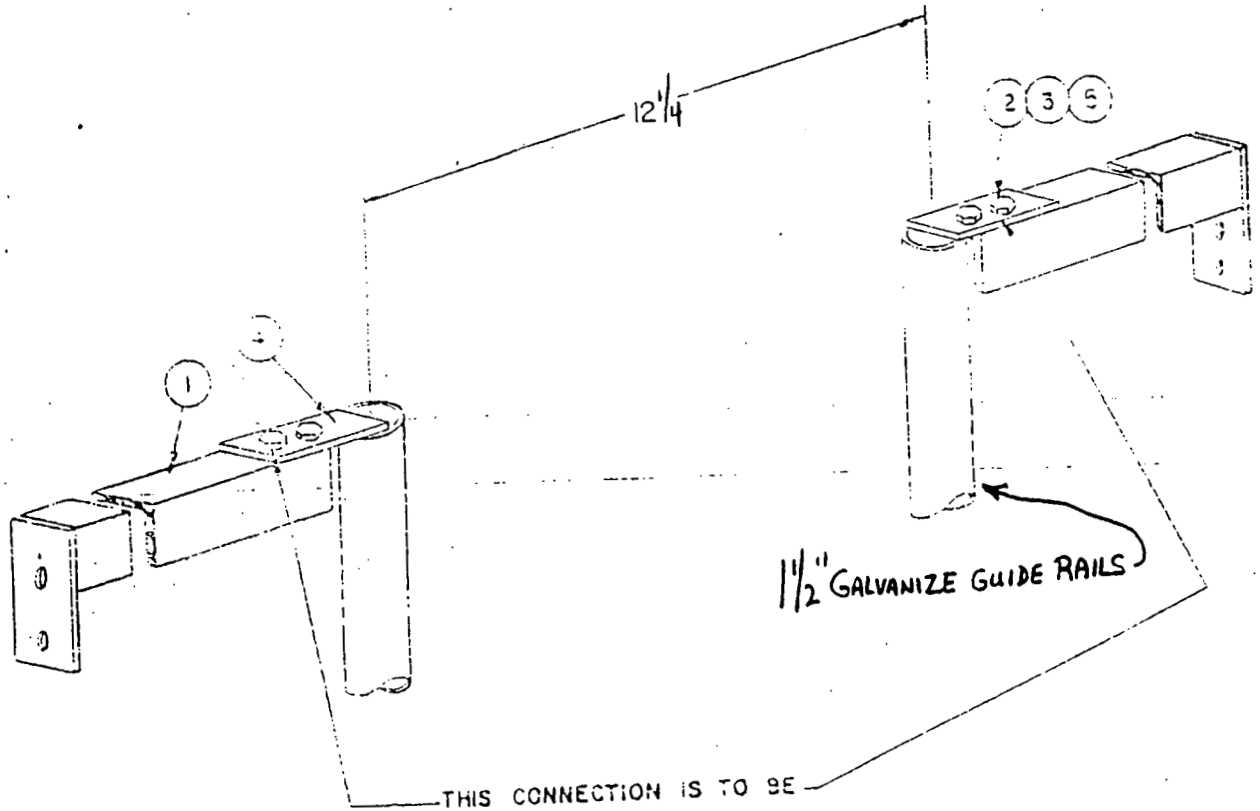

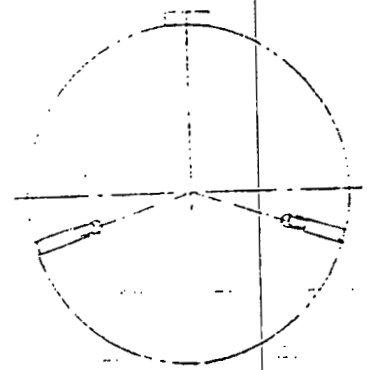

PLAN VIEW OF SUMP SHOWING ARRANGEMENT OF BRACES

USED ON 1½ GUIDE RAIL HYDR-O-GRIND SYSTEM

ISSUE
ENGINEERING
MACH. SHOP
TOOLING
QUAL. CONT.
PLANT 2

TOLERANCES	
UP TO 12"	± 1/64
12" & ABOVE	± 1/32
ANGLES	± 1/2°
MATERIAL	

HYDR-O-MATIC PUMP CO.
HAYESVILLE, OHIO

TOP RAIL GUIDE BRACE ASSEMBLY

DRAWN	DATE	CHECKED	SCALE
L.S.R	7-27-76		NONE

7734-18

REVISIONS	
ECN 2757	
NEW DWG	

UPPER GUIDE RAIL BRACKET

1½" GALVANIZED GUIDE RAILS TO BE FIELD CUT TO BASIN DEPTH.

000148

Installation SPGH

DISCHARGE PIPING AND RAIL GUIDE ASSEMBLY

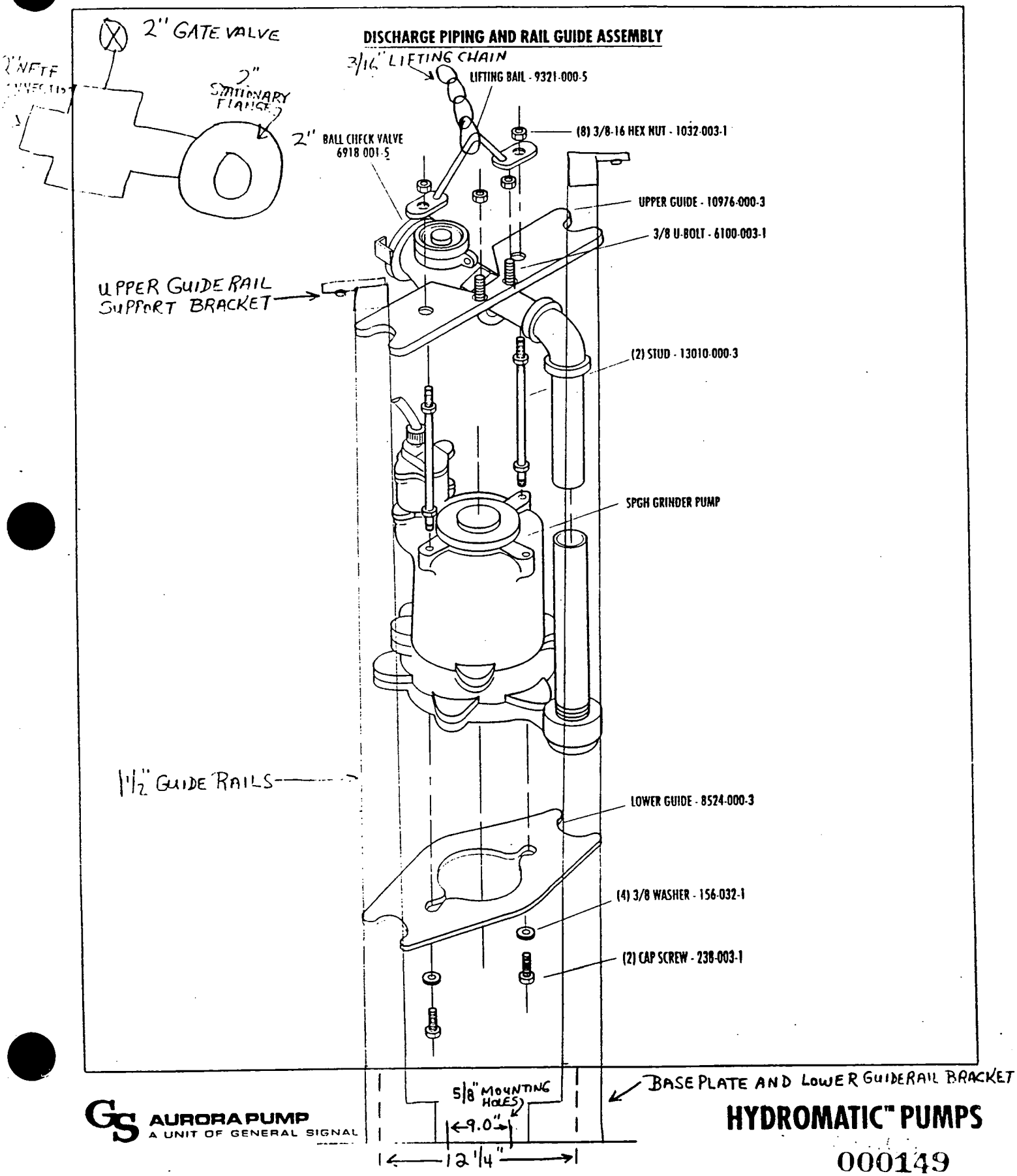

000150

DRAWING NUMBER 8583-000-5

ITEM	DRAWING NO.	PART NO.	ASSEMBLY NO. 8583-000-5 (C) HRS	ASSEMBLY NO. 8583-001-5 (C) HRS	ASSEMBLY NO. 8583-004-5 (C) SST	ASSEMBLY NO. 8583-005-5 (C) SST
1	8583-000-5	SEE CHART	6697-027-3 (2)	6697-027-3 (2)	11917-005-3 (2)	11917-005-3 (2)
2	8583-000-5	SEE CHART	6691-041-3	6691-042-3	11917-006-3	11917-007-3

ASSEMBLY NO.	DIM "A"	DIM "B"	DEVELOPMENT SIZE (H)	DISTANCE BETWEEN RAILS (M)
8583-000-5	12-1/4	1-5/8	3 X 21-1/2	12
8583-001-5	16-1/2	3-5/8	3 X 25-3/4	16-1/4
8583-004-5	12-1/4	1-5/8	3 X 21-1/2	12
8583-005-5	16-1/2	3-5/8	3 X 25-3/4	16-1/4

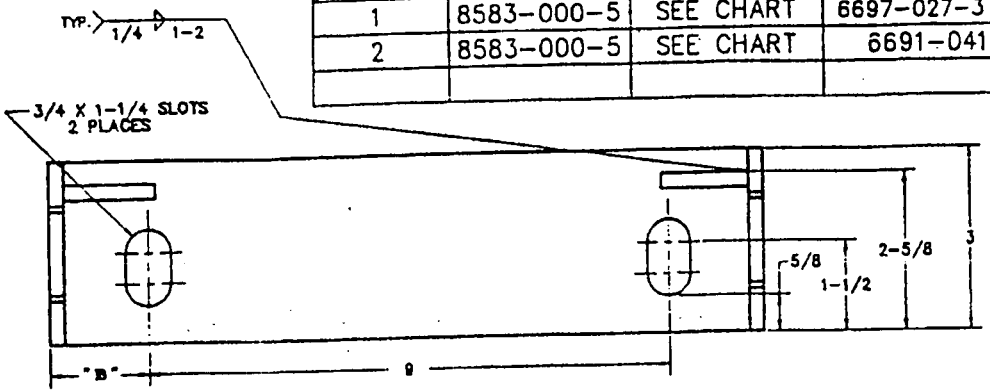

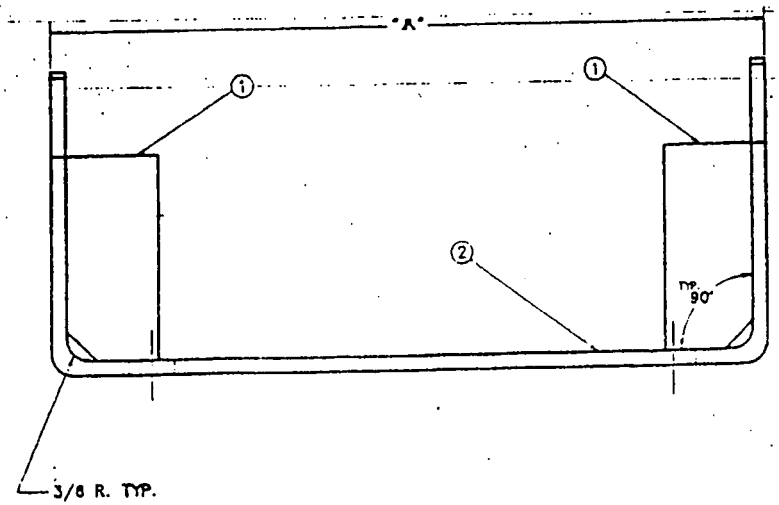

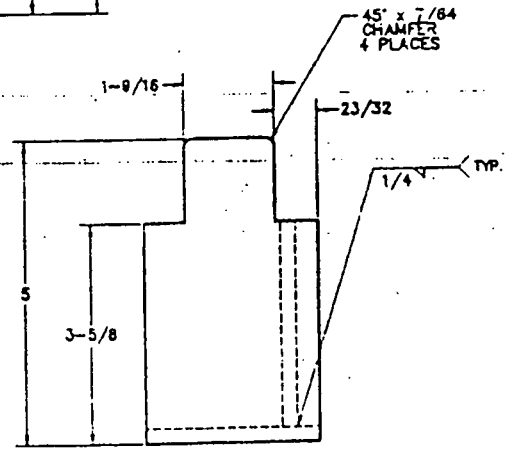

REV.	LOG NO.	DATE	REVISION DESCRIPTION	BY
C	94602	9-26-94	RWVD DETAIL DWG. ADD P/N'S FOR HRS & SST	PBW
B	94207	4-8-94	<1>ADDED. REVISED DWG.	PBW
A	921081	11-17-92	REDRAWN TO CAD	WRW

UNLESS OTHERWISE SPECIFIED: DIMENSIONS ARE IN INCHES

• DECIMAL •
2 PLACE .XX ± .010"
3 PLACE .XXX ± .005"
ANGLES ± 0° 30'
FINISH = 125 RMS

• FRACTIONAL •
UP TO 12" ± 1/32"
12" & UP ± 1/16"
ANGLES ± 2°

DO NOT SCALE DRAWING

PLOT SCALE 1-2

MATERIAL: ----

HYDROMATIC
AURORA / HYDROMATIC PUMPS, INC.

COMPANY CONFIDENTIAL: INFORMATION CONTAINED HEREIN IS CONFIDENTIAL. IT IS THE PROPERTY OF GENERAL SIGNAL CORPORATION. IT IS TO BE USED SOLELY FOR THE PURPOSE REQUIRED, AND IT IS NOT TO BE DISCLOSED TO OTHERS WITHOUT THE PRIOR WRITTEN CONSENT OF GENERAL SIGNAL CORPORATION.

PLATE-BASE-ASSEMBLY
1-1/2 RAILS

DRAWN BY	DATE	CHECKED BY	SHEET 1 OF 1
WRW	11-17-92		

PART NUMBER	SIZE	DRAWING NUMBER	REV
SEE CHART	B	8583-000-5	C

→ PUMP BASEPLATE WITH LOWER GUIDE RAIL SUPPORT.

TOP VIEW

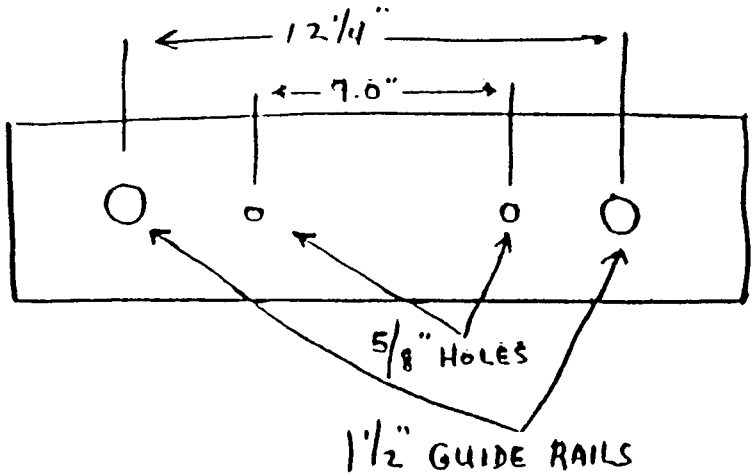

SIDE VIEW

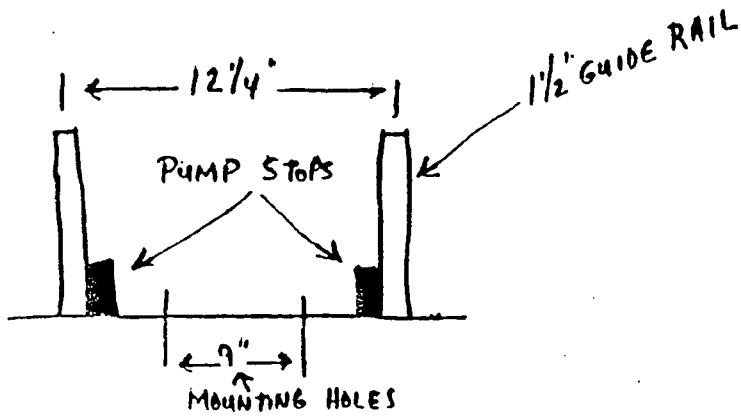

BOTTOM BASE AND
GUIDE RAIL SUPPORT

CAST IRON SPGH AND SPGF SUBMERSIBLE SEWAGE GRINDER PUMPS

1.01 GENERAL

A. Contractor shall furnish all labor, materials, equipment and incidentals required to provide 3 (Qty.) submersible centrifugal ~~explosion proof~~ sewage grinder pump(s) as specified herein.

2.01 OPERATION CONDITIONS

A. Each pump shall be rated 7 1/2 H.P., 460 volts, 3 phase, 60 hertz, 3500 R.P.M. The unit shall produce 25 U.S. GPM at 180 feet TDH. TWO UNITS.
160 FEET T.D.H. ONE UNIT.

3.01 CONSTRUCTION

A. Each pump shall be of the sealed submersible type, Model SPGH750M4-4 as manufactured by Aurora/Hydromatic Pumps, Inc. The pump volute, motor and seal housing shall be high quality gray cast iron, ASTM A-48, Class 30. All external mating parts shall be machined and Buna N Rubber O-ring sealed on a beveled edge. Gaskets shall not be acceptable. All fasteners exposed to the pumped liquids shall be 300 series stainless steel.

3.02 ELECTRICAL POWER CORD

A. Electrical power cord shall be water resistant 600V, 60°C., UL and/or CSA approved and applied dependent on amp draw for size.

B. The power cable entry into the cord cap assembly shall first be made with a compression fitting. Each individual lead shall be stripped down to bare wire, at staggered intervals, and each strand shall be individually separated. This area of the cord cap shall then be fitted with an epoxy compound potting which will prevent water contamination to gain entry even in the event of wicking or capillary attraction.

C. The power cord leads shall then be connected to the motor leads with extra heavy connectors having brass inserts with a screwed wire to wire connection.

D. On the 3, 5, and 7½ horsepower series pumps, there shall be an additional epoxy compound potting area separating the motor housing from the cord cap assembly.

E. The Cord cap assembly where bolted to the connection box assembly shall be sealed with a Buna N Rubber O-ring on a beveled edge to assure proper sealing.

3.03 MOTOR

A. The stator, rotor and bearings shall be mounted in a sealed submersible type housing. The stator windings shall have Class F insulation, (155°C. or 311°F.), and a dielectric oil filled motor, NEMA B design (3 phase), NEMA L design (single phase).

B. The pump and motor shall be specifically designed so that they may be operated partially dry or completely submerged in the liquid being pumped.

C. Stators shall be securely held in place with a removable end ring and threaded fasteners so they may be easily removed in the field, and must be capable of being repaired or rewound by a local motor service station. No special tools shall be required for pump and motor disassembly.

D. Pump shall be equipped with heat sensors. The heat sensor(s) (one on single phase, two on three phase) shall be a low resistance, bi- metal disc that is temperature sensitive. It (they) shall be mounted directly in the stator and sized to open at 120°C. or 130°C. and automatically reset at 30–35°C. differential. The sensor shall be connected in series with the motor starter coil so that the starter is tripped if a heat sensor opens. The motor starter shall be equipped with overload heaters so all normal overloads are protected by external heater block.

000152

3.04 **BEARINGS AND SHAFT**

A. An upper radial bearing and a lower thrust bearing shall be required. These shall be permanently lubricated by the dielectric oil which fills the motor housing.

B. The shaft shall be machined from a solid 416 stainless steel and be a design which is of large diameter with minimum overhand to reduce shaft deflection and prolong bearing life.

3.05 **SEALS AND SENSORS**

A. The rotor and stator in the motor housing shall be separated and protected from the pumped liquid by an oil filled seal housing incorporating two type 21 carbon ceramic mechanical seals mounted in tandem. This seal housing shall be equipped with 2 moisture sensing probes installed between the seals, and the sensing of moisture in the seal chamber shall be automatic, continuous, and not require the pump be stopped or removed from the wet well.

3.06 **IMPELLERS**

A. Impeller shall be bronze multi vane, semi-open, non-overloading design. They can ~~either~~ be factory ~~or field~~ trimmed to meet specific performance conditions. Impellers shall be hydraulically and statically balanced at the factory, and machined for threading on to the pump shaft. Wear or field trimming shall not deter the factory balance.

3.07 **GRINDER CUTTERS**

A. The combination centrifugal pump impeller and grinder unit shall be attached to the common motor and pump shaft made of 416 stainless steel. The grinder unit shall be on the suction side of the pump impeller and discharge directly into the impeller inlet leaving no exposed shaft to permit packing of ground solids. The grinder shall consist of two stages. The cutting action of the second stage shall be perpendicular to the plane of the first cut for better control of the particle size. The grinder shall be capable of grinding all materials found in normal domestic sewage, including plastics, rubber, sanitary napkins, disposable diapers, and wooden articles into a finely ground slurry with particle dimensions no greater than ¼ inch. Both stationary and rotating cutters shall be made of 440C stainless steel hardened to Rockwell 60C and ground to close tolerance.

B. The upper (axial) cutter and stationary cutter ring shall be reversible to provide new cutting edges to double life. The stationary cutter ring shall be a slip fit into the suction opening of the volute and held in place by three (3) 300 series stainless steel screws and a retaining ring. The lower (radial) cutter shall macerate the solids against the I.D. of the cutter ring and extrude them through the slots of the cutter ring. The upper (axial) cutter shall cut off the extrusions, as they emerge from the slots of the cutter ring to eliminate any roping effect which may occur in single stage cutting action. The upper (axial) cutter shall fit over the hub of the impeller and the lower (radial) cutter shall be slip fit and secured by means of peg and hole and rotate simultaneously with the rotation of the shaft and impeller. The grinding mechanism shall be locked to the shaft by a 300 series stainless steel countersunk washer in conjunction with a 300 series stainless steel flat head cap screw threaded into the end of the shaft.

3.08 **PAINTING**

A. The pump shall be painted after assembly, but before testing, with a lead free air dried enamel. The paint shall be applied in one coat, with a minimum mil thickness of 3 to 4 mils.

4.01 **TESTING**

A. Commercial testing shall be required and include the following:

1. The pump shall be visually inspected to confirm that it is built in accordance with the specification as to HP, voltage, phase and hertz.

2. The motor and seal housing chambers shall be hi-potted to test for moisture content and/or insulation defects.
3. Pump shall be allowed to run dry to check for proper rotation.
4. Discharge piping shall be attached, the pump submerged in water and amp readings shall be taken in each leg to check for an imbalanced stator winding. If there is a significant difference in readings, the stator windings shall be checked with a bridge to determine if an unbalanced resistance exists. If so, the stator will be replaced.

5.01 WARRANTY

A. The pump unit or any part thereof shall be warranted against defects in material or workmanship within one year from date of installation or 18 months from date of manufacture, whichever comes first, and shall be replaced at no charge with a new or re manufactured part, F.O.B. factory or authorized warranty service station. The warranty shall not assume responsibility for removal, reinstallation or freight, nor shall it assume responsibility of incidental damages resulting from the failure of the pump to perform. The warranty shall not apply to damage resulting from accident, alteration, design, misuse or abuse.

PANEL SHOWN — - - - - - WITH SEAL FAILURE LIGHT

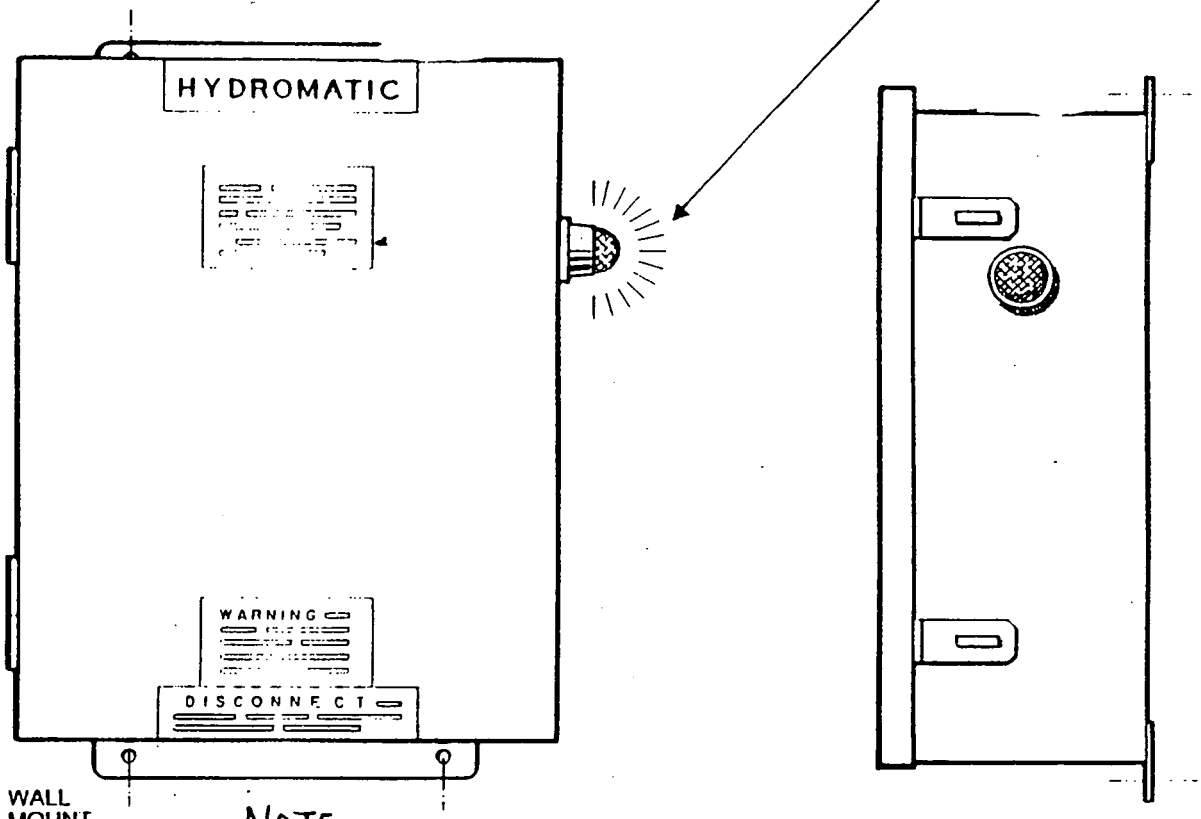

NOTE → APPROXIMATE PANEL DIMENSIONS

WIDTH 30" HEIGHT 24" DEPTH 8"

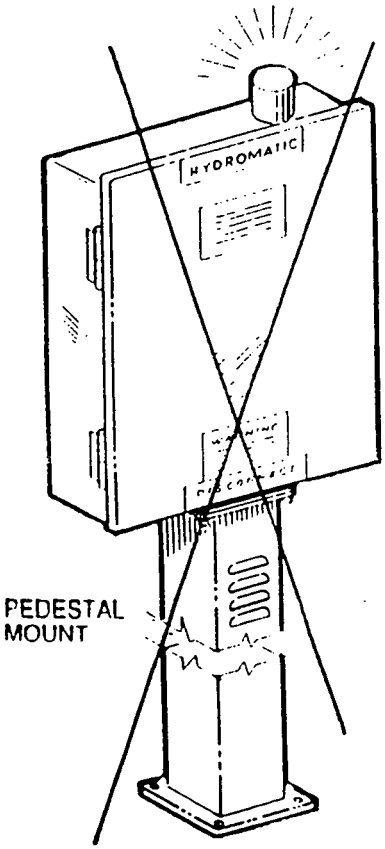

TYPE AND MOUNTING

- [x] SIMPLEX
- [ ] DUPLEX
- [ ] PEDESTAL
- [x] WALL

PANEL DATA

VOLTAGE 460 PHASE 3 HERTZ 60

HORSEPOWER 7 1/2

FULL LOAD AMPS 10.8

WIRING SCHEMATIC – WS 50523

EXTRAS SPECIAL CONDUCTIVITY LEVEL RELAYS AND A SEAL FAILURE ALARM LIGHT AND A OVERFLOW SHUT DOWN CIRCUIT AND LIGHT.

FOR:

PUMP MODEL SPGH 750 M4-4

STATION NO. EAST & WEST

HYDROMATIC

AURORA / HYDROMATIC PUMPS, INC.

NEMA 3R CONTROL PANEL

460 VOLTS, THREE PHASE, SIMPLEX

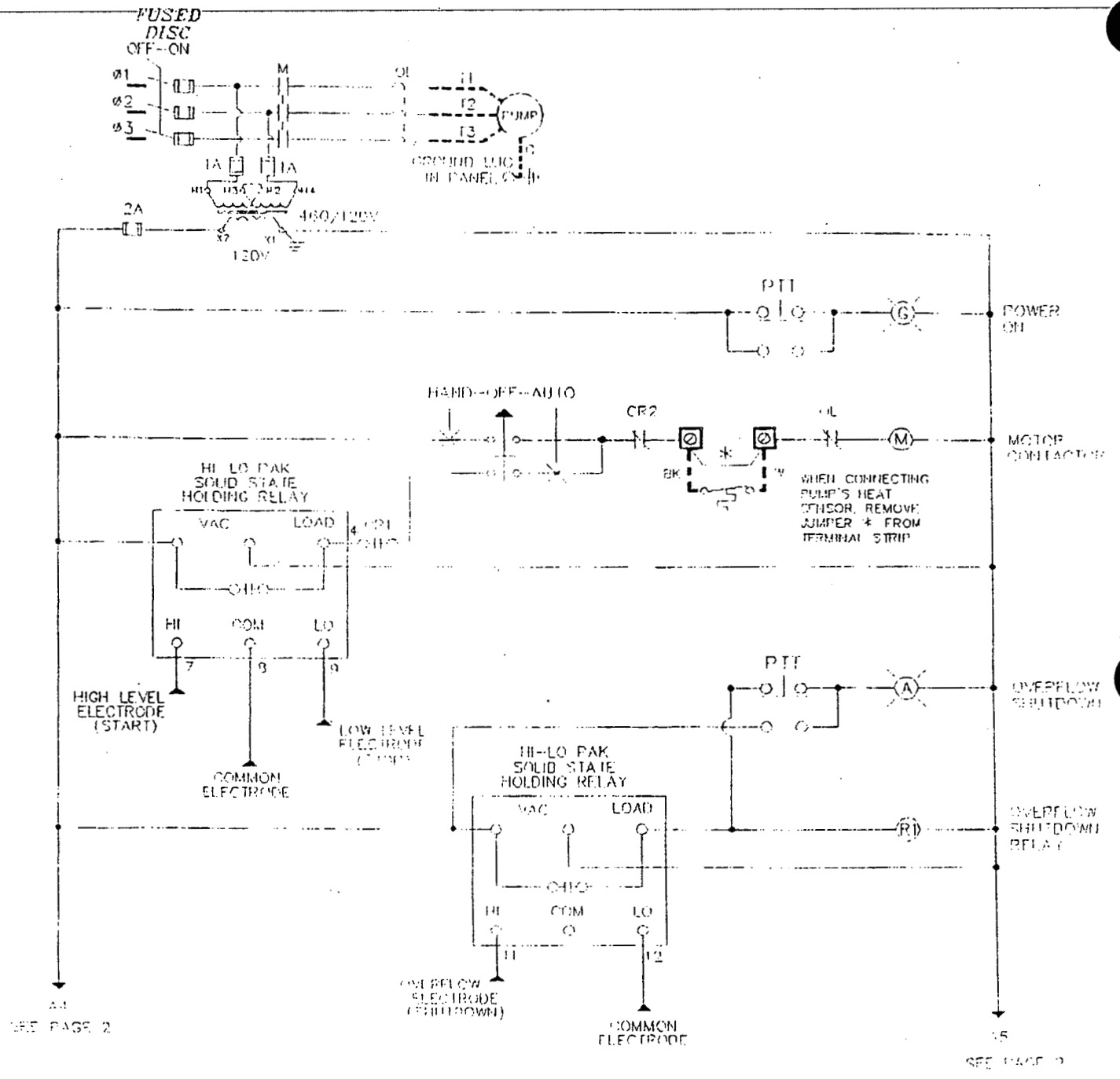

BASE TYPE AA3 NOTE: USE COPPER, 60°C WIRE INSULATION FOR ALL FIELD WIRING TERMINALS

MODEL NO. 10,80—AA3—AD2

HYDROMATIC AURORA/HYDROMATIC PUMPS, INC.	ELECTRICAL SCHEMATIC/ DIAGRAM	PANEL PART NO. SUB 50523 DATE: 05-24-1995 PAGE 1 OF 2

NOTE

WARNING: DISCONNECT POWER BEFORE SERVICING !

IMPORTANT: METAL BACK PANEL TO BE CONNECTED TO A GOOD GROUND IN ACCORDANCE WITH LOCAL ELECTRICAL CODES

——→ SYMBOLS FOR CONTINUATION OF WIRING WITHIN THIS SCHEMATIC ←——

000156

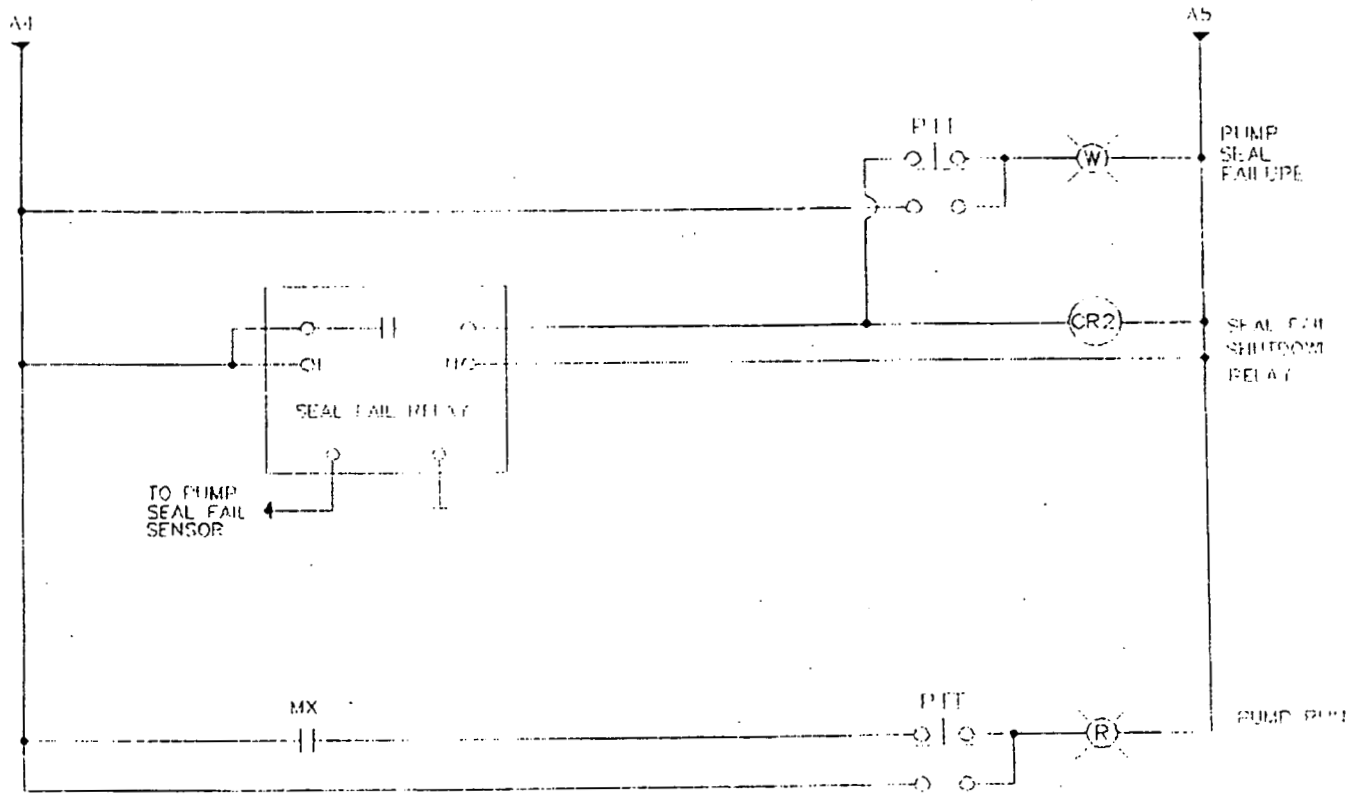

BASE TYPE AA3 NOTE: USE COPPER, 60°C WIRE INSULATION FOR ALL FIELD WIRING TERMINALS

MODEL NO. 10.8D-AA3--AD2

HYDROMATIC AURORA/HYDROMATIC PUMPS, INC.	ELECTRICAL SCHEMATIC/ DIAGRAM	PANEL PART NO. SUB 50523 DATE: 05-24-1995 PAGE 2 OF 2

WARNING: DISCONNECT POWER BEFORE SERVICING !

IMPORTANT: METAL BACK PANEL TO BE CONNECTED TO A GOOD GROUND IN ACCORDANCE WITH LOCAL ELECTRICAL CODES

——▶ SYMBOLS FOR CONTINUATION OF WIRING WITHIN THIS SCHEMATIC ▶ ——

NOTE

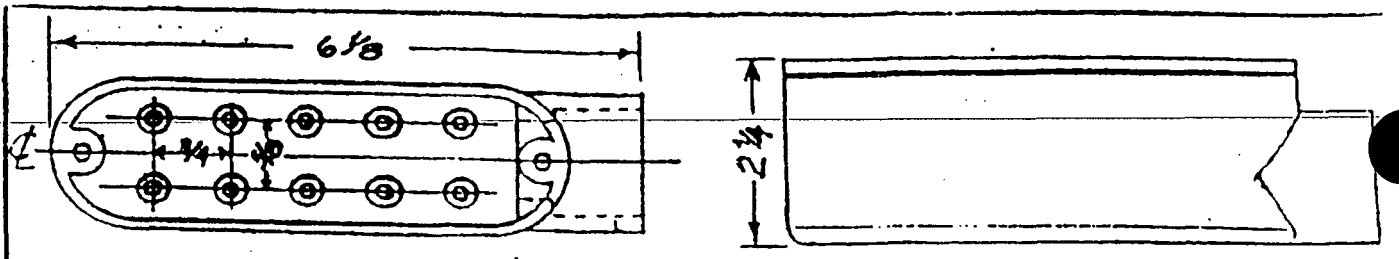

1" CONDUIT – UP TO 10 ELECTRODES

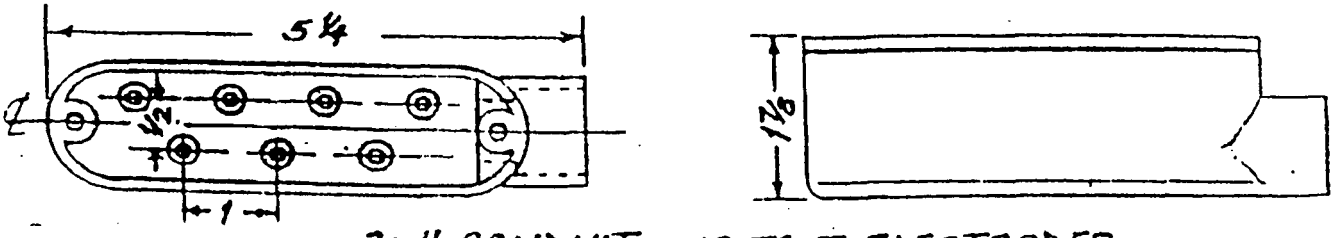

3/4" CONDUIT – UP TO 7 ELECTRODES

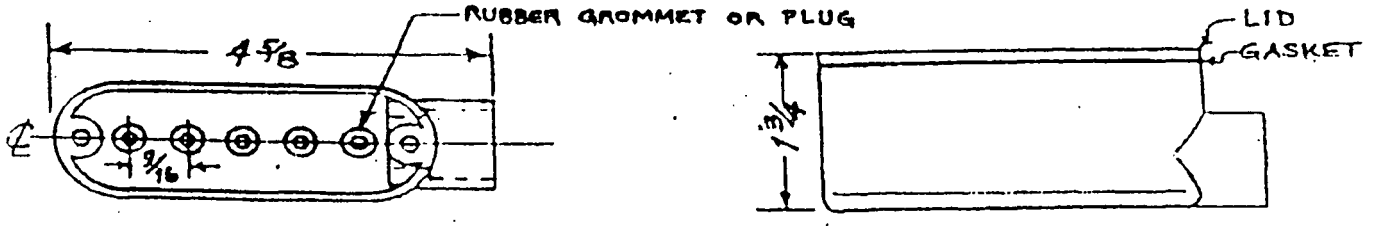

1/2" CONDUIT – UP TO 5 ELECTRODES

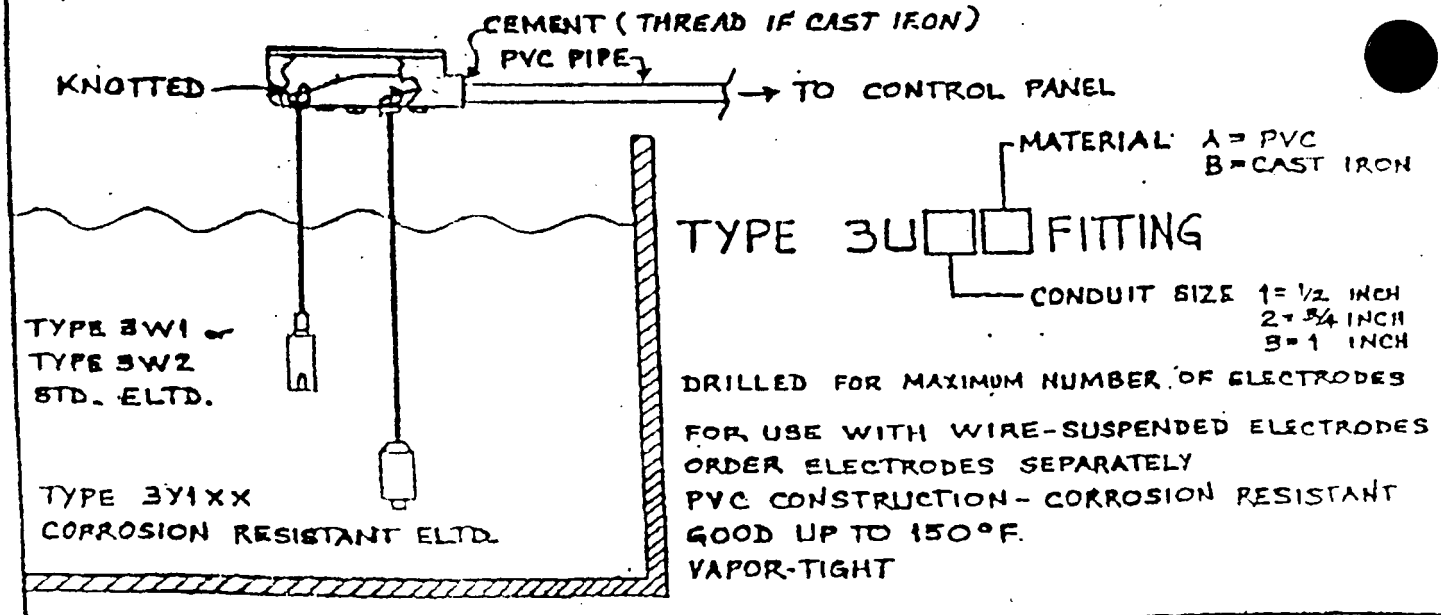

DRILLED FOR MAXIMUM NUMBER OF ELECTRODES

FOR USE WITH WIRE-SUSPENDED ELECTRODES
ORDER ELECTRODES SEPARATELY
PVC CONSTRUCTION – CORROSION RESISTANT
GOOD UP TO 150°F.
VAPOR-TIGHT

A. C. LINE:	SCALE: NONE	TITLE: TYPE 3UXX. ELECTRODE FITTING FOR WIRE-SUSPENDED ELECTRODES
DATE: 14 DEC 1983	DRWN BY: TRS	
SHEET NO: 1	CHKD BY:	
CHARLES F. WARRICK COMPANY 1964 W. ELEVEN MILE RD., BERKLEY, MICH.		DRWG NO: B4855DA

FORM NO. [illegible]

000158

→ ELECTRODES

ATTN: TED TURK 7412

FROM: DICK WIEDLUND
216-831-9393
5/5/95

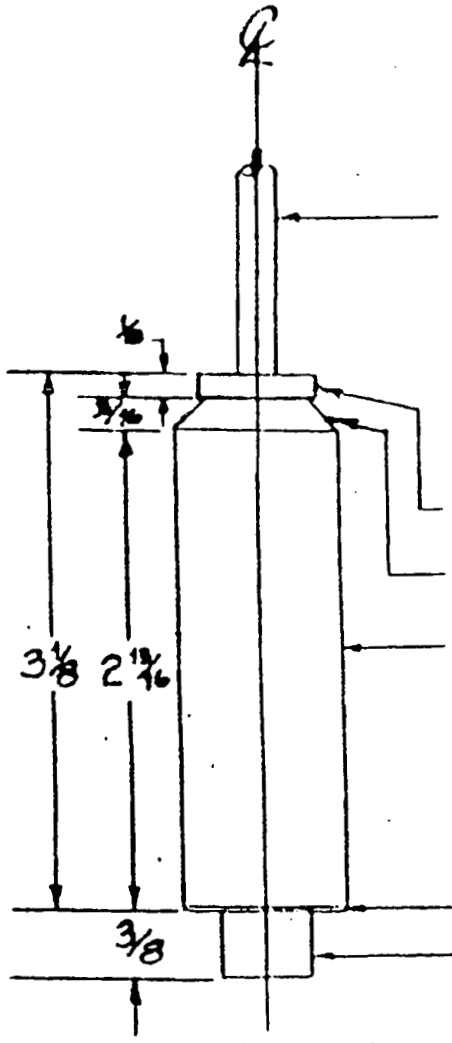

SIDE VIEW

SUSPENSION WIRE, SINGLE CONDUCTOR, 41 STRAND, NO. 18 AWG, 4/64" PVC INSULATION, 600V, 75°C, TYPE 3Z1A. ATTACHED IN MULTIPLES OF 10 FT. LENGTHS
1-10 FEET
2-20 FEET
3-30 FEET
— ETC. —

BUSHING, PVC, 5/8" DIA., CEMENTED TO BODY

1/4" 45° CHAMFER

BODY/SHIELD, PVC, GRAY
GOOD TO 140°F AT 0 PSIG

1/32" 45° CHAMFER

ELECTRODE TIP
C-316 S.S.
D-CARPENTER 20
E-HASTELLOY B
F-HASTELLOY C
H-TITANIUM (7/13/10)

45° CHAMFER, 1/16"

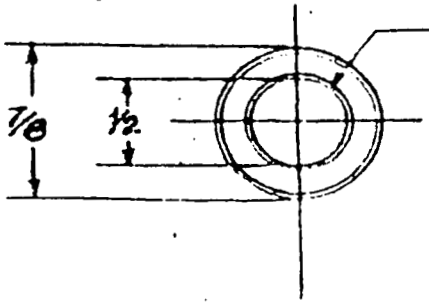

BOTTOM VIEW

MODEL 3Y1☐☐ ELECTRODE
WIRE LENGTH
1,2,3, ETC.
ELECTRODE TIP
C,D,E, OR F

A. C. LINE:	SCALE: FULL	TITLE: MODEL 3Y1☐☐ ELECTRODE CORROSION-RESISTANT ELECTRODE WIRE SUSPENDED TYPE DIMENSION DIAGRAM
DATE: 12 JAN 82	DRWN BY: TKS	
SHEET NO: 1	CHKD BY: JES	
CHARLES F. WARRICK COMPANY 1964 W. ELEVEN MILE RD., BERKLEY, MICH.		DRWG NO: B5080DB

→ ELECTRODES

APPENDIX C

BAILEY FISCHER & PORTER DATA

ATTACHMENT C1

EQUIPMENT SPECIFICATION SHEET

FISCHER & PORTER

FISCHER & PORTER COMPANY
WARMINSTER, PA 18974 U.S.A.

7412

EQUIPMENT SPECIFICATION SHEET

SALES ORDER NO.	REVSN	ORDER DATE	PRINTED ON	FREIGHT TERMS	PAGE
149731	0	05/04/95	05/05/95	PRE PAID & ADD (SP)	1

METHOD OF SHIPMENT	PAYMENT TERMS
U.P.S.	NET 30 DAYS

CUSTOMER PURCHASE ORDER NUMBER	CONTRACT NUMBER
54931	THERESE/CHGO

BILL TO

CKM INDUSTRIAL SALES, INC.
1163 FEHL LN

CINCINNATI, OH 45230
*

SHIP TO

USDOE C/O FERMCO
7400 WILLEY RD.
REF PO 95CP003556

FERNALD, OH
USA 45030

BILL TO CUSTOMER CKM45230

SHIP TO CUSTOMER CKM45230 1

LINE	PRODUCT NUMBER / PRODUCT DESCRIPTION	SCHEDULED SHIP DATE	QUANTITY	UOM	CUSTOMER-SUPPLIED INFORMATION / APPROVAL COMMENTS
1	10D1475 MINI MAG LINER MATERIAL: TEFZEL (ETFE) METER SIZE: 50MM (2") FLANGE RATING: ANSI CLASS 150 ELECTRODE MATL: ZIRCONIUM SAFETY CLASS.: FM APPROVED NON-INC CL I,DIV 2 GP A,B,C, & D POWER REQ'D.: INTEGRAL 115/120 V, 50/60 HZ ENCLOSURE CLASS: NEMA 4X, IEC 529 IP 65 FLUID TEMP RANG: TO 65 DEG C (149 DEG F) OUTPUT CURRENT: 4-20 MA DC OUTPUT OPTIONS: NO SCALED OUTPUT REQUIRED COMMUN. MODE: NOT APPLICABLE COIL DRIVE FREQ: 7 1/2 HZ (60 HZ LINE FREQ.) OPTIONS: EMPTY PIPE DETECTOR MTG. HDW. KIT: STD KIT WITH KLINGER SIL GSKT CONVERTER: REQUIRED SIZING DATA: FLOW DISPLAY DIRECT READING		1.	EA	

000162

FISCHER & PORTER

FISCHER & PORTER COMPANY
WARMINSTER, PA 18974 U.S.A.

EQUIPMENT SPECIFICATION SHEET

SALES ORDER NO.	RVSN	ORDER DATE	PRINTED ON	FREIGHT TERMS	PAGE
149731	0	05/04/95	05/05/95	PRE PAID & ADD (SP)	2

METHOD OF SHIPMENT	PAYMENT TERMS
U.P.S.	NET 30 DAYS

CUSTOMER PURCHASE ORDER NUMBER	CONTRACT NUMBER
54931	THERESE/CHGO

BILL TO

CKM INDUSTRIAL SALES, INC.
1163 FEHL LN

CINCINNATI, OH 45230
*

SHIP TO

USDOE C/O FERMCO
7400 WILLEY RD.
REF PO 95CP003556

FERNALD, OH
USA 45030

BILL TO CUSTOMER CKM45230

SHIP TO CUSTOMER CKM45230 1

LINE	PRODUCT NUMBER / PRODUCT DESCRIPTION	SCHEDULED SHIP DATE	QUANTITY	UOM	CUSTOMER-SUPPLIED INFORMATION-APPROVAL COMMENTS
1	CUST MAX FLOW 80.000 Gallons - (US) Per Min METER MAXIMUM 300.000 UNITS Gallons - (US) Per Min CALIBRATION 0.5% OF RATE SECONDARY REF: N/R FLOW DIRECTION: UNIDIRECTIONAL O.D. DWG: OD-10D-4061 I.D. DWG.: ID-50-1794 INSTR BULLETIN: 694A079U01 INSTR BULLETIN: 694A039U01				

000163

Certified Correct
For: Fermco
Customer Order No. 54931
P.O. # 95CP003556
Bailey-Fischer & Porter Co. Serial No. 149731
Line 1
By: Sharon Baker
Date: 7 June 1995

REV	AUTHORITY	REVISION DESCRIPTION	DWN BY	CHKD BY	APVD BY
1	RWO63099	ADDED F/LCD INDICATION TO TITLE BLOCK	4 NOV 88		

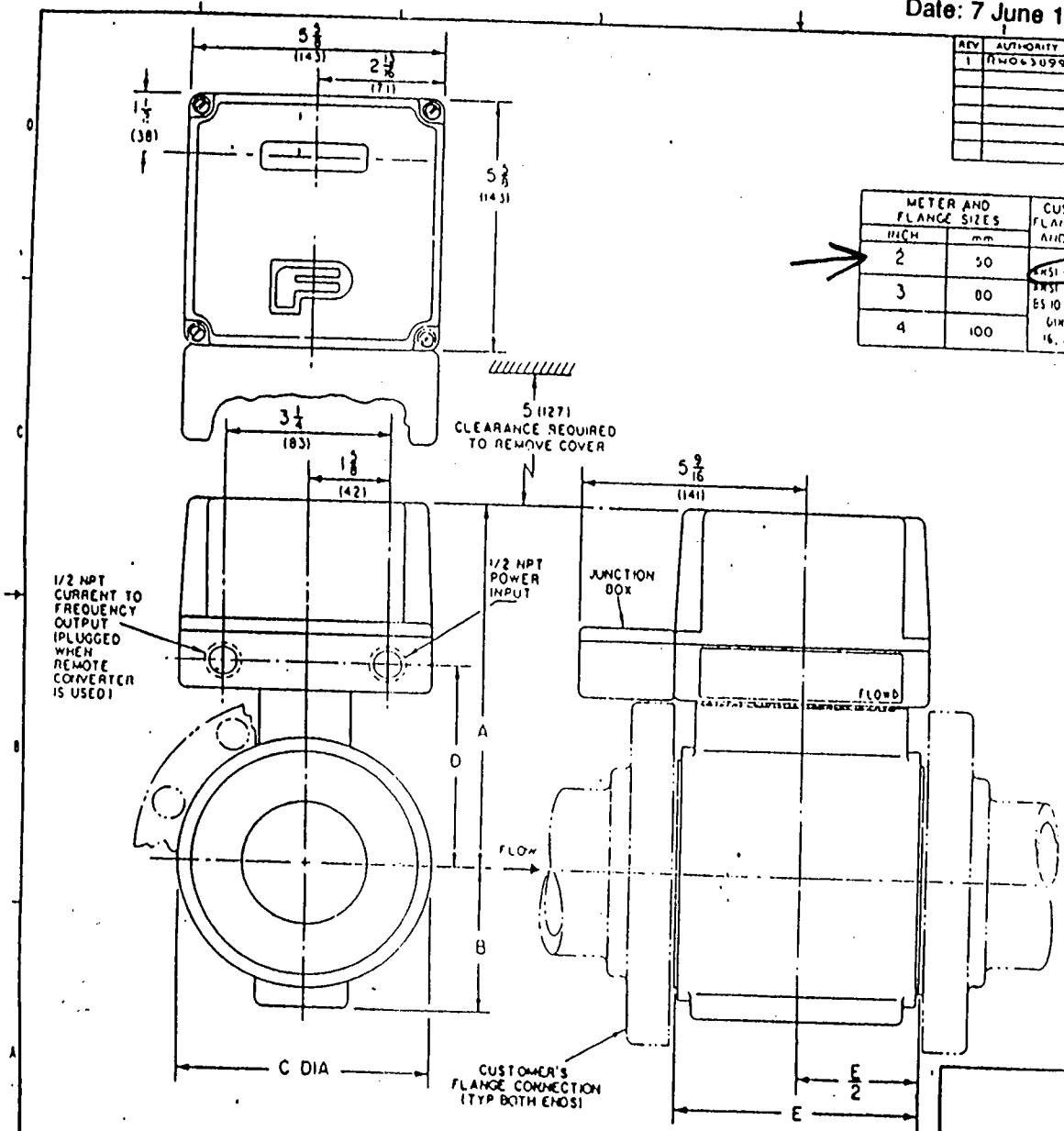

METER AND FLANGE SIZES INCH	mm	CUSTOMER FLANGE TYPE AND RATING	A INCH	A mm	B INCH	B mm	C DIA INCH	C DIA mm	D INCH	D mm	E INCH	E mm
2	50	ANSI CLASS 150	8 1/4	210	2 7/16	62	3 1/8	98	4 3/16	110	3 11/32	85
3	80	ANSI CLASS 300 BS 10 TBL D,E,F DIN PN 10, 16, 25 & 40	8 15/16	227	3 3/16	81	5 1/8	130	4 31/32	126	4 23/32	120
4	100		9 1/8	244	3 11/16	94	6 3/8	162	5 11/16	144	5 29/32	150

NOTES:

1. DIMENSIONS ARE IN INCHES, DIMENSIONS IN PARENTHESES ( ) ARE IN MILLIMETERS.
2. DIMENSIONS GUARANTEED ONLY IF THIS PRINT IS CERTIFIED.
3. ALL DIMENSIONS SUBJECT TO MANUFACTURING TOLERANCE OF ± 1/8 INCH (3mm).
4. METER MUST BE COMPLETELY FILLED WITH LIQUID TO INSURE ACCURACY.
5. FLOW MUST BE IN SAME DIRECTION AS FLOW ARROW. 1/2 NPT IN HOUSING INDICATES "UPSTREAM" END OF METER.
6. METER MOUNTS BETWEEN CUSTOMER'S PIPELINE FLANGES. TYPES AND RATINGS LISTED IN TABLE OF DIMENSIONS.

line 1

THIS DRAWING IS THIRD ANGLE PROJECTION AS PER ANSI Y14.3

OUTLINE DIMENSIONS - MODEL 1001475
MINI-MAG II MAGNETIC FLOWMETER
SIZE 2 (50), 3 (80) AND 4 INCH (100)
F/LCD INDICATION

FISCHER & PORTER

UNLESS OTHERWISE SPECIFIED

PART NUMBER C 00-100-4061

000164

7412

For: Fermco
Customer Order No. 54931
P.O. # 95CP003556
Bailey-Fischer & Porter Co. Serial No. 149731
Line 1
By: Sharon Baker
Date: 7 June 1995

000165

REV	AUTHORITY	REVISION DESCRIPTION	DWN BY	CHKD BY	APVD BY
1	[illegible]	ADDED 1001478 TO MODEL 10.8	[illegible]	[illegible]	—
2	[illegible]	REV NOTES 6, 8 & 9 OF REV ONE. SEE REV 1	[illegible]	[illegible]	[illegible]

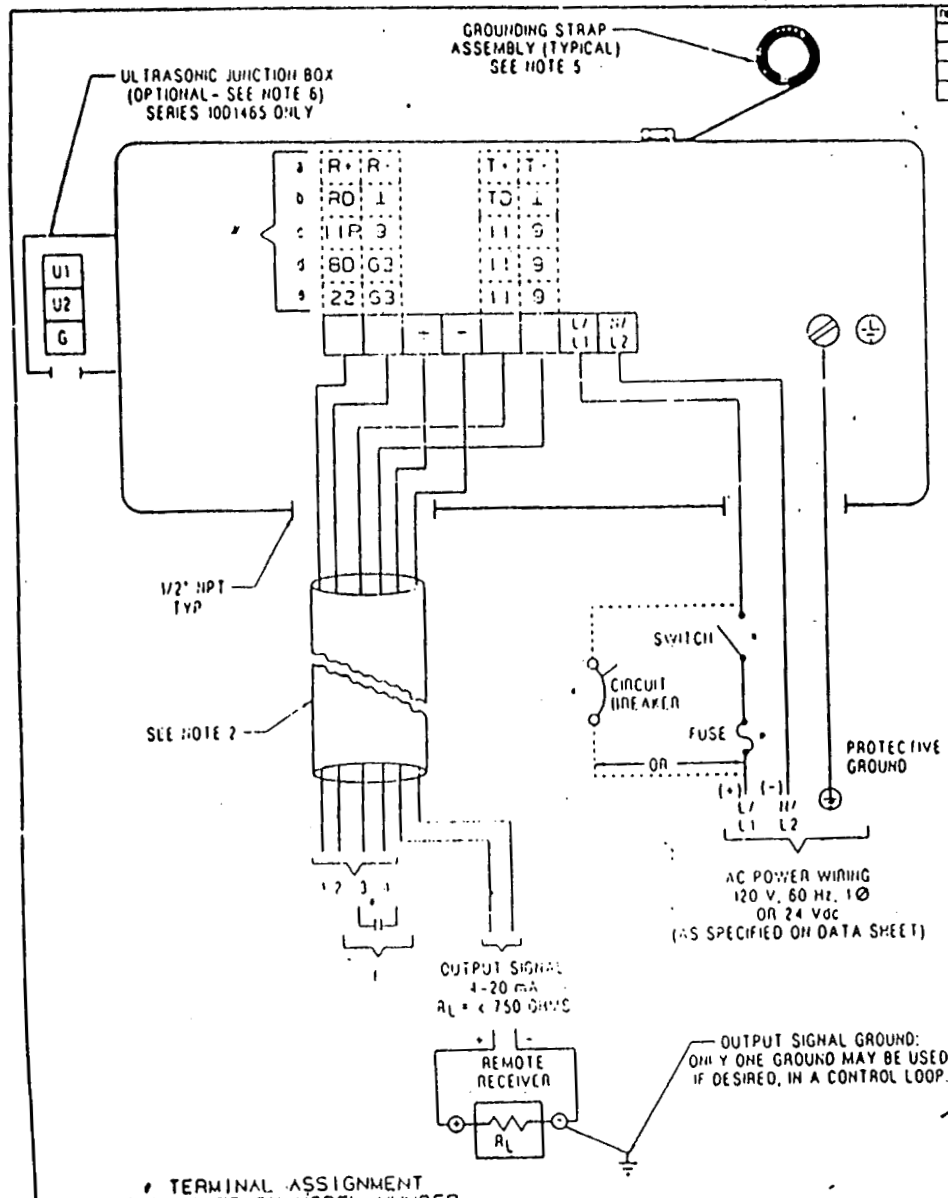

TERMINAL ASSIGNMENT TABLE

a) DATA LINK RS 485 1/2/3/4

b) DATA LINK RS 232C 1/2/3/4

c) SCALED PULSE OUTPUT, ACTIVE, 24 Vdc, LOAD > 150 OHMS
1/2 - REVERSE FLOW
3/4 - FOWARD FLOW

d) SCALED PULSE OUTPUT, ACTIVE, 24 Vdc LOAD > 150 OHMS & 10 KHz UNSCALED PULSE
1/2 - 10 KHz UNSCALED PULSE
3/4 - FOWARD FLOW

e) SCALED PULSE OUTPUT, ACTIVE, 24 Vdc, LOAD > 150 OHMS & ZERO RETURN
1/2 - ZERO RETURN FEATURE
3/4 - FORWARD FLOW

f) FIELD CONTACTS: ZERO RETURN FIELD CONTACTS TO CLOSE WHEN METER SUPPLY PUMP OR VALVE STOPS FLOW THRU METER. TERMINALS 22 & G3 REMAIN OPEN IF THIS FEATURE IS NOT USED.

NOTES:

1. * INDICATES SUPPLIED BY CUSTOMER
2. ALL WIRING TO BE ENCLOSED IN METAL CONDUIT SUPPLIED BY CUSTOMER.
3. UNUSED CONNECTIONS MUST BE PLUGGED.
4. ALL CONDUIT CONNECTIONS ARE 1/2" NPT.
5. METER GROUNDING STRAPS ARE USED TO PREVENT STRAY ELECTRICAL CURRENTS FROM PASSING THROUGH THE METERED LIQUID. SEE INSTRUCTION BULLETIN FOR DETAILS.
6. WHEN ULTRASONIC CLEANING IS SPECIFIED, REFER TO INSTRUCTION BULLETIN 55UC2000.

line 1

INTERCONN WIRING DIAG
MAG FLOWMETER W/INT
MOUNTED XM SIGNAL CONV

FISCHER & PORTER
HORSHAM, PA 19044 USA

DWN	[illegible]	D-OR	[illegible]	QZ	
CHKD	[illegible]	MOD	[illegible]	WZ	
QUAL	[illegible]	AUTH	[illegible]		
REF DWG	10-50-1781	B/M		SCALE-NONE	

PART NUMBER: C 10-50-1784 — REV 2
DRAWING NUMBER

ATTACHMENT C2

INSTRUCTION BULLETIN MAGNETIC FLOW METERS 10 D 1475

7412

BAILEY FISCHER & PORTER

a unit of Elsag Bailey Process Automation

INSTRUCTION BULLETIN
MAGNETIC FLOWMETERS
10D1475
Design Levels E and P

MINI-MAG® MAGNETIC FLOWMETER

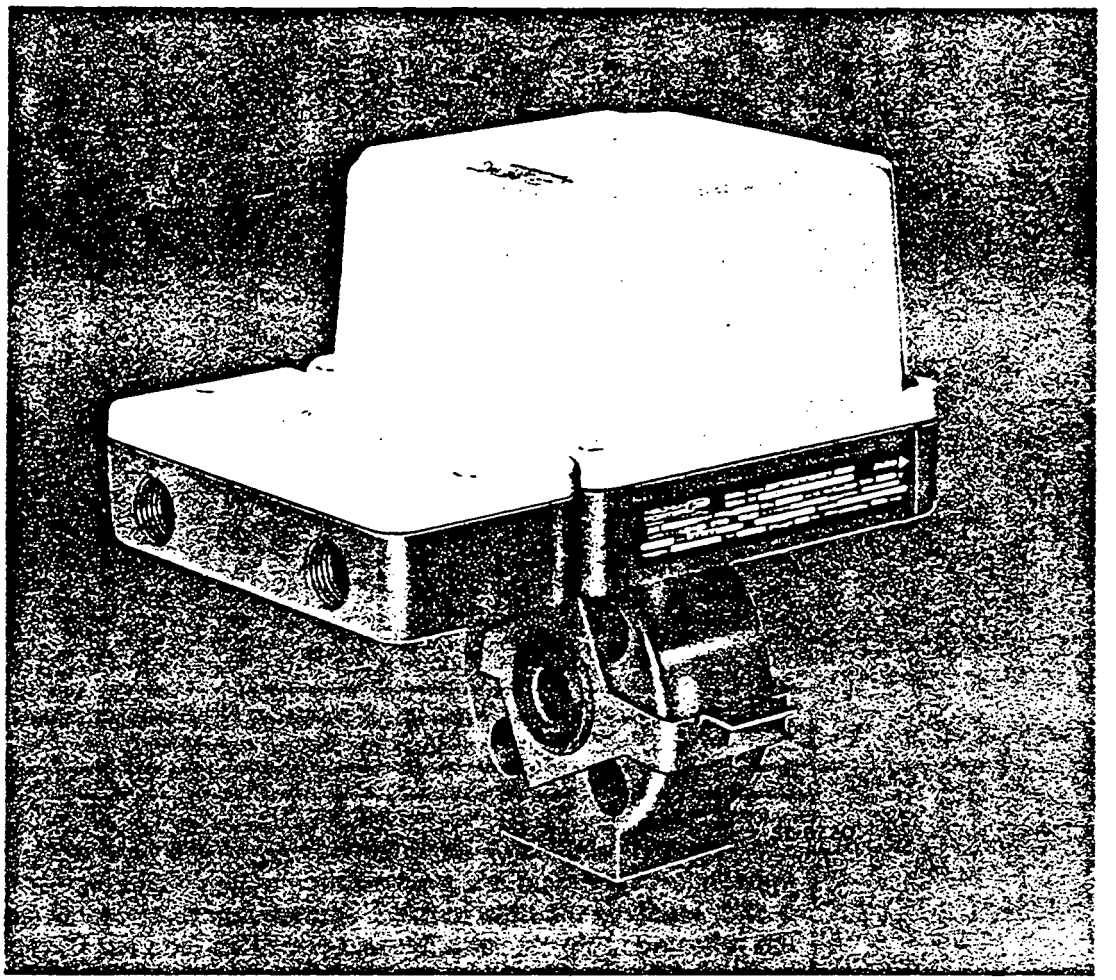

Pub. 24332

000167

The following are registered trademarks of Fischer & Porter Co:

MAG-X
MINI-MAG

The following are trademarks of E. I. DuPont de Nemours & Co:

TEFLON
TEFZEL

The following is a trademark of Haynes International Inc:

HASTELLOY

The following is a trademark of Richard Klinger, Inc:

KLINGER SIL C-4401

Read these instructions before starting installation; save these instructions for future reference.

NOTICE

The instructions given herein cover generally the description, installation, operation and maintenance of subject equipment. Fischer & Porter reserves the right to make engineering refinements that may not be reflected in this bulletin. Should any questions arise which may not be answered specifically by these instructions, they should be directed to Fischer & Porter for further detailed information and technical assistance. The material in this manual is for informational purposes and is subject to change without notice. Fischer & Porter Company assumes no responsibility for any errors that may appear in this manual.

Copyright 1990 Fischer & Porter Company.
[October 1990]

Table of Contents

1.0 INTRODUCTION 1-1
1.1 General 1-1
1.2 Model Number Breakdown 1-4
1.3 Specifications 1-8

2.0 INSTALLATION 2-1
2.1 Inspection 2-1
2.2 Location 2-1
2.3 Mounting 2-3
2.3.1 Meter Orientation 2-3
2.3.2 Meter Handling 2-5
2.3.3 Pipe Connections 2-5
2.3.4 Basic Mounting Procedure 2-7
2.4 Grounding Procedure 2-9
2.4.1 General 2-9
2.4.2 Conductive Pipeline 2-10
2.4.3 Non-Conductive or Insulated Pipeline 2-12
2.5 Electrical Interconnection 2-14

3.0 START-UP and OPERATION 3-1

4.0 FUNCTIONAL DESCRIPTION 4-1
4.1 Basic Operating Principle 4-1
4.1.1 Signal Voltage Generation 4-1
4.1.2 Magnet Coil Drive Circuits 4-2
4.1.3 Volumetric Flow Rate Measurement 4-2
4.2 Operating Characteristics 4-3
4.2.1 Fluid Variables 4-3
4.2.1.1 Fluid Conductivity 4-3
4.2.1.2 Fluid Temperature 4-4
4.2.1.3 Other Liquid Variables 4-5
4.2.2 Metering Characteristics 4-5

5.0 CIRCUIT DESCRIPTION 5-1
5.1 Primary Signals 5-1
5.2 Constant Meter Factor (CMF) 5-1

Table of Contents (continued)

6.0 MAINTENANCE 6-1
6.1. General 6-1
6.2 System Troubleshooting 6-2
6.3. Static Test 6-3
6.3.1 Magnet Coil Check 6-3
6.3.2 Electrode Check 6-4
6.3.3 Primary CMF Board 6-6

7.0 PARTS LIST 7-1

Table of Figures

FIGURE 1-1. TYPICAL FLOWMETER 1-1
FIGURE 1-2. ELECTRONICS COMPARTMENT WITHOUT SIGNAL CONVERTER 1-2
FIGURE 1-3. ELECTRONICS COMPARTMENT WITH ANALOG SIGNAL CONVERTER 1-3
FIGURE 2-1. OUTLINE DIMENSIONS OF 3-40 mm (1/10 - 1-1/2")
FLOWMETER WITH OR WITHOUT SIGNAL CONVERTER 2-2
FIGURE 2-2. OUTLINE DIMENSIONS OF 50-100 mm (2-4")
FLOWMETER WITH OR WITHOUT SIGNAL CONVERTER 2-3
FIGURE 2-3. RECOMMENDED PIPING DIAGRAM 2-4
FIGURE 2-4. MOUNTING DIAGRAM FOR 3 - 40 mm (1/10 - 1-1/2") SIZES 2-6
FIGURE 2-5. MOUNTING DIAGRAM FOR 50 - 100 mm (2 - 4") SIZES 2-8
FIGURE 2-6. GROUNDING PROCEDURE, NON-INSULATED PIPE 2-11
FIGURE 2-7. GROUNDING PROCEDURE,INSULATED PIPE 2-13
FIGURE 2-8. OUTLINE DIMENSIONS, GROUNDING RINGS 2-14
FIGURE 3-1. TYPICAL INSTRUMENT TAG 3-1
FIGURE 3-2 . PRIMARY MOUNTED PC ASSEMBLIES 3-2
FIGURE 5-1. SCHEMATIC for PRIMARY WIRING WHEN USING INTEGRAL CONVERTER 5-2
FIGURE 5-2. SCHEMATIC for PRIMARY WIRING WHEN USING REMOTE CONVERTER 5-3
FIGURE 5-3. SCHEMATIC for CMF BOARD 5-5
FIGURE 6-1. EXPLODED VIEW, BASIC FLOWMETER PARTS 6-8

1.0 INTRODUCTION

1.1 General

The Fischer & Porter Series 10D1475 MINI-MAG® Magnetic Flowmeter is an electromagnetic liquid flow rate detector. The meter utilizes the characteristics of a conductive liquid to generate an induced voltage, directly proportional to flow rate, as the liquid passes internal electrodes. The resultant voltage is applied to a solid state electronics package that conditions it to an output signal compatible with conventional receiving equipment.

The meter's design provides a compact, very low power, obstructionless primary metering element that bolts between flanges in a process pipeline. Pressure losses in this type of meter are reduced to levels occurring in equivalent lengths of equal diameter pipeline, thus reducing or conserving pressure source requirements as compared to other metering methods. The compact size of the meter results in a light-weight unit that requires no additional support other than that used normally on pipe runs.

This Flowmeter can be used to meter either clean or dirty liquids. The meter may be used without regard to the heterogeneous consistency and is as independent of the tendency to plug or foul as the pipeline in which it is mounted. By design, only the liner and electrodes are wetted parts and will accommodate most acids, bases, water and aqueous solutions.

Viscosity and density of the metered liquid have no effect on the measurement accuracy of the meter and, therefore, signal compensation is not required. Metering limitations are confined to a minimum threshold of electrical conductivity inherent to the liquid being metered. The degree of liquid conductivity has no effect upon the metering accuracy (as long as it is greater than the minimum level). The liquid temperature and pressure are limited only to the meter material specification limit.

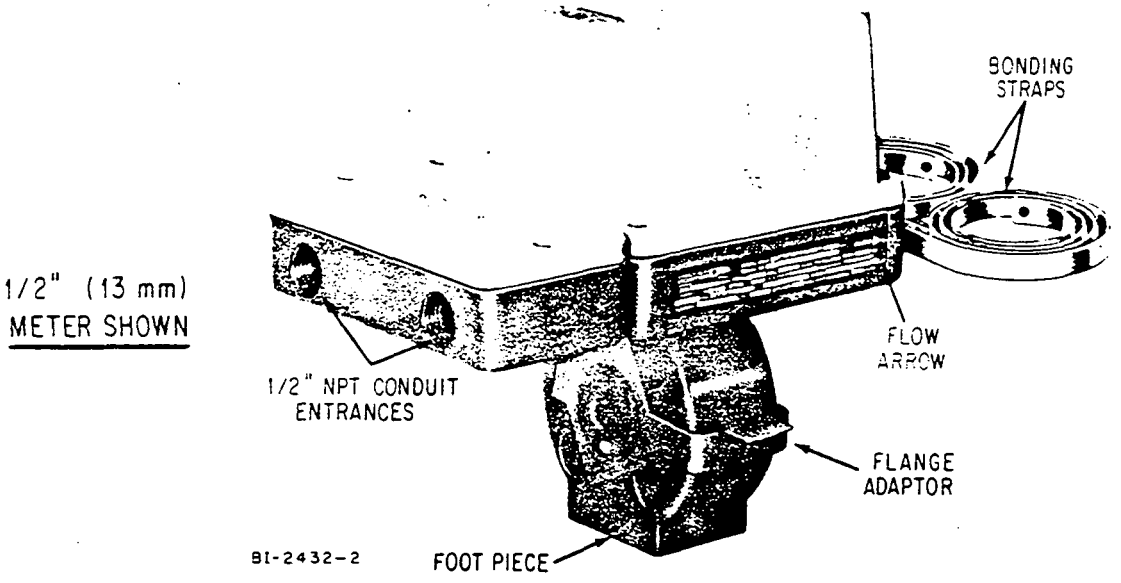

FIGURE 1-1. TYPICAL FLOWMETER

The meter body is a sealed section that bolts between the customer's pipe line flanges. The body has either a TEFZEL (ETFE) or TEFLON (PFA) liner which is turned out against the flange faces. The measuring electrodes that contact the process liquid have their ends flush with the inside of the liner. For accurate results, the meter bore diameter must be centered in the pipeline. For the larger size meters, spacer sleeves are slipped over the flange mounting bolts. The smaller size meters use a unique centering device (called a flange adaptor) to center the meter and is shown in Figure 1-1.

The associated electronics package is called the Signal Converter and may be either integrally or remotely mounted. A typical MINI-MAG Magnetic Flowmeter is shown in Figure 1-1. Figures 1-2 and 1-3 show the electronic housing with and without the integral Signal Converter. The Flowmeter without the electronic package is used with a remote Signal Converter. A remote mounted Signal Converter is recommended if 1) the vibration specification is exceeded and/or 2) the process liquid temperature exceeds the value given for that ambient temperature listed in the specifications.

The Signal Converter also contains a magnet driver unit that is used to power the meter's magnet coils. The steady state magnetic field principle, referred to as the MAG-X design concept, provides optimum zero point stability at an optimized frequency which is a submultiple of the power line frequency.

For additional detail, refer to the Section titled Functional Description.

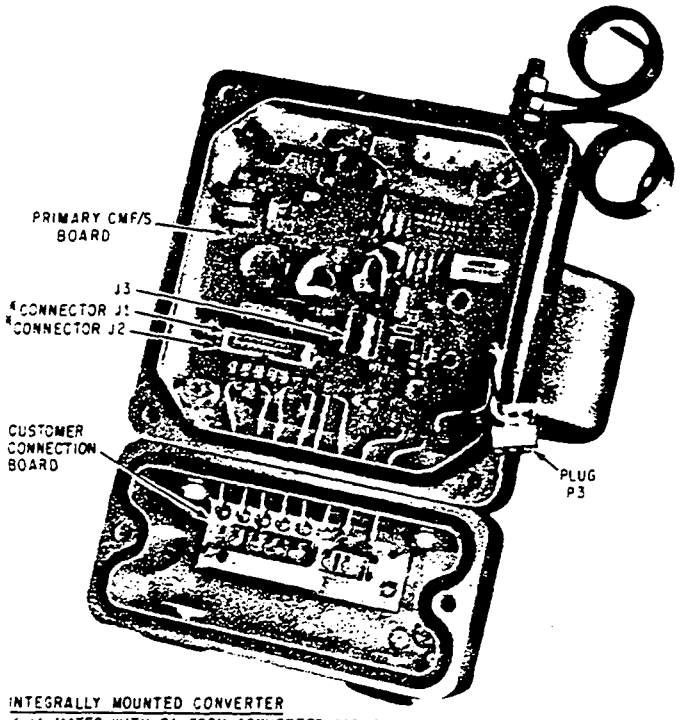

INTEGRALLY MOUNTED CONVERTER
* J1 MATES WITH P1 FROM CONVERTER CABLE.
P3 MATES WITH J3 ON OUTPUT BOARD.
REMOTE MOUNTED CONVERTER
* J1/J2 MATES WITH P1/P2 ON ADAPTOR BOARD.
P3 MATES WITH J3 ON PRIMARY BOARD.

SI-7000

FIGURE 1-2. ELECTRONICS COMPARTMENT WITHOUT SIGNAL CONVERTER

000172

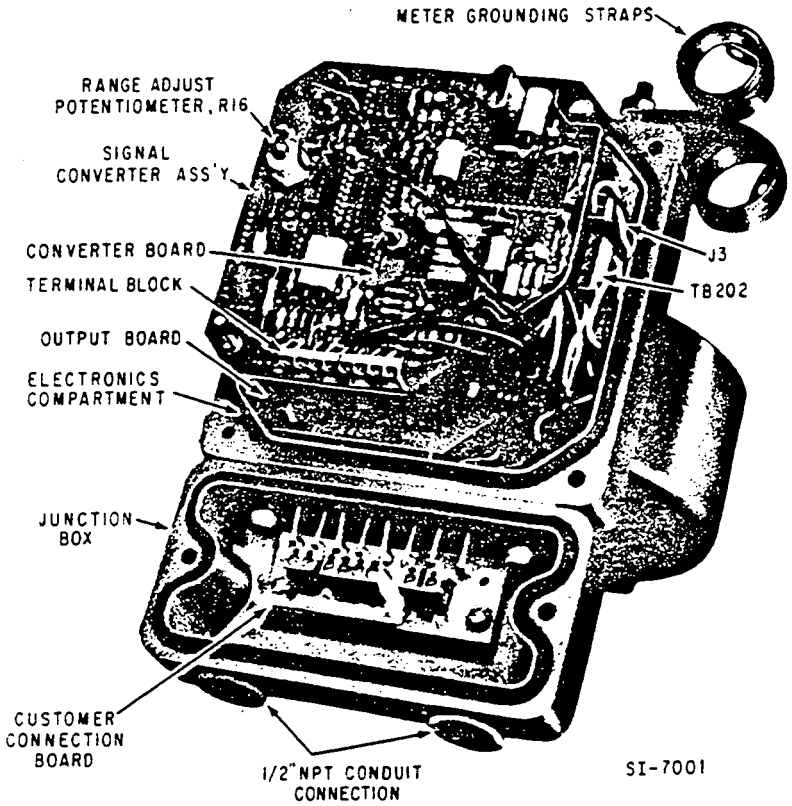

FIGURE 1-3. ELECTRONICS COMPARTMENT WITH ANALOG SIGNAL CONVERTER

1.2 Model Number Breakdown

Refer to the F&P data sheet or the data tag on the equipment for the model number of the instrument furnished. The details of a specific number are as follows:

1.2.1 Model 10D1475E

10D 1475 E A 00 A A 2 9 A A 0 0 A A

Engineering File Reference - 10D
Obstructionless Magnetic Flowmeter

Design Designation — 1475
MINI-MAG Design
(non-flanged insert)
MAG-X Driver Circuit

Design Level — E
Letter assigned by the factory;
Constant meter factor/size and
Analog Signal Converter

Liner Material
*TEFLON (PFA) — K
**TEFZEL (ETFE) — N

METER SIZE, mm (inches)
3 (1/10) — 01
4 (5/32) — 02
6 (1/4) — 04
10 (3/8) — 06
15 (1/2) — 07
25 (1) — 09
40 (1-1/2) — 11
50 (2) — 12
80 (3) — 14
100 (4) — 15

Flange Standard/Pressure Rating
(Meter clamps between customer's pipeline flanges)
ANSI Class 150 — P
ANSI Class 300 — Q
BS10 Table D — S
BS10 Table E — T
BS10 Table F — U
DIN PN 16 — D
DIN PN 40 — F
Primary without topworks — 2

Electrode Material
Tantalum — F
Zirconium — L
Platinum — M

Electrode Type
Flush — 2

Flange Material
Flangeless Design — 9

Safety Classification
Without FM Approval (General Purpose)
Integral or Remote Converter — A

FM Approved
Nonincendive for Cl I, Div 2, Gp,A,B,C&D;
Electrodes Intrinsically Safe Cl I, Div 1, Gp
A,B,C&D;
Dust-Ignitionproof Cl II, Div 1, Gp E,F&G;
Suitable for Cl III, Div 1 - Outdoor
hazardous locations, NEMA 4
(Power Requirement must be C,D,V,W,1,H,6 or 7) — K

000174

1.2.1 Model 10D1475E (continued)

10D 1475 E A 00 A A 2 2 A A 0 0 A A

FM Approved -
***Primary (1/10" - 3/8" size with TEFZEL liner):
Suitable for Cl I, Div 1, Gp B,C&D;
Dust-Ignitionproof Cl II, Div 1, Gp E,F&G;
Suitable for Cl III, Div 1
Outdoor Hazardous Location, NEMA 4;
Signal Converter:
Nonincendive for Cl I, Div 2, Gp A,B,C&D
Dust-Ignitionproof Cl II, Div 1, Gp E,F&G;
Suitable for Cl III, Div 1
Outdoor Hazardous Location, NEMA 4; — L

FM Approved -
***Primary (1/10" - 3/8" size with TEFZEL liner):
Suitable for Cl I, Div 1, Gp B,C&D;
Dust-Ignitionproof Cl II, Div 1, Gp, E,F&G;
Suitable for Cl III, Div 1
Outdoor Hazardous Location, NEMA 4;
Signal Converter:
Explosionproof for Cl I, Div 1, Gp C&D;
Dust-Ignitionproof Cl II, Div 1, Gp, E,F&G;
Suitable for Cl III, Div 1
Outdoor Hazardous Location, NEMA 4; — M

Power Requirement

Signal Converter Integral Mounted		Signal Converter Remote Mounted	
220 V ac, 50 Hz	A	220 V ac, 50 Hz	R
220 V ac, 60 Hz	B	220 V ac, 60 Hz	S
120 V ac, 50 Hz	C	240 V ac, 50 Hz	T
120 V ac, 60 Hz	D	240 V ac, 60 Hz	U
240 V ac, 50 Hz	K	120 V ac, 50 Hz	V
240 V ac, 60 Hz	L	120 V ac, 60 Hz	W
#12 V dc	1	#12 V dc	6
#24 V dc	H	#24 V dc	7

Remote Converter with separate Model Number — Y

Enclosure Classification
IEC 529 IP 65, NEMA 4 — 1
Accidental submergence, IEC 529 IP 67
30 ft H_2O/48 h (9 m H_2O/48 h) — 5

Fluid Temperature Range
Integral Converter To 80°C (175°F) — 1
Remote Converter To 121°C (250°F) — 2
NOTE: See Process Limits under 1.3 Specifications for allowable combinations of liquid and ambient temperature at primary.

Output Signal
No Output Signal Required — A
0-20 mA dc — B
4-20 mA dc — C
0-1 kHz pulse (not available when Scaler option is specified) — G
*4-20 mA dc with direct reading indicator (3-1/2 digit LCD) — K

Scaler
No scaled output required — A
Isolated Scaled Freqency Output
50 ms pulse, 10 Hz max, Opto coupled — B
Isolated Scaled Frequency Output
50 µs pulse, 10 kHz max, Opto coupled — C

* Used with sizes 1/2" - 4".
** Available in size 1/10" - 3/8" only.
*** Safety Classification options L and M are not available with constant meter factor/size. These options have individual meter factors determined by calibration.
• When supplied with integrally mounted Converter, Enclosure Classification must be "1" and Safety Classification must be "A" or "K".
Requires Product Manager approval.

1.2 Model Number (continued)

1.2.2 Model 10D1475P

10D 1475 P A 00 A A 2 9 A A 0 0 A 0 0 0 0

Engineering File Reference – 10D
Obstructionless Magnetic Flowmeter

Design Designation — 1475
MINI-MAG Design
(non-flanged insert)
MAG-X Driver Circuit

Design Level — P
Letter assigned by the factory;
Constant meter factor/size and
Microprocessor-Based Signal Converter

Liner Material
*TEFLON (PFA) — K
**TEFZEL (ETFE) — N

METER SIZE, mm (inches)
3 (1/10) — 01
4 (5/32) — 02
6 (1/4) — 04
10 (3/8) — 06
15 (1/2) — 07
25 (1) — 09
40 (1-1/2) — 11
50 (2) — 12
80 (3) — 14
100 (4) — 15

Flange Standard/Pressure Rating
(Meter clamps between customer's pipeline flanges)
ANSI Class 150 — P
ANSI Class 300 — Q
BS10 Table D — S
BS10 Table E — T
BS10 Table F — U
DIN PN 16 — D
DIN PN 40 — F

Electrode Material
Tantalum — F
Zirconium — L
Platinum — M

Electrode Type
Flush — 2

Flange Material
Flangeless Design — 9

Safety Classification
Without FM Approval (General Purpose)
Integral or Remote Converter — A

FM Approved ***
Nonincendive for Cl I, Div 2, Gp.A,B,C&D;
Electrodes Intrinsically Safe Cl I, Div 2, Gp A,B,C&D;
Dust-Ignitionproof Cl II, Div 1, Gp E,F&G;
Suitable for Cl III, Div 1 - Outdoor
hazardous locations, NEMA 4
(Power Requirement must be C or Y) — K

1.2.2 Model 10D1475P (continued)

10D 1475 P A 00 A A 2 9 A A 0 0 A 0 0 0 0

Power Requirement
Signal Converter Integral Mounted
240 V ac, 50/60 Hz — A
220 V ac, 50/60 Hz — B
120 V ac, 50/60 Hz — C
110 V ac, 50/60 Hz — D
24 V dc — H

Remote Converter with separate Model Number — Y

Enclosure Classification
IEC 529 IP 65, NEMA 4 — 1
Accidental submergence, IEC 529 IP 67
30 ft H_2O/48 h (9 m H_2O/48 h) — 5

Fluid Temperature Range
Integral Converter to 65°C (149°F) — 1
Remote Converter to 121°C (250°F) — 2
NOTE; See Process Limits under 1.3 Specifications for allowable combination of liquid and ambient temperature at primary.

Output Current
No Output Signal Required — A
4-20 mA dc — C

Output Options
No Scaled Output Required — 1
#Active Scaled Pulse Forward and Zero Return — 2
#Active Scaled Pulse Forward and Reverse — 4
Data Link RS 232C — 5
Data Link RS 485 — 6
#Active Scaled Pulse Forward and 10 kHz Unscaled Pulse — 7

Communication Mode Over Data Link
Not applicable — 1
ASCII — 2
MICRO-DCI Binary — 3
HART Protocol — 4

Coil Drive Frequency
7-1/2 Hz (60 Hz) — 1
15 Hz (60 Hz) — 2
+DC 15 Hz (@60 Hz Line Frequency) — 3

Additional Options
None — 2
++Hart Protocol — 3

---

* Used with sizes 1/2" - 4".
** Available in size 1/10" - 3/8" only.
*** Approval pending
# 4 kHz max pulse configurable from .032 ms to 2000 ms.
+ Must be approved by Product Manager.
++ Communications Mode must be "4", Output Options can be "1", "2","4" or "7".

1.3 Specifications

Power Requirements	See Section 1.2 Model Number Breakdown
Power Consumption	Refer to Converter Instruction Bulletin, as specified Typically, 10D1475E ..... 15 VA 10D1475P ... 30 VA
Flowmeter Characteristics	
Meter Size/Flow Capacity	See Table 1-1
Span	Factory set at specified range between extremes listed in Table 1-1; can be field adjusted.
Rangeability	100:1
Minimum Liquid Conductivity	5 µS/cm

System Accuracy

10D1475E	Flowrate	Accuracy
Analog Output*	<10% ≥10%	± 0.2% fsc ± 1.0% of rate + 0.1% fsc
Frequency Output*	<10% ≥10%	± 0.1% fsc ± 1.0% of rate

*For Converters with dc power input add ±0.03 ft/s (±0.01 m/s) to tabulated accuracy values. This number corresponds to 0.1% of meter calibration factor.

10D1475P	Flowrate	Accuracy
Frequency Output	<2% CAL Factor ≥2% CAL Factor	± 0.01% CAL Factor ± 0.5% of rate

RFI Protection	Class 2-abc-0.1% (10 V/m-20 to 1000 MHz) Per SAMA Standard PMC 33.1-1978. Standard with integral Converters; not available with remote Converter.

000178

Environmental Limits

Enclosure Classification with or without Signal Converter	IEC 529 IP65; NEMA 4
Accidental Submergence	IEC 529 IP67, 30' H_2O/48 h (9 m H_2O /48 h)

Environmental Temperature Limits

	10D1475E	10D1475P
Remote Converter	-40 to 65°C (-40 to 150°F)	-40 to 65°C (-40 to 150°F)
Integral Converter	-40 to 65°C (-40 to 150°F)	-10 to 55°C (14 to 131°F)

PROCESS LIMITS
Temperature Limits, Process Liquid

Model 10D1475E

Ambient Temp		Max Liquid Temp	
°C	°F	°C	°F
0	32	121	250
20	68	110	230
35	95	95	203
45	113	85	185
50	122	80	176
60	140	70	158
65	149	65	149

Model 10D1475P

Ambient Temp		Max Liquid Temp	
°C	°F	°C	°F
0	32	121	250
10	50	110	230
20	68	100	212
30	86	90	194
40	104	80	176
50	122	70	158
55	131	65	149

NOTE
Signal Converter must be remote mounted if liquid temperature exceeds value listed for a given ambient temperature. Liquid temperature must not exceed 250°F (121°C) in any event.

Pressure

Pressure		Temperature	
MPa	psi	°C	°F
5.11	740	40	100
4.96	720	65	150
4.5	650	120	250

Vacuum — full vacuum at 100°C (212°F) for 1/10" - 3" sizes
full vacuum at 80°C (176°F) for 4" Size

Meter Calibration Factor — specified on primary data tag (equal to max flow capacity in engineering units). This factor is equivalent to a flow velocity of 33.33 ft/s in the metering tube.

Physical Characteristics

Outline Dimensions Magnetic Flowmeter with or without integral Signal Converter

- 3 - 40 mm (1/10 - 1-1/2") — See Figure 2-1
- 50 - 100 mm (2 - 4") — See Figure 2-2

Remote Mounted Signal Converter — See Converter Specifications

Conduit Connections — (2) 1/2" NPT internally threaded entrances in primary junction box

Meter Weight

- Magnetic Flowmeter with integral Signal Converter — See Table 1-2
- Remote Mounted Signal Converter — See Signal Converter specifications

Signal Converter Vibration Limit

- Integral Mounted — *5 to 14 Hz, 0.10", 14 to 2000 Hz, 1 g
- Remote Mounted — 5 to 14 Hz, 0.20" 14 to 2000 Hz, 1.5 g

*Signal Converter must be remote mounted if these limits are exceeded.

000180

Materials of Construction

Meter Liner	
3 - 10 mm (1/10 - 3/8)	TEFZEL (ETFE)
15 - 100 mm (1/2 - 4")	TEFLON (PFA)
Electrode Assemblies	Tantalum, Zirconium or Platinum materials as specified (ref: Application Guide PMI IV.C.10)
Meter Body	carbon steel, all welded construction, epoxy finish
Electronics Housing	die cast aluminum, epoxy finish, 316 sst attachment screws, 1/2" NPT conduit connections; gasketed covers
Installation Kit	includes 2 gaskets, mounting studs and nuts, flange adaptor device(s) when required.
Safety Classification	See 1.2 Model Number Breakdown

TABLE 1-1 CAL FACTOR & CAPACITY

NOTE

The CAL FACTOR given herein can be used only with Model 10D1475-D, E, M, N and P. For meters manufactured under design levels A - C, refer to the meter data tag for the appropriate factor.

			FLOW RANGES 0 TO VALUE TABULATED					
SIZE		CAL FACTOR*	MINIMUM 10D1475D&E		MINIMUM 10D1475M,N&P		MAXIMUM	
mm	INCH	gpm	gpm	lpm	gpm	lpm	gpm	lpm
3	1/10	1.073	0.096	0.40	0.054	0.20	1.20	4.00
4	5/32	2.147	0.192	0.80	0.108	0.40	2.40	8.00
6	1/4	5.367	0.480	2.00	0.270	1.00	6.00	20.0
10	3/8	12.08	1.08	4.50	0.605	2.25	13.5	45.0
15	1/2	26.84	2.40	10.0	1.35	5.0	30.0	100.
25	1	53.67	4.80	20.0	2.70	10.0	60.0	200.
40	1-1/2	161.0	14.4	60.0	8.10	30.0	180.	600.
				m^3/H		m^3/H		m^3/H
50	2	268.4	24.0	6.0	13.5	3.0	300.	60.
80	3	805.1	72.0	18.0	40.5	9.0	900.	180.
100	4	1,073	96.0	24.0	53.7	12.0	1200	240.

*Flow Velocity (ft/s) = (Operating GPM x 33.33)/CAL Factor

TABLE 1-2. METER WEIGHT

METER SIZE		WEIGHT	
inches	mm	pounds	kilograms
1/10	3	9	4
5/32	4	9	4
1/4	6	9	4
3/8	10	9	4
1/2	15	9	4
1	25	11	5
1-1/2	40	18	8
2	50	13	6
3	80	20	9
4	100	31	14

000182

2.0 INSTALLATION

2.1 Inspection

All F&P Model 10D1475 MINI-MAG® Magnetic Flowmeters are shipped in heavy duty containers. An itemized list of all items included in the shipment is attached to the shipping container.

Depending upon the particular model specified, the shipment will generally consist of:

1) Magnetic Flowmeter with integral mounted Signal Converter and appropriate mounting hardware kit, or,

2) Magnetic Flowmeter and appropriate mounting hardware kit, and a remote mounted Signal Converter with mounting hardware and a 9m (30 ft) long interconnection cable.

The mounting hardware kit for the MINI-MAG includes: 1) 4 (or 8) threaded studs and nuts, 2) 2 gaskets, and 3) appropriate flange adaptor components, if specified.

NOTE

The flange adaptor device (see Figure 2-4) or adaptor sleeves (see Figure 2-5) required for the particular meter installation are supplied by F&P with all U.S. orders.

Inspect all items included in the shipment immediately for indications of damage which may have occurred during shipment. All damage claims should be reported to the shipping agent involved before attempting to install or operate the equipment.

The proper use of the items included in the mounting hardware kit, as described subsequently, and the proper employment of them during installation is necessary to maintain a valid instrument warranty. (An installation and warranty tag is furnished with the mounting hardware kit that provides the basic information essential for proper meter installation.)

Following inspection of the shipment contents, it is suggested that all items be carefully replaced in the shipping container for transit to the installation site. The use of normal care in the handling and installation of this equipment will contribute substantially toward satisfactory performance.

2.2 Location

The Flowmeter is suitable for either indoor or outdoor installation. When selecting the installation site, consideration should be given to the ambient and process temperature limits, as stated in the Specifications. Consideration should be given to access for servicing the meter. The standard meter is rated NEMA 4, watertight, and will thus stand rain and hose down. If flooding is a problem, the optional "Accidental Submersible" flowmeter is suited for 30 foot (of water) depths for up to 48 hours.

The integrally mounted Signal Converter includes RFI filters that provide excellent protection against radiated RFI/EMI. Therefore, stray electromagnetic and electrostatic fields, low power radio transmissions, etc. will have no effect upon the operating characteristics of the electronic

package of the MINI-MAG Magnetic Flowmeter system. It is recommended, however, that the meter not be installed within the immediate proximity of heavy induction equipment.

Outline dimensions of the Magnetic Flowmeter are given in Figures 2-1 and 2-2. When applicable, provide access for occasional servicing of the integrally mounted Signal Converter. At least 5" overhead clearance is required for cover removal. Observe the various clearances given on the drawing. The cover is removable from the front for servicing of the electronics; provide adequate working space. When a remote mounted Signal Converter is specified, outline and mounting dimensions are provided in the Instruction Bulletin supplied for the particular Converter.

The installation site must be provided with a source of 12 or 24 V dc or 120 V ac, 50/60 Hz (220/240 V ac, 50/60 Hz optional) single phase line power. The power source must have an external disconnect and suitable fuse (or circuit breaker), as shown on the interconnection diagram.

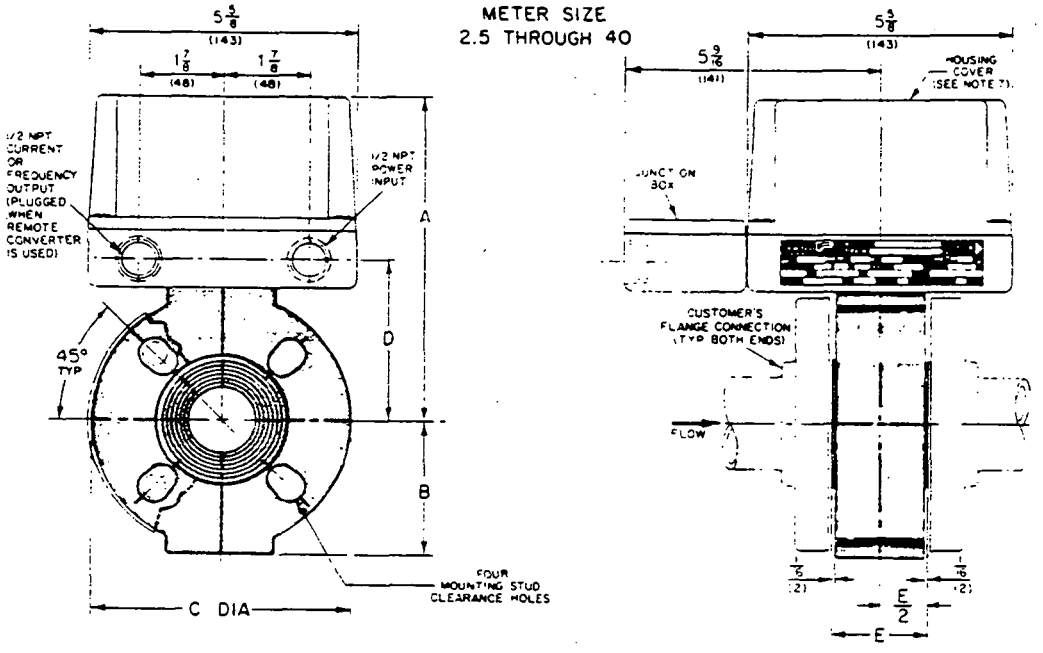

TABLE OF DIMENSIONS

METER SIZE		FLANGE SIZE		CUSTOMER FLANGE TYPE AND RATING	A[8]		B		C DIA		D		E	
INCH	mm	IN	mm		INCH	mm	INCH	mm	INCH	mm	INCH	mm	INCH	mm
1/10	3	1/2	15	ANSI 150 300 & 600 BS 10 TBL D,E,F DIN PN 10, 16, 25 & 40	6 1/4	159	2 1/32	52	3 3/4	95	2 3/16	65	2 5/32	55
5/32	4													
1/4	6													
3/8	10													
1/2	15													
1	25	1	25		6 13/16	173	2 19/32	66	4 7/8	124	3 1/8	79	2 5/32	55
1 1/2	40	1 1/2	40		7 1/2	191	3 9/32	83	6 1/8	156	3 13/16	97	2 3/4	70

NOTES

1. DIMENSIONS ARE IN INCHES AND MILLIMETERS (mm).
2. DIMENSIONS PROVIDED FOR REFERENCE ONLY.
3. ALL DIMENSIONS SUBJECT TO MANUFACTURING TOLERANCE OF ± 1/8 INCH (3mm).
4. METER MUST BE COMPLETELY FILLED WITH LIQUID TO ENSURE ACCURACY.
5. FLOW MUST BE IN SAME DIRECTION AS FLOW ARROW. 1/2 NPT CONDUIT CONNECTION IN METER HOUSING IDENTIFIES "UPSTREAM" FLANGE FACE.
6. METER MOUNTS BETWEEN CUSTOMER'S PIPELINE FLANGES; TYPES AND RATINGS LISTED IN TABLE OF DIMENSIONS.
7. CLEARANCE REQUIRED TO REMOVE COVER IS 5 IN. (127).
8. ADD 1/4" (6 mm) TO DIMENSION "A" WHEN HOUSING COVER WITH WINDOW IS SUPPLIED.

BI 2356-4

000184

FIGURE 2-1. OUTLINE DIMENSIONS OF 3-40 mm (1/10 - 1-1/2") FLOWMETER WITH OR WITHOUT SIGNAL CONVERTER

2.3 Mounting

2.3.1 Meter Orientation

The F&P Model 10D1475 MINI-MAG Magnetic Flowmeter may be installed in horizontal, vertical or sloping pipe runs. However, precautions must be taken to assure that the meter is filled at all times during measurement. A vertical installation, with the pipe line carrying liquid upwards, assures a filled hydraulic line under low flow rate conditions and also minimizes wear on the meter lining by abrasive grit. Horizontal installations should be made with the meter in the lower section of a pipeline to assure a filled meter condition.

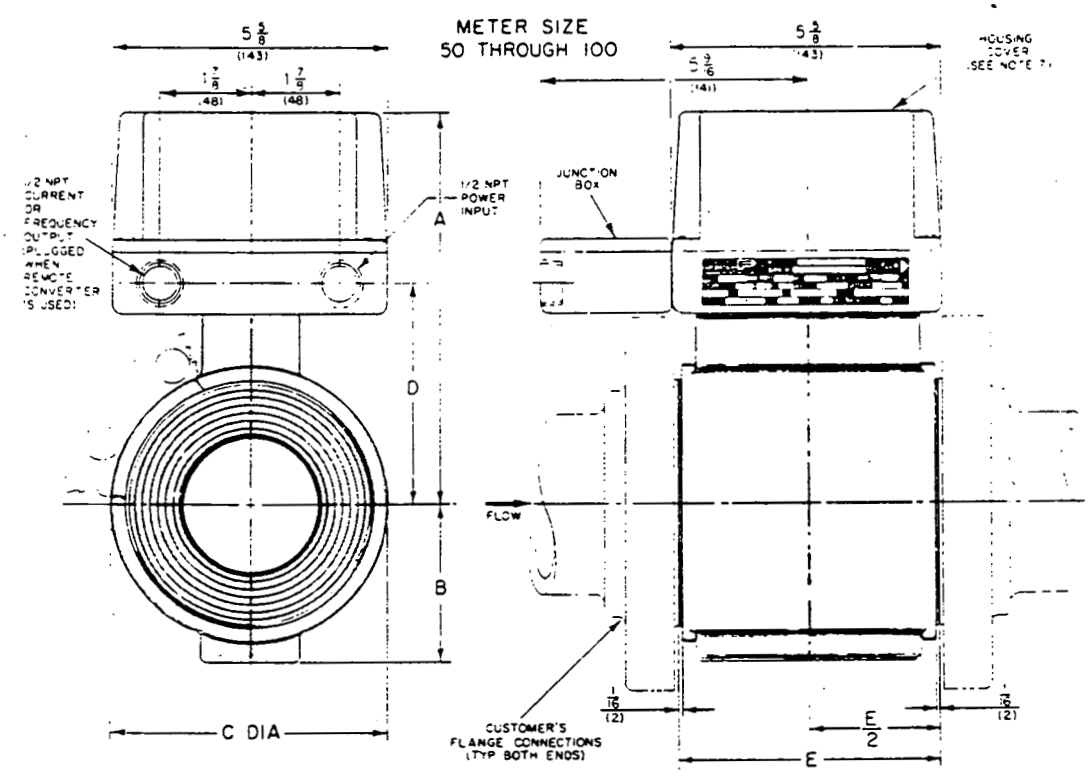

TABLE OF DIMENSIONS

METER AND FLANGE SIZES		CUSTOMER FLANGE TYPE AND RATING	A*		B		C DIA		D		E	
INCH	mm		INCH	mm	INCH	mm	INCH	mm	INCH	mm	INCH	mm
2	50	ANSI 150 ANSI 300 BS 10 TBL D,E,F DIN PN 10, 16, 25 & 40	8	203	2 7/16	62	3 7/8	98	4 5/16	110	3 1/32	85
3	80		8 11/16	221	3 3/16	81	5 1/8	130	4 31/32	126	4 23/32	120
4	100		9 3/8	238	3 11/16	94	6 3/8	162	5 1/16	144	5 29/32	150

NOTES

1. DIMENSIONS ARE IN INCHES AND MILLIMETERS (mm).
2. DIMENSIONS PROVIDED FOR REFERENCE ONLY.
3. ALL DIMENSIONS SUBJECT TO MANUFACTURING TOLERANCE OF ±1/8 INCH (3mm).
4. METER MUST BE COMPLETELY FILLED WITH LIQUID TO ENSURE ACCURACY.
5. FLOW MUST BE IN SAME DIRECTION AS FLOW ARROW. 1/2 NPT CONDUIT CONNECTION IN METER HOUSING IDENTIFIES "UPSTREAM" FLANGE FACE.
6. METER MOUNTS BETWEEN CUSTOMER'S PIPELINE FLANGES; TYPES AND RATINGS LISTED IN TABLE OF DIMENSIONS.
7. CLEARANCE REQUIRED TO REMOVE COVER IS 5 IN. (127).

* ADD 1/4" (6 mm) TO DIMENSION "A" WHEN HOUSING COVER WITH WINDOW IS SUPPLIED.

812 357-3

FIGURE 2-2. OUTLINE DIMENSIONS OF 50-100 mm (2-4") FLOWMETER WITH OR WITHOUT SIGNAL CONVERTER

The electronic housing of the meter should be top oriented for horizontal or sloping installations. This aligns the meter electrodes in a lateral plane, a position that eliminates the possibility of entrained air acting as an electrode insulator. Electrodes must not be on "top" when the meter is horizontally mounted.

The MINI-MAG Magnetic Flowmeter must be oriented in accordance with the direction of process flow, as indicated by the FLOW arrow on the meter data tags. For accurate metering, a minimum length of pipe equivalent to three straight pipe diameters is required upstream of the meter, measured from the center of the meter. See Figure 2-3 for recommended piping diagram.

When the process liquid contains abrasive grit, avoid disturbance upstream of the meter so that the liquid passes smoothly through the meter; elbows and turns can distort the flow pattern causing uneven liner wear.

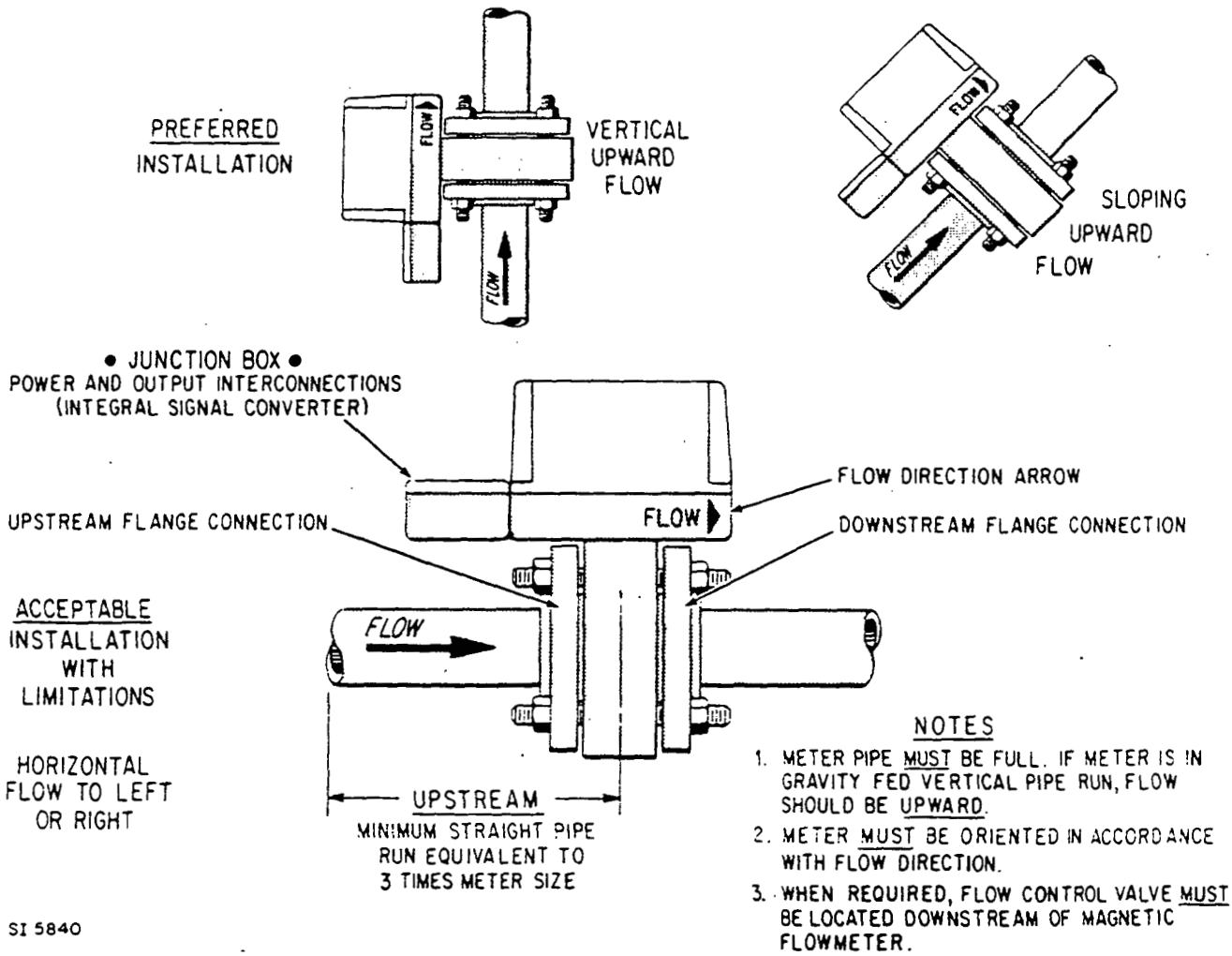

FIGURE 2-3. RECOMMENDED PIPING DIAGRAM

If a throttling valve is required, it is recommended that it be placed a minimum of two pipe diameters downstream of the meter. Valves can create turbulence that result in undesirable air pockets and may affect the meter's accuracy.

2.3.2 Meter Handling

The TEFLON or TEFZEL liner of the Flowmeter must be protected at all times. The liner can be damaged by sharp objects or cut by undue pressure. During shipment, the TEFLON liner of the 1/2 through 4 inch size meters is protected by liner protector plates that cover the meter ends. Remove the liner protector plates at the time of installation. Do not pass any rope or wire sling through the meter liner.

2.3.3 Pipe Connections

The Model 10D1475 Magnetic Flowmeter has a wafer type body designed for mounting between adjacent pipe flanges. Most commonly used ANSI, BS and DIN type flanges can be accommodated.

Mounting hardware (studs, nuts, gaskets and the flange adaptor device(s) for the particular flange type and rating specified) is included with the meter.

The MINI-MAG Magnetic Flowmeter is supplied in one of two basic body designs, depending upon meter size. For example, 3 - 40 mm (1/10 - 1-1/2 inch) size meters have clearance holes provided in the meter body for through-bolt mounting, while 50 - 100 mm (2 - 4 inch) size meter bodies mount in a cradle formed by the mounting studs (and adaptor sleeves, if required) used for that particular 4-bolt or 8-bolt flange pattern. Typical mounting arrangements are illustrated in Figures 2-4 and 2-5. Line schedule 80 or lighter pipe is recommended for system piping.

When the Magnetic Flowmeter is to be mounted in an electrically non-conductive pipeline such as totally plastic pipe, or a metal pipeline with an insulating liner, the user must obtain a pair of annular meter grounding rings (discussed subsequently under Part 2.4 Grounding Procedure) to facilitate grounding of the process. Good grounding is effected by bonding the meter body to the process liquid both upstream (inlet end) and downstream (outlet end) of the meter; thereby preventing any stray electrical currents that may be carried by the pipeline, or by the process, from passing through the Magnetic Flowmeter. Improper grounding often results in unsatisfactory meter performance, therefore particular attention should be paid to the meter grounding procedure.

The threaded mounting studs and nuts supplied in the meter installation kit should be well lubricated before use. When the meter has been installed in the pipeline, tighten the nuts in even increments around the flange surface. It is recommended that an open end wrench with a handle length no greater than 8 inches be used for tightening the nuts; i.e., torque should be limited to that which will produce a positive seal without damage to the face of the meter lining.

The flange gaskets supplied with the meter are the proper size for the flange size and type specified. When installing the meter it is important that the correct size gaskets be utilized. Use of the wrong size gaskets could allow the inner diameter of the gasket to protrude into the flow stream, thereby altering the flow profile within the meter. This condition could affect meter accuracy significantly and must be avoided.

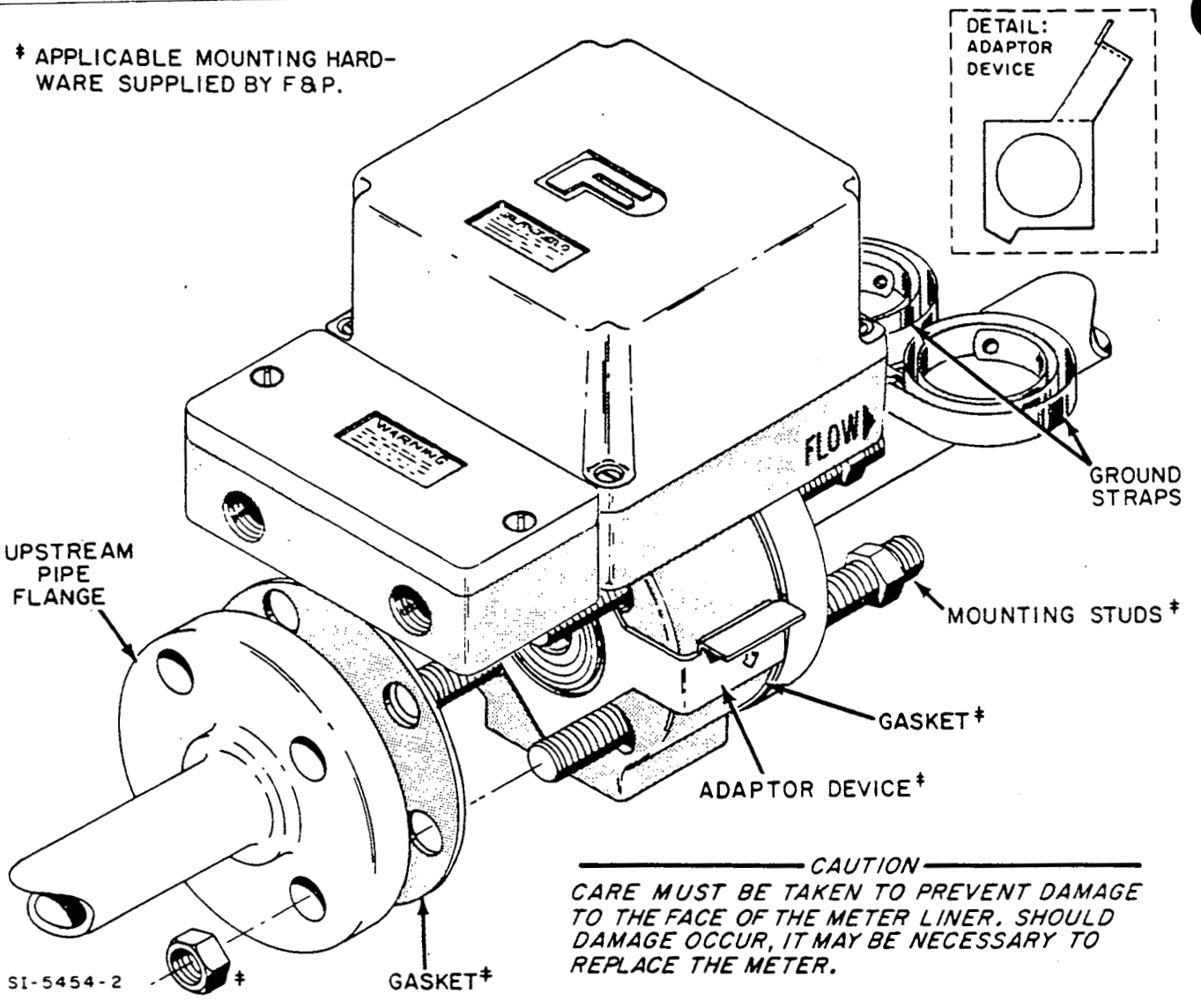

FIGURE 2-4. MOUNTING DIAGRAM FOR 3 - 40 mm (1/10 - 1-1/2") SIZES

NOTE

All 3 - 15 mm (1/10 - 1/2 inch) size Magnetic Flowmeters are supplied for use with 15 mm (1/2 inch) pipe flange.

000188

2.3.4 Basic Mounting Procedure

Select the procedure, below, as applicable for the size meter supplied.

- 3 - 40 mm (1/10 - 1-1/2 inch) Meter Sizes

Refer to Figures 2-1 and 2-4 to supplement the following procedure.

1. Remove the liner protector plates from the meter inlet and outlet ends.

2. Install flange adaptor on meter as shown in Figure 2-4. Align the flange adaptor device (supplied with meter) so that the mounting stud clearance holes in the meter body are not obstructed.

3. Place one of the flange gaskets next to the upstream (typical) pipe flange; so that the gasket will be between the pipe flange and the meter body.

4. Insert meter in pipeline in accordance with the flow direction arrow. Next, while supporting the meter, insert one, or more, of the mounting studs through the clearance holes in the upstream pipe flange and gasket, so that these studs enter the holes in the meter body. This will help support the meter.

5. Insert the other (downstream) gasket between the meter outlet and the downstream pipe flange. The mounting studs can then be guided through the clearance holes in the downstream gasket and pipe flange. Similarly, insert the remaining mounting studs through the clearance holes provided.

6. Thread nuts on both ends of the four mounting studs, finger-tight.

7. To center the Magnetic Flowmeter with the longitudinal axis of the pipeline, press down firmly on the flange adaptor. This will force-spread the mounting studs, thereby centering the meter body (and gasket). Press down until nuts have been sufficiently tightened to prevent movement of meter relative to the flanges.

8. Tighten the stud nuts in even increments to produce even pressure distribution around the respective flanges. Bolt torque should be limited to that which is sufficient to produce a positive seal for the application.

- 50 - 100 mm (2 - 4 inch) Meter Sizes

Refer to Figures 2-2 and 2-5 to supplement the following procedure.

1. Remove the liner protector plates from the meter inlet and outlet ends.

2. Insert both of the two lower mounting studs (see Figure 2-5, Detail "I" 4-Bolt Flange, or Detail "II" 8-Bolt Flange, as applicable) through the clearance holes in the pipe flange, such that approximately half the stud length extends past the flange face. (Start with either the upstream or downstream flange, as convenient.)

3. Install a gasket next to the flange face.

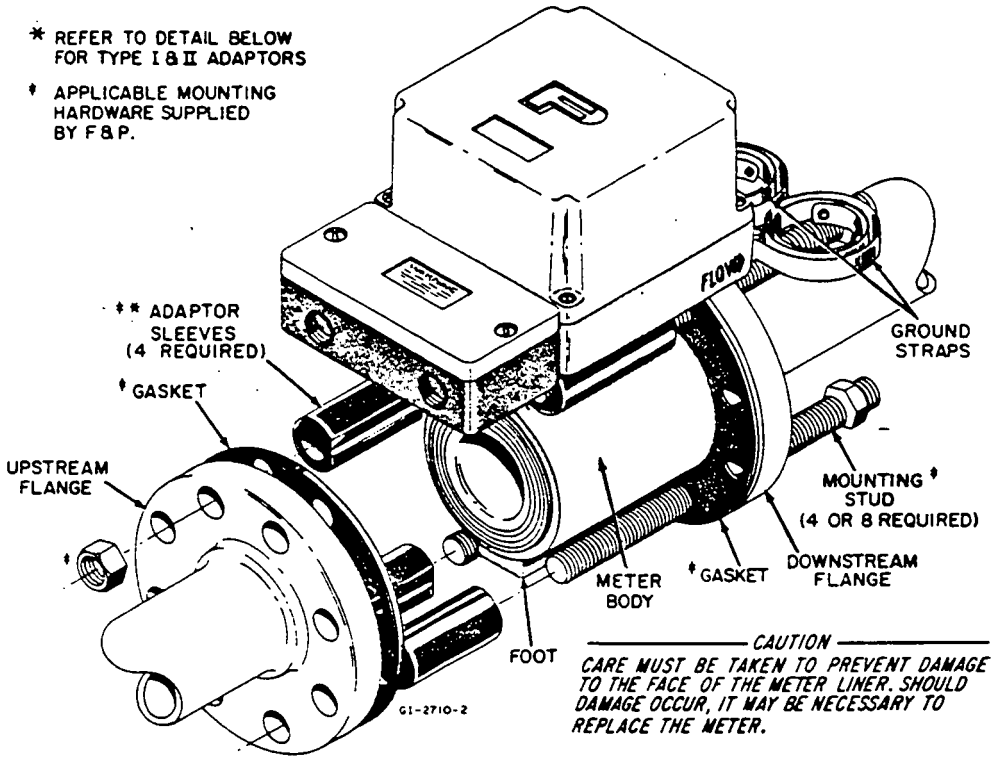

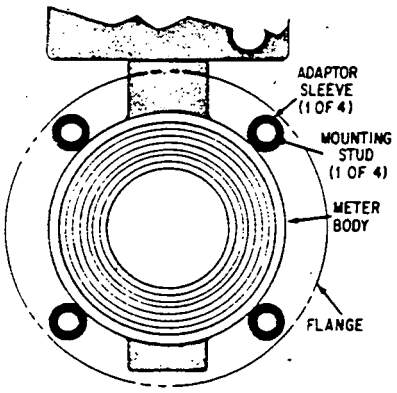

4-BOLT FLANGE PATTERN
(ADAPTOR SLEEVE, TYPE I)

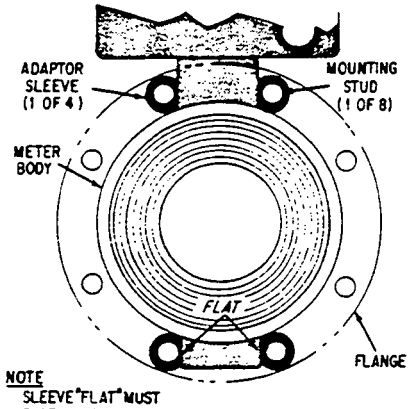

NOTE
SLEEVE "FLAT" MUST FACE FLAT SURFACE ON METER BODY

8-BOLT FLANGE PATTERN
(ADAPTOR SLEEVE, TYPE II)

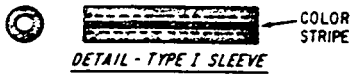

DETAIL - TYPE I SLEEVE

G1-2711-1

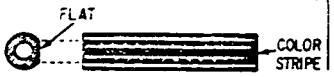

DETAIL - TYPE II SLEEVE

TYPE I ADAPTOR SLEEVES

METER SIZE	FLANGE RATING	COLOR CODE	†P/N
2-INCH (50mm)	ANSI CLASS 150	BLUE	U01
3-INCH (80mm)	ANSI CLASS 150	BLUE	U02
2-INCH (50mm)	BS 10 "F" & DIN 10-40	GREEN	U03
TYPE II ADAPTOR SLEEVES			
2-INCH (50mm)	ANSI CLASS 300	YELLOW	U04
3-INCH (80mm)	DIN 10-40	YELLOW	U05
4-INCH (100mm)	ANSI 150 & BS 10 "F"	YELLOW	U06
3-INCH (80mm)	ANSI 300 & BS 10 "F"	RED	U07
4-INCH (100mm)	ANSI 300	RED	U08
4-INCH (100mm)	DIN 25-40	WHITE	U09

† F&P PART No. 430E013___ (ADD U0_ FROM TABLE TO COMPLETE PART No.

NOTE: ADAPTOR SLEEVES ARE NOT REQUIRED FOR BS 10 TABLES D & E, 2", 3" AND 4" SIZES; OR FOR DIN 100 PN 10/16

FIGURE 2-5. MOUNTING DIAGRAM FOR 50 - 100 mm (2 - 4") SIZES

000190

4. Slip an adaptor sleeve* on both of the mounting studs, and then install the other gasket required. The two mounting studs can now be guided through the clearance holes in the downstream (typical) gasket and its associated flange.

5. Place the MINI-MAG Magnetic Flowmeter between the two flange gaskets, with the meter body foot piece (opposite the neck) being seated between the two adaptor sleeves. The meter must be oriented in accordance with the flow direction arrow.

Note that in pipelines with 8-bolt flange patterns (Figure 2-5, Detail "II") the adaptor sleeves required (Type II) have a "flat" machined surface with color strip. This flat surface must face the flat part of the meter body foot (and neck) to permit the meter to be seated properly.

6. Install the two upper mounting studs and adaptor sleeves as shown in Figure 2-5. Note that when the sleeves are properly located, only four adaptor sleeves are needed for positioning the meter. In systems with an 8-bolt flange pattern, insert the four remaining mounting studs through the clearance holes in the upstream and downstream flanges.

7. Thread nuts on both ends of the 4 (or 8) mounting studs, finger-tight.

8. As the meter body is positioned properly by the adaptor sleeves, it is only necessary to tighten the stud nuts to complete the mounting procedure. Tighten the nuts in an alternate pattern (e.g., 1-3, 2-4) and in even increments; to produce an even pressure distribution around the flange faces. Bolt torque should be limited to that sufficient to produce a positive seal for the application.

*Exception: Adaptor sleeves are not required for type BS 10 - Table D or E flanges in 50 - 100 mm sizes, or for DIN PN 10/16 in 100 mm size.

2.4 Grounding Procedure

2.4.1 General

Satisfactory operation of the Magnetic Flowmeter system requires that careful attention be paid to proper grounding techniques. Meter grounding requirements are really a combination of standard grounding methods and a bonding of the meter body to the process liquid. The most important of these is the process bonding, which is nothing more than insuring that the meter ground is in contact with the process liquid at both ends of the meter body. Basically, the bonding procedure places an electrical short circuit across the meter, thereby routing any stray current around the meter (rather than through it).

There are two basic types of piping systems. One of these is an electrically conducting pipeline in which the process liquid comes in contact with the conductive pipe. This piping requires only that the MINI-MAG bonding wires be attached to the adjacent pipe flanges. In the other case, the pipeline may be made of an electrically non-conductive material or is lined with a non-conductive material. These nonconductive pipelines require the use of metal grounding rings to bond the process liquid to ground.

A good ground is one that is in contact with the earth over a large conductive area. An excellent example of this is an iron cold water pipe that is buried in the earth for a considerable distance in its distribution system. The water pipe laterals form a large conductive area of contact, that in turn provides a low resistance connection to earth. Some systems in use today use plastic pipe and do not provide a good ground system.

Select the grounding procedure applicable from Paragraphs 2.4.2 or 2.4.3 that follow. Proper grounding of the Magnetic Flowmeter is required for optimum system performance.

2.4.2 Conductive Pipeline

If the flowmeter is included as part of a conductive pipeline that is not electrically insulated from the liquid to be metered, the following grounding procedure should be followed. Refer to Figure 2-6 to supplement the text.

1. Drill and tap a blind hole on the peripheral surface of each of the two adjacent pipeline flanges (see Figure 2-6 INSET). These tapped holes should be placed so that they are within easy reach of the bonding straps (2 supplied) attached to the ground lug on the meter housing.

2. Obtain a bright metal surface around the edges of both tapped holes with a file or burnishing tool.

3. Clamp the end of each bonding strap to the adjacent pipe flange, using a pair of 1/4" hex head bolts and external tooth lockwashers (supplied by user).

4. The user must supply a sufficient length of grounding wire for connecting the meter grounding post (ring lug supplied) to a good electrical ground. (Number 12 AWG, or heavier, copper wire may be used for this grounding wire.)

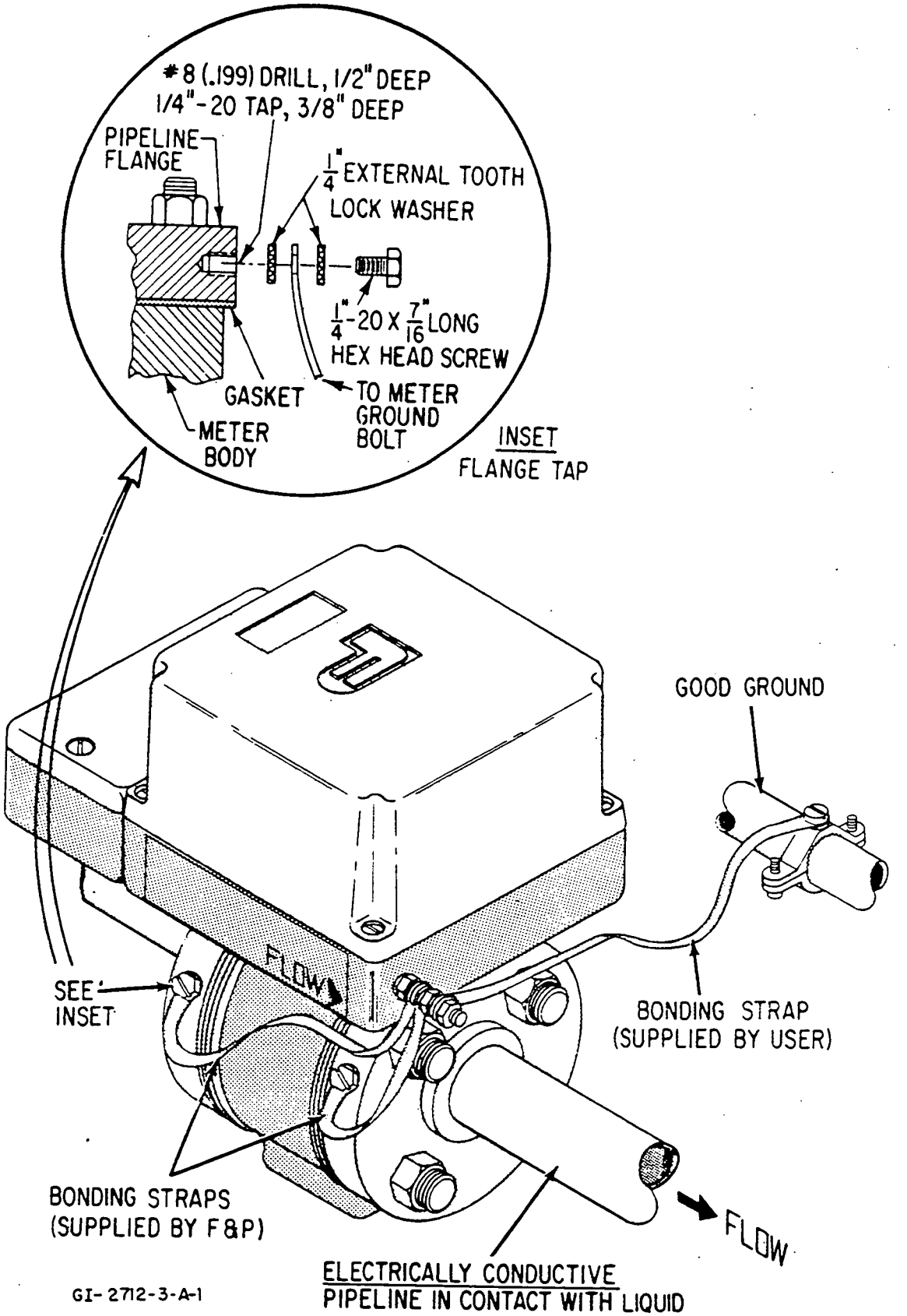

FIGURE 2-6. GROUNDING PROCEDURE, NON-INSULATED PIPE

TABLE 2-1. ANSI CLASS 125/150 GROUNDING RINGS

METER SIZE		F&P PART	PART NUMBER SUFFIX (Material)			
mm	inch	NUMBER *	316 sst	Hast. "C"	Hast. "B"	Alloy 20
3 - 15	1/10 - 1/2	800D508	U01	U09	U34	U27
25	1	800D508	U02	U10	U18	U24
40	1-1/2	800D508	U03	U11	U35	U28
50	2	800D508	U04	U12	U20	-
50	2	800D575	-	-	-	U07
80	3	800D508	U05	U13	U36	-
80	3	800D575	-	-	-	U08
100	4	800D508	U06	U14	U37	-
100	4	800D575	-	-	-	U09

*Add suffix to basic part number to complete grounding ring part number; e.g., "800D508U02" for 1 set (2), 25 mm (1"), 316 sst grounding rings.

2.4.3 Non-Conductive or Insulated Pipeline

For the F&P Magnetic Flowmeter mounted in a non-conductive or liquid insulated pipeline (such as totally plastic pipe, ceramic lined iron pipe, or cast pipe with internal bitumastic coating), perform the grounding procedure outlined below. Refer to Figures 2-7 and 2-8 to supplement this discussion.

1. Obtain a pair of grounding rings (ref: TABLE 2-1) for mounting between the meter and the upstream and downstream pipe flanges. These metal grounding rings are available in various corrosion resistant materials and should be selected to be compatible with the process liquid. The grounding rings available from F&P resemble orifice plates that have been modified to facilitate connection of a grounding lead. When installed, these rings are centered by the flange bolts and therefore must be selected according to the flange rating.

000194

2. When installing the meter in the pipeline, place a grounding ring at both the inlet and outlet connections of the Magnetic Flowmeter. Provide standard gasketing between the face of the meter liner and the ground ring and the adjacent pipe flange; i.e., four gaskets required. Position the grounding rings in the pipeline so that the meter grounding straps (2) attached to the meter ground post will easily reach the ground strap connection bolt on the respective grounding ring.

3. Clamp the free end of the two bonding straps (shortest strap to downstream grounding ring) to the applicable grounding ring; using 1/4" hex head bolt and external tooth lockwasher (supplied with the grounding rings when rings are ordered from F&P).

4. The user must supply a sufficient length of grounding wire for connecting the meter grounding post (ring nut supplied) to a good electrical ground. (Number 12 AWG, or heavier, copper wire may be used for this grounding wire.)

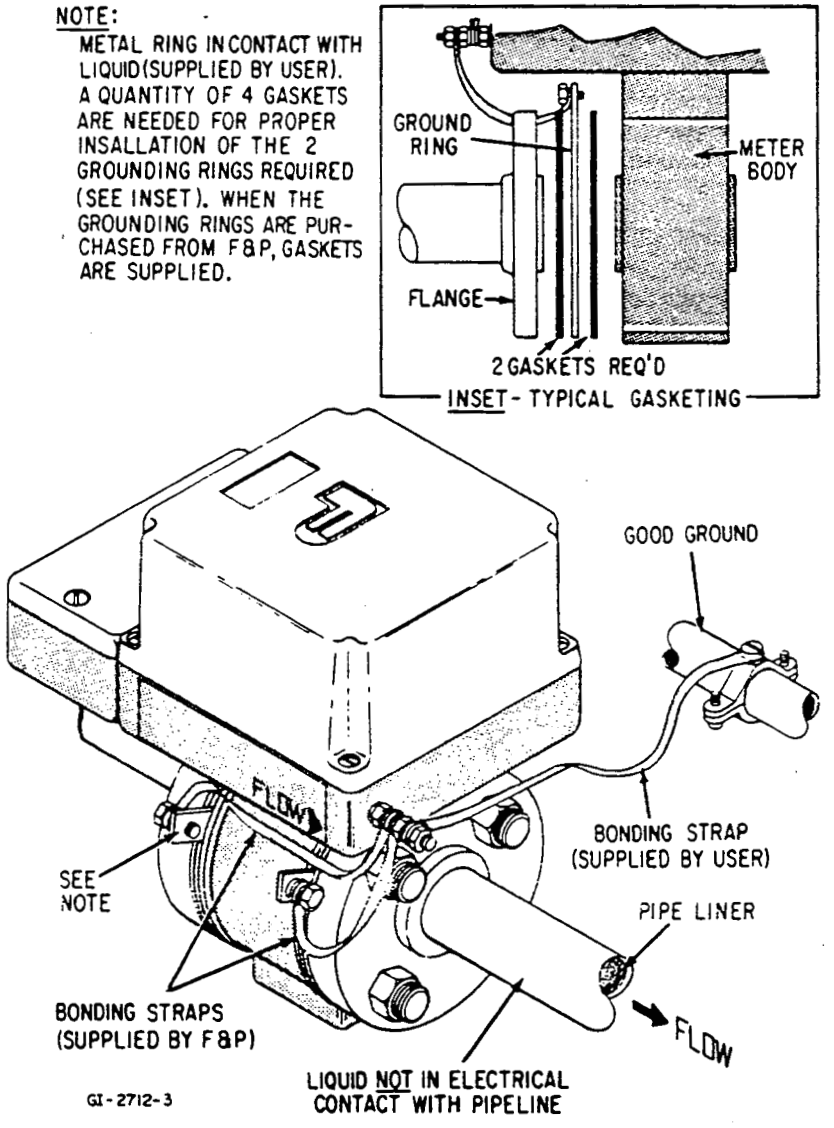

FIGURE 2-7. GROUNDING PROCEDURE, INSULATED PIPE

2.5 Electrical Interconnection

The Series 10D1475 MINI-MAG Magnetic Flowmeter may be furnished with either an integral or remote mounted (optional) Signal Converter. Interconnection wiring is arranged differently for the two systems. Interconnection details are provided in the Instruction Bulletin supplied with the Signal Converter.

WARNING
Equipment powered by ac line voltage constitutes a potential electric shock hazard to the user. Make certain that the system power input leads are disconnected from the operating branch circuit before attempting electrical interconnections.

Regardless of the interconnection procedure required, the grounding procedures given in Section 2.4 must be followed.

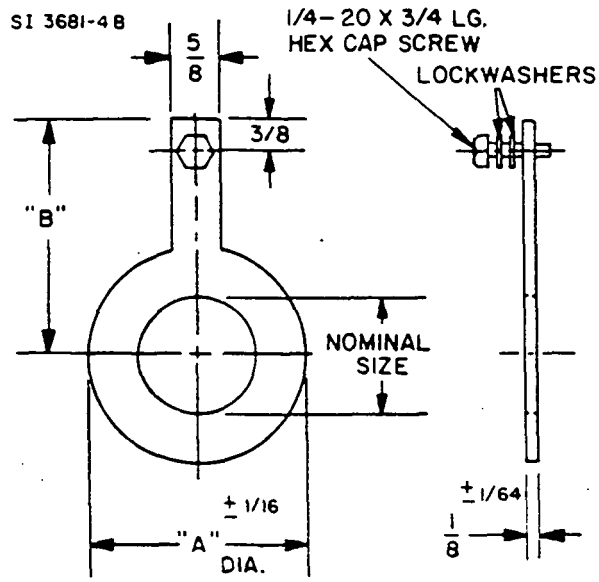

NOMINAL SIZE		ANSI CLASS 150	
mm	(inch)	"A"	"B"
15	(1/2)	1 -7/8	2 -7/8
25	(1)	2 -5/8	3 - 1/4
40	(1-1/2)	3 -3/8	3 - 5/8
50	(2)	4 - 1/8	4
80	(3)	5 - 3/8	4 - 5/8
100	(4)	6 - 7/8	5 - 3/8

(Ref: OD-10D-3627R2)

NOTES:

1. ALL DIMENSIONS IN INCHES, EXCEPT AS NOTED.
2. GENERAL TOLERANCE = ± 1/8.
3. GROUNDING RING CENTERED BY FLANGE BOLTS.

FIGURE 2-8. OUTLINE DIMENSIONS, GROUNDING RINGS

000196

3.0 START-UP and OPERATION

The F&P Series 10D1475 MINI-MAG Magnetic Flowmeter (which includes the integral or remote Signal Converter) is precision calibrated at the factory for the values stated on the instrument tag. If specific values were not specified, the meter is calibrated at some nominal maximum flow rate and for a 4-20 mA current output span. In either case, the calibration data is noted on the instrument data tag as shown in Figure 3-1. The basic primary mounted electronic components are identified in Figure 3-2.

There are no operating controls that require field adjustment unless the full scale range setting was not specified when the meter was ordered. If a change in the full scale range setting is required, refer to the Instruction Bulletin supplied with the Signal Converter. If no change is required, the equipment is ready for operation as received.

Prior to initial system start up, verify that the meter is properly installed; check flow direction, wiring interconnection and grounding as discussed in the INSTALLATION section. Particular attention should be paid to the meter grounding procedures; improper grounding may result in unsatisfactory performance.

Start flow through the process piping system that includes the meter. Allow a nominal flow through the pipeline for several minutes to purge entrapped air. The pipeline must be full for accurate flow measurement.

Apply system power to the 10D1475 Magnetic Flowmeter by closing the external switch or circuit breaker; there are no switches inside of the equipment. Also energize any auxiliary equipment associated with the flow metering system; such as remote analog recorders, controllers or rate indicators.

Initiate process flow through the pipeline. Flow measurement and concurrent output signal transmission will commence with flow through the meter. Information concerning operation of the Signal Converter is provided in the Instruction Bulletin supplied with the Converter.

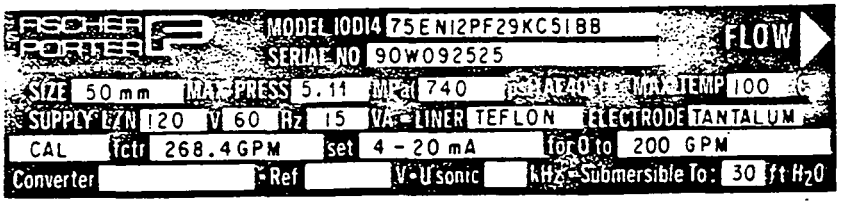

SI-6698-E

FIGURE 3-1. TYPICAL INSTRUMENT TAG

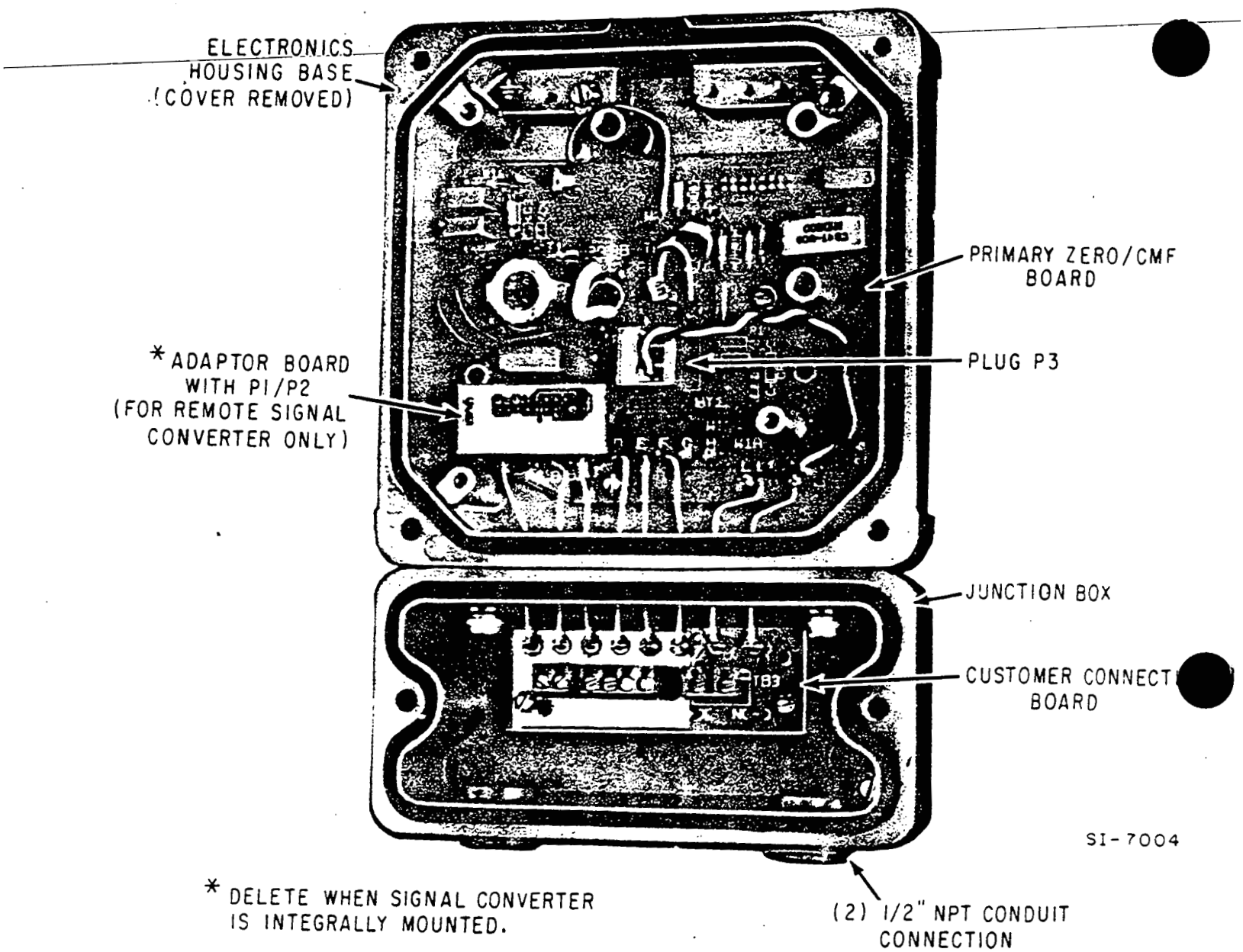

FIGURE 3-2 . PRIMARY MOUNTED PC ASSEMBLIES

000198

4.0 FUNCTIONAL DESCRIPTION

The Magnetic Flowmeter body houses two signal electrodes and the flux producing magnet coils, as shown schematically in Figure 4-1. All primary intraconnection wiring is terminated at a printed circuit assembly located in the base of the meter housing.

The primary provides two output signals to the associated Signal Converter:

- an electrode signal that contains the flow rate information
- the reference signal which is proportional to the magnet excitation current (theoretically, this reference signal is proportional to the flux density in the metering section).

The reference voltage is derived across a precision "constant meter factor" resistance network that is connected in series with the magnet coils. Changes in magnet drive voltage, which cause a variation of flow signal, will simultaneously cause a proportional variation of the reference voltage. The circuitry will provide an exact ratio and thereby provide immunity to power supply variation. The magnet coil drive circuitry is contained in the Signal Converter.

4.1 Basic Operating Principle

4.1.1 Signal Voltage Generation

The operating principle of the Fischer & Porter Model 10D1475 Magnetic Flowmeter is based upon Faraday's Law of Induction which states that the voltage induced across any conductor as it moves at right angles through a magnetic field will be proportional to the velocity of that conductor. This principle finds common application in direct and alternating current generators. Essentially, the F&P Magnetic Flowmeter constitutes a modified form of an ac generator.

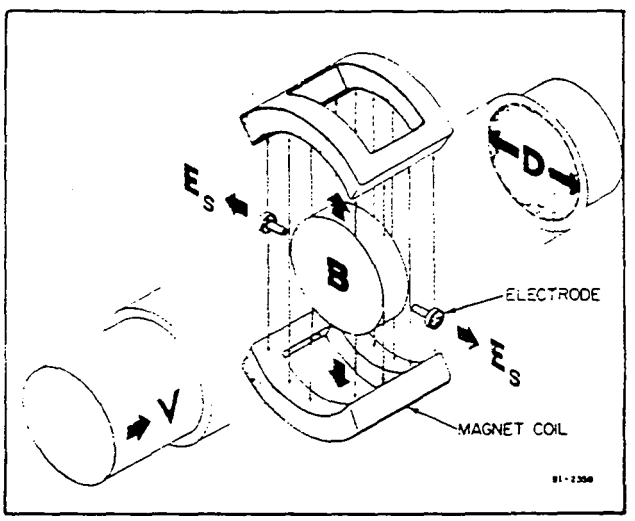

Figure 4-1 graphically illustrates the basic operating principle. A magnetic field, "B", is being generated in a plane which is perpendicular to the axis of the meter pipe. A disk of the metered liquid can be considered as a conductor. The transverse length "D" is equal to the meter pipe diameter. Since the velocity "V" of the liquid disk is directed along the axis of the meter pipe, a signal voltage, "E_s", will be induced within this liquid which is mutually perpendicular to the direction of the liquid velocity and the flux linkages of the magnetic field; i.e., in the axial direction of the meter electrodes. This electrode voltage is the summation of all incremental voltages developed within each liquid particle that passes under the influence of the magnetic field.

FIGURE 4-1. BASIC OPERATING PRINCIPLE

This may be expressed mathematically as:

(Equation #1)

$$E_S = \frac{1}{\alpha} BDV$$

where:

E_s = induced electrode voltage
B = magnetic field strength
D = meter pipe diameter
α = dimensionless constant
V = liquid velocity

Thus, the metered liquid constitutes a continuous series of conductive liquid disks moving through a magnetic field. The more rapid the rate of liquid flow, the greater the instantaneous value of signal voltage as monitored at the meter electrodes.

4.1.2 Magnet Coil Drive Circuits

In many conventional Magnetic Flowmeters the integral magnet coils are driven directly by the customer's 50/60 Hz power service. Notably, however, the design of the F&P Series 10D1475 Magnetic Flowmeter uses magnet drive circuits which are alternately energized bi-directionally at a low frequency rate as commanded by the associated Converter/Driver assembly.

4.1.3 Volumetric Flow Rate Measurement

The F&P Magnetic Flowmeter is a volumetric flow rate measuring instrument. This can be shown by substituting the physical equivalent of liquid velocity into equation #1 as follows:

(Equation #2)

$$V = \frac{Q}{A} = \frac{4Q}{\pi D^2}$$

Substituting for V in equation #1

$$E_S = \frac{1}{\alpha} BD \frac{4Q}{\pi D^2}$$

and solving for Q:

$$\therefore \quad Q = \frac{\pi \alpha D^2}{4} \cdot \frac{E_s}{B}$$

Since $B = \beta E_r$

and since α, D and β are constant:

000200

(Equation #3)

$$Q = \gamma \frac{E_s}{E_r}$$

where:

Q = volumetric flow rate
A = cross-sectional area
D = pipe section diameter
E_s = induced signal voltage
E_r = reference voltage
B = magnetic flux density
α = dimensionless constant
β & γ = dimensional constant
V = liquid velocity

Therefore, volumetric flow rate is directly proportional to the induced signal voltage as measured by the F&P Magnetic Flowmeter.

4.2 Operating Characteristics

4.2.1 Liquid Variables

4.2.1.1 Liquid Conductivity

The MINI-MAG Magnetic Flowmeter requires a liquid conductivity of 5 microsiemens per centimeter or higher for operation. This minimum liquid conductivity requirement is not affected by the length of the signal interconnection cable when remote mounting of the Signal Converter is required; as long as the F&P supplied interconnection cable (with driven shields) is utilized. The nominal maximum transmission distance is limited to 30 meters (100 feet), however longer distance can be accommodated (contact factory for details).

The conductivity of a given liquid, σ, may be determined experimentally under a filled meter condition, as follows:

1) Remove the Converter housing cover. Disconnect the electrode signal interconnection leads from terminals "1" and "2" of the Signal Converter. (These leads should be identified so that they will be properly reconnected.)

2) Measure the resistance between signal leads "1" and "2" with an ac ohmmeter.

CAUTION

Do not use a dc ohmmeter for this measurement as polarization effects will produce completely erroneous data.

The conductivity of the process liquid (in microsiemens/cm) may be determined from the electrode ac resistance measurement (in megohms) by substitution of values in the following equation.

$$\sigma = \frac{1}{(R_{ac} - 0.072) \times \text{Electrode Dia, in cm}}$$

where,

0.072 is the electrode barrier resistance in megohms; i.e., 36 k x $2/10^6$

Electrode diameters vary with meter size, however, the values given in Table 4-1 will serve as typical.

For example, assuming the measured ac electrode resistance (full pipe and zero flow) is 192,000 ohms and electrode diameter is 7.92 mm (0.792 cm), then

$$\sigma = \frac{1}{(0.192 - 0.072) \times 0.792} = 10.52\ \mu S/cm$$

TABLE 4-1. ELECTRODE DIAMETERS

METER SIZE	ELECTRODE DIAMETER
3 mm (1/10")	0.122 cm (0.048")
4 mm (5/32")	0.202 cm (0.079")
6 mm (1/4")	0.361 cm (0.142")
10 mm (3/8")	0.600 cm (0.236")
15 mm (1/2")	0.635 cm (0.250")
25-100 mm (1"-4")	0.792 cm (0.312")

This is above the threshold for specified measurement accuracy for the particular liquid, meter size and Signal Converter combination. Liquid conductivities at the operating temperature may also be determined from standard reference works for many pure liquids. F&P Field Engineers are equipped to determine the conductivities of special liquids at the user's site as an engineering service.

4.2.1.2 Liquid Temperature

Having established the minimum liquid conductivity requirements for a given application, any liquid which exhibits equal or higher conductivity may be metered without concern for any system compensating adjustments. However, due regard for the effect of the liquid conductivity versus temperature should be considered.

Most liquids exhibit a positive temperature coefficient of conductivity. It is possible for certain marginal liquids to become sufficiently non-conductive at lower temperatures so as to hamper accurate metering; whereas, the same liquid at higher or normal environmental temperatures may be metered with optimum results. The possibility of an adverse temperature conductivity characteristic should be investigated before attempting to meter such a liquid. Process or ambient temperatures are also limited by the meter materials specification.

Other normal effects of temperature, such as influence upon liquid viscosity and density, the size of the metering area, and the flux density of the magnetic field, have negligible or no effect upon metering accuracy.

4.2.1.3 Other Liquid Variables

Other liquid variables such as viscosity, density and liquid pressure have no direct influence on metering accuracy. Liquid density has no effect on volumetric flow rate since only the area of the meter pipe and liquid velocity are required to determine the rate of flow. Viscosity and metering pressure are restricted to physical limitations alone, such as the leakage pressure of the meter pipe flange connections.

4.2.2 Metering Characteristics

The metering pipe must be completely filled at all times for accurate results. Where there is possibility of operation with a partially filled horizontal pipeline, it is recommended that the Magnetic Flowmeter be installed in a vertical section of that pipeline such that liquid flow moves upward. A vertical installation also offers the advantage of an even distribution of liner wear in the event that solid abrasives are being carried along in the liquid stream.

The F&P Magnetic Flowmeter will measure the total amount of material passing in the liquid stream. The meter will not, for instance, differentiate between the amount of liquid and the amount of entrained gases. Also, in the case of a slurry, it will not differentiate the amount of liquid from solids. If the liquid to mixant ratio is of importance to process control, then separate measurements of the concentration of the desired medium must be made and appropriate correction factors must be applied to the Magnetic Flowmeter output.

In applications involving variable quantities of uniformly dispersed, non-conductive mixing agents, it must be ascertained that the higher concentrations of mixant will not drive the average conductivity of the liquid mixture below the minimum conductivity level for the given installation.

THIS PAGE INTENTIONALLY BLANK

5.0 CIRCUIT DESCRIPTION

5.1 Primary Signals

The Magnetic Flowmeter body houses two signal electrodes and the flux producing magnet coils, as shown schematically in Figures 5-1 and 5-2. All primary intraconnection wiring is terminated at the CMF/ZERO pc board located in the base of the meter housing.

The primary provides two output signals to the associated Signal Converter; one, an electrode signal that contains the flow rate information, and two, the reference signal which is proportional to the magnet excitation current (theoretically, this reference signal is proportional to the flux density in the metering section). The reference voltage is derived across a precision "constant meter factor" resistance network that is connected in series with the magnet coils. Changes in magnet drive voltage, which cause a variation of flow signal, will simultaneously cause a proportional variation of the reference voltage. The circuitry will provide an exact ratio and thereby provide immunity to power supply variation. The magnet coil drive circuitry is contained in the Signal Converter.

The (gated) magnet driver operates at a frequency that permits magnetic flux in the primary to reach a steady state level during the last 50% of each half period of magnet excitation. By using sampling techniques, the flow (differential mode) signal is measured only during the intervals that magnetic flux is constant $\left(\frac{d\phi}{dt} = 0\right)$

Therefore, zero instability due to changing flux is eliminated by use of the MAG-X design concept (sampling technique), providing a meter totally free of zero drift. A thorough discussion of Signal Converter operation is provided in the Instruction Bulletin supplied with the particular Signal Converter.

5.2 Constant Meter Factor (CMF) PC Assembly (686B623)

The CMF Assembly provides several functions. These include:

1. Establishes interconnections between the primary internal wiring and the secondary.

2. Permits adjustment of meter calibration factors to a fixed value for each nominal size primary.

3. Permits adjustment of primary zero.

4. Establishes proper wiring connections for integrally or remotely mounted Converters.

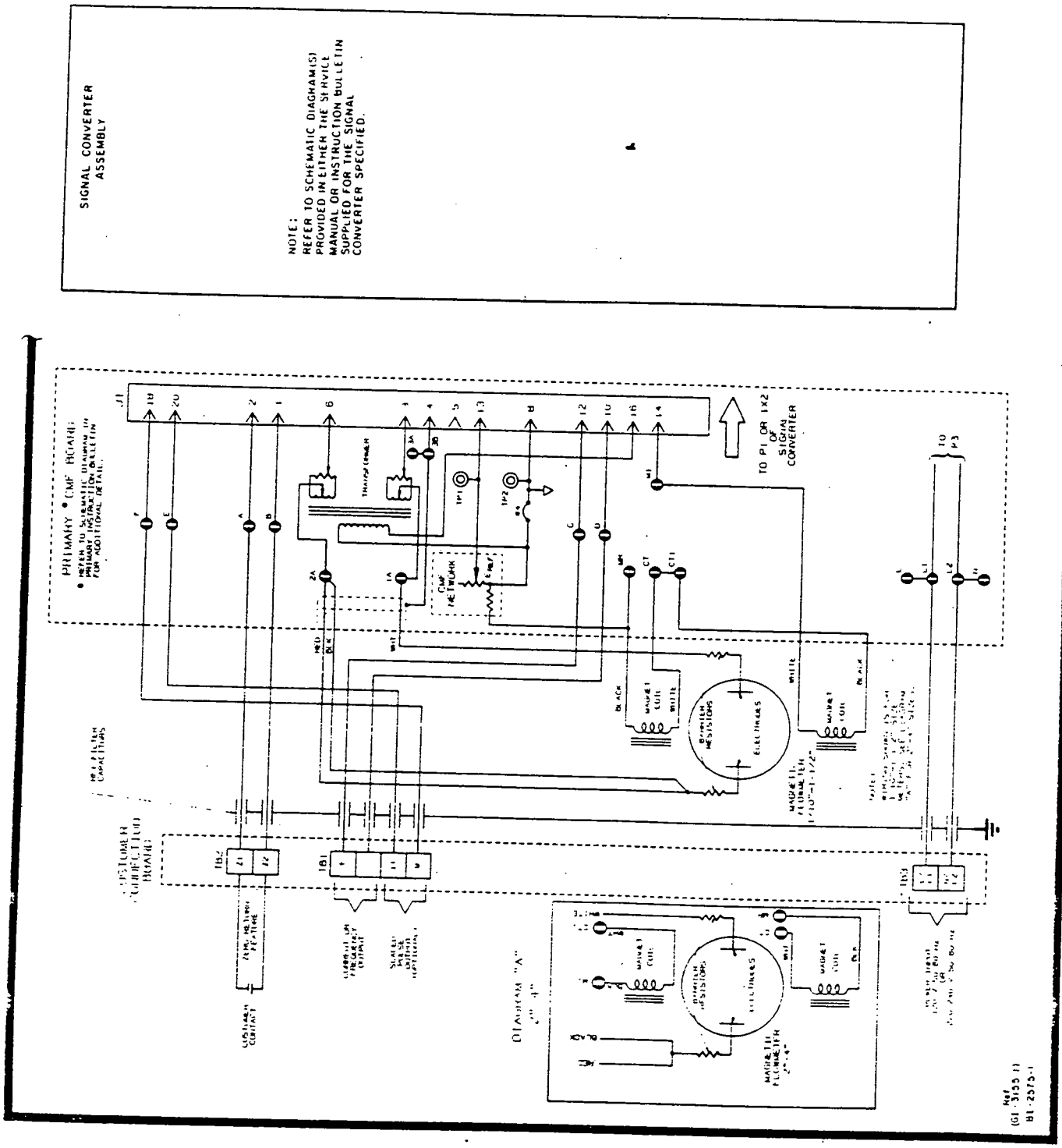

FIGURE 5-1. SCHEMATIC for PRIMARY W G WHEN USING INTEGRAL CONVERTER

000206

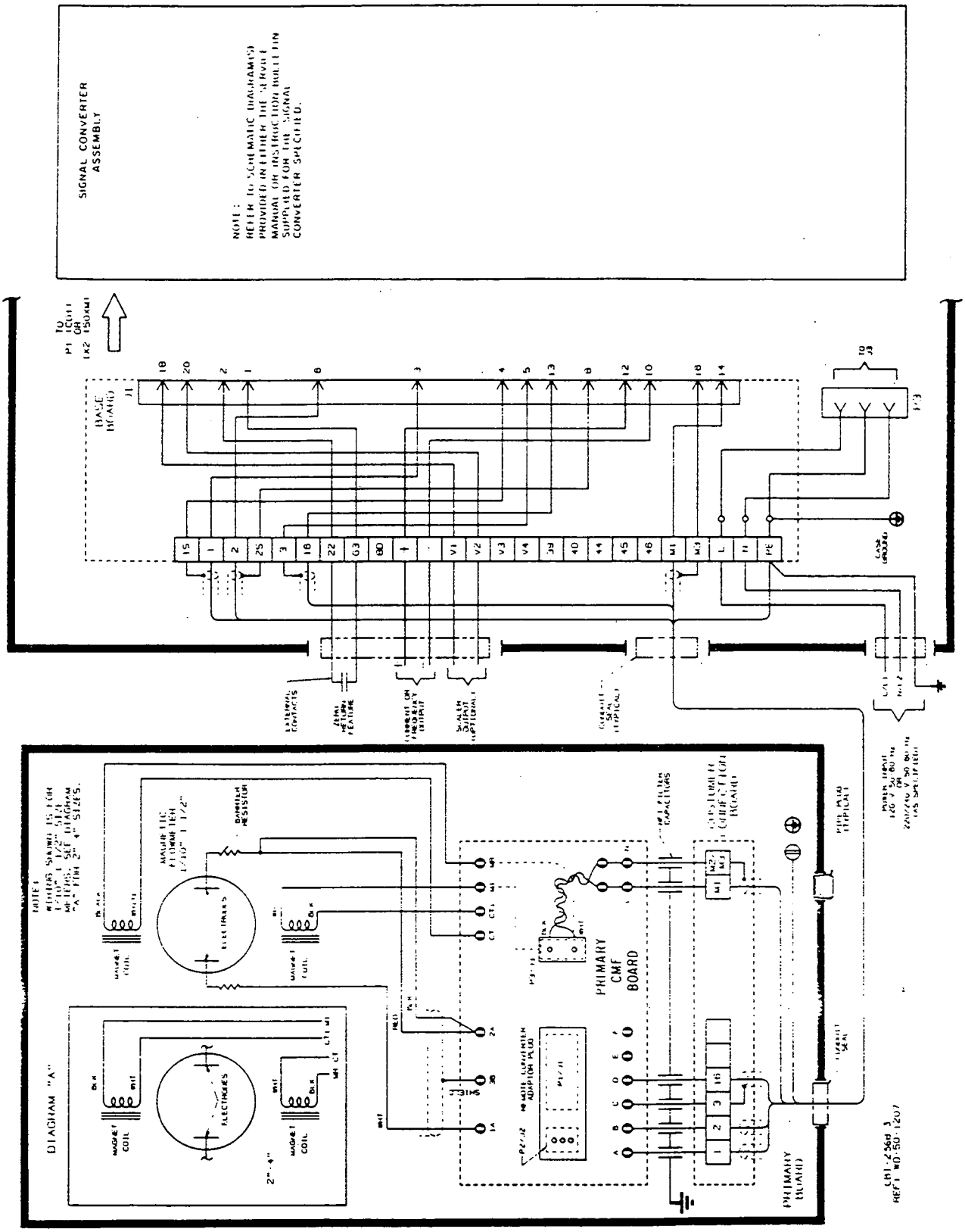

FIGURE 5-2. SCHEMATIC for PRIMARY WIRING WHEN USING REMOTE CONVERTER

A circuit schematic of the primary CMF board is shown in Figure 5-3. The meter calibration factor is established by a voltage division off the R5 current sensing resistor, first by a coarse network consisting of R6 through R12, and then by a fine adjustment via potentiometer R14. These values may only be re-established by noting the open positions of shunt S1 and measuring (out of circuit) the values of R14 (each end to wiper) and R15.

System zero is established with the aid of transformer T1, through whose primary winding the magnet coil current flows. The center tap connection of the respective secondary windings of T1 are connected in series with each electrode signal.

One secondary winding removes from electrode signal 2 the voltage impulse which occurs as a result of coil voltage reversal (see waveform). This signal is factory adjusted to a minimum, using an oscilloscope connected to the input amplifying system of the Converter. The adjustment is very sensitive and thus extreme care must be exercised when setting potentiometer R3.

Electrode circuit 1 receives a signal from the other secondary winding, and is integrated via capacitor C2 and potentiometer R2 so as to produce a square wave. This adjustment removes residual offset not corrected by the previous adjustment.

Connections to the Converter are established by one of two means. For integral Converters, power is applied to receptacle P3 and signals pass through connector J1 to the Converter assembly as shown in Figure 5-1. For remotely mounted Converters, the magnet coils are driven (see inset) via the connection of J3 to P3, while the 686B630 Adaptor Board routes the reference and electrode signals to the proper positions of J1, J2, and their corresponding RFI filters. Typical wiring is shown in Figure 5-2.

For integrally mounted Converters, zero return and other options associated with the 50XM1000 Signal Converter are established by the movable jumpers at terminals B1 and A2. Refer to the Instruction Bulletin provided with the Signal Converter for interconnection wiring.

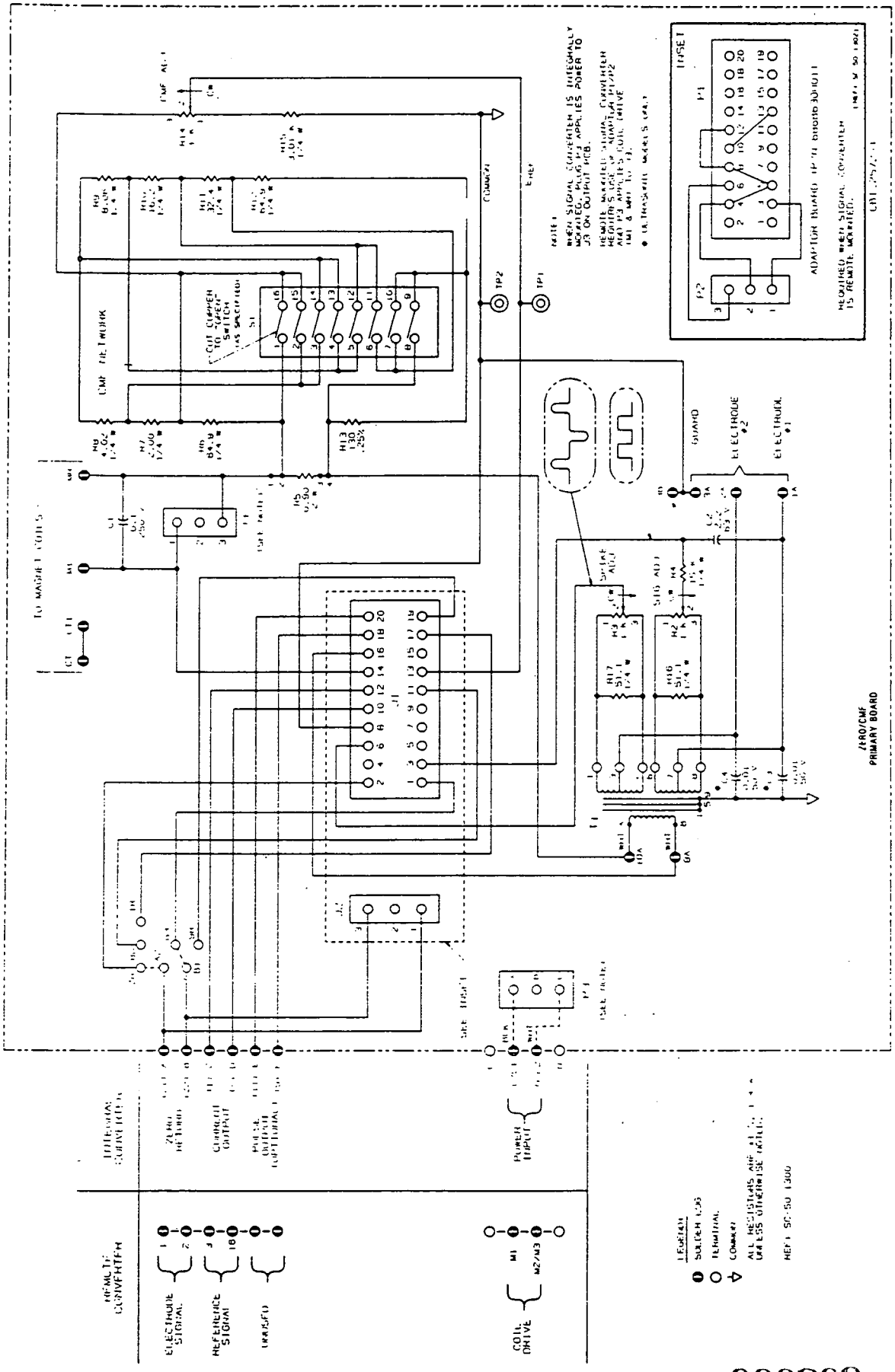

FIGURE 5-3. SCHEMATIC for CMF BOARD

000209

THIS PAGE INTENTIONALLY BLANK

6.0 MAINTENANCE

6.1 General

Except for an occasional performance verification check, there is no required routine maintenance for the Model 10D1475. As previously discussed, the Magnetic Flowmeter spool is of all welded construction. Therefore, in the event a malfunction occurs in the primary, the meter body must be replaced (if supplied, the integrally mounted Signal Converter Assembly is removable).

F&P offers a Repair/Exchange Program to facilitate replacement of a defective Meter or Converter Assembly. If the equipment is beyond the warranty limit, under this program a fixed price will be charged to the account of the Buyer for replacement of defective equipment with appropriate credit issued when the defective (but repairable) unit is received (charges prepaid) by F&P. The equipment available under this program is as follows:

a. the complete meter with integral Signal Converter (includes necessary installation hardware)

b. the meter and associated Primary Board (CMF/S), including the installation hardware (that is, the hydraulic portion without Signal Converter), and

c. the Signal Converter assembly alone.

The Signal Converter utilizes both IC and LSI components. Generally, due to the complexity of troubleshooting integrated circuit devices, maintenance beyond the assembly level is not recommended. Also, caution must be used when connecting test probes, as even a momentary accidental short circuit may damage or destroy an integrated circuit device. Therefore, only trained electronic technicians who are familiar with COS/MOS technology and have a background in logic and gating circuitry should be permitted to service this equipment.

In the event of a malfunction in the Signal Converter assembly, a replacement pc assembly can be quickly substituted for the defective assembly, thereby minimizing system down time. Servicing by substitution of spare assemblies is generally more economical than stocking a large variety of IC chips, transistors, diodes, etc. Also, test equipment requirements and the level of technical expertise necessary are minimized. Should any doubt arise regarding the proper procedure for solving an existing problem, it is suggested that the user contact their local F&P service facility for technical assistance.

When communicating with F&P in regard to replacement of a complete meter (with integral Converter assembly), the meter body only, or the Signal Converter assembly, it is important to refer to the complete instrument serial number to assure that the correct replacement will be supplied. The subject information is provided on the manufacturing specification sheet supplied with the Magnetic Flowmeter, and on the instrument data tags.

6.2 System Troubleshooting

In the event faulty operation of the Magnetic Flowmeter is evident, the following procedure can be used as a guide to isolate the malfunctioning device to either the primary meter or the Signal Converter. A standard V-O-M type multimeter and an oscilloscope are suitable for making the test measurements.

To supplement the following discussion refer to:

Section 5.0 CIRCUIT DESCRIPTION
Primary Signals
Primary CMF Board

Figure 5-1 Primary Wiring, Integral Converter

Figure 5-2 Primary Wiring,Remote Converter

Figure 5-3 Schematic Diagram for Primary CMF Board

Signal Converter Assembly ... refer to applicable Instruction Bulletin

WARNING
Equipment powered by an ac line voltage presents a potential electric shock hazard. Servicing of the Magnetic Flowmeter or Signal Converter should only be attempted by a qualified electronics technician.

If meter operation is suspect, proceed as outlined below

1. Remove access covers from customer junction box and electronics compartment of primary. Remove access cover from remote Signal Converter housing, if applicable. Inspect for evidence of condensate in junction box. If condensate present, de-energize system power source. Conduit seals must be used at cable entrances to prevent entry of condensate. Allow interior of junction box to dry completely before restoring system power.

2. The Signal Converter options available for use with the Magnetic Flowmeter include:
   - integrally mounted Analog Signal Converter
   - remote mounted Analog Signal Converter
   - integrally mounted Microprocessor-Based Converter
   - remote mounted Microprocessor-Based Converter

Because signal wiring and operating procedures are dependent upon the type of Converter and the mounting option selected, the user should refer to the instruction bulletin supplied with the associated Signal Converter for system troubleshooting procedures. A static performance test for the primary mounted components is discussed in part 6.3, following.

3. Possible causes of erroneous flow rate indication are:
   - incorrect grounding
   - excessive noise due to a heavy slurry process or a non-homogeneous process
   - loose or intermittent wiring
   - non-full or empty meter pipe
   - excess air entrained in process liquid

6.3 Static Test

If improper operation of the Magnetic Flowmeter is suspected, the following resistance measurements can be made to establish whether an electrical malfunction has occurred. A standard V-O-M type Multimeter is suitable for making the resistance checks. These measurements can be made at the Primary Base Board.

> **WARNING**
> **Equipment that operates from ac line voltage constitutes a potential electric shock hazard to the user. Make certain that the system power is disconnected before making the following ohmmeter checks.**

6.3.1 Magnet Coil Check

There are two magnet coils in the meter that are connected in a series arrangement. The respective coil leads are brought up to lugs "M1 and CT1" and "CT and MR" on the CMF board in the meter electronics base. (Note that terminals CT and CT1 are internally connected via printed circuit path.) Figures 5-1 and 5-2 show the actual connection method.

Before making resistance measurements, verify that the system power service has been de-energized. Remove the electronics housing cover to obtain access to the CMF board.

If a remote mounted Signal Converter was supplied, proceed to step 1). If the MINI-MAG Magnetic Flowmeter is supplied with an integrally mounted Signal Converter, loosen and remove the four screws that hold the Signal Converter to the base. Disconnect the plugs supplying signal (P1) and power (P3) connections to the Converter and set the Converter aside. This will enable access to the CMF board.

1) Set the ohmmeter to its lowest range; e.g., R x 1.

2) Connect the Ohmmeter test leads to terminal lugs M1 and CT1 on the CMF board. The value displayed should correspond to 1/2 of the value (±20%) indicated in Table 6-1.

3) Connect the Ohmmeter test leads to terminal lugs CT and MR. The value displayed should correspond to that obtained in Step 2 and 1/2 of the value indicated in Table 6-1 within ±20%.

If proper coil resistance is measured, it can be assumed that the magnet coils are functional. If the measurement indicates that either or both coils are "open" (infinite resistance), or shorted (zero resistance), the Magnetic Flowmeter must be replaced.

4) Carefully unsolder the four coil wires from the terminal lugs on the CMF pc board. Identify each wire to enable its proper reconnection.

5) Set the Ohmmeter to its highest range (R x 10,000) and measure from wire lead M1 or MR to the meter body (case ground). The resistance reading should be infinite. If this measurement is less than 100 K ohms, the meter is defective and must be replaced.

When all measurements appear normal, the coil wires can be reconnected and the meter can be returned to service. As applicable, re-install the integrally mounted Signal Converter and/or replace meter housing cover.

TABLE 6-1. PRIMARY COIL RESISTANCE

METER SIZE		COIL RESISTANCE, M1 to MR
mm	inches	(nominal, Ohms)
3	1/10	18
4	5/32	18
6	1/4	18
10	3/8	18
15	1/2	18
25	1	41
40	1-1/2	60
50	2	16
80	3	19
100	4	21

6.3.2 Electrode Check

The electrode check is essentially a resistance measurement that can be made to establish that a short (or high resistance leakage path) does not exist between one, or both, electrodes and the meter body.

Before proceeding, verify that system power has been de-energized. To perform this test, the meter must be removed from the pipeline and the meter liner "wiped" dry. When the meter liner has been thoroughly dried, proceed as follows:

1) If integral Signal Converter supplied, begin with step a), below. If remote Signal Converter supplied, begin with step b).

a) Remove meter housing cover from electronics compartment. Loosen the four mounting screws that secure the integral Signal Converter to the meter base. Disconnect plugs P1 and P3; set the Converter aside. Proceed to step 2.

b) Remove field wiring connected to electrode leads "1" and "2". Proceed to step 2). Electrode wiring is shown in Figure 5-1 and 5-2, as applicable.

2) Place Ohmmeter on highest available range (for example, R x 10,000).

3) Connect the Ohmmeter "minus" lead to the meter ground stud and the "plus" lead to electrode line 1. This reading should be infinite. If any resistance can be measured, the meter is defective and must be replaced.

4) Check the other electrode by connecting the Ohmmeter "plus" lead to line 2. This reading must also be infinite. If any resistance can be measured, the meter is defective and must be replaced.

5) If measurement of both electrodes indicate an infinite resistance reading, the meter may then be returned to on-stream operation after wiring has been restored. Re-install the integrally mounted Signal Converter, if applicable, and replace housing cover.

IMPORTANT NOTE

If the Signal Converter has been removed from the housing, use care when reconnecting the Converter interface cable to ensure that plug P1 is in proper alignment with the pins of receptacle J1. (J1 is located on the base board in either the primary or the remote Converter housing, as the case may be.) If these connectors do not mate correctly, the Signal Converter will be inoperable and could be damaged when power is applied.

6.3.3 Primary CMF Board

Ref: Schematic Diagram of CMF Board, Figure 5-3.

The Primary Board is located in the base of the electronics housing as shown in Figure 6-1. This pc board includes the constant meter factor/size network (CMF/S). The CMF/S network is utilized to standardize the particular flowmeter; i.e., provide a meter CAL FACTOR that will be the same for all meters of the same size.

The CMF/S network is factory set by precise calibration prior to shipment. Further, this calibration procedure (used to establish the exact setting for the particular CMF/S network) also compensates for variations resulting from manufacturing tolerances. Hence, the value of CMF/S network on each primary board is unique and may be applicable only for the particular flowmeter for which it was supplied.

Replacement of the Primary CMF Board in the field is not recommended. Should board replacement become necessary, the following steps must be followed:

1. De-energize the Signal Converter power source (this will remove power from the primary). If applicable, remove the integral Signal Converter as discussed in 6.3.2.

2. Before removing the CMF Board, it will be necessary to unsolder the 8 leads from the RFI capacitors (see Figure 5-1), plus the 3 leads from the meter electrodes, and the four wires from the magnet coils. Use care to identify all leads to ensure proper reconnection. Also, disconnect the two (lugged) ground wires.

3. When primary connections to the CMF Board have been disconnected, remove the 3 # 4-40 Board mounting screws. The CMF Board can now be removed from the meter base.

The following procedure is required to maintain the accuracy of the meter Cal Factor.

4. Potentiometer R14 and resistor R15 must be carefully removed from the old circuit assembly (note the orientation of potentiometer R14). If they are in usable condition, place them into the new assembly (observe R14 orientation). If they cannot be used, then measure and record the resistance of the following components to an accuracy of 0.1%:

R15, R14 pin 1-2, R14 pin 3-2 ("2" is the wiper)

Calculate the following:

K = (R15 + R14 pin 1-2) / (R15 + R14 pin 1-2 + R14 pin 3-2)

5. Remove R14 and R15 from the replacement assembly. Measure R15 and adjust R14 to obtain the same "K" as calculated in step 4. Place R14 and R15 back into the circuit board, noting the proper orientation of R14.

6. Note which positions of shunt S1 were opened in the old CMF Board. Open the identical shunt positions of S1 in the replacement board.

7. Replace the CMF Board in the meter base and restore intraconnection wiring. As applicable, install the Adapter board (for remote mounted Signal Converter) or replace integral Converter assembly. The jumpers on the CMF board; e.g., "A2 to ZR" and "B1 to G3" (see Figure 5-3) must be configured accordingly.

IMPORTANT NOTE

If the Signal Converter has been removed from the housing, use care when reconnecting the Converter interface cable to ensure that plug P1 is in proper alignment with the pins of receptacle J1. (J1 is located on the base board in either the primary or the remote Converter housing, as the case may be.) If these connectors do not mate correctly, the Signal Converter will be inoperable and could be damaged when power is applied.

8. A zero flow, full pipe condition in the primary must now be established and the system powered. An oscilloscope must be connected to TP5 (TP1 com.) of a CD-1 Converter or TP103 (TP101 com.) of the XM Converter. CD-1 Converters must be set to a 1 ft/sec range and placed into self-test (elevated). R3 of the CMF assembly must be adjusted for a peak to peak waveform value of less than 2 volts (CD-1) or 0.2 volts (XM). For integrally mounted Converters, it will be necessary to place an insulator under the Converter and set it on the lip of the meter housing to permit access for adjustment of the CMF Board.

9. After R3 has been adjusted, R2 is to be set so that the Converter output is zero. For CD-1 Converters, the Converter must be elevated on a 1 ft/sec span and R2 then set to obtain 74.3% output (+/- 0.2%). For microprocessor-based Converters, the Converter must be placed in the bidirectional mode, low flow cutoff set to zero, and R2 set so that indication on the rate display toggles between forward and reverse.

10. Following completion of steps 4 through 9, the system may now be returned to normal operation.

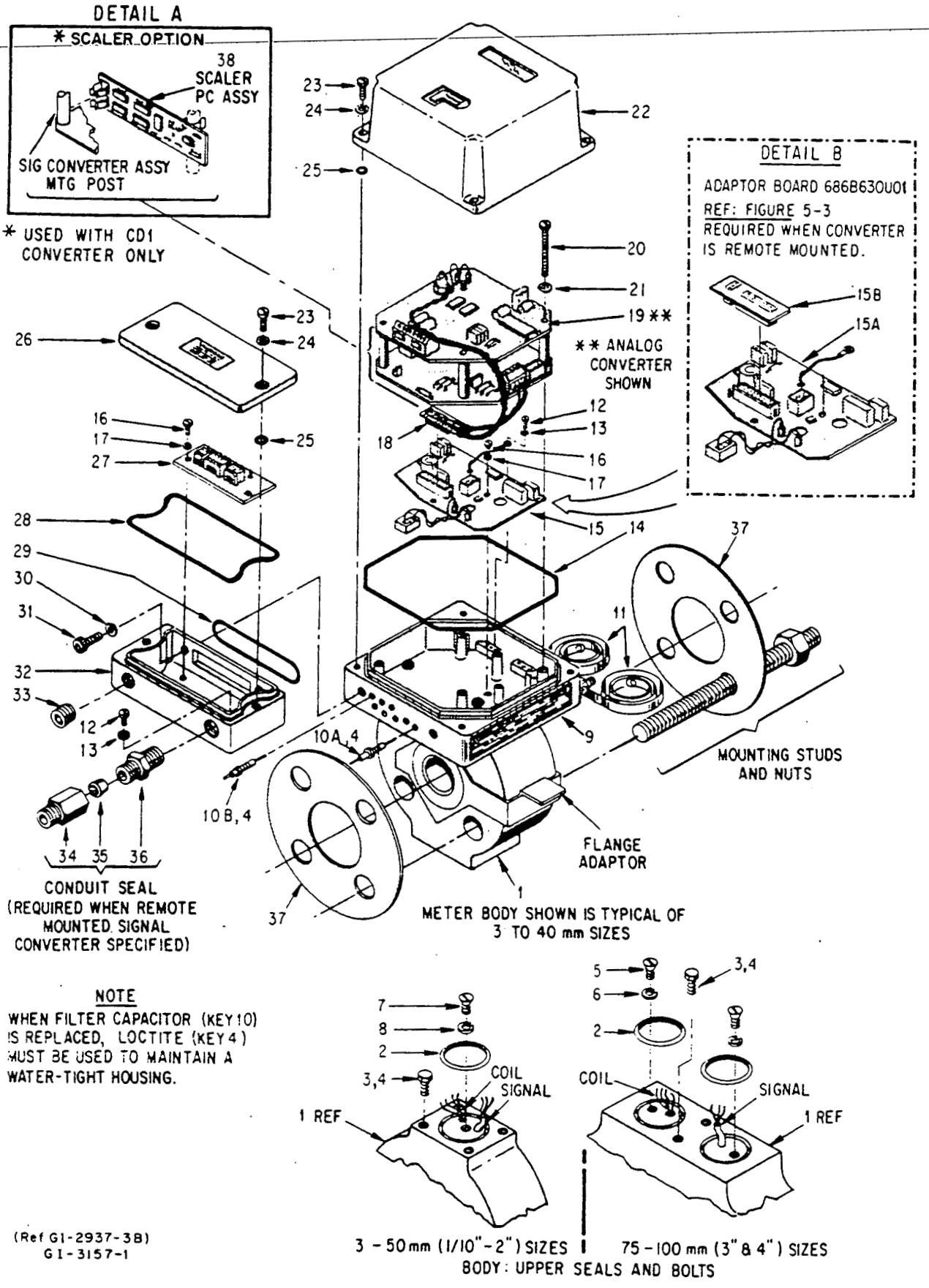

FIGURE 6-1. EXPLODED VIEW, BASIC FLOWMETER PARTS

000218

7.0 PARTS LIST

7412

BASIC METER PARTS
(Ref.: FIGURE 6-1)

KEY	QTY	DESCRIPTION	SIZE, mm	PART NUMBER
1	1	METER BODY: SEE NOTE 1		N/A
2	1	O-RING: Converter Base Seal	3 - 25	101A927U01
	1		40 - 50	101A937U01
	2		80	101A922U01
	2		100	101A927U01
3	2/4	BOLT, Self Sealing		091B022U01
4	-	LOCTITE, Type 271		145A016U02
5	2	SCREW, Flat Hd: 1/4-20 x 1/2"		032B008T10
6	2	WASHER, Csk: M6		85G027KU05
7	1	SCREW, Flat Hd: #8-32 x 1/4"	3 - 25	002K004T10
		#10-32 x 5/16"	40 - 50	002L005T10
8	1	LOCKWASHER, Csk, Ext. Tooth #8	3 - 25	085M008V11
		#10	40 - 50	085M010V11
9	1	BASE, Converter	3 - 25	610B249U03
			40 - 50	610B249U04
			80	610B249U05
			100	610B249U06
10A	2	FILTER CAPACITOR ASSY (RFI), 100 pF, 120 V ac		C160C102U01
10B	6	FILTER CAPACITOR ASSY (RFU), 1000 pF, 500 V dc		160C055U01
11	2	GROUND STRAP		355A422U01
12	2	SCREW, Pan Hd: #6-32 x 1/4"		006H004T10
13	2	LOCKWASHER, Ext. Tooth: #6		085H006V11
14	1	SEAL RING, Cover		102E077U52
15A	1	PRIMARY BOARD, Converter Base (CMF) (See NOTE 5)		6868623U01
15B	1	ADAPTOR BOARD (for remote Converter)		6868630U01
16	5	SCREW, Pan Hd: #4-40 x 1/4"		006F004T10
17	5	LOCKWASHER, Ext. Tooth: #4		085H004V11
18	1	CABLE ASSEMBLY: CD1 Converter*		6868631U01
19	1	SIGNAL CONVERTER ASSY: SEE NOTE 2		
20	4	SCREW, Pan Hd: #6-32 x 2-1/4"		006H228T10
21	4	LOCKWASHER, Int Tooth: #6		085F006V11
22	1	COVER, Converter Base: w/o Window		379D358U01
		with Window		D612A083U01
23	6	SCREW, Pan Hd: #10-32 x 3/4"		006L012T10
24	6	LOCKWASHER, Ext Tooth: #10		085D010T10
25	6	O-RING, Screw Retainer		333C596U01
26	1	COVER, Customer Connection Box		C379D371U01
27	1	PC BOARD, Customer Connection Box		C6868624U01
28	1	SEAL RING, Customer Connection Box		C102G002U02
29	1	O-RING, Connection Box to Converter Base		101A001U08
30	2	LOCKWASHER, Ext Tooth: 1/4"		085H416T10
31	2	SCREW, Hex Soc Hd: 1/4-20 x 7/8"		038B014T10
32	1	CUSTOMER CONNECTION BOX:		C323D416U02
33	1	PIPE PLUG: 1/2" NPT SEE NOTE 3		112A352U22
34	1	FITTING, Pipe SEE NOTE 3		364D297U01
35	1	GROMMET SEE NOTE 3		368D145R90
36	1	FITTING, Pipe SEE NOTE 3		364D257U01
37	2	GASKET, Full Face, 1/16": See TABLE 7-2		
38	1	SCALER BOARD: (Option)**		
		10 Hz max range		6868518U02
		10 kHz max range		6868518U03

NOTES:

1. Meter body (Key 1) is a welded assembly and is not a repairable item. F&P maintains a repair/exchange program so that the entire meter or the Signal Converter alone, can be replaced with a minimum of down time; contact your local F&P field office for details. To order specify either a new or repair/exchange Meter or Signal Converter, as required. All correspondence should reference the complete instrument model number and serial number.

2. The same Signal Converter is used for integral or remote mounting. Refer to the Instruction Bulletin supplied for the Signal Converter model specified for the applicable replacement part number. F&P maintains a repair/exchange program for this assembly; simply add "RE" to the part number given in the IB. For example: 50CD9001 - PN 698B076U65RE.

3. Pipe plug (Key 33) and conduit seal (Keys 34, 35 & 36) are not used when Signal Converter is integrally mounted. Parts are supplied with signal cable, when specified.

4. Mounting hardware and gaskets (supplied by F&P) are selected according to meter size.

5. The Primary CMF Board is not interchangeable, see procedure 6.3.3 in MAINTENANCE section. It is suggested that the user return the Magnetic Flowmeter to the factory for repair and calibration, or consult an F&P service representative for assistance.

* Included with replacement Converter.
** Used with CD1 Converter only. See IB 50CD9001

7.0 PARTS LIST (continued)

TABLE 7-1. ANSI CLASS 125/150 GROUNDING RINGS

METER SIZE		PART	PART NUMBER SUFFIX (Material)			
mm	inch	NUMBER*	316 sst	Hast. "C"	Hast. "B"	Alloy 20
3 - 15	1/10 - 1/2	800D508	U01	U09	U34	U27
25	1	800D508	U02	U10	U18	U24
40	1-1/2	800D508	U03	U11	U35	U28
50 50	2 2	800D508 800D575	U04	U12	U20	U07
80 80	3 3	800D508 800D575	U05	U13	U36	U08
100 100	4 4	800D508 800D575	U06	U14	U37	U09

*Add suffix to basic part number to complete part number; e.g, "800D508U02" for 1 set (2), 25 mm (1"), 316 sst grounding rings.

TABLE 7-2. GASKETS (2 Required)

Klinger Sil C-4401 ---- + Part Number 333J089U__
Teflon ---------- + Part Number 333J092U__

FLANGE RATING	METER SIZE, mm/inch						
	3 - 10	15	25	40	50	80	100
	1/10-3/8	1/2	1	1-1/2	2	3	4
ANSI CLASS 150	U01	U01	U10	U15	U19	U22	U29
ANSI CLASS 300	U02	U02	U11	U16	U25	U26	U30
BS 10 TABLE D	U02	U02	U12	U15	U20	U23	U24
BS 10 TABLE E	U02	U02	U12	U15	U20	U23	U31
BS 10 TABLE F	U02	U02	U13	U17	U21	U27	U29
DIN PN 10/16	U03	U03	U14	U18	U21	U28	U32
DIN PN 25/40	U03	U03	U14	U18	U21	U28	U33

+ Add suffix from Table to complete part number; e.g., 333J089U01 for ANSI Class 150 Klinger Sil gasket.

THIS PAGE INTENTIONALLY BLANK

THIS PAGE INTENTIONALLY BLANK

000222

7412

DOCUMENTATION QUESTIONNAIRE

Your answers to the questions below and other comments assist us in publishing better documentation. If an answer requires explanation please use space provided. All comments and suggestions become the property of Fischer & Porter Co.

1. Title of Document? IB 10D1475E/P, Pub. No. 24332

2. Does this document meet your needs? _____

3. Is the information: _____

   Easily understandable? _____

   Properly organized? _____

   Complete? _____

   Sufficiently illustrated? _____

OTHER COMMENTS

(Please include page and/or figure number.)

_____

Name _____

Address _____

No postage necessary if mailed in U.S.A.

If F&P employee, please include department number.

FORM NO 265-304

000223

DETACH, FOLD, STAPLE

FOLD 1

NO POSTAGE NECESSARY IF MAILED IN THE UNITED STATES

BUSINESS REPLY MAIL

FIRST CLASS PERMIT NO 86 WARMINSTER, PA

POSTAGE WILL BE PAID BY ADDRESSEE:

FISCHER & PORTER COMPANY
DEPT. 265
125 E. COUNTY LINE ROAD
WARMINSTER, PA 18974

FOLD 2

000224

STAPLE HERE

FISCHER & PORTER

problem solving in depth

Worldwide Sales & Service*

AUSTRALIA
Fischer & Porter Pty. Ltd.
474-478 Princes Highway
Noble Park, Victoria 3174
Australia
(03) 795-0255

AUSTRIA
Fischer & Porter Ges.m.b.H
Wiener Strasse 17
A-2351 Wiener Neudorf
Austria
(02236) 88761

BELGIUM
Fischer & Porter N.V.
Elektronikalaan 12/14
B-2610 Wilrijk
Belgium
(03) 828 0511

CANADA
Fischer & Porter (Canada) Limited
134 Norfinch Drive
City of North York
Ontario, Canada, M3N 1X7
(416) 667-9800

ENGLAND
Fischer & Porter Ltd.
Salterbeck Trading Estate
Workington, Cumbria CA14 5DS
England
(0946) 830611

FINLAND
Fischer & Porter Oy
Kuunkehra 2
02210 Espoo 21
Finland
(0) 803 6066

FRANCE
Otic-Fischer & Porter
151 bis, Avenue de la Liberation
63000 Clermont-Ferrand
France
(73) 93 84 10

ITALY
Fischer & Porter Italiana, S.p.A.
P.O. Box 44, Via Gorizia 16
20063 Cernusco sul/Naviglio
Milan, Italy
(02) 92771

MEXICO
FISPO, S.A.
Apdo Postal M-9397
Mexico 1, D.F., Mexico
(5) 576-1033

NETHERLANDS
Fischer & Porter B.V.
Avelingen West 3
4202 MS Gorinchem
Netherlands
(01803) 34811

SPAIN
Fischer & Porter Iberica, S.A.
Sanchez Pacheco, 79
Madrid 28002
Spain
(91) 415-2200

SWEDEN
Fischer & Porter AB
Malmgardsvagen 16-18
Box 11124
S-100 61 Stockholm 11
Sweden
(08) 23 42 15

UNITED STATES
Fischer & Porter Company
125 E. County Line Rd.
Warminster, PA 18974
U.S.A.
(215) 674-6000

GERMANY
Fischer & Porter GmbH
Postfach 1843
D-3400 Goettingen
Germany
(0551) 905-0

*Contact any of our companies for the name of our representative in your area.

FISCHER & PORTER Worldwide Headquarters, County Line Road, Warminster, Pennsylvania U.S.A.
1-800-829-6001 in U.S.

Fischer & Porter Company is an equal employment opportunity employer

Pub. 24332
Printed in U.S.A.
12/94 APG 2000

ATTACHMENT C3

INSTRUCTION BULLETIN MAGNETIC FLOW METERS 50XM 1000

7412

BAILEY FISCHER & PORTER

a unit of Elsag Bailey Process Automation

INSTRUCTION BULLETIN
MAGNETIC FLOWMETERS
50XM1000 Design Level B
Rev. 1

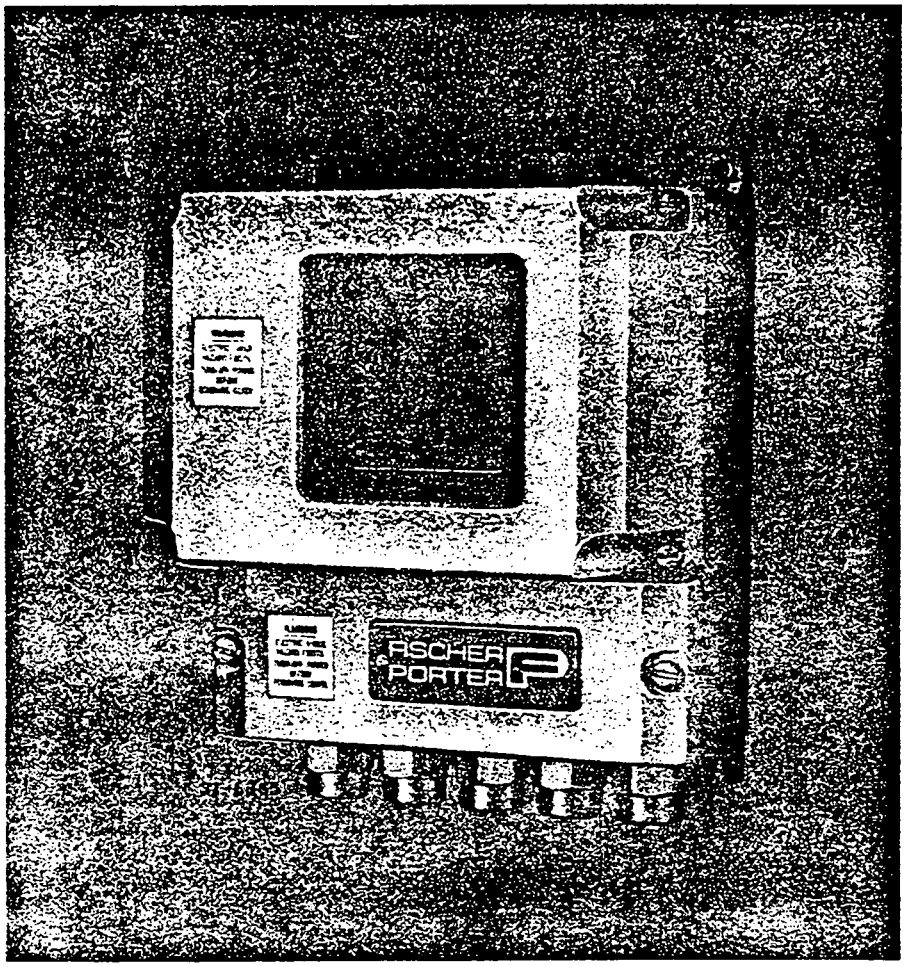

000227

Pub. 24584

The following are trademarks of Fischer & Porter Company:

DCI SYSTEM SIX®
MAG-X®
MICRO-DCI™
SUPERVISOR™
SUPERVISOR-PC™

The following are trademarks of International Business Machine Corporation:

IBM®
IBM PC AT™
IBM PC XT™

The following is a registered trademark of Littelfuse Tracor Inc:

LITTELFUSE®

The following is a registered trademark of Rosemount Inc:

HART®

Read these instructions before starting installation; save these instructions for future reference.

All software, including design, appearance, algorithms and source codes, is copyrighted by Fischer & Porter Company and is owned by Fischer & Porter Company or its suppliers.

NOTICE

The instructions given herein cover generally the description, installation, operation and maintenance of subject equipment. Fischer & Porter reserves the right to make engineering refinements that may not be reflected in this bulletin. Should any questions arise which may not be answered specifically by these instructions, the questions should be directed to Fischer & Porter for further detailed information and technical assistance. The material in this manual is for informational purposes and is subject to change without notice. Fischer & Porter Company assumes no responsibility for any errors that may appear in this manual.

Copyright 1993 Fischer & Porter Company. [September 1993]

Table of Contents

1.0 INTRODUCTION **1-1**

1.1 General Description 1-1
1.2. Model Number Breakdown 1-3
1.3. Specifications 1-4

2.0 INSTALLATION **2-1**

2.1 Inspection 2-1
2.2 Location and Mounting 2-2
2.3 Electrical Interconnections 2-4
2.3.1 Integrally Mounted Signal Converter 2-4
2.3.2 Remotely Mounted Signal Converter 2-4

3.0 OPERATION **3-1**

3.1 Start-Up 3-1
3.1.1 Calibration Data 3-1
3.1.2 Flow Measurement 3-2
3.2 Configuration Procedure 3-3
3.3 Changing Parameters 3-5
3.3.1 Language 3-5
3.3.2 Meter size 3-5
3.3.3 Cal Factor/Meter Capacity 3-6
3.3.4 Range 3-6
3.3.5 Pulse Factor 3-9
3.3.5.1 Allowable Pulse Factors 3-9
3.3.5.2 Pulse Factor Summary 3-10
3.3.6 Pulse Width 3-11
3.3.7 Low Flow Cut-off 3-11
3.3.8 Damping 3-11
3.3.9 Filter 3-12
3.3.10 Density 3-12
3.3.11 System Zero Adjustment 3-12
3.3.12 Submenu - Unit 3-14
3.3.13 Submenu - Alarm 3-16
3.3.13.1 Maximum Alarm 3-16
3.3.13.2 Minimum Alarm 3-16
3.3.13.3 Error Log 3-16
3.3.13.4 Function V8, V9 3-17
3.3.14 Submenu-Current Output 3-19
3.3.15 Submenu-Data Link 3-19
3.3.16 Submenu-Self Check 3-20
3.3.17 Submenu-Detector Empty Pipe 3-23
3.3.18 Submenu Totalizer 3-25
3.3.19 Flow Indication 3-26
3.3.20 Firmware Level 3-27
3.3.21 Code Number 3-27

4.0 FUNCTIONAL DESCRIPTION 4-1

4.1 Basic Functions 4-1
4.2 Design Features 4-1
4.2.1 Micro-Processor Controlled 4-1
4.2.2 Display 4-1
4.2.3 Rangeability 4-1
4.2.4 Bi-Directional Flow 4-1
4.2.5 Flow Direction 4-2
4.2.6 Output Signals 4-2
4.2.6.1 Analog Output 4-2
4.2.6.2 Incremental Pulse 4-2
4.2.6.3 Optional Outputs 4-2
4.2.6.4 Scaled Pulse 4-2
4.2.7 Data Link 4-2
4.2.7.1 ASCII 4-3
4.2.7.2 MICRO-DCI Binary 4-3
4.2.8 HART Interface 4-3
4.2.9 Power 4-4

5.0 CALIBRATION 5-1

5.1 General Discussion 5-1
5.2 Test Equipment Requirements 5-2
5.2.1 Equipment 5-2
5.2.2 D55XC2000 Signal Simulator 5-2
5.3 Performance Verification 5-4
5.4 Menu Sequence 5-6
5.5 Engineering Units 5-11
5.6 Calibration Procedure 5-13
5.6.1 Code Number 5-14
5.6.2 Operating Mode 5-14
5.6.3 Option 5-14
5.6.4 Maximum Velocity 5-14
5.6.4.1 Span Adjust-Forward Flow 5-14
5.6.4.2 Span Adjust - Reverse Flow 5-15
5.6.5 Zero Adjust 5-15
5.6.6 Adjust I_{out} 5-16
5.6.6.1 Adjust I_{out} at 100 % 5-16
5.6.6.2 Adjust I_{out} at 20 % 5-16
5.6.6.3 Adjust I_{out} at 20 % with HART PROTOCOL 5-16
5.6.7 Qmax > = .02 Qmax DN 5-17
5.6.8 Range DN 5-17
5.6.9 Calibration 5-17
5.6.10 Flow Direction 5-17
5.6.11 Excitation 5-17
5.6.12 Instrument Number 5-18
5.6.13 Reset 5-18
5.6.14 Output Data 5-18
5.6.15 Initialization 5-18

000230

6.0 Data Link Communications 6-1

6.1 General Discussion 6-1
6.1.1 Hardware Implementation 6-3
6.1.1.1 RS232-C Interface 6-3
6.1.1.2 RS485 Interface 6-3
6.2 ASCII Communications Mode 6-5
6.2.1 ASCII Communications Protocol 6-5
6.2.2 Monitor Mode 6-6
6.2.2.1 Function Characters with Monitor Mode 6-7
6.2.2.2 AN: Display 6-8
6.2.2.3 DP: Damping 6-8
6.2.2.4 DI: Density 6-8
6.2.2.5 DF: Flow Rate in Engineering Units 6-9
6.2.2.6 DM: Multiplexed Display 6-9
6.2.2.7 DL: Empty Pipe Detector 6-9
6.2.2.8 DS: Threshold Empty Pipe Detector 6-9
6.2.2.9 ER: Error Register 0 6-10
6.2.2.10 E1: Error Register 1 6-11
6.2.2.11 EI: Engineering Units for Maximum Flow 6-11
6.2.2.12 EZ: Engineering Units for Totalizer 6-13
6.2.2.13 I> : Scaling Factors: Forward and Reverse Flow 6-13
6.2.2.14 I< : Scaling Factor Reverse Flow 6-14
6.2.2.15 IO: Current Signal Output 6-14
6.2.2.16 IA: Alarm Current Signal Output 6-14
6.2.2.17 M: Percentage Flow Rate 6-14
6.2.2.18 NG: System Zero Reference 6-15
6.2.2.19 NW: Meter Size 6-16
6.2.2.20 PR: Software Version 6-17
6.2.2.21 Q>: Maximum Flow Rate (Range) 6-17
6.2.2.22 Q<: Maximum Reverse Flow Rate 6-17
6.2.2.23 QN: Maximum Flow Rate of Meter Size 6-17
6.2.2.24 ST: Status Register 6-18
6.2.2.25 SU: Noise Suppression 6-18
6.2.2.26 SM: Low Flow Cut-Off 6-19
6.2.2.27 SP: Language 6-19
6.2.2.28 Z>: Totalizer Forward Flow 6-19
6.2.2.29 Z<: Totalizer Reverse Flow 6-20
6.2.3 Configuration Mode 6-20
6.2.3.1 Configuration Mode Functions 6-21
6.2.3.2 AD: Address 6-21
6.2.3.3 AN: Display 6-21
6.2.3.4 BA: Baud Rate 6-22
6.2.3.5 DP: Damping 6-23
6.2.3.6 DI: Density 6-23
6.2.3.7 DM: Multiplexed Display 6-24
6.2.3.8 DR: Empty Pipe Detector 6-24
6.2.3.9 DS: Empty Pipe Detector Threshold 6-24
6.2.3.10 EI: Engineering Units for Maximum Flow 6-24
6.2.3.11 EZ: Engineering Units for Totalizer 6-25
6.2.3.12 I> : Pulse Scaling Factor 6-25
6.2.3.13 IO: Current Signal Output 6-26
6.2.3.14 IA: Alarm Current Signal Output 6-26
6.2.3.15 LZ: Totalizer Reset 6-26

6.2.3.16 LV: Forward Flow Totalizer Reset 6-26
6.2.3.17 LR: Reverse Flow Totalizer Reset 6-27
6.2.3.18 NW: Meter Size 6-27
6.2.3.19 NG: System Zero Reference 6-27
6.2.3.20 Q>: Maximum Flow Rate (Range) 6-27
6.2.3.21 QN: Maximum Flow Rate of Meter Size 6-28
6.2.3.22 SM: Low Flow Cut-Off 6-28
6.2.3.23 SP: Language 6-29
6.2.3.24 SU: Noise Suppression 6-29
6.3 Error Messages 6-28
6.3.1 Protocol and Communications Errors 6-28
6.3.2 Configuration Error Messages 6-29
6.4 Remote Display 6-30
6.4.1 ANSI Terminal 6-30
6.4.2 Data Terminal 6-32
6.5 Binary Communications Mode 6-33
6.5.1 Application 6-33
6.5.2 Software Characteristics 6-33
6.5.3 Hardware Characteristics 6-34
6.5.4 Protocol Description 6-34
6.5.4.1 Definition of Message Fields 6-34
6.5.5 Message Types 6-35
6.5.5.1 Host to Instrument 6-35
6.5.5.2 Instrument to Host (Response) 6-36
6.5.5.3 Communication Transaction Examples 6-36
6.5.6 Finding Data Addresses 6-37
6.6 DATA BASE 6-39
6.6.1 50XM Converter Data Base 6-39
6.6.1.1 B-Type Data Points 6-39
6.6.1.2 L-Type Data Points 6-43
6.6.1.3 C-Type Data Points 6-44
6.6.1.4 H-Type Data Points 6-45
6.6.1.5 Auxiliary Devices 6-46
6.6.1.6 HART Interface 6-46

7.0 MAINTENANCE 7-1

7.1 General Discussion 7-1
7.2 Signal Converter Disassembly 7-2
7.2.1 Removing Converter Module from Housing 7-2
7.2.2 Disassembly of Signal Converter Module 7-3
7.3 Troubleshooting 7-3
7.3.1 Procedure 7-4
7.3.2 Test Point Information 7-6
7.3.2.1 Analog Board 7-6
7.3.2.2 Digital Board 7-6
7.4 Parts List 7-8
7.4.1 Function Modules 7-8
7.4.2 Signal Converter Assembly (120V ac/24 V dc) 7-9
7.4.3 Signal Converter Assembly Fuse Replacement 7-10
7.4.4 Signal Converter Assembly (100/110 V ac, 220 V ac, 240 V ac) 7-10
7.4.5 Compatibility Guide 7-11

000232

Figure List

FIGURE 1-1. 50XM1000B SIGNAL CONVERTER 1-2
FIGURE 2-1. OUTLINE DIMENSIONS, REMOTELY MOUNTED SIGNAL CONVERTER 2-3
FIGURE 2-2. INTERCONNECTION WIRING FOR INTEGRALLY MOUNTED SIGNAL CONVERTER FOR MODELS 10D1465, 10D1475 AND 10D1476 2-5
FIGURE 2-3. INTERCONNECTION WIRING FOR INTEGRALLY MOUNTED SIGNAL CONVERTER FOR MODEL 10DX3311 2-6
FIGURE 2-4. INTERCONNECTION WIRING FOR INTEGRALLY MOUNTED SIGNAL CONVERTER FOR MODEL 10D1477 2-7
FIGURE 2-5. INTERCONNECTION WIRING FOR REMOTELY MOUNTED SIGNAL CONVERTER MODEL 10DX3111 2-8
FIGURE 2-6. INTERCONNECTION WIRING FOR REMOTELY MOUNTED SIGNAL CONVERTER MODELS 10D1465, 10D1475, 10D1476 AND 10D1477 2-10
FIGURE 3-1. TYPICAL DATA TAG, REMOTELY MOUNTED CONVERTER 3-1
FIGURE 3-2. TYPICAL 50XM CALIBRATION TAG 3-1
FIGURE 3-3. 50XM DISPLAY AND PUSHBUTTONS 3-3
FIGURE 5-1. TEST WIRING FOR 50XM1000 5-3
FIGURE 5-2. CONFIGURATION AND CALIBRATION FLOWCHART 5-12
FIGURE 6-1. MICRO-DCI WIDE AREA NETWORK 6-2
FIGURE 6-2. BAUD RATE VS CABLE LENGTH FOR RS 232 6-4
FIGURE 7-1. LAYOUT, ANALOG AND DIGITAL PC ASSEMBLIES 7-12
FIGURE 7-2. LAYOUT, PULSE OUTPUT MODULE (A105) 7-13
FIGURE 7-3. LAYOUT, RS485 DATA LINK MODULE (A105) 7-13
FIGURE 7-4. LAYOUT, RS232-C DATA LINK MODULE (A105) 7-14
FIGURE 7-5. LAYOUT, DRIVER MODULE (A104) 7-14
FIGURE 7-6. LAYOUT, SIGNAL AND REFERENCE MODULE (A103) 7-15
FIGURE 7-7. LAYOUT, EMPTY PIPE DETECTOR MODULE (A102) 7-15
FIGURE 7-8. LAYOUT, DIGITAL BOARD WITH HART INTERFACE MODULE 7-16
FIGURE 7-9. LAYOUT, DC/DC CONVERTER ASSEMBLY 7-17

Table List

TABLE 3-1. RANGE UNITS 3-8
TABLE 3-2. TOTALIZER UNITS 3-8
TABLE 3-3. METER SIZES 3-8
TABLE 6-1. FUNCTION CODES 6-7
TABLE 6-2. ENGINEERING FLOW UNIT INDEX 6-12
TABLE 6-3. TOTALIZATION UNIT INDEX 6-13
TABLE 6-4. INDEX OF METER SIZES 6-16
TABLE 6-5. LANGUAGE INDEX 6-19
TABLE 6-6. BAUD RATE INDEX 6-22
TABLE 6-7. ANSI TERMINAL KEYS 6-31

READ FIRST

WARNING

All Flowmeters and/or Signal Converters being returned to Fischer & Porter for repair must be free of any hazardous materials (acids, alkalis, solvents, etc.). A Material Safety Data Sheet (MSDS) for all process liquids must accompany returned equipment. Contact F&P for authorization prior to returning equipment.

NEMA 4X, Corrosion Resistant Finish

This product is painted with a high performance epoxy paint. The corrosion protection provided by this finish is only effective if the finish is unbroken. It is the users' responsibility to "touch-up" any damage that has occurred to the finish during shipping or installation of the product. Special attention must be given to: meter flange bolting, pipe mounting of electronics, conduit entries and covers that are removed to facilitate installation or repair. For continued corrosion protection throughout the product life, it is the users' responsibility to maintain the product finish. Incidental scratches and other finish damage must be repaired and promptly re-painted with approved touch-up paint. Provide the model number and size of your product to the nearest Fischer & Porter representative to obtain the correct touch-up paint.

This revision fo Instruction Bulletin 50XM1000B replaces PN 24273B.

The Sections listed below have been added or revised in this manual.

Section 1.0 Introduction:

1.2 Model Number Breakdown was revised.

Section 2.0 Installation:

Figures 2-1 through 2-3 were revised.

Figures 2-4 through 2-6 were added.

Section 3.0 Operation:

Sub-Section 3.3 was revised to agree with Firmware version D699B103U01 D.10.

Section 4.0 Functional Description:

Sub-Section 4.2.7.2, added Item 4.

Section 5.0 Calibration was added.

Section 6.0 Data Link Communications was added.

Section 7.0 Maintenance:

Selected part numbers were revised in Sections 7.4.1 and 7.4.2

Additional fuses were added to Sub-Section 7.4.3.

Sub-Section 7.4.4 was added

Figures 7-2 through 7-9 were added.

000235

1.0 INTRODUCTION

1.1 General Description

The F&P 50XM1000B Microprocessor-based Signal Converter is of modular construction and uses the latest state-of-the-art electronic design (a mix of standard IC and surface mount technology). This design concept provides a compact, reliable, instrument intended for use with MAG-X® type flowmeters. The 50XM1000B features firmware which has been developed especially for flow metering applications. This permits the respective flowmeter/signal converter combination to be easily customized for the particular process operating parameters.

The signal converter can be mounted as an integral part of the flowmeter or in a remote NEMA 4X rated enclosure. A remotely mounted signal converter (with the housing cover removed) is shown in Figure 1-1.

NOTE
Flowmeters manufactured to earlier design levels require an internal circuit board change to make them compatible with the integrally mounted 50XM Converter. Consult F&P for details.

As signal converter operations are microprocessor-based, the converter has the capability to communicate via data link with other intelligent instruments such as F&P Series 53SU1000 SUPERVISOR, 53SU5000 SUPERVISOR-PC, or host computer. The signal converter will support either MICRO-DCI™ Binary or ASCII protocol, permitting up to 32 instruments to be addressed via the data link. In addition, when specified at time-of-purchase, communications can be provided over the 4-20 mA current output using HART™ protocol.

The signal converter can be configured manually by use of the three pushbutton switches adjacent to the LCD readout (See Figure 1-1) or remotely by means of the data link. During configuration, the converter remains on-line and data is updated continually. Zero is F&P set and no field zero adjustments are required.

Major features of the signal converter include:

1) All operating parameters are configurable, e.g., totalization units, flow rate range, calibration factor, etc. Parameter values can be changed via pushbuttons on the converter or via serial interface.
2) Microprocessor-based with digital signal processing.
3) Communication via terminal, computer or similar smart instrument using RS 485, RS 232-C or current loop. Compatible with F&P MICRO-DCI instruments, permitting integration into process control or monitoring systems.
4) Direct reading data display without operator calculations. Displays forward and/or reverse flow.
5) Automatic self-monitoring with error diagnostics.

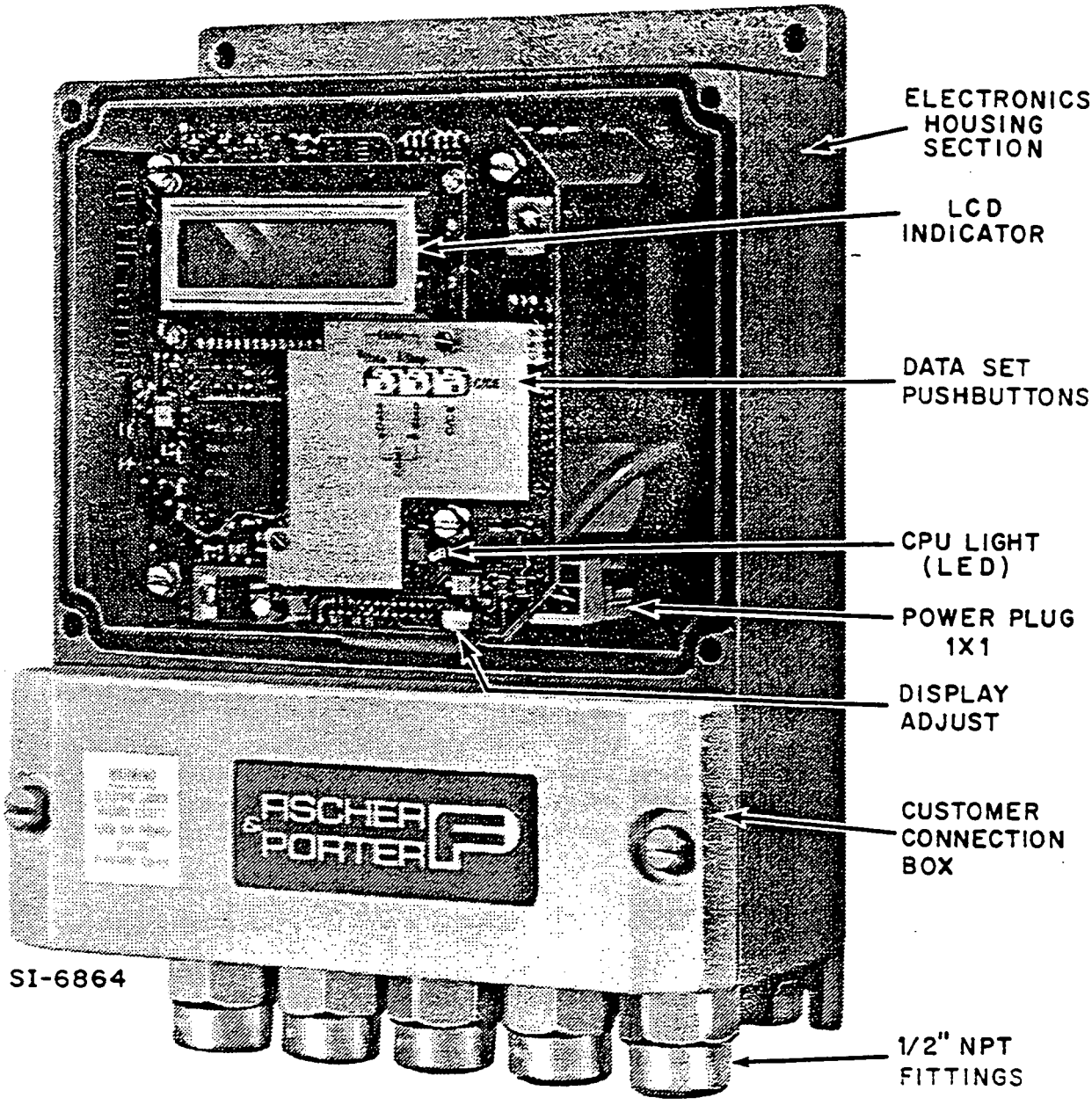

FIGURE 1-1. 50XM1000B SIGNAL CONVERTER (HOUSING COVER REMOVED)

000237

1.2. Model Number Breakdown

Refer to the data sheet or instrument tag on the signal converter for the model number of the signal converter. The details of a model number are defined as follows:

50 X M 1 _ B X _ _ _ _ AA _ _ 2 _

Engineering File Reference
Transmitter, Converters — 50

Type of Excitation
Pulsed dc — X

Design Type
Microprocessor — M

Design Designation
Fixed Data — 1

Excitation Frequency
6.25 Hz (50 Hz) — 1
12.5 Hz (50 Hz) — 2
7.5 Hz (60 Hz) — 3
15 Hz (60 Hz) — 4
DC 12.5 Hz (50 Hz power in vicinity) — 6
DC 15 Hz (60 Hz power in vicinity) — 8

Design Level — B

Software Level — X

Certification
None — A
FM Approved - Primary Flowmeter and remote Signal Converter: Nonincendive for Cl I, Div.2, Gp A, B, C and D; Electrodes Intrinsically Safe for Cl I, Div 1, Gp A, B, C and D; Outdoor Hazardous Locations, NEMA 4X. Integral Signal Converter enclosure additionally approved: Dust-Ignition proof Cl II, Div 1, Gp E,F and G; Suitable for Cl III, Div; Accidental Submergence, 30 ft H_2O/48 h (9 m H_2O/48 h). — K

Enclosure
Field Mount with Window, NEMA 4X, PG13.5 Fittings — B
Field Mount with Window, NEMA 4X, 1/2 inch NPT Fittings — D

Contact Outputs
Optocoupler — 1
Relay Contact — 2

Output Options
Without — 0
Active Scaled Pulse Forward and Reverse* — 1
Relay Contact Scaled Forward and Reverse — 2
Opto Coupler Scaled Pulse Forward and Reverse* — 3
Serial Interface RS485 — 4
Serial Interface RS232C — 5
RS485 + pulse output opto forward** — 6
RS232 + pulse output opto forward** — 7
RS485 Port with Relay Pulse Output Forward** — 8

* 4 kHz max, pulse width configurable from .032 ms to 2000 ms
** Alarm output not available

Method of Operation
Continuous Measurement — AA

1.2 Model Number Breakdown (continued)

50 X M 1 _ B X A D 1 _ AA _ _ 2 _

Additional Options

Empty Pipe Detector***	A
Without Empty Pipe Detector	B
Empty Pipe Detector and External Totalizer Reset**** ***	E
External Totalizer Reset****	F
HART Protocol, Empty Pipe Detector***	G
HART Protocol	H
HART Protocol, External Totalizer Reset, Empty Pipe Detector**** ***	J
HART Protocol, External Totalizer Reset****	K

*** Not available with Flowmeter 10D1477N, Flowmeters <1/2 inch, conductivity <20µs and Ultrasonic cleaning.
**** Zero return not available; not available with Flowmeter 10D1477N

Supply Voltage

240 V ac, 50/60 Hz ++	A
200/220 V ac, 50/60 HZ ++	B
120 V ac, 50/60 Hz	C
100/110 V ac, 50/60 Hz	D
24 V dc	H

++ Certification must be "A"

Customer Language

English	2

Output Current

0-20 mA	1
4-20 mA	2

000239

1.3. Specifications

Power Requirements

Power Input (as specified)	110/120 V ac ± 10%, 50/60 Hz (standard), or 24 V dc ± 25% (110 V ac, 50/60 Hz and 220/240 V ac, 50/60 Hz available, contact F&P)
Power Consumption	< 30 VA

Performance Characteristics

Flowmeter Model Number	refer to the data sheet or instrument tag on the body of the flowmeter
Meter Size, Cal Factor and Flow Range	see the flowmeter instruction bulletin
Minimum Liquid Conductivity	5 µS/cm
Bidirectional Flow	rate indication and totalization in both forward and reverse flow direction. (Flow direction for analog output is indicated by contact closure.)
Accuracy	0.5% of rate from 2% to 100% of meter Cal Factor; 0.01% of Cal Factor from 0% to 2% of Cal Factor
Response Time	.5 second, minimum
Damping	configurable, 1 to 100 seconds
Analog Output Current	4-20 mA into 0 to 750 ohm load (configurable to 0-20, 2-10, 0-5, 0-10, 0-10-20 or 4-12-20 mA)

Pulse Outputs

Scaled Pulse*	24 V dc, 150 ohm min load, 0-4 kHz max, pulse width configurable from 0.032 ms to 2000 ms
Unscaled Pulse	5 V dc (TTL), 0-10 kHz max unscaled frequency, pulse width configurable from 0.032 ms to 2000 ms (15 feet (5 m) maximum cable length)

* Scaled pulse output is also available with optically coupled output option when data link output option specified.

Contact Outputs	
Alarm Contact	denotes failure condition, with high or low analog output. Energy through contacts must not exceed 3 VA, 28 V or 250 mA.
Flow Direction	contact transfers when flow direction changes. Energy through contacts must not exceed 3 VA, 28 V or 250 mA.
Contact Inputs (optional)	
Zero Return or Totalizer Reset	as specified by Model Number, remote contact closure needed to initiate action, as follows: Total Reset (forward and reverse), momentary closure. Zero return, maintained closure when pump or valve stops flow through meter
Communications	
Data Link I/O	binary or ASCII communications -- via RS 232-C, 110 to 9600 Baud, 50 feet (15 m) limit, 1 instrument serial communication -- via RS 485, 110 to 28.8 kBaud, 4000 feet (1200 m) limit, up to 32 instruments in parallel
HART Interface	1200 bits/s (transmitting/receiving) using frequency shift keying (FSK) as defined by Bell 202 standard, 5000 feet (1525 m) limit
Empty Pipe Detection	automatically drives the analog and digital output signals to zero when the meter electrodes become uncovered (not available with 10D1477 Flowmeters, or if < 20 µS conductivity or sizes <1/2 inch)
Physical Characteristics	
Ambient Temperature Range (converter only)	14° F to 131° F (-10° C to +55° C)
Relative Humidity	10% to 90% non-condensing
Vibration Limit	< .75 g continuous (10 to 150 Hz) < 1.5 g intermittent (10 to 150 Hz)
Enclosure Classification	NEMA 4X, IEC 529 IP65 (weather-tight and dust-tight)
Housing	3-piece aluminum housing with gasketed covers, panel or wall-mounting (refer to Figure 2-1)
Cable Entrance	five 1/2 inch NPT conduit or PG13.5 cable fittings in base

000241

2.0 INSTALLATION

2.1 Inspection

The F&P 50XM1000 Signal Converter is shipped in a heavy-duty protective container that is specially designed to provide adequate protection of the equipment during transit. The packaging is certified for air shipment by the Container Testing Laboratory. An itemized list of all items included in the shipment is attached to the shipping container.

The signal converter can be supplied as an integrally mounted assembly of the flowmeter, or in a separate wall or panel mounted enclosure. When the 50XM Converter is integrally mounted with the flowmeter, outline and mounting dimensions are provided in the instruction bulletin supplied with the flowmeter. Outline dimensions and clearance requirements for the remotely mounted signal converter are provided in Figure 2-1.

The equipment should be inspected immediately upon arrival for indications of damage that may have occurred during shipment. In most cases a careful visual inspection is all that is required to establish apparent damage.

All damage claims should be reported to the shipping agent involved before installing the equipment. In the event damage is such that faulty operation is likely to result, this damage should be brought to the attention of the F&P Service Department before installation. Always reference the complete instrument serial number and model number in all correspondence concerning the equipment supplied.

Following inspection of the shipment contents, it is suggested that all items be carefully replaced in the shipping container for storage and/or transit to the installation site. The use of normal care in the handling and installation of this equipment will contribute substantially toward satisfactory performance.

2.2 Location and Mounting

When the signal converter is integrally mounted, refer to the installation section of the instruction bulletin supplied with the flowmeter for location and mounting requirements.

The installation site for the remotely mounted signal converter should be clean, well lighted and adequately ventilated. The remote mounted enclosure is designed to meet NEMA 4X standards and is suitable for indoor or outdoor installation in an environment that is within the temperature, humidity and vibration limits as given in Sub-Section 1.3. Mounting dimensions for the wall or panel mounted enclosure are provided in Figure 2-1. Mounting hardware is to be supplied by the user.

Also, consideration should be given to access requirements for repair and maintenance of the equipment.

The installation site must be provided with a power source that is compatible with the signal converter power requirements. Refer to the converter data tag for power requirements.

000243

7412

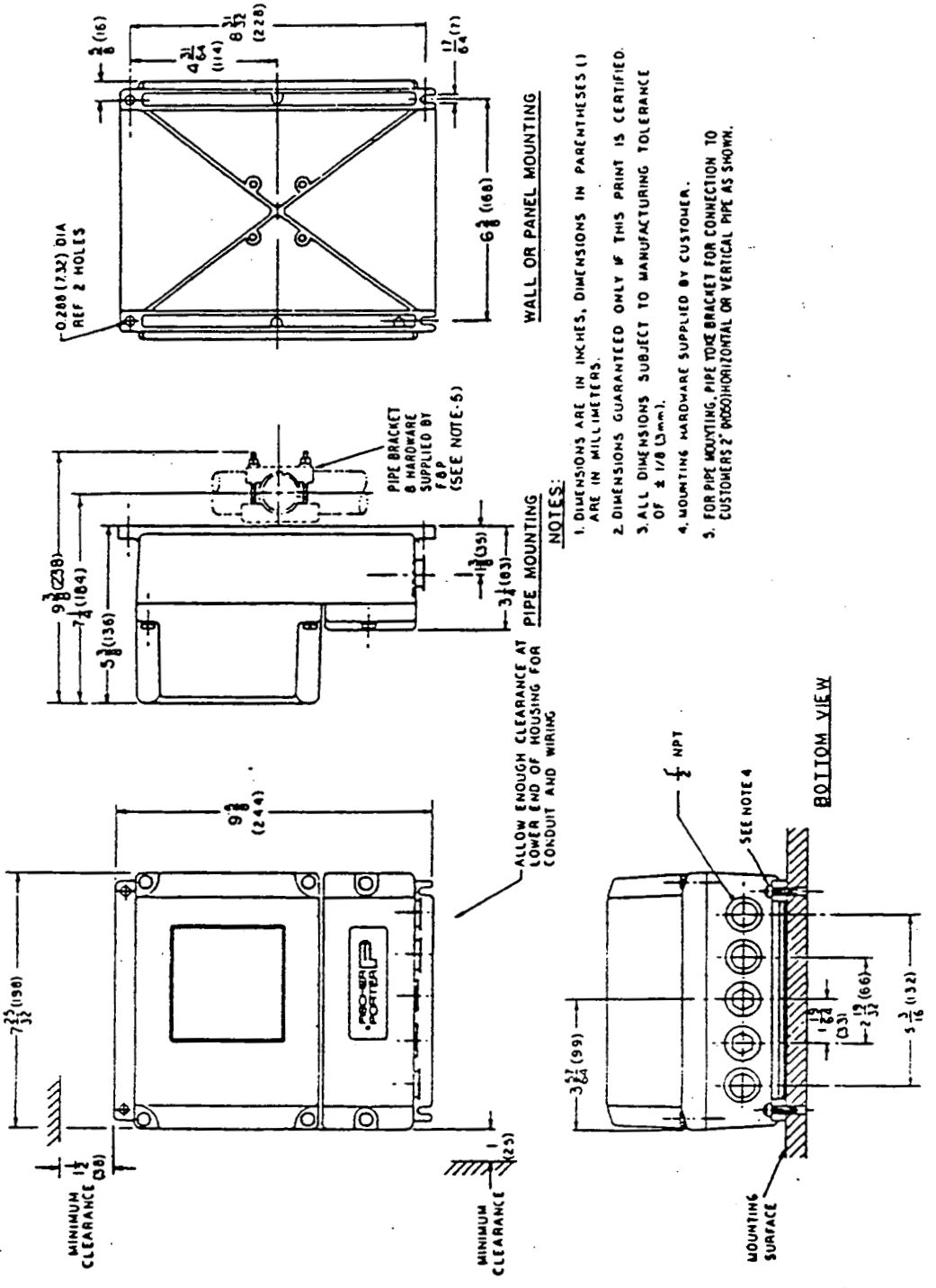

OD-50-1279 R0

FIGURE 2-1. OUTLINE DIMENSIONS, REMOTELY MOUNTED SIGNAL CONVERTER

000244

2.3 Electrical Interconnections

2.3.1 Integrally Mounted Signal Converter

Signal and power interconnection wiring enters the customer connection box on the flowmeter housing via two 1/2 inch NPT conduit fittings. Any unused opening(s) must be sealed by installing a 1/2 inch pipe plug(s) in the unused opening(s). All wiring is to be enclosed within metal conduit, supplied by the user. Interconnection wiring is terminated to an 8 point terminal block located within the customer connection box. Terminal assignment will vary according to the options specified, as defined by the instrument model number. Interconnections for the integrally mounted 50XM Converter are identified in Figures 2-2 through 2-4. If the integrally mounted converter is used for bidirectional flow, flow direction will not be indicated for the analog output. The display will show flow direction for both totalization and flowrate. Additional options are available with the remote version.

2.3.2 Remotely Mounted Signal Converter

The signal converter customer connection box is supplied with five openings for 1/2 inch NPT conduit fittings or PG13.5 cable fittings as specified at time of purchase. Any unused opening(s) must be sealed by installing an applicable plug(s) in the unused opening(s). This is required to maintain the NEMA 4X rating of the enclosure. All interconnection wiring in North America is to be enclosed within metal conduit supplied by user.

The signal converter signal and power interconnection cables are to be terminated to the 25 point terminal block located in the remote customer connection box. Certain terminal assignments vary in accordance with the model number as defined in the terminal assignment table in Figures 2-5 and 2-6. Note that the terminals labeled V1 through V4 are used for the active pulse output as well as the data link. Consequently, only one of these can be selected as an option. If a pulse output is required as well as the data link, the output pulse must be optocoupled, and is available on terminals 55 and 56 (V5 and V6). When this combination is selected, the alarm contact on terminals V5 and V6 (39 and 40) is not available.

Unless otherwise specified, thirty feet of signal and ground cable is supplied by F&P for connecting the flowmeter process signal (1 and 2), reference signal (16 and 3-shield) and magnet coil drive (M1 and M3-shield) to the remotely mounted signal converter. The flowmeter housing ground terminal is connected to the signal converter housing ground terminal, which is connected to an external earth ground. (Refer to the flowmeter grounding procedure given in the instruction bulletin provided for the flowmeter.)

CAUTION
For Model 10D1477 Flowmeters, the signal cable leads 1 and 2 have driven shields which must be connected as follows:
line 1 shield to V+,
line 2 shield to V-

000245

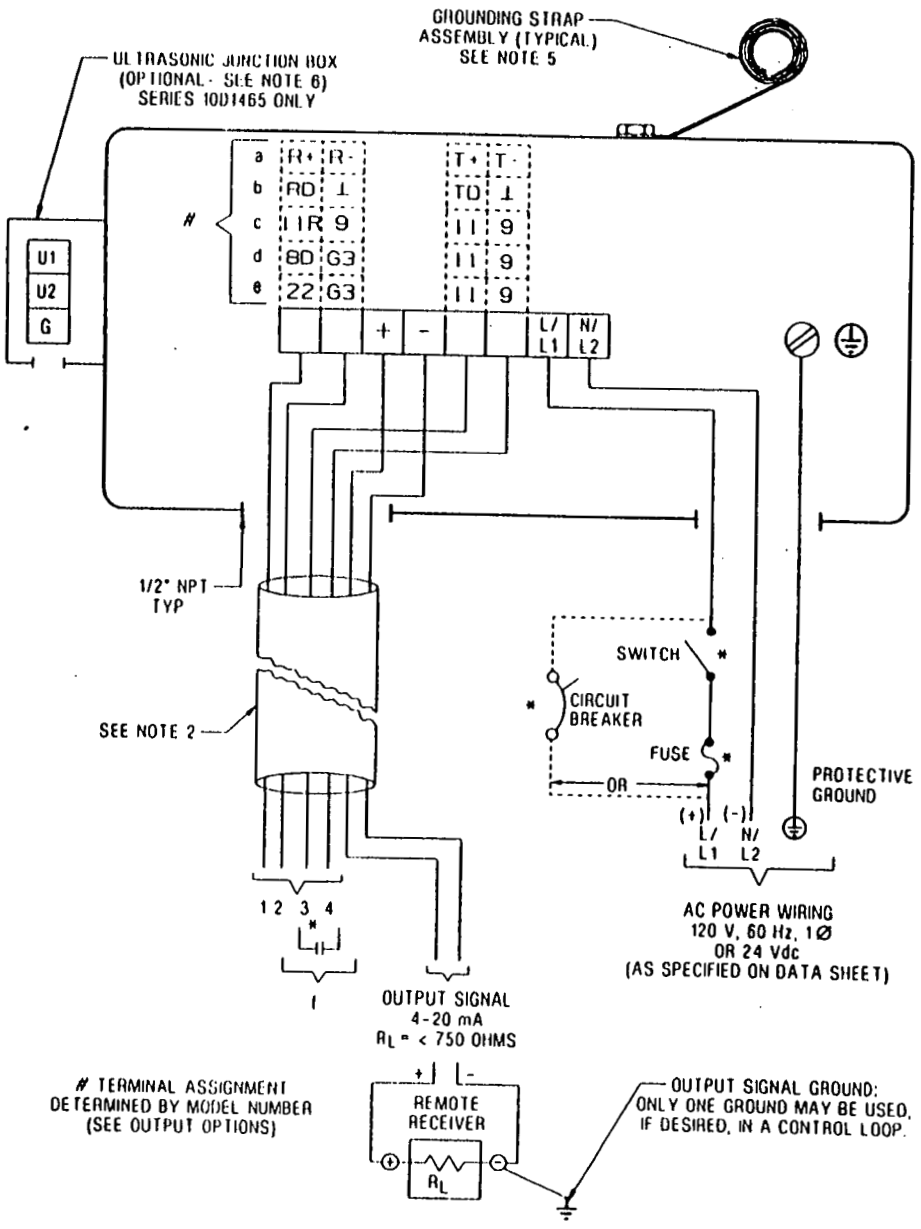

TERMINAL ASSIGNMENT TABLE

a) DATA LINK RS 485 1/2/3/4

b) DATA LINK RS 232C 1/2/3/4

c) SCALED PULSE OUTPUT, ACTIVE, 24 Vdc, LOAD > 150 OHMS
1/2 - REVERSE FLOW
3/4 - FOWARD FLOW

d) SCALED PULSE OUTPUT, ACTIVE, 24 Vdc LOAD > 150 OHMS & 10 KHz UNSCALED PULSE
1/2 - 10 KHz UNSCALED PULSE
3/4 - FOWARD FLOW

e) SCALED PULSE OUTPUT, ACTIVE, 24 Vdc, LOAD > 150 OHMS & ZERO RETURN
1/2 - ZERO RETURN FEATURE
3/4 - FORWARD FLOW

f) FIELD CONTACTS: ZERO RETURN FIELD CONTACTS TO CLOSE WHEN METER SUPPLY PUMP OR VALVE STOPS FLOW THRU METER TERMINALS 22 & G3 REMAIN OPEN IF THIS FEATURE IS NOT USED.

NOTES:

1. * INDICATES SUPPLIED BY CUSTOMER.
2. ALL WIRING TO BE ENCLOSED IN METAL CONDUIT SUPPLIED BY CUSTOMER.
3. UNUSED CONNECTIONS MUST BE PLUGGED.
4. ALL CONDUIT CONNECTIONS ARE 1/2" NPT.
5. METER GROUNDING STRAPS ARE USED TO PREVENT STRAY ELECTRICAL CURRENTS FROM PASSING THROUGH THE METERED LIQUID. SEE INSTRUCTION BULLETIN FOR DETAILS.
6. WHEN ULTRASONIC CLEANING IS SPECIFIED, REFER TO INSTRUCTION BULLETIN 55UC2000.

REF: 10-50-1784 REV 2

FIGURE 2-2. INTERCONNECTION WIRING FOR INTEGRALLY MOUNTED SIGNAL CONVERTER FOR MODELS 10D1465, 10D1475 AND 10D1476

7412

000246

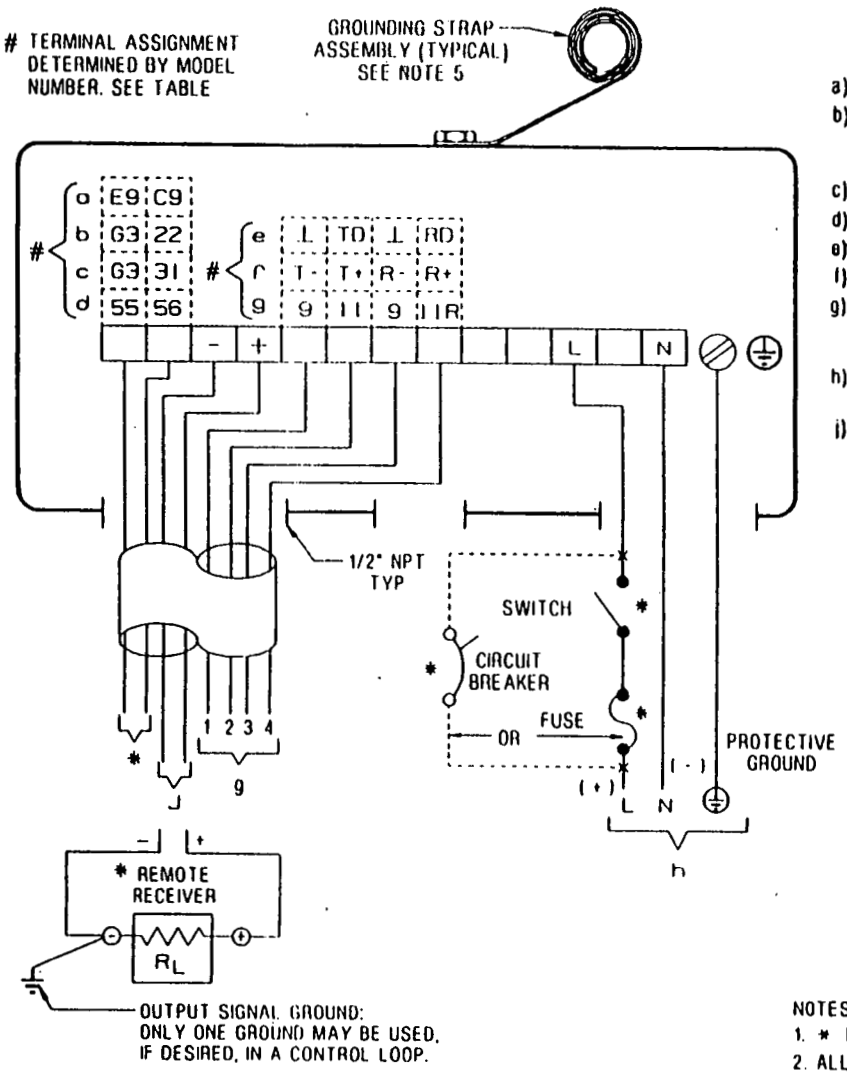

REF: ID-50-1801 REV 2

TERMINAL ASSIGNMENT TABLE

a) SOLID STATE STATUS ALARM OUTPUT; COLLECTOR (C9) AND EMITTER (E9)

b) FIELD CONTACTS, ZERO RETURN FIELD CONTACTS TO CLOSE WHEN METER SUPPLY PUMP OR VALVE STOPS FLOW THROUGH METER. TERMINALS 22 & G3 REMAIN OPEN IF THIS FEATURE IS NOT USED.

c) TOTALIZER RESET INPUT VIA ISOLATED CUSTOMER CONTACT

d) SOLID STATE SCALED PULSE OUTPUT FORWARD; COLLECTOR (55) AND EMITTER (56)

e) DATA LINK RS 232C

f) DATA LINK RS 485

g) SCALED PULSE OUTPUT, ACTIVE, 24 Vdc, LOAD >150 OHMS
TERMINALS 9 & 11, FORWARD FLOW (1 & 2)
TERMINALS 9 & 11R, REVERSE FLOW (3 & 4)

h) POWER SUPPLY: 120 Vac, 60 Hz, 1Ø; OR 24 Vdc (AS SPECIFIED ON DATA TAG).

i) OUTPUT SIGNAL = 4-20 mA
CURRENT OUTPUT R_L = <750 OHMS

FM APPROVED

220/240 V INSTRUMENTS NOT INCLUDED

NONINCENDIVE FOR CL I,DIV 2,GP A,B,C & D

DUST-IGNITIONPROOF FOR CL II,DIV 1,GP E,F & G

SUITABLE FOR CL III,DIV 1, OUTDOOR HAZARDOUS LOCATIONS, NEMA 4X

INSTALLATION REQUIREMENTS

NON-HAZARDOUS LOCATIONS: WIRING SHALL COMPLY WITH NATIONAL ELECTRICAL CODE AND LOCAL ELECTRICAL CODE REQUIREMENTS.

HAZARDOUS LOCATIONS: WIRING TO BE IN CONDUIT, BOXES, FITTINGS AND SEALS TO COMPLY WITH ARTICLES 501, 502 OR 503 AS APPLICABLE, OF ANSI/NFPA 70 AND LOCAL ELECTRICAL CODE REQUIREMENTS

EQUIPMENT NOT BY F&P (*) TO BE IN NON-HAZARDOUS AREA UNLESS APPROVED FOR DIV 1 OR 2.

NOTES:

1. * INDICATES INTERFACE SUPPLIED BY CUSTOMER.
2. ALL WIRING TO BE ENCLOSED IN METAL CONDUIT SUPPLIED BY CUSTOMER.
3. UNUSED CONNECTIONS MUST BE PLUGGED.
4. ALL CONDUIT CONNECTIONS ARE 1/2" NPT.
5. METER GROUNDING STRAPS ARE USED TO PREVENT STRAY ELECTRICAL CURRENTS FROM PASSING THROUGH THE METERED LIQUID. SEE INSTRUCTION BULLETIN FOR DETAILS.

FIGURE 2-3. INTERCONNECTION WIRING FOR INTEGRALLY MOUNTED SIGNAL CONVERTER FOR MODEL 10DX3311

000247

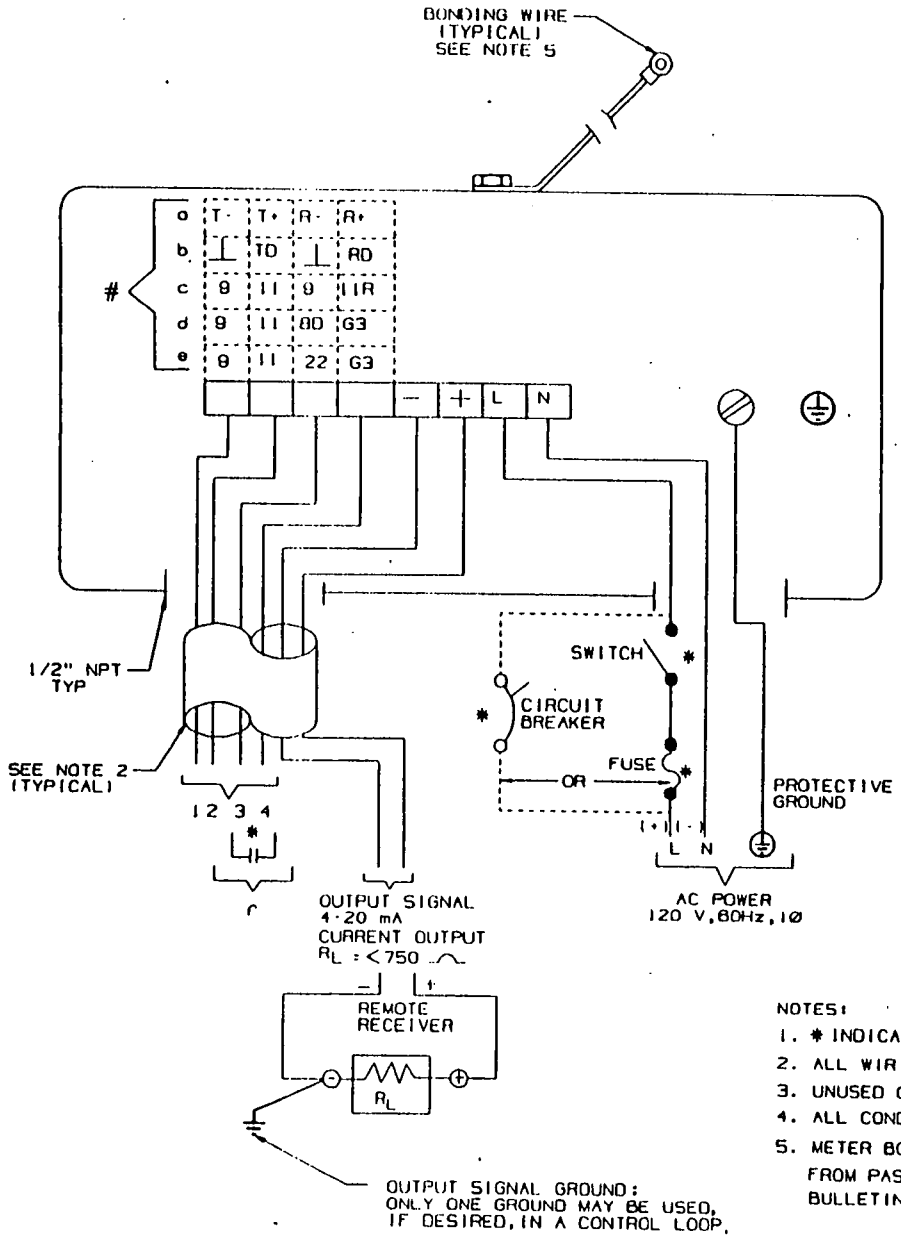

TERMINAL ASSIGNMENT DETERMINED BY MODEL NUMBER (SEE OUTPUT OPTIONS)

a) DATA LINK RS 485 1/2/3/4
b) DATA LINK RS 232C 1/2/3/4
c) SCALED PULSE OUTPUT, ACTIVE, 24 Vdc, LOAD > 150 OHMS
   1/2 - FORWARD FLOW
   3/4 - REVERSE FLOW
d) SCALED PULSE OUTPUT, ACTIVE, 24Vdc, LOAD > 150 OHMS & 10 KHz UNSCALED PULSE
   1/2 - FORWARD FLOW
   3/4 - 10 K Hz UNSCALED PULSE
e) SCALED PULSE OUTPUT, ACTIVE, 24 Vdc, LOAD > 150 OHMS & ZERO RETURN
   1/2 - FORWARD FLOW
   3/4 - ZERO RETURN FEATURE
f) FIELD CONTACTS. ZERO RETURN FIELD CONTACTS TO CLOSE WHEN METER SUPPLY PUMP OR VALVE STOPS FLOW THRU METER. TERMINALS 22 & G3 REMAIN OPEN IF THIS FEATURE IS NOT USED.

FM APPROVED

220/240 V INSTRUMENTS NOT INCLUDED

NONINCENDIVE FOR CL I, DIV 2, GP A, B, C & D

DUST-IGNITIONPROOF FOR CL II, DIV 1, GP E, F & G

SUITABLE FOR CL III, DIV 1, OUTDOOR HAZARDOUS LOCATIONS, NEMA 4

INSTALLATION REQUIREMENTS

NON-HAZARDOUS LOCATIONS: WIRING SHALL COMPLY WITH NATIONAL ELECTRICAL CODE AND LOCAL ELECTRICAL CODE REQUIREMENTS.

HAZARDOUS LOCATIONS: WIRING TO BE IN CONDUIT, BOXES, FITTINGS AND SEALS TO COMPLY WITH ARTICLES 501, 502 OR 503 AS APPLICABLE, OF ANSI/NFPA 70 AND LOCAL ELECTRICAL CODE REQUIREMENTS

EQUIPMENT NOT BY F&P (*) TO BE IN NON-HAZARDOUS AREA UNLESS APPROVED FOR DIV 1 OR 2.

NOTES:
1. * INDICATES SUPPLIED BY CUSTOMER.
2. ALL WIRING TO BE ENCLOSED IN METAL CONDUIT SUPPLIED BY CUSTOMER.
3. UNUSED CONNECTIONS MUST BE PLUGGED.
4. ALL CONDUIT CONNECTIONS ARE 1/2" NPT.
5. METER BONDING WIRES ARE USED TO PREVENT STRAY ELECTRICAL CURRENTS FROM PASSING THROUGH THE METERED LIQUID. SEE INSTRUCTION BULLETIN FOR DETAILS.

REF: ID-50-1809 REV 1

FIGURE 2-4. INTERCONNECTION WIRING FOR INTEGRALLY MOUNTED SIGNAL CONVERTER FOR MODEL 10D1477

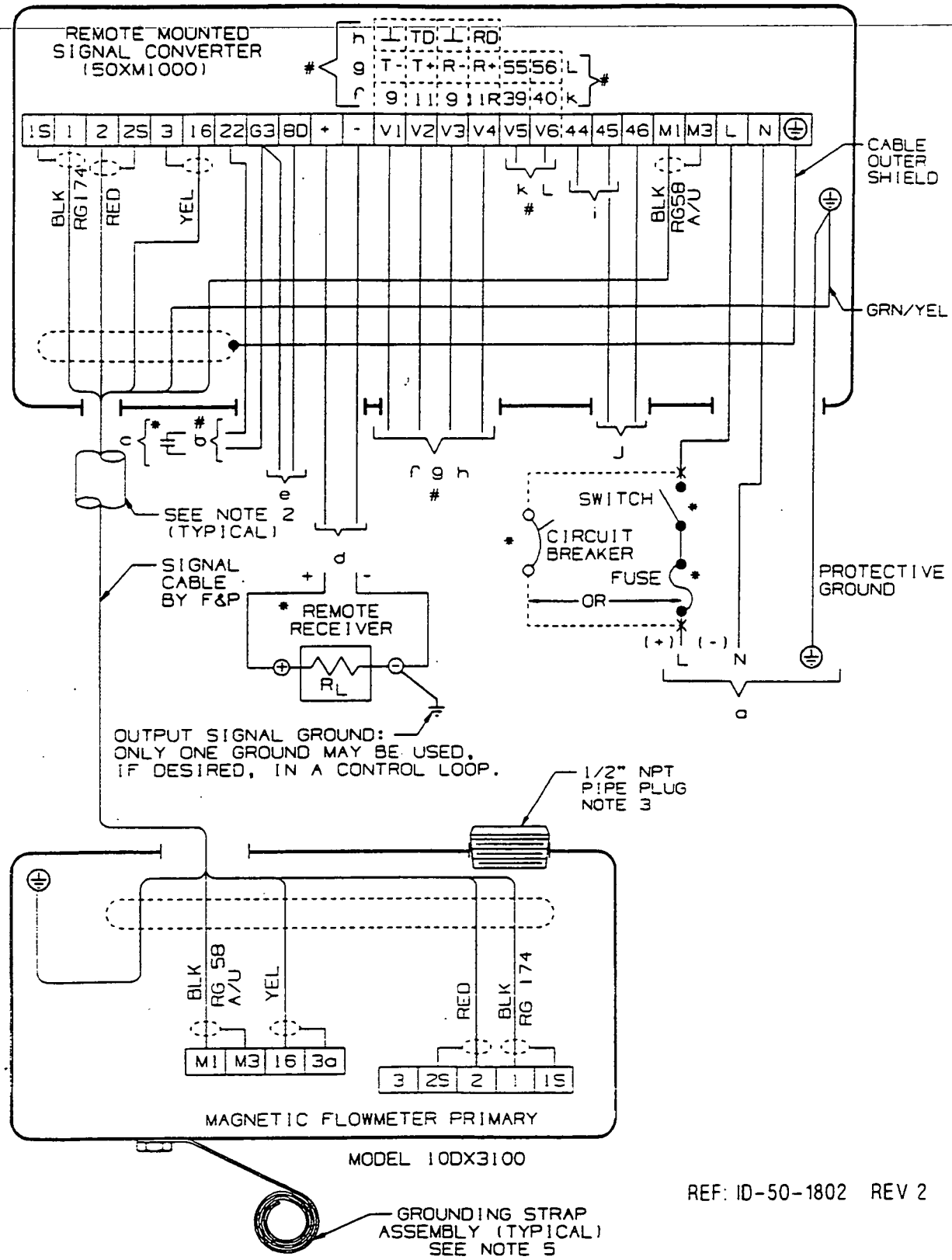

FIGURE 2-5. INTERCONNECTION WIRING FOR REMOTELY MOUNTED SIGNAL CONVERTER MODEL 10DX3111

(Refer to the following page for applicable text.)

TERMINAL ASSIGNMENT TABLE

a) POWER SUPPLY - 120/240 V, 50/60 HZ, SINGLE PHASE OR 24 V dc, (AS SPECIFIED ON NAME PLATE)
NOTE: 240 V SUPPLY NOT FM APPROVED.

b) MAY FUNCTION AS EITHER ZERO RETURN OR TOTALIZER RESET, AS SPECIFIED BY MODEL NUMBER.

c) FIELD CONTACTS-IF USED AS ZERO RETURN FIELD CONTACTS TO CLOSE WHEN METER SUPPLY PUMP OR VALVE STOPS FLOW THRU METER. WHEN USED FOR TOTALIZER RESET, CONTACTS TO MOMENTARILY CLOSE TO INITIATE. TERMINALS 22 & G3 REMAIN OPEN IF NOT USED.

d) OUTPUT SIGNAL = 4-20 mA
CURRENT OUTPUT R_L = <750 OHMS

e) 0 TO 10 K Hz, ACTIVE TTL, 5m (15 FT) MAX CABLE LENGTH

f) SCALED PULSE OUTPUT, ACTIVE, 24Vdc LOAD >150 OHMS
TERMINAL 9 & 11, FORWARD FLOW
TERMINAL 9 & 11R, REVERSE FLOW

g) DATA LINK RS 485

h) DATA LINK RS 232C

i) REVERSE FLOW INDICATION - VIA RELAY CONTACT ● ●

j) FORWARD FLOW INDICATION ----SAME AS ABOVE

k) ALARM CONTACT ● ●

L) OPTO COUPLED SCALED PULSE FORWARD - <10mA, <28Vdc.

NOTES:

1. ✳ INDICATES SUPPLIED BY CUSTOMER.
2. ALL WIRING TO BE ENCLOSED IN METAL CONDUIT SUPPLIED BY CUSTOMER
3. UNUSED CONNECTIONS MUST BE PLUGGED TO MAINTAIN NEMA 4 RATING
4. ALL CONDUIT CONNECTIONS ARE 1/2" NPT.
5. METER GROUND BONDING STRAPS ARE USED TO PREVENT STRAY ELECTRICAL CURRENTS FROM PASSING THROUGH THE METERED LIQUID. SEE INSTRUCTION BULLETIN FOR DETAILS.
6. FOR HIGH TEMPERATURE APPLICATIONS (ABOVE 250°F) ENTIRE EXTERIOR OF METER BODY MUST BE INSULATED (EXCLUDING ELECTRONICS BOX MOUNTED ON EXTENSION NECK).

REF: ID-50-1802 REV2

INSTALLATION REQUIREMENTS

FM APPROVED

THIS IS NONINCENDIVE EQUIPMENT WHICH IS SUITABLE FOR INSTALLATION IN CLASS I, DIVISION 2, GROUP A, B, C & D, HAZARDOUS (CLASSIFIED) LOCATIONS.

⚠ WARNING

DO NOT DISCONNECT WIRING, REMOVE OR REPLACE COMPONENTS OR ASSEMBLIES WHILE CIRCUITS ARE ALIVE, UNLESS AREA IS KNOWN TO BE NONHAZARDOUS.

NON-HAZARDOUS LOCATION WIRING SHALL COMPLY WITH ANSI/NFPA 70, NATIONAL ELECTRICAL CODE, AND LOCAL CODE REQUIREMENTS.

CLASS I, DIVISION 2 EQUIPMENT AND WIRING SHALL BE INSTALLED IN ACCORDANCE WITH ANSI/NFPA 70, ARTICLE 501.

THIS EQUIPMENT HAS "NONINCENDIVE CIRCUIT FIELD WIRING" CONNECTIONS IN ACCORDANCE WITH ANSI/ISA S12.12, FOR USE IN CLASS I AND II, HAZARDOUS (CLASSIFIED) LOCATIONS, ALLOWING ORDINARY LOCATION WIRING PER ANSI/NFPA 70, ARTICLES 501-4(b) EXCEPTION.

DEFINITIONS:

EQUIPMENT SUPPLYING ENERGY TO NONINCENDIVE CIRCUIT(S).

Voc = MAXIMUM OUTPUT VOLTAGE
Isc = MAXIMUM OUTPUT CURRENT
Ca = MAXIMUM ALLOWABLE CAPACITANCE
La = MAXIMUM ALLOWABLE INDUCTANCE

EQUIPMENT RECEIVING ENERGY FROM NONINCENDIVE CIRCUIT(S).

Vmax = MAXIMUM INPUT VOLTAGE
Imax = MAXIMUM INTPUT CURRENT
Ci = MAXIMUM INTERNAL CAPACITANCE
Li = MAXIMUM INTERNAL INDUCTANCE

INTERCONNECTING FIELD WIRING.

Ccable = TOTAL CABLE CAPACITANCE
Lcable = TOTAL CABLE INDUCTANCE

NONINCENDIVE CIRCUIT FIELD WIRING PARAMETERS.

NOTE NONINCENDIVE CIRCUIT FIELD WIRING PARAMETERS ONLY APPLY TO CIRCUIT TERMINALS IDENTIFIED BY A DOUBLE ASTERISK (✳✳).

✳✳ CONTACT TERMINALS: Vmax = 32.0 Vdc Imax = 110 mA
Ci = 0 La = 0

EQUIPMENT SUPPLYING THESE CONTACTS SHALL BE FACTORY MUTUAL RESEARCH APPROVED, AND DESIGNATED AS "AIS" (ASSOCIATED INTRINSICALLY SAFE APPARATUS), OR "ANI" (ASSOCIATED NONINCENDIVE EQUIPMENT), AND SHALL HAVE:

Voc < Vmax, Isc < Imax, Ca > Ccable, AND La > Lcable

WHEN CABLE PARAMETERS ARE UNKNOWN, THE FOLLOWING VALUES MAY BE USED:

CAPACITANCE (Ccable): 60 pF/ft (200 pF/m)
INDUCTANCE (Lcable): 0.20 uH/ft (0.66uH/m)

IT IS THE USERS RESPONSIBILITY TO VERIFY THE SUITABILITY OF ALL EQUIPMENT AND WIRING FOR USE IN A CLASS I, DIVISION 2, HAZARDOUS (CLASSIFIED) LOCATION.

FIGURE 2-5. INTERCONNECTION WIRING FOR REMOTELY MOUNTED SIGNAL CONVERTER MODEL 10DX3111

(Refer to the previous page for applicable diagram.)

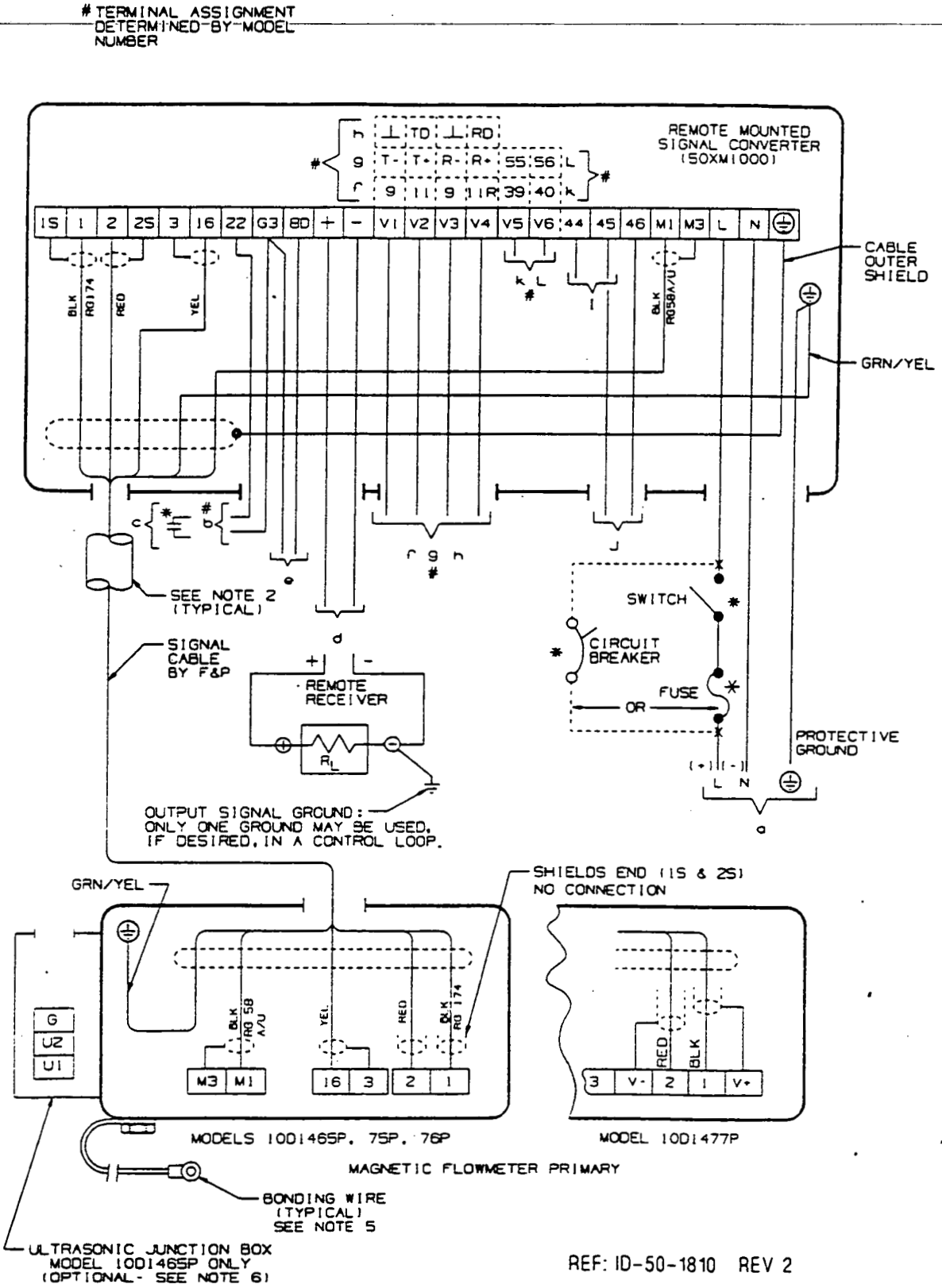

FIGURE 2-6. INTERCONNECTION WIRING FOR REMOTELY MOUNTED SIGNAL CONVERTER MODELS 10D1465, 10D1475, 10D1476 AND 10D1477 (Refer to the following page for applicable text.)

000251

TERMINAL ASSIGNMENT TABLE

a) POWER SUPPLY - 120/240 V, 50/60 HZ, SINGLE PHASE
OR 24 V dc(AS SPECIFIED ON NAME PLATE)
NOTE: 240 V SUPPLY NOT FM APPROVED.

b) MAY FUNCTION AS EITHER ZERO RETURN OR TOTALIZER RESET, AS SPECIFIED BY MODEL NUMBER.

c) FIELD CONTACTS-IF USED AS ZERO RETURN FIELD CONTACTS TO CLOSE WHEN METER SUPPLY PUMP OR VALVE STOPS FLOW THRU METER. WHEN USED FOR TOTALIZER RESET, CONTACTS TO MOMENTARILY CLOSE TO INITIATE. TERMINALS 22 & G3 REMAIN OPEN IF NOT USED.

d) OUTPUT SIGNAL = 4-20 mA
CURRENT OUTPUT R_L = <750 OHMS

e) 0 TO 10 K Hz, ACTIVE TTL, 5m (15 FT) MAX CABLE LENGTH

f) SCALED PULSE OUTPUT, ACTIVE, 24Vdc LOAD >150 OHMS
TERMINAL 9 & 11, FORWARD FLOW
TERMINAL 9 & 11R, REVERSE FLOW

g) DATA LINK RS 485

h) DATA LINK RS 232C

i) REVERSE FLOW INDICATION - VIA RELAY CONTACT ● ●

j) FORWARD FLOW INDICATION ----SAME AS ABOVE

k) ALARM CONTACT ● ●

L) OPTO COUPLED SCALED PULSE FORWARD - <10mA, <28Vdc.

NOTES:

1. * INDICATES SUPPLIED BY CUSTOMER.
2. ALL WIRING TO BE ENCLOSED IN METAL CONDUIT SUPPLIED BY CUSTOMER
3. UNUSED CONNECTIONS MUST BE PLUGGED TO MAINTAIN NEMA 4 RATING
4. ALL CONDUIT CONNECTIONS ARE 1/2" NPT.
5. METER GROUND BONDING STRAPS ARE USED TO PREVENT STRAY ELECTRICAL CURRENTS FROM PASSING THROUGH THE METERED LIQUID. SEE INSTRUCTION BULLETIN FOR DETAILS.
6. WHEN ULTRASONIC CLEANING IS SPECIFIED, REFER TO LB. 55UC2000.

REF: ID-50-1810 REV 2

INSTALLATION REQUIREMENTS

FM APPROVED

THIS IS NONINCENDIVE EQUIPMENT WHICH IS SUITABLE FOR INSTALLATION IN CLASS I, DIVISION 2, GROUP A, B, C & D, HAZARDOUS (CLASSIFIED) LOCATIONS.

WARNING

DO NOT DISCONNECT WIRING, REMOVE OR REPLACE COMPONENTS OR ASSEMBLIES WHILE CIRCUITS ARE ALIVE, UNLESS AREA IS KNOWN TO BE NONHAZARDOUS.

NON-HAZARDOUS LOCATION WIRING SHALL COMPLY WITH ANSI/NFPA 70, NATIONAL ELECTRICAL CODE, AND LOCAL CODE REQUIREMENTS.

CLASS I, DIVISION 2 EQUIPMENT AND WIRING SHALL BE INSTALLED IN ACCORDANCE WITH ANSI/NFPA 70, ARTICLE 501.

THIS EQUIPMENT HAS "NONINCENDIVE CIRCUIT FIELD WIRING" CONNECTIONS IN ACCORDANCE WITH ANSI/ISA S12.12, FOR USE IN CLASS I AND II, HAZARDOUS (CLASSIFIED) LOCATIONS, ALLOWING ORDINARY LOCATION WIRING PER ANSI/NFPA 70, ARTICLES 501-4(b) EXCEPTION.

DEFINITIONS:

EQUIPMENT SUPPLYING ENERGY TO NONINCENDIVE CIRCUIT(S).

Voc = MAXIMUM OUTPUT VOLTAGE
Isc = MAXIMUM OUTPUT CURRENT
Ca = MAXIMUM ALLOWABLE CAPACITANCE
La = MAXIMUM ALLOWABLE INDUCTANCE

EQUIPMENT RECEIVING ENERGY FROM NONINCENDIVE CIRCUIT(S).

Vmax = MAXIMUM INPUT VOLTAGE
Imax = MAXIMUM INTPUT CURRENT
Ci = MAXIMUM INTERNAL CAPACITANCE
Li = MAXIMUM INTERNAL INDUCTANCE

INTERCONNECTING FIELD WIRING.

Ccable = TOTAL CABLE CAPACITANCE
Lcable = TOTAL CABLE INDUCTANCE

NONINCENDIVE CIRCUIT FIELD WIRING PARAMETERS:

NOTE: NONINCENDIVE CIRCUIT FIELD WIRING PARAMETERS ONLY APPLY TO CIRCUIT TERMINALS IDENTIFIED BY A DOUBLE ASTERISK (**).

** CONTACT TERMINALS: Vmax = 32.0 Vdc Imax = 110 mA
Ci = 0 La = 0

EQUIPMENT SUPPLYING THESE CONTACTS SHALL BE FACTORY MUTUAL RESEARCH APPROVED, AND DESIGNATED AS "AIS" (ASSOCIATED INTRINSICALLY SAFE APPARATUS), OR "ANI" (ASSOCIATED NONINCENDIVE EQUIPMENT), AND SHALL HAVE:

$V_{oc} < V_{max}$, $I_{sc} < I_{max}$, $C_a > C_{cable}$, AND $L_a > L_{cable}$.

WHEN CABLE PARAMETERS ARE UNKNOWN, THE FOLLOWING VALUES MAY BE USED:

CAPACITANCE (Ccable): 60 pF/ft (200 pF/m)
INDUCTANCE (Lcable): 0.20 uH/ft (0.66uH/m)

IT IS THE USERS RESPONSIBILITY TO VERIFY THE SUITABILITY OF ALL EQUIPMENT AND WIRING FOR USE IN A CLASS I, DIVISION 2, HAZARDOUS (CLASSIFIED) LOCATION.

FIGURE 2-6. INTERCONNECTION WIRING FOR REMOTELY MOUNTED SIGNAL CONVERTER MODELS 10D1465, 10D1475, 10D1476 AND 10D1477 (Refer to the previous page for applicable diagram.)

3.0 OPERATION

3.1 Start-Up

3.1.1 Calibration Data

The flowmeter and its associated Model 50XM Signal Converter function as a complete flow metering system and therefore the respective flowmeter/converter combination must be installed and operated as a dedicated unit. Each flow metering system is precisely calibrated at the factory in accordance with customer specified flow parameters. The data recorded at calibration is listed on the tags attached to the signal converter. Typical data and calibration tags are shown in Figures 3-1 and 3-2.

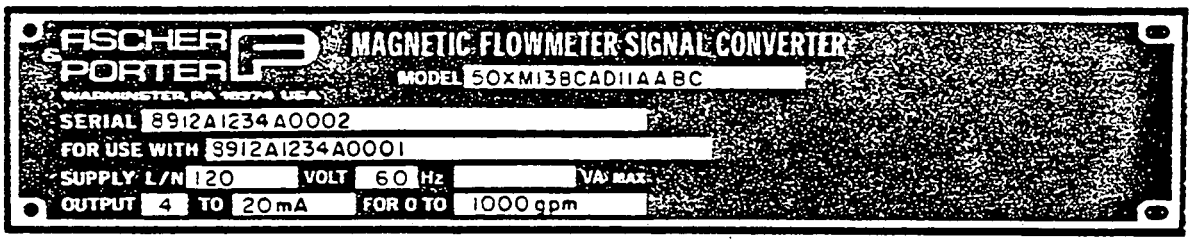

SD-99-1905

FIGURE 3-1. TYPICAL DATA TAG, REMOTELY MOUNTED CONVERTER

ON SIG CONVERTER PC ASSY

Span Fwd	56.60 %	Span Rev	56.62 %
Zero			
I @100%	101.0 %	I @20%	20.0 %

SI-6857

FIGURE 3-2. TYPICAL 50XM CALIBRATION TAG

Typically, the flowmeter and its converter will have either the same or sequential serial numbers. For example, if the signal converter is integrally mounted with the meter, then both the meter and the converter would be assigned the same serial number such as 93W012443. However, if the converter is remote mounted, then the meter would be assigned 93W012443 and the converter 93W012444, with the designated serial numbers referenced on the converter data tag as shown in Figure 3-1.

Because the flow metering system is precalibrated, it is generally ready for on-line service as received. To place the flow metering system in operation, proceed as outlined in Sub-Section 3.1.2.

In the event that the specified system flow parameters or engineering units are to be changed, the signal converter must be reconfigured to agree with the revised flow values. The procedure is outlined in Sub-Section 3.2.

Should it be necessary to replace the signal converter assembly, the operator should record the operating parameters because these values must be entered in the replacement converter. The replacement converter will also be factory calibrated, eliminating field calibration requirements. Simply enter the noted operating parameters and the system can be returned to service.

3.1.2 Flow Measurement

To place the flow metering system on-line, proceed as follows:

1) Verify that the signal converter has been properly mounted and that system interconnection wiring has been completed correctly, as discussed in the Section 2.0. It will be necessary to remove the instrument housing covers temporarily to permit access for inspection of system wiring and to verify normal operation. Improper wiring may result in blown fuses and/or converter damage.

2) Check that the external power source connected to the signal converter is compatible with the power requirements of the signal converter. The converter power requirements are stated on the name tag affixed to the converter housing.

3) Apply power to the signal converter. Because the flowmeter is driven by the signal converter, the meter will be energized also.

4) Using the Step, Data and C/CE keys on the front of the signal converter, verify that system operating parameters have been correctly entered. (Use of the keys is described in Sub-Section 3.2.) This data can be verified with the signal converter operating in the monitor mode. Refer to the flow parameter values given on the F&P manufacturing specification sheet (identified by serial number).

5) Initiate a minimal flow through the process pipeline for several minutes to purge entrapped air from the piping system. Flow rate indication should be displayed on the signal converter readout concurrent with flow start-up. (Accurate measurement cannot be expected until all air has been purged from the process pipeline. If desired, after the pipeline has been purged of air, the flow totalizer can be reset to zero as described in Sub-Section 3.18.)

6) When system operation appears normal, stop flow measurement and replace all housing covers. Log the flow total displayed on the LCD readout or reset flow totalizers. Process measurement will commence with the initiation of flow through the meter.

3.2 Configuration Procedure

The unit has been pre-configured at the factory per the specifications given at the time the order was placed. However, parameters can be changed using the procedure described in this section. Note that the firmware version described is D.10, other versions may show slightly different displays and options.

> CAUTION
> Do not power the unit with the terminals M1 and M3 connected without also connecting terminals 3 and 16. Fuse failure and possible converter damage will result.

> NOTE
> Replacement fuses must be the same as the original type supplied with the converter (i.e., 5x20 mm "T" type), LITTELFUSE type 218. Other type fuses may blow as power is applied.

> NOTE
> Additional configuration information and a typical Test Wiring Diagram are provided in Section 5.0.

All data base interrogations and changes are addressed through three pushbuttons. They are identified as "Data", "Step", and "C/CE" (refer to Figure 3-3). To gain access to the data base, it is necessary to leave the normal "monitoring mode" and enter the "configuration mode". This is accomplished simply by pressing the pushbutton on the right which is identified as the "C/CE" pushbutton. The various parameters of the data base can then be viewed by moving up or down through the menu by pressing one of the two buttons to the left of "C/CE" identified as "Data" and "Step". Data is accessed and changes entered by pressing the "Data" and "Step" pushbuttons simultaneously. This simultaneous action constitutes the "Enter" function. If no entries or changes are made within 20 seconds the unit will automatically revert to the monitoring mode.
When the "C/CE" button is pressed while the unit is in the monitoring mode, the flowrate and totalization in the display will be replaced by a data base parameter. The name of the parameter will appear on the top line, and the changeable value on the bottom line.

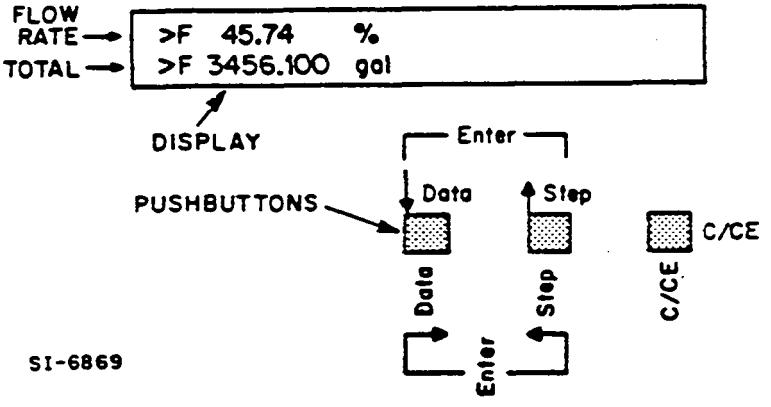

FIGURE 3-3. 50XM DISPLAY AND PUSHBUTTONS

Program protection is a feature that allows the unit to be placed in the Configuration Mode so that all the parameters in the data base can be evaluated but cannot be changed. This protection is automatically enabled each time power is applied to the converter. The following message will appear in the display the first time the C/CE button is pressed after power has been applied.

```
Prog. protection
on
```

To remove the PROGRAM PROTECTION simply press the Enter buttons, and the message in the display will be changed to the following.

```
Prog. protection
off
```

It is now possible to step through the data base and make changes to it. It should be noted that if Prog. Protection is "on" and an attempt is made to change a parameter listed in the menu, the display will indicate:

```
* ERROR *
PROG. PROTECTION
```

There are two ways to make changes to the data base. One is by entering numeric values, and the other is by making a selection from the menu. Numbers are entered by pressing the "Data" and "Step" buttons. The "Data" button is used to select numbers 0 through 9, decimal point, minus sign, or a blank space. The "Step" button is used to move to the next digit.

Access to the data base must be gained by pressing the "Data" and "Step" buttons simultaneously. When the "Enter" buttons "Data" and "Step" are pressed, a cursor is added to the right of the data on the bottom line of the display if selection is to be made from the menu.

```
Meter size
25 mm    1 in      _
```

It is now possible to "step" through the menu by pressing the "Data" or "Step" button to go forward or backward to find the correct item in the menu. Once it is found, press the "Enter" buttons again, and the item will be entered into memory.

When the parameter to be changed is a numerical value, the top line will again list the parameter name, and the bottom line will show the cursor on the left and the units on the right as shown.

```
Range >F
_0_ gpm
```

The number "0" over the cursor will now increase by one each time the "Data" button is pressed. If it is pressed when the number "nine" (9) is over the cursor a decimal point (.) will appear. If it is pressed again a minus sign (-) will appear, and if it is pressed one more time a space will appear ( ). The number can only be increased. If the desired number is passed it is not possible to back up. It is necessary to continue the cycle of advancing the number until the desired value appears again. When the desired number appears above the cursor, simply press the "Step" button once

000256

and the cursor will move one space to the right. A zero will again appear over the cursor, and the next desired digit can be selected. If an error is made in the selection of a number it can be corrected by pressing the "C/CE" button. The entry will be cleared, and a new entry can be made. (This functions the same as a hand held calculator.)

When the desired value is reached, press the entry buttons and the value will be entered into memory. It will then be evaluated by the computer, and if it is not compatible with other selected parameters it will be rejected. An ERROR message will appear in plain language to announce why the entry is not acceptable.

3.3 Changing Parameters

The following section is devoted to the configuration procedure for each changeable parameter. Some items are not accessible even though they appear in the menu. They are "locked out" and are indicated by a series of asterisks on the second line of the display. These locked parameters will be pointed out in the following discussion. Each parameter will be discussed briefly to promote an understanding of that function as well as the procedure for its configuration. The following parameters are presented in the order in which they appear in the menus.

3.3.1 Language

Messages and data can be shown in the display in nine different languages. Changing languages affects only the text that appears in the display. It does not affect any of the engineering units. The languages are selected by pressing the Data or Step key to step through the menu and enter the desired language. Languages available are: English, Danish, Dutch, Finnish, French, German, Italian, Spanish and Swedish.

```
Language
English
```

3.3.2 Meter Size

All calibration factors for meters 1/10 through 14 inches are identical by size for Flowmeter Models 10D1465P, 10D1475P, 10D1476P, 10D1477P and 10DX3000A. The suffix letters denote design levels for which these models have constant calibration factors per size. For those meters, the meter size function may be used. For meters built to earlier design levels, the meter size function will be locked out, and a message will be displayed as shown below. When meter size is locked out, the cal factor or meter capacity stamped on the meter nameplate must be entered in the Cal Factor parameter.

```
Meter size
********
```

Typically, if the Meter size function is available the display will show the following for a size 10 inch flowmeter. A listing of available meter sizes is given in Table 3-3.

```
Meter  size
250 mm   10 in.
```

Pressing the ENTER keys will cause the cursor to appear on the lower line to the right of the size. Press either the Data or Step key to step through the menu of sizes. When the desired size is reached, press the Enter keys again. The size will be entered into memory. At this point, the computer will enter the calibration factor for the selected size as it is recorded in the EPROM. This value will also be entered under the forward and reverse ranges.

000258

3.3.3 Cal Factor/Meter Capacity

In order for the converter to produce the proper flow rate output(s), calibration information from the associated flowmeter must be known. This information has been determined at the factory and is entered in the converter non-volatile memory as "Cal-Factor". Depending on the flowmeter model number and size, the Cal-Factor is determined as the amount of flow necessary to produce a converter velocity signal of either 10 meters/second or 33.33 feet/second. In most cases, the flowmeter is factory calibrated so that the flow rate which produces this velocity is a fixed value ("constant meter factor per size") as a function of meter size. This permits the converter to be set up by the user by simply entering the size of the flowmeter. The appropriate maximum velocity is factory set to 10 meters/second for the model 10DX3000 Series Flowmeters and 33.33 feet/second for all other models (e.g., 10D1400 Series). In the case of the 10DX3000 Flowmeters, the term "Meter Capacity" is used to mean "Cal-Factor".

The converter is configured to permit entry of a programmable calibration factor. When the calibration factor stamped on the flowmeter tag is different than the fixed value shown in the flowmeter instruction bulletin, the value on the flowmeter tag must be entered in the "Cal-Factor" parameter.

The capacity of the meter is expressed in units such as gpm, l/m, or mgd and is called the calibration factor. Some meters may have a meter factor recorded instead of the calibration factor. These can be converted to calibration factors in gpm (at 33.33 ft/s) by using the following equation:

$$\text{Cal Factor} = (\text{Meter Factor})^2 \times 81.6$$

The calibration factor is the base upon which the computer establishes maximum and minimum limits for range settings and outputs. A typical calibration factor for a size two-inch flowmeter might be 268.4 gpm. It will appear in the display as shown below.

```
Cal-fact
268.400  gpm
```

If the units (gpm) are not the required units step through the menus to "Submenu Units" and enter the correct value under "Range Unit" (refer to Sub-Section 3.3.12). To enter a calibration factor, press the Enter keys. The number 268.400 will disappear and will be replaced by the cursor. The unit "gpm" will remain. Enter the cal factor value, as it appears on the flowmeter nameplate, and press the Enter keys. The new calibration factor will be entered into memory. This value will also be entered into the forward and reverse range settings. The Pulse factor (to be discussed later) will be set to one pulse per engineering unit.

3.3.4 Range

There is a table of flow units in the EPROM from which the range units can be selected (see Sub-Section 3.3.12). A listing of units available with firmware D.10 is given in Table 3-1. Each unit is normally available in seconds, minutes, or hours. For example, L/s, L/min, or L/h. US gallons are available in minutes, hours, or in million gallons per day. (Units are added or deleted periodically as firmware is updated.)

```
Range
gpm _
```

To select the range unit from this menu, first enter the configuration mode by pressing the C/CE button. Next, use the Data or Step keys to move through the data base until "Submenu - Unit" appears on the display (refer to 3.3.12), and then press the Enter keys. Use the Data or Step keys again to go through the Submenu-Unit until "Range Unit" appears, press ENTER. Use the "Step" key to toggle through the menu until the desired range unit appears on the bottom line of the display. Press the ENTER keys again and the selected unit is placed in memory. No further action is required. After about 20 seconds, the display will be automatically returned to the monitoring mode. Pressing the C/CE button will return the display to the monitoring mode immediately.

Entering the cal factor automatically sets both the forward and reverse ranges equal to that value. Note that this is the flow value at 33.33 ft/s (higher than what normal flows are in practical applications). Consequently, the range must be set to the actual maximum flowrate for the application. The value for the reverse direction will be the same as the value for the forward direction. If the unit is set for unidirectional flow the reverse flow will be locked out with asterisks as discussed previously in Meter Size.

For the cal factor setting of 268.4 gpm, the display appears as follows:

```
Range
268.400 gpm
```

The actual range can now be set in the same manner as the cal factor. Any value can be set between 2% and 100% of the cal factor. If a higher or lower setting is attempted an error message will appear in the display, and the new value will be rejected. For example, 4 gpm is below 2% of 268.4 gpm. If an attempt is made to enter 4 gpm as the range setting the following message will appear in the display.

```
Error - 11
< 0.02 Range DN
```

Range DN is the Cal Factor. The Cal Factor times 0.02 is 2% of the value that can be entered. The message says that the value we attempted to enter is below 2% of the Cal Factor, and it will not be accepted. The procedure for entering the range for the reverse flow is the same as for the forward flow.

There is an additional error message related to range settings that applies to both forward and reverse ranges. That message is FLOW> 130%, and it appears when the actual process flow exceeds the maximum range setting by 130% for any reason. This could happen because the range was set too low for the actual flow or because a valve failed or was improperly positioned. The message would appear as shown below. Between 100% and 130%, the output signal will accurately reflect the flow rate.

```
Flow > 130%
> F 6359284 gal
```

000260

TABLE 3-1 RANGE UNITS
l/s
l/min
l/h
hl/s
hl/min
hl/h
m^3/s
m^3/min
m^3/h
igps
igpm
igph
mgd
gpm
gph
bbl/s
bbl/min
bbl/h
bls/day
bls/min
bls/h
kg/s
kg/min
kg/h
t/s
t/min
t/h
gram/s
gram/mi
gram/h
ml/s
ml/min
ml/h
Ml/min
Ml/h
Ml/day
lb/s
lb/min
lb/h
uton/min
uton/h
uton/day
**kgal/s
**kgal/min
**kgal/h

TABLE 3-2 TOTALIZER UNITS
l (liter)
hl (hectoliter)
m^3 (cubic meter)
igal (imperial gallon)
gal (US gallon)
mgal (million US gallon)
bbl (barrel=31 gal)
bls (barrel=42 gal)
kg (kilogram)
t (metric ton)
gram (gram)
ml (milliliter)
Ml (megaliter)
lb (pound)
uton (US ton)
**kgal (US thousand gallons)

* = Not available in the US
** = Configurable unit

TABLE 3-3 METER SIZES	
mm	inches
1	1/25
* 1.5	1/17
2	1/12
3	1/10
4	5/32
* 5	3/16
6	1/4
* 8	5/16
10	3/8
15	1/2
* 20	3/4
25	1
* 32	1 1/4
40	1 1/2
50	2
* 65	2 1/2
80	3
100	4
* 125	5
150	6
200	8
250	10
300	12
350	14
400	16
450	18
500	20
600	24
* 700	28
750	30
* 800	32
900	36
* 1000	40
1100	42
1200	48
* 1300	51
1400	54
1500	60
* 1600	64
1700	66
1800	72
2000	78
* 2100	82
* 2200	86
* 2300	90
* 2400	94

3.3.5 Pulse Factor

The pulse factor is used to select the number of pulses per engineering unit for totalization purposes. It functions whether or not the pulse output option is selected and operates equally on the internal and the external totalizer. If the unit is set for unidirectional flow the pulse factor in the reverse direction will be locked out. As an example, note what happens as the number of pulses per gallon is changed. Call up Pulse factor, and the display might look like the figure below.

```
Pulse  factor
10.000 / gal
```

The internal totalizer display is always direct reading so that at one pulse per gallon the totalizer will add one count for each pulse applied to it. We can select a factor of ten pulses per gallon and there will be ten pulses arriving at the totalizer for each gallon. Keep in mind that these units can be gallons, barrels, liters or whatever is selected from the units menu. Each pulse now represents 1/10 of a gallon. The totalizer will still add a count for each arriving pulse, but a decimal will be added so that the display reads in gallons and tenths of a gallon.

If we select 100 pulses per gallon then each pulse represents 1/100 of a gallon, and the decimal will appear at the proper point to show totals in hundredths of a gallon. See below for units of 1/10 gallon.

```
> F 45.75%
> F 34864.8 gal
```

NOTE

This is a seven digit counter, and as it fills up, the decimal will be continually moved to the right until only whole units are displayed.

Although selecting multiple pulses per engineering unit is practical for low flows, it creates readability problems at high flows. The higher flows could cause the totalizer to add counts so rapidly that the last digit or two would be unreadable. What is needed to slow down the totalizer is for each pulse arriving at the counter to represent more than one gallon. For example, at one pulse per ten gallons (select factor 0.1) the totalizer will receive a pulse every ten gallons, and the last digit on the right will always be a zero. The count will change every ten gallons (10, 20, 30, etc.). For one pulse equal to 100 gallons, (select factor 0.01), the last two digits will be zeroes, and the totalizer will change every 100 gallons.

3.3.5.1 Allowable Pulse Factors

Pulse factors can be selected for any value between 0.001 to 1000. Which factor to select is generally determined by the application requirements. However, there are two restrictions that must be considered.

First, the maximum pulse output frequency at 100% of the converter span is 4 kHz. The internal counter operates at this frequency independent of the pulse width selection for the external readout device. The following discussion applies to the internal counter as well as to an external high frequency counter. The suggested maximum count to these devices is limited to 4,000 pulses per second. Consider a max flow of 240,000 gpm (4,000 gal/s). With this flow, the highest pulse factor that could be used would be one pulse per gallon.

$$4{,}000 \text{ gal/s} \times 1 \text{ pulse/gal} = 4{,}000 \text{ pulse/s}$$

000262

However, the converter will normally function properly up to 130% of the range setting. This means that for a range setting of 4,000 gal/s (and 4000 pulses/s at 100%) a proper output signal will be generated for flows up to 5,200 gal/s (4,000 X 1.3 = 5,200). The analog value at 130% of the range setting will be 24.8 mA dc. Although this condition is acceptable, it is not considered good practice.

Ideally, a pulse factor should be selected to keep the pulses to the counter within the 4,000 per second limit. For example, if we apply a pulse factor of 0.1 to the above example then each pulse will represent 10 gallons, and the pulses at the counter will be within 4,000 per second.

4,000 gal/s X 1.3 X 0.1 pulse/gal = 520 pulses/s

Second, electromechanical counters typically require a pulse width of 30 milliseconds or more and are limited to about 15 counts (pulses) per second. They require time between pulses to complete the mechanical operation of moving a wheel to its next count position. If there is not sufficient time between pulses to do this the counter will jam. A high pulse factor could create a condition where an external electromechanical counter would jam while the internal counter would continue to operate. Because the ERROR message is based upon 4 kHz (operating frequency of internal counter), there would be no alert to signal this condition.

A conservative approach would assume a 50 millisecond on time and 50 milliseconds between pulses at maximum flow. This gives 100 milliseconds total time for each pulse or ten pulses per second. Consider a flow of 750 gpm or 12.5 gal/s.

12.5 gal/s X 1 pulse/gal = 12.5 pulses/s

The converter can operate up to 130% of range setting!

12.5 gal/s X 1.3 X 1 pulse/sec = 16.25 pulses/s

This condition would not generate an ERROR message, but it could cause the electromechanical counter to jam. It would operate normally up to the maximum range setting, and as the flow approached 130% of the range setting, the counter could jam. The internal counter would continue to count.

3.3.5.2 Pulse Factor Summary

The important thing to remember about pulse factor selection is that the high frequency output is limited to 4,000 counts per second and the external electromechanical devices are limited to about 15 counts per second. Also, remember that the internal counter operates independently of the pulse width selection and the external counter. To select a pulse factor, convert flowrate to units per second. Then multiply by 1.3 to determine flowrate at 130% of range setting. This cannot exceed 5200 per second for high frequency devices or 15 counts per second for electromechanical counters. Select a pulse factor that will keep the counts within these limits.

CAUTION
The sequence in which the range and pulse factor are selected are important. The range must be selected first and then the pulse factor. If the pulse factor is selected first or is not reset when a range change is made, the frequency to the totalizer could exceed the limits discussed above.

3.3.6 Pulse Width

If the pulse output option is selected the output pulse width can be adjusted between 0.032 and 2000 milliseconds. For driving an electromechanical counter, the pulse width should be about 50 milliseconds. For high speed electronic devices, a pulse width of about 50 microseconds (0.050 milliseconds) is typical.

Step through the menu until Pulse width appears in the display. The present pulse width will be displayed. Press the ENTER keys, and the value will be replaced by the cursor which will be at the left of the display. All values are in milliseconds. To enter a microsecond pulse width, place a decimal point three places to the left of the numerical value. For example, a 50 microsecond pulse width would be entered as 0.050 milliseconds, as follows:

```
Pulse  width
0.0500 ms
```

3.3.7 Low Flow Cut-off

This feature allows for setting the low flow cut-off point in terms of percent of the full scale range setting. The cut-off causes the input signal to drop to a zero condition (4 mA dc for a 4-20 mA dc output) when the flow drops below the set value. This value can be set at 0 to 10% of the full scale range setting. Typical values are 1 or 2%. If a value greater than 10 is attempted it will be rejected, and an error message will appear as shown below.

```
Error - - 16
Input > 10
```

3.3.8 Damping

Damping effectively controls the speed at which the signal converter responds to changes in flow. Without damping, it will show a 100% change in flow in about 1 second. By entering various values for damping, the full scale response can be slowed to as much as 99 seconds. This is not a linear function. Consequently, response will be faster in the first few seconds of the damping interval than during the last few seconds. Damping is sometimes used to smooth out pulsating flow signals that are caused by pumps and to reduce output oscillations that are created by process generated noise.

```
Damping
10.0000 s
```

Damping is a numerical value entry, and it is changed in the same manner as the range and other numerical units. Values greater than 99.9999 seconds will prompt an ERROR message.

3.3.9 Filter

A digital filter is available in the firmware to provide a steady indication of flow and analog output for pulsating flows or noisy signals. With the filter switched on, damping settings can be reduced. Response time effected by activating this parameter is minimal.

000264

```
Filter
on/off
```

3.3.10 Density

If kg, tons, grams, US tons or pounds is selected for the range or totalizer units a density value can be entered. The density can be entered between the values of 0.00001 and 5 g/cm^3. This is used as a factor against the range setting and the Cal Factor. For example, if the range setting is 250 kg/min a density setting of 2.00000 g/cm^3 will change the range setting to 500 kg/min. Therefore, the pulse factor must be based on 500 kg/min.

```
Density
1.00000 g/cm3
```

Density is a numerical value. It is entered in the same manner as the range setting. If values entered are not within the limits listed above an ERROR message will result.

> NOTE
> It is important to make changes to the parameters discussed up to this point in the order in which they have been presented. This will simplify the task and minimize the margin of error. From this point on, the order in which parameters are configured is less important.

3.3.11 System Zero Adjustment

This adjustment is required for flowmeters that are converted for use with a 50XM1000 Signal Converter. To make the adjustment, the flowmeter must be set up in a full pipe, no flow condition. Then call up the System zero adj. feature which should appear as shown below.

```
System zero adj.
0.0000 Hz
```

To access the zero adjustment, press the ENTER keys, and the display will show:

```
Adjust  ?
yes-----> Enter
```

Press ENTER and the option to adjust manually or automatically will be offered.

```
Adjust
Automatic?
```

Select automatic, and press Enter again. The zero will be adjusted. During the adjustment procedure, the display will show a count down four times from 255 to 0. At the end of the count down, a frequency value will appear. If the value exceeds 500 Hz an ERROR message will appear, and an adjustment to the flowmeter or converter may be required. Record the value. If the converter is changed, this value can be entered into the new converter manually. It will not be necessary to set up a "full pipe no-flow" condition for this situation.

If it becomes necessary to replace the converter assembly, the meter zero value must be entered in the replacement converter. On some meters, this value is noted on a sticker attached to the inside of the converter junction box (behind the terminal block). To adjust zero manually, select Manual operating mode and press Enter. Next, encode the applicable zero value (as given on the sticker in the junction box) and press Enter to complete the procedure.

3.3.12 Submenu - Unit

Functions associated with selection of rate and totalizer units appear in this submenu.

```
Submenu
Unit
```

Press enter and the following will appear.

Range Unit

```
Range unit
gpm
```

A listing of available units is given in Table 3-1. To select a range unit from Table 3-1, enter the configuration mode by pressing the C/CE key. Next, use the Data or Step keys to move through the parameters until "Range unit" appears on the top line of the display and press the ENTER keys. Use the Data or Step keys to move through the menu until the required unit appears on the bottom line of the display. Press ENTER and the selected unit is entered in memory.
Selection of this submenu also allows the user to construct and enter any flow unit not available from the normal menu selection. This unit may be used for range selection in conjunction with time units of seconds, minutes or hours. The default unit is "kgal" (thousands of US gallons). The "kgal" unit may also be selected for the totalizer, and can be used in preventing frequent totalizer overflow on large size meters.
Configuration of a flow unit (not in the menu) requires entry of the text of the unit description and a conversion factor indicating how many liters the unit contains.
Pressing C/CE twice will return the display to monitor mode. Press the step key and the following will appear.

Totalizer unit

```
Totalizer unit
gal
```

A listing of available units is given in Table 3-2. The totalizer units available are the same as those for the range units except they do not include units of time. Selecting the totalizer units is the same procedure as for selecting range units. Press the step key and the following will appear.

Flow

```
Flow
gpm
```

The upper line of the display is used to indicate flowrate in the monitoring mode. It can be expressed in % or in direct engineering units. Step through the menu until Flow appears on the upper line of the display. Because gpm was selected for range units in the previous example, that is the unit that appears here. The only selections available for this parameter are this engineering unit or %. Press the ENTER keys, and the cursor will appear to the right of gpm. Now press either the Data or the Step button, and the value will change from the engineering units shown to %. Press the ENTER keys again, and the change is entered into memory. Press the step key and the following will appear.

Unit Factor

unit factor 3785.4 liter

This parameter is used to enter the numeric value representing the number of liters contained in the configured flow unit. Refer to the example given in Unit Name. Press the step key and the following will appear.

Unit Name

Unit name kgal /s/min/hr

This parameter is used to configure the text representative of a unit not listed in the menu. For example, to enter a unit for US ounces and designate it as "oz". The conversion factor may be calculated as: 3.785 liters (1 gallon) are equal to 128 oz (1 gallon). Press ENTER and using the step and data keys, the letters of the alphabet in lower case and upper case are sequentially displayed. To enter "oz" , press ENTER and then use the data key to move to "o". Then press the step key to move the cursor to the right. Press the data key until "z" appears. Press ENTER to complete the entry.

Next, press the data key and Unit factor will appear. Enter the numeric value 0.02957 (3.785 ÷ 128). This unit may also use a density other than 1.00 g/cm^3 by selecting "with density" in the following parameter Program Unit. Press the step key and the following will appear.

Program Unit

Prog. unit without density/with density

This parameter allows a density to be entered if required. To enter a density select "with density". Refer to the density submenu described in Sub-Section 3.3.10 to enter a density value.

000268

3.3.13 Submenu - Alarm

This Submenu provides for indication and configuration of the converter's response to various types of alarm conditions. Press ENTER and the following will appear.

3.3.13.1 Maximum Alarm

```
Max alarm
> 130%
```

Maximum alarm can be set between 0 - 130% of range. Values can only be entered in whole numbers. If the flow rate exceeds the alarm setting, a message will appear on the display. A form C (normally open/normally closed) alarm contact may be configured at terminals 44, 45 and 46 of a remotely mounted enclosure. The percentage of range required to activate the alarm is entered in this parameter. When the flow exceeds the entered value, a flashing upward pointing arrow will appear to the right of the flow direction symbol. Press the step key and the following will appear.

3.3.13.2 Minimum Alarm

```
Min alarm
< 0%
```

Minimum alarm can be set between 0 - 130%. Values can only be entered in whole numbers. If the flow rate falls below the alarm setting, a message will appear on the display. A form C (normally open/normally closed) alarm contact is available at terminals 44, 45 and 46 of a remotely mounted enclosure. The percentage of range required to activate the alarm is entered in this parameter. When the flow is less than the entered value, a flashing downward pointing arrow will appear to the right of the flow direction symbol. Press the step key and the following will appear.

3.3.13.3 Error Log

```
Error log
```

The Error Log records the code number of any alarm conditions as they occur. For example, if the flow exceeds 130% of the range setting, the error code is the number 3. This number would appear in the error register along with the code numbers of any other alarms that have occurred. Toggling the step key will display the error number and description of the error The code numbers are cleared from the error register by pressing the Enter keys.

Error No.	Display	Cause
0	Empty Pipe	Empty Flowmeter
1	A/D Overload	A/D converter over ranged
2	REF Too small	Pos or Neg ref voltage too low
3	Flow 130%	Flow is greater than 130%
4	External Switch-off	Zero Return activated
5	NVRAM Defect	Error in NVRAM data
7	REFp Too Large	Positive reference voltage too large
8	REFp Too Large	Negative reference voltage too large

Press the step key and the following will appear.

000269

3.3.13.4 Function V8, V9

Function V8, V9

Various alarm functions can activate contacts V8 and V9. For converters that are remotely mounted, terminals 45 and 46 represent V8 and V9 and opposite contact conditions occur between terminals 44 and 45. If the converter is integrally mounted, terminals E9 and C9 represent V8 and V9. Press ENTER and the following will appear.

F/R- Signal

Function V8, V9 F/R- Signal

This is a default parameter. Forward flow direction closes contacts 45 and 46. Reverse flow closes contacts 44 and 45. Press the step key and the following will appear.

Maximum Alarm

Function V8, V9 Max.alarm

Selecting this parameter will activate contacts V8 and V9 under a maximum alarm condition. Refer to Sub-Section 3.3.13.1. Press the step key and the following will appear.

Minimum Alarm

Function V8, V9 Min. alarm

Selecting this parameter will activate contacts V8 and V9 under a minimum alarm condition. Refer to Sub-Section 3.3.13.2. Press the step key and the following will appear.

Max/Min Alarm

Function V8, V9 Max/min alarm

Contacts V8 and V9 will close when flow is above the maximum or below the minimum value. Refer to Sub-Sections 3.3.13.1 and 3.3.13.2. Press the step key and the following will appear.

General Alarm

Function V8, V9 General alarm

000270

Alarm contacts will activate if an error log condition occurs. Refer to Sub-Section 3.3.13.3. Press the step key and the following will appear.

Empty Pipe

Function V8, V9 Empty pipe

Contact closure indicates an empty pipe condition when this option is available. Press the step key and the following will appear.

No Function

Function V8, V9 No function

The V8 and V9 contacts are not activated by any condition.

3.3.14 Submenu-Current Output

The current output range is selectable. In addition to the 4-20 mA dc which is the normal output, 0-20, 0-10, 2-10, 0-5, 0-10-20 and 4-12-20 mA are available and selectable from the menu. In addition, the current output during an alarm condition can be set to either 0% or 130%. The display for these options appears initially as shown below. If 4 - 12 - 20 mA is selected, the 12 - 20 mA span indicates forward flow and 12 - 4 indicates reverse flow (12 is a "live" zero). If 0 - 10 - 20 mA is selected the 10 - 20 mA span indicates forward flow and 10 - 0 indicates reverse flow (10 is a "live" zero).

Submenu Current output

At this point, press the Enter keys, and the current output menu will be accessible. Move back and forth between the submenu items of current output and I_{out} at alarm using the Step/Data buttons. Select either by pressing the Enter buttons. Again, step through the submenu to select the appropriate current output or alarm output.

Current output 4-20 mA

Manual exit from any submenu is done in two steps. Pressing the C/CE button from either I_{out} at alarm or Current output will step the menu up to Submenu. Press "Data" or "Step" to continue in the configuring mode or press the C/CE button again to exit from the configuration mode. The unit will return to the monitoring mode on its own in two steps taking about 20 seconds between each step.

I_{out} at alarm sets the analog output to a low or high value as selected. In case of an operational failure, the computer activates an alarm, an error message is sent to the display, and the current output goes to the selected value. The selected value can be either 0% or 130% of the range setting. The I_{out} at alarm menu appears as shown below:

000271

I_{out} at alarm 0%

3.3.15 Submenu-Data link

If the Data link option has been installed it is configured by calling up the data link submenu which appears in the display as shown below. If the Data Link option has not been installed a "NOT AVAILABLE" message will appear.

Submenu Data link

If the Data link option is available, press the Enter keys, and the Communications menu will appear as shown below.

Communications ASCII

Press the Enter keys again, and select uDCI Binary, ASCII, Print5 charge or Print6 continuous. Refer to applicable instruction bulletin for information on optional document printers 5 and 6.

Press a Data or Step button, and the menu will change to the Baudrate menu as shown below.

Baudrate 2400 Bd

Press the Enter key, and select one of the following baud rates: 110, 300, 600, 1200, 2400, 4800, 9600, 14400, 28800.

Press a Data or Step button, and the menu will change to the instr. address as shown below.

Instr. address 0

Each converter included in the data link must be identified by a unique numeric address. These are limited to the numbers 000 to 031. An attempt to enter a number higher than 031 will result in an ERROR message. Refer to Section 6.0.

3.3.16 Submenu-Self Check

A number of self test routines are built into the converter. Some of these are firmware driven checks and some are performed with a combination of firmware and continuity checks.

NOTE
The converter is not "on line" during Self Check. This is a maintenance procedure, and data is not updated while the converter is in this mode.

000272

```
Submenu
Self check
```

Press Enter and the following should appear in the display.

```
Self check
Iout
```

Press Enter again, and Iout will disappear and the % sign will appear on the right in the bottom line. A percentage of the output can now be entered, and the analog output will go to that value. For example, enter 25, and the analog output will go to 8 mA dc. To exit the I_{out} test and any other Self Check test, press C/CE.

```
Iout
0%
```

Press Data and the NVRAM check should appear as shown below.

```
Self check
NVRAM
```

Press Enter and an NVRAM OK or an ERROR message will appear in the display.

Press Data and the EPROM check should appear as shown below.

```
Self check
EPROM
```

Press Enter and an EPROM OK or an ERROR message will appear in the display.

Press Data and the EEPROM check should appear as shown below.

```
Self check
EEPROM 93C46
```

Press Enter and an EEPROM OK or an ERROR message will appear in the display.

Press Data, and the following should appear.

```
Self check
Alarm contact
```

This test checks the alarm contact for operation. It can be tested for continuity with the alarm on in the same manner as the flow direction contact at terminals V5 and V6 in the remote converter.

Press Enter, and the display will show "Alarm contact" on the top line and either "Off" or "On" on the bottom line. Press the Data key to switch from "On" to "Off". Continuity should be present when the menu reads "On".

Press Data, and the following should appear.

Self check V8, V9 contact

Place an ohmmeter across terminals 44 and 45 in the remote connection box. Continuity should be present on terminals 44 and 45 for reverse flow and terminals 45 and 46 for forward flow. Press Enter, and reverse or forward will appear in the display. Press Data to change from one to the other.

Press Data, and the following should appear.

Self check Switch S206

The Switch S206 test is for factory use only

Press Data, and the following should appear.

Self check Data link

The Data Link check requires that jumpers be installed in the wiring so that the converter can transmit and receive its own signal. For the RS 232 link, place the jumper between terminals TD and RD. For the RS 485 link, place a jumper between terminals T- and R- and another between T+ and R+. These terminals are located in the converter customer connection box.

Press Enter. The computer will output 1000 characters of ASCII code 31 Hex ("1") and check the received characters. In the display, the output data count appears on the left, and the error data count appears on the right. After 1000 characters are sent, the computer ends the check on the received data and continues to transmit the value 31 Hex until the C/CE button is pressed.

Press Data, and the following should appear.

Self check F_{out}

A self test of the frequency output will test the 0 to 10KHz unscaled output, and the optional scaled pulse output if it is present in the converter. If it is necessary to thoroughly test the scaled output, some anomalies must be considered.

It is assumed that the self test will be performed on the installed system and not when connected to a flow simulator. When the former is the case, the scaled pulse output will be active for that flow direction indicated at the time the self test was invoked.

000274

Assume a bi-directional system set to a range of 60 gpm and a pulse factor of one per gallon. If the indicated flow was reverse 10 gpm when self-test Fout was invoked, then entering 100% will produce 1 pulse per second at terminals 9 and 11R and 10KHz at terminals 8D and ground (G3). No pulses will be present at 9 and 11. Negative entries are not permitted for a test value.

In order to have the above situation produce pulses at 9 and 11, it will be necessary to short the electrode signal (1 and 2) and use a negative manual system zero to place the converter output positive before invoking self-test. **Record any previous system zero value so it may be re-entered following self-test.**

Press Data, and the following should appear.

Self check Display

Press Enter, and the display will fill up with the numbers 1 through 0 and the letters A through F to show that the display is functional.

Press Data, and the following should appear.

Self check Zero return

This test checks the external contact operated Zero Return feature. Press Enter. The display should read "Zero return off". Place a jumper across terminals 22 and G3, and the display will change to "Zero return on".

Press Data again, and the following should appear.

Self check Totalizer reset

This check is only operable when the external totalizer option is present.

3.3.17 Submenu-Detector Empty Pipe

This feature is a factory installed option. It is designed to sense that the liquid in the flowmeter has dropped below the level of the electrodes. When this happens, the outputs are locked at zero flow (4 mA dc and 0 Hz typically) or 130% of range setting depending upon which of these values has been selected for the "Iout at alarm" condition. This feature cannot be used with model 10D1477 meters, small size meters, and/or with low conductivity process liquids.

This function is either ON or OFF. It is activated or deactivated by finding it in the menu and pressing the Enter keys. Next, press a Data or Step key to change from ON to OFF or vice versa. Press the Enter keys again to enter the selection.

In order to use this feature, certain adjustments must be made with the flowmeter installed in the pipeline under both full pipe and empty pipe conditions. First, call up the Empty Pipe Menu.

Submenu Detector e. Pipe

Press Enter and the display will show either an ERROR message if the option has not been installed or the menu as shown below.

Adjust Detector e. pipe

Press the Enter keys and a numerical value will appear in the display. With the pipe full of the process liquid, adjust potentiometer R813 on the Empty Pipe Detector Board (refer to Figure 7-7) until the value in the display reads 100.

At this point, drain the liquid from the pipe and note the value in the display when the pipe is empty. Calculate the threshold value using the following equation:

$$\text{Alignment value} = \frac{100 + \text{pipe empty value}}{2}$$

Press Step until Threshold appears in the display as shown below:

Threshold 070

Press Enter and change the numerical value that appears on the second line of the display to the alignment value calculated above.

3.3.18 Submenu Totalizer

The totalizer is reset and overflows cleared using this submenu. Totalizer "Standard" separates the totalizer into forward and reverse flow. Totalizer "differ. total" (differential totalizer) displays the difference between forward and reverse flow

Submenu totalizer

Press ENTER and the following will appear.

Totalizer reset

The Forward and Reverse totalizers can be reset to zero individually. Toggle through the menu until the Totalizer> F reset message appears in the display. Forward or reverse flow will be indi-

000276

cated by "> F" and "< R". Press the Enter keys, and the appropriate counter will be reset to zero. Press the step key and the following will appear.

Overflow

When the totalizer reaches its maximum count (9,999,999,) it "rolls over" and starts to count again at zero. When this occurs, the direction indicator (> F or < R) at the left of the register and the units (i.e., gal) at the right of the register will blink, and an overflow register will record the overflow. The cumulative total can be determined by multiplying the number in the overflow register times 9,999,999 and adding the value in the totals register. The overflow message is removed by toggling through the menu using the "Data" or "Step" pushbutton. At this time, pressing the Enter keys will reset the totalizer, clear the overflow register, and the blinking will stop. Press the step key and the following will appear.

Totalizer funct standard/differ. total

Press the Enter keys and the cursor will appear to the right of "standard". Press Data or Step and the indication will toggle between "standard" and "differ. total".

"Differ. total" subtracts reverse flow from forward flow. Indication shows net direction and value. Press the step key and the following will appear.

Multiplex displ. off/on

The totalizer value on the bottom line of the display shows the total for the operating flow direction. It can be made to show totals for the opposite direction either manually or automatically if the unit has been set up for bidirectional flow. If not then this feature will be locked out. Totals for the opposite flow direction can be displayed manually by pressing the Data or Step buttons. The total will be momentarily switched to show the totalized flow for the opposite flow direction. After about twenty seconds, the flow totalizer will revert to show the total for the current flow direction.

The Multiplex feature automatically switches the totalizer values so that they are alternately displayed for each flow direction. A total for one direction will be displayed for about 20 seconds and then the other for about 20 seconds. This will continue for as long as the MULTIPLEX feature is turned on. It is an "ON" - "OFF" function that is selected by the Data/Step keys and entered with the Enter keys.

3.3.19 Flow Indication

This feature makes it possible to reverse the forward and reverse flow signals. If the flowmeter is installed so that flow through the meter is in the opposite direction to which it is wired and calibrated, the flow indication will be reversed. Forward flow will read as reverse flow and vice versa. This can be corrected by reversing the wires on terminals 1 and 2 of either the flowmeter or the signal converter. This change can be made through the firmware by selecting the flow indication feature.

```
Flow indication
standard/opposite
```

Press the Enter keys and the cursor will appear to the right of "standard". Press the data or step key and the indication will toggle between standard and opposite. Select opposite, press Enter and the flowrate and totalizer indications will display in the forward direction even though the flowmeter has been installed so that the actual flow enters from the reverse direction. The purpose of this parameter is to compensate for the incorrect installation of the meter. Note that the flow arrow on the meter points in the opposite direction of actual flow.

3.3.20 Firmware Level

The firmware level and the converter model number are shown in the display with the model number and firmware release date on the top line and the EPROM identification and firmware level on the bottom line. Changes to the firmware can only be made by replacing the EPROM. This procedure has been prepared for use with firmware version D.10. Other versions may be similar but not identical and may have features different from those discussed in this section.

```
50XM1000        06/93
D699B103U01     D.10
```

When HART Protocol is required, firmware version D699B104U01 A.11 is supplied.

3.3.21 Code Number

The code number is used to gain access to internal checks and adjustments that are not normally performed by operating personnel. These are reserved for factory and maintenance personnel. Instructions for these procedures are contained in Section 5.0. The code number display appears as shown below.

```
Code number
```

000278

4.0 FUNCTIONAL DESCRIPTION

4.1 Basic Functions

The signal converter is of the pulsed dc type, i.e., it supplies a pulsed constant current dc signal to the magnet coils of the flowmeter to establish the magnetic field. Also it receives the electrode flow signal from the flowmeter, and converts it into analog and digital output signals. Zero is factory set, and no field zero adjustments are required.

Two field selectable coil operating frequencies are incorporated in this design. They are 7.5 Hz and 15 Hz for 60 Hz power and 6.25 and 12.5 Hz for 50 Hz power. The standard coil drive frequency is 7.5 Hz. The 15 Hz, when used with the digital filter feature, is only recommended for applications in which the process generates noise signals that interfere with the flow signal.

4.2 Design Features

4.2.1 Micro-Processor Controlled

The converter is micro-processor controlled with nonvolatile memory. All operating parameters are configurable via three pushbuttons on the converter or via an optional data link. During configuration, the converter remains on line, and data is updated continually. The data base is updated at the time the ENTER buttons are pressed to enter a parameter change.

4.2.2 Display

The liquid crystal display (LCD) is back lit and contains two lines of 16 alphameric (5 X 7 dot matrix) characters. The display is used to show flow rate on the top line in either percent of flow or in direct engineering units and totalization in direct engineering units on the bottom line (see Figure 3-3). In addition, the display is used to show configuring data or error messages in English language (or the selected language). Both the rate indicator and the seven digit totalizer are included in every converter as standard.

4.2.3 Rangeability

Any flow rate from 0 to 100% can be measured provided the full scale value is between 33.33 ft/s (10 m/s) and 0.66 ft/s (0.2 m/s).

4.2.4 Bi-Directional Flow

The converter can be either unidirectional or bidirectional. Selection of the directional mode is made through firmware. The standard mode is unidirectional. This can easily be changed at the factory or in the field. Instructions for this firmware change are contained in Section 5.0. In the bidirectional mode, the converter will automatically display rate and totalization in forward and reverse directions. A pulse output option for each direction is available for retransmission to an external totalizer. A flow direction contact is included in the converter to indicate flow direction for the one analog output.

4.2.5 Flow Direction

The flow direction is indicated at the left side of the display as "F" for forward flow and "R" for reverse flow. Totalization is also shown in this manner. The totalizer can be switched manually from forward to reverse or vice versa by pressing the "Data" or "Step" key located just below the display. The totalizer can also be switched automatically every 20 seconds by selecting MULTI-PLEX DISPLAY from the configuring menu.

A separate external totalizer for each flow direction can be driven by the 24 V dc scaled pulse if the scaled pulse option has been selected.

There is one analog output available. Flow in the reverse direction is indicated by the same analog signal as the forward. To make the distinction between forward and reverse flow, contact closures are provided in the converter. In a two pen recorder, for example, one pen could be used to record flow while the second pen could rest at zero with the contact open and could be elevated to some positive value when the contact closes. Therefore, the position of the second pen would indicate the direction of flow. If the analog signal goes to a computer or other intelligent instrument the contact closure condition is easily recognized as an indication of flow direction. Also (alternatively) the zero center analog outputs may be selected.

4.2.6 Output Signals

4.2.6.1 Analog Output

A 4-20 mA dc output signal into 0-750 ohms is standard and is always available regardless of which output options are selected.

4.2.6.2 Incremental Pulse

This is a 5 volt, 0-10 kHz unscaled frequency which is normally used during calibration. It can be adapted for use as an output in special applications. This output is also provided regardless of output options.

4.2.6.3 Optional Outputs

Either a scaled pulse output or a data link can be selected.

4.2.6.4 Scaled Pulse

This is a 24 V dc pulse that operates a load of 150 ohms or more. It can be used to drive an electromechanical counter at 0-10 Hz with a 50 millisecond pulse width or a high speed electronic device at 0-4 kHz with a 50 microsecond pulse width. The pulse width can be adjusted as a part of the data base and does not require a hardware change.

4.2.7 Data Link

The data link is the hardware and firmware by which the data base may be examined. The data base is a collection of elements in the converter memory which may be either altered or examined through firmware. In addition, the data base represents the information the instrument is working with in the course of its normal computations. A few of the parameters included in the data base are calibration factor, range setting, damping value and pulse width. The data link consists of two transmitting and two receiving wires which pass serial data at 110 bits per second up to 28,800 bits per second (110 Baud to 28.8 kBaud). It does not carry the analog output signal from the Converter. The analog signal is carried over its own wires directly to the receiving device (recorder, controller, indicator, computer, etc.) in the normal manner. There are two industry standard hardware arrangements for the data link option. They are RS232C and RS485.

The RS232C interface is probably the most common serial data link in use today. It permits communication between two devices normally within 50 feet (15 m) of each other at baud rates up to about 9600. Devices are available to convert from RS232C to RS485 to allow connection of more than one converter to a single computer and to transmit well beyond 50 feet.The RS485 interface is a high speed link used by F&P's MICRO-DCI instrument line as well as other intelligent instruments. It permits any transmitter to be shut off or 'tri-stated' when not in use. For F&P instruments such as the SUPERVISOR™, it means that up to 32 instruments may 'talk' over one data link. This link can send data at 28.8 kBaud over lines up to 4000 feet (1200 m). Two key pad selectable communication modes are available. They are MICRO-DCI Binary and ASCII.

4.2.7.1 ASCII

In the ASCII mode, a sequence of ASCII characters is sent back and forth.

4.2.7.2 MICRO-DCI Binary

This mode is the most powerful communications scheme available. It will be recognized by the following instruments:

1) SUPERVISOR and SUPERVISOR-PC (53SU1000 & 53SU5000).
2) IBM® PC with F&P firmware (53HC3300)
3) DCI system using I-COM/X and Supervisor
4) DCI SYSTEM SIX using C10 MICRO- DCI Datalink Interface

In the binary mode, information is compressed so that it is sent approximately twice as fast as in the ASCII mode. However, this format will not be recognized by "dumb" terminals. The binary mode interface provided by F&P permits the user to write programs which automatically extract or change data. In each of the above cases, these programs are written in a different notation, with the IBM PC version using BASIC with customized subroutine calls. Detailed instructions on programming for the data link are contained in Section 6.0.

4.2.8 HART Interface

The optional HART protocol system, when supplied, permits simultaneous 4-20 mA and digital signal transmission on the same 2-wire cable. With this protocol, process parameters such as instantaneous flow rate and cumulative total flow, or operating conditions such as alarm values,can be monitored or altered by an external "smart" device, a host computer for example. This interface allows the 50XM1000 data base to be uploaded into the host computer. Therefore, operating parameters which would only be changeable at the converter can be scanned and remotely reconfigured.

When implementing the HART protocol, the control computer is the master and the field transmitter the slave. In addition to this primary master a second master (such as the Series 50HC1000 Hand-Held Computer) can become active. Data is transmitted at 1200 baud, with the serial information being encoded and detected as outlined in the Bell 202 standard. A description of HART protocol is provided in Section 6.0.

HART firmware is not available with all the features and submenus discussed in this instruction bulletin.

4.2.9 Power

Refer to the converter data tag for power requirements.

5.0 CALIBRATION

5.1 General Discussion

NOTE
The signal converter should never require recalibration, unless a hardware failure has occurred. If the non-volatile memory data proves defective, calibration data must be reentered. In the event of component failure, existing calibration data may no longer be valid.

One notable feature of the converter is that it can be configured independent of any particular flowmeter, as long as the flowmeters are of the same size and use the constant meter factor/size design concept. The design of the microprocessor-based converter permits configuration and calibration of the converter prior to its installation.

Each converter is configured and precisely calibrated at the factory in accordance with customer specified flow parameters.

Since the flow metering system is precalibrated, it is generally ready for on-line service as received. In the event that the specified system flow parameters or engineering units are to be changed, the converter must be reconfigured to agree with the revised flow values.

Signal converter performance can be verified periodically using the procedure described in Section 5.3. If problems are experienced which may be originating with the signal processor, use the performance verification procedure first. Recalibration should be done only when it has been determined that it is actually required. If calibration is necessary, it can be done using the procedure described in Section 5.6.

Performance verification and calibration of the converter require the use of the F&P Model D55XC2000 Signal Simulator. The signal simulator is supplied with an interface adaptor which includes test cables that mate with receptacles provided on the converter assembly.

Essential calibration data is recorded and listed on a data tag that is attached to the side of the transformer in the signal converter assembly. The calibration data provided can be used to restore the signal converter to a calibrated condition when data held in the non-volatile memory data has been corrupted. (RAM corruption can result from a lightning strike or severe electrical disturbance near the installation site.) In this event, all of the calibration data can be re-entered manually. However, if the signal converter has malfunctioned and a defective component must be replaced, the calibration data is no longer valid; the unit must then be recalibrated as described in this section.

5.2 Test Equipment Requirements

5.2.1 Equipment

Test equipment needed for signal converter calibration includes the following:

1) F&P Series D55XC2000 Signal Simulator

2) Electronic Totalizer/Frequency Counter (0-10 kHz)

3) Digital Voltmeter (typically, 0-10 V dc)

4) Electromechanical Counter or Electronic Totalizer (as applicable for 0-15 Hz* max, or 0-4 kHz)

5) 250 ohm ±0.05%, 1/2 W, precision resistor

*assumed maximum count rate of electromechanical counter

Typical test wiring is shown in Figure 5-1. Interconnection wiring diagrams for the converter are included in the Section 2.0 and should be used to supplement this discussion.

Use of an F&P Model 53SU1000 SUPERVISOR, 53SU5000 SUPERVISOR-PC, or similar intelligent data handling equipment will be needed for interfacing with the RS 232C or RS 485 I/O signals, when supplied. Signal wiring is shown on the applicable system interconnecting diagram. When communication is implemented via the HART Protocol, applicable interconnection diagrams are contained in the technical literature provided for the particular communicator; e.g., the Hand-Held Computer (IB 50HC1000).

5.2.2 D55XC2000 Signal Simulator

The D55XC2000 Signal Simulator provides an adjustable process variable flow signal suitable for on-site performance and accuracy tests of the converter.

The signal simulator is supplied with an interface adaptor which includes test cables that mate with receptacles provided on the signal converter assembly.

Typically, when these test cables are connected, power for operation of the converter is supplied by the signal simulator.

Attachment of the test cables from the signal simulator to the signal converter is illustrated in Figure 5-1. The verification procedure is described in Section 5.3.

The simulator signal range can be preset via 3 decade type (0-9) digital switches. These preset switches permit precise setting of the simulated flow signal over a range of 0.00 to 9.99 m/s in 0.01 m/s increments.

The converter power supply should correspond to simulator power supply. The ac line plug (mains plug) should be connected so that the "Phase" lamp is energized. If supply is dc, observe polarity as shown in Figure 5-1.

CAUTION
Applying 120 V ac power to a converter assembly that is supplied for 24 V dc operation will result in destruction of the signal converter.

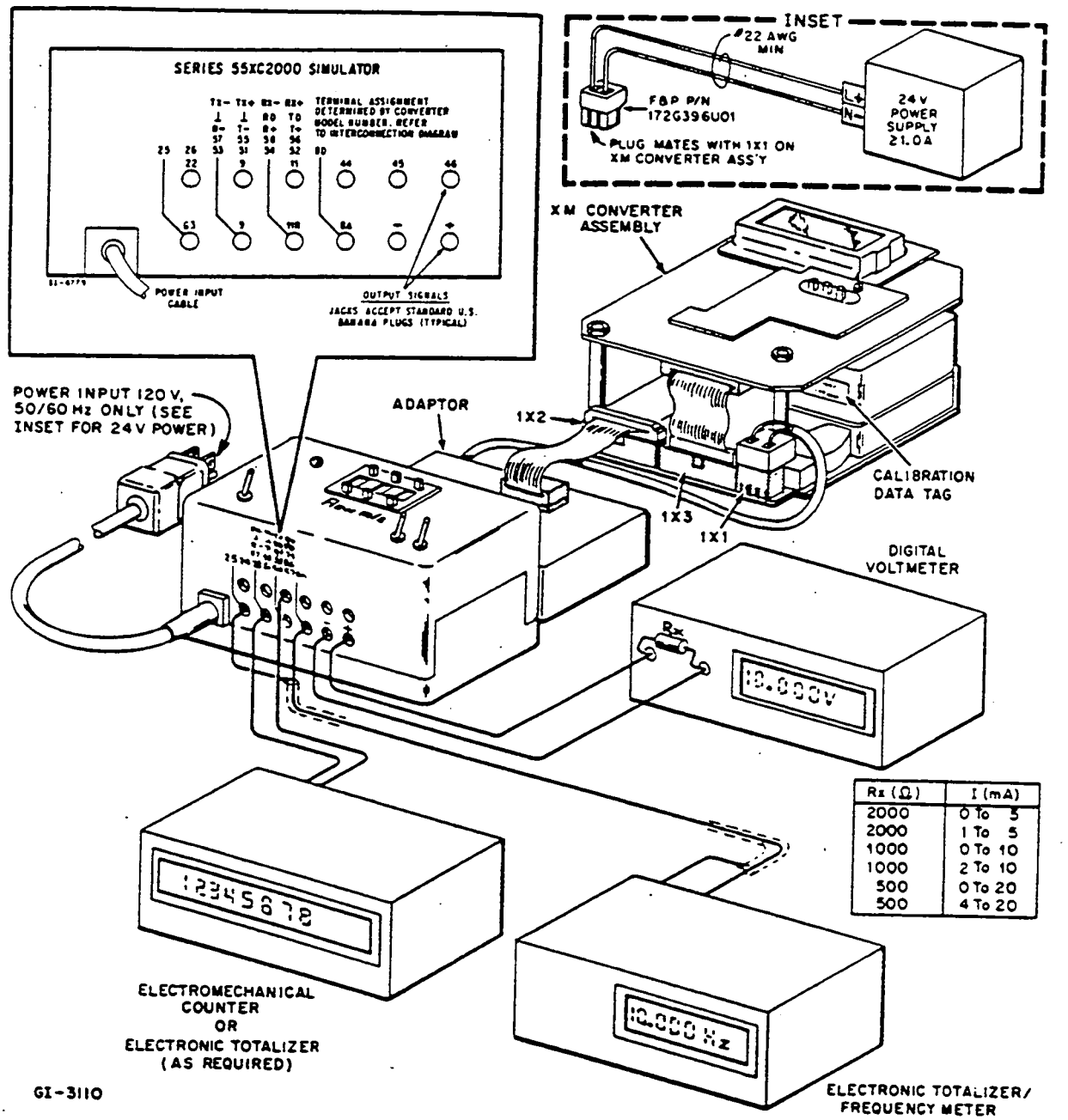

Rx (Ω)	I (mA)
2000	0 To 5
2000	1 To 5
1000	0 To 10
1000	2 To 10
500	0 To 20
500	4 To 20

FIGURE 5-1. TEST WIRING FOR 50XM1000

5.3 Performance Verification

To verify calibration of the converter, connect the simulator as shown in Figure 5-1.

CAUTION
When the dynamic test is to be made in the customer's instrument service shop, especially if the total volume processed is needed for inventory or billing purposes, the total volume should be logged before disrupting electrical interconnections.

Enter a range value on the 3-digit range selector and read the output on the converter assembly liquid crystal display or metering devices connected to the simulator output(s).

For ... Qmax DN velocity = 33.33 ft/s

The indicator reading can be calculated as follows:

$$\% \text{ Indicator Display} = \frac{m/s}{10.159} \times \frac{\text{Range DN}}{\text{Range}} \times 100$$

where, m/s = Simulator velocity setting
Range DN = meter Cal factor (automatically corrected by the computer for either 33.33 ft/s or 10.0 m/s)

Alternatively, if the converter is set up for max flow velocity (QmaxDN) = 10 m/s, then the % Indicator Display calculation would be as follows:

$$\% \text{ Indicator Display} = \frac{m/s}{10.00} \times \frac{\text{Range DN}}{\text{Range}} \times 100$$

For example, assume the flowmeter is a 2 inch size meter with a Cal Factor of 268.372 gpm at 33.33 ft/s, that the signal simulator is set for 5.00 m/s, and Range is preset for 250 gpm max, then:

$$\% = \frac{5.00}{10.159} \times \frac{268.372}{250} \times 100$$

$$= 52.8$$

000285

If the current output is preset for 0-20 mA and the load resistor (Rx) is 250 ohm (refer to Figure 5-1 Test Wiring), then the voltage reading displayed by the DVM should be:

$$E = \left(Imax \times \frac{indicator\,\%}{100} \right) (Rx)$$

$$E = \left(0.020 \times \frac{52.8}{100.0} \right) (250)$$

$$E = 2.64\ V\,dc$$

The flow velocity in ft/s at the operating flow rate can be calculated as shown below.

$$\text{ft/s} = \frac{\text{OPER(gpm)} \times 33.33}{\text{CALFACTOR(gpm)}}$$

Using values given in the above example,

$$\text{ft/s} = \frac{250 \times 33.33}{268.372} = 31.0$$

To convert velocity in ft/s to m/s,

$$\text{m/s} = \frac{\text{ft/s}}{3.2808}$$

typically,

$$\text{m/s} = \frac{31.0}{3.2808} = 9.45$$

When satisfactory performance has been demonstrated, select the desired current output span (0-20, 2-10, 0-10, 0-5, 0-10-20 or 4-12-20 mA) before returning the converter to service. Standard output is 4-20 mA.

5.4 Menu Sequence

The following list represents the display menu sequence when running firmware version D.10 and using the Step button to move through the menu items. The first message displayed the first time the C/CE button is pressed after the converter is powered up is "Prog. Protection ON". Thereafter, pressing the C/CE button while the converter is in monitoring mode will display the parameter on display when configuration or calibration mode was last exited. There is wraparound between the last and the first items on the menu.

The menu items beginning the list are configuration mode functions. Calibration mode items are those items on the list following "code number". These items are preceded with " * " on the list; these calibration mode functions are inhibited unless "code" is selected. Submenu lists (preceded with a "+") only appear if the associated upper level is selected.

Where an item has two simple choices, the second selection is shown following a "//".

```
Prog. protection
off  //on

Language
English

Meter size   (available only for fixed range per size)
25 mm  1 in

Cal-fact  10m/s //33ft/s
53.6744 gpm

Range
gpm

Pulse factor
1.00000 / gal

Pulse width
30.000 ms

Low flow cut-off
1.0000 %

Damping
6.0000 s

Filter
on//off

Density
1.00000 g/cm3
```

000287

```
 System zero adj.
 0.0000 Hz

Submenu
unit
    + Range unit
          gpm
    + Totalizer unit
          gal
    + Flow
          gpm
    + Unit factor
       3785.40 Liter
    + Unit name
       kgal/min
    + Prog unit
          with/without density

Submenu
alarm
    + Max alarm
    + Min alarm
    + Error log
    + Function V8, V9
          max. alarm
          min. alarm
          max/min alarm
          general alarm
          empty pipe
          no function
           F/R-signal
Submenu
Current output
    + Current output
      4 - 20 mA
    + Iout at alarm
      0 % //130 %

Submenu
Data link
    + Communication
      uDCI binary //ASCII
    + Instr. address
      000
    + Baudrate
      1200 bd
```

000288

```
Submenu
Self check
    + Self check
      Iout
    + Self check
      NVRAM 22C12
    + Self check
      EPROM 27C512
    + Self check
      EEPROM 93C46
    + Self check
      Alarm contact
    + Self check
      V8, V9 contact
    + Self check
      Switch S206
    + Self check
      Data link
    + Self check
      Fout
    + Self check
      Display
    + Self check
      Zero return
    + Self check
      Totalizer reset
Submenu
Detector e.pipe
    + Detector e.pipe
      on //off
    + Threshold
      070
    + Adjust
      Detector e.pipe
```

000289

Submenu
Totalizer

+ Totalizer >F
reset

+ Overflow >F
000

+ Totalizer <R
reset

+ Overflow <R
000

+ Totalizer function
standard//differ. total

+ Multiplex displ.
off //on

Flow indication
standard//opposite

D50XM1000 06/93
D699B103U01 D.10

000290

Code number
####

* Operating mode
  standard//fast

* Option
  no//detector e. pipe

* QmaxDN velocity
  10 m/s //33.33 ft/s

* Span adjust >F
  56.599 %
* Span adjust <R
  -56.599 %

* Zero adjust
  0%

* Adjust Iout 100%
  100

* Adjust Iout 20%
  20

* Qmax > = .02 Qmax DN
  on//off

* Range DN
  fixed //programmable

* Calibration
  0%

* Flow direction
  forward/reverse //forward

* Excitation Read Only. Not firmware selectable.
  7-1/2 Hz

* Instrument no.
  0

* ** RESET **

* output data

* Initialization

000291

5.5 Engineering Units

Available flow units are listed below. Entries for volumetric units followed by a "/" may use any of the units of time following the "/". Entries preceded with a "^" permit use of a density entry other than 1.000.

```
  l/s /min /h
  hl/s /min /h
  m³/s /min /h
  igp/s /m /h
  gp/m /h
  mgd
  bbl/s /min /h
  bls/day /min /h
^ kg/s /min /h
^ t/s /min /h      where ton = 1000 kgm (not U.S. ton)
^ gram/s /m /h
  ml/s /min /h
  Mlt/min /h /day   megaliters = million liters
^ lbs/s /min /h
^ uton/min /h /day   U.S.ton = 2000 pounds
  k/gal/s /m /h  thousands of US gallons
```

The following are totalization units available:

```
  l
  hl
  m³
  igal
  gal
  mgal
  bbl
  bls
^ kg
^ t
^ gram
  ml
  Mlt
^ lbs
^ uton
  kgal
```

> **NOTE**
> Engineering units may be selected via the display menu or from a remote terminal connected to the 50XM data link. In the latter case, selection is made by use of a 3-digit code number as defined in Section 6.0 (refer to Data Base, data points B11 and B22).

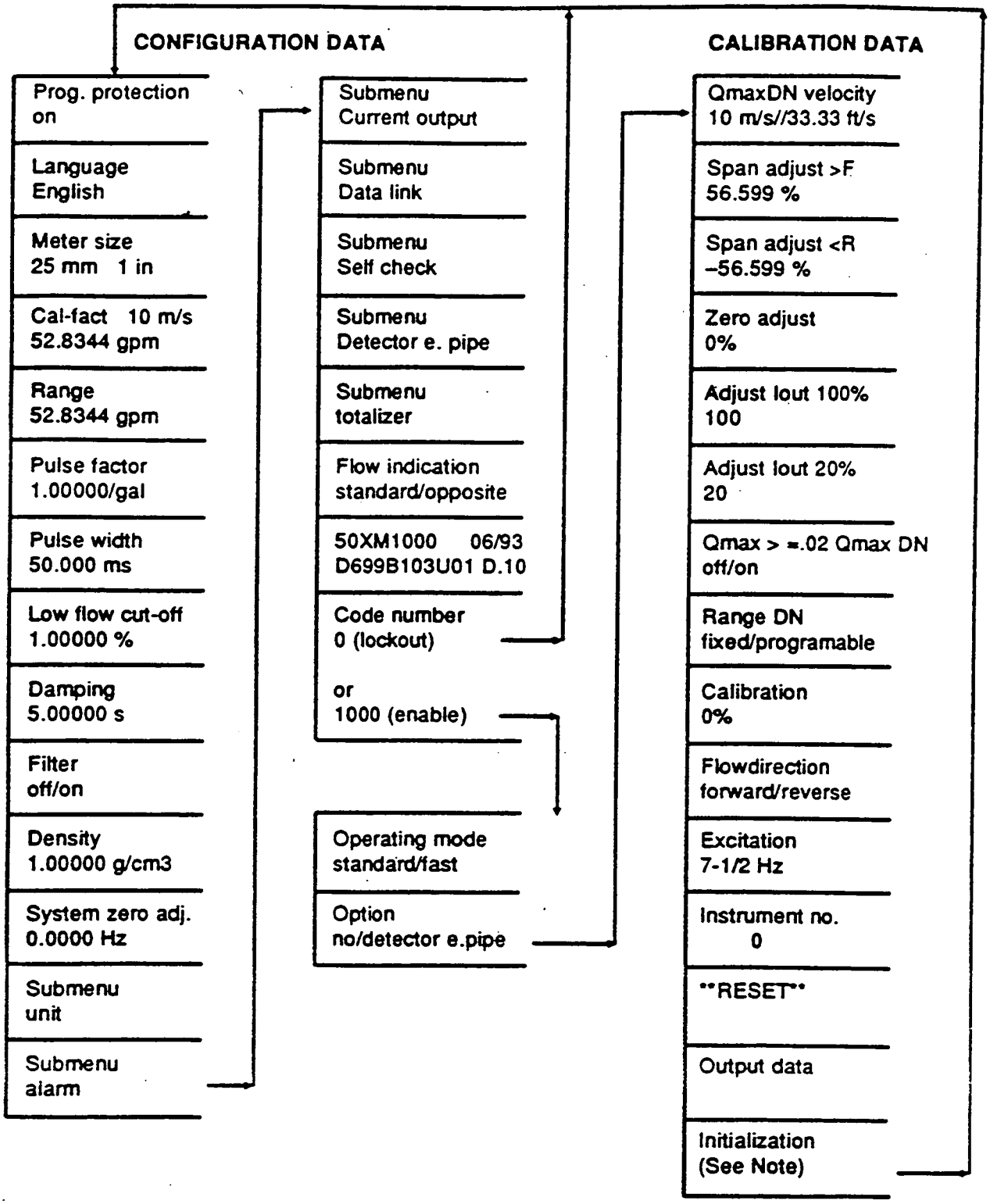

Note: Preset values or conditions noted in the above flowchart are "default" values preset into the database upon selection of the Initialization subroutine.

FIGURE 5-2. CONFIGURATION AND CALIBRATION FLOWCHART

5.6 Calibration Procedure

NOTE
The 50XM Signal Converter should not require recalibration in its lifetime, unless a hardware failure has occurred. If the non-volatile memory data proves defective, calibration data must be reentered. In the event of component failure, existing calibration data may no longer be valid.

The converter firmware includes some configuring routines whose use permits special entries specific to the calibration of the device to be set. When the calibration mode has been invoked, it is possible to access parameters normally blocked because they are either linked to options not installed or because they are not compatible with other parametric settings.

For example, the firmware includes an automatic module identification for the RS485 and RS232 serial interface modules. When configuring the converter, the parameters "Instr. address", "Baudrate" and "Communication" in the "Data link" submenu are programmable only if a serial interface module has been installed. The absence of such a module is indicated by "ERROR-NOT AVAILABLE" on the display whenever an attempt is made to call up that parameter. However, in the calibration mode, any of these menu items may be accessed and changed if the proper module has been installed.

NOTE
This procedure has been prepared for use with firmware version D.10 of the F&P type 50XM Signal Converter. Other versions will be similar but not necessarily identical, and may have features different from those discussed in this section.

CAUTION
Only experienced electronic technicians should attempt to calibrate the signal converter. Erroneous calibration will result in unsatisfactory performance.

CAUTION
Some of the surface mounted IC devices used in the signal converter are static sensitive and may be damaged by improper handling. When adjusting or servicing the signal converter, use of a grounded wrist strap is recommended to preclude inadvertent damage to the integral solid state circuitry.

5.6.1 Code Number

Access to special functions including calibration parameters is achieved by entering the proper code number. In order to enter the factory calibration mode it is necessary to enter the number 1000. The calibration mode is locked out with the entry of a number other than 1000 or after a power-on reset. Program protection must be "OFF" in order to make this entry.

```
Enter code number 1000
```

5.6.2 Operating Mode

Consult F&P for assistance before setting "fast".

```
Operating Mode
Standard//fast
```

5.6.3 Option

Turns empty pipe on or off and permits access to submenu.

```
Option
no//detect e. pipe
```

5.6.4 Maximum Velocity

Velocity at Cal Factor

```
QmaxDN velocity     33.33 ft/s
```

This parameter is used to select either 10 m/s or 33.33 ft/s as the velocity corresponding to Cal factor. Span calibration adjustments of both frequency and current outputs are to be made with this parameter selected to 10 m/s and the Span Adjust display set to indicate flow in "%".

5.6.4.1 Span Adjust-Forward Flow

Span Adjust forward flow (shown below as not adjusted).

NOTE
The converter range should be changed to correspond with the "Cal Factor" value for any of the remaining steps.

```
span adjust > F
56.250%
```

This parameter determines the calibration of both the display and the 10 kHz unscaled pulse output and may be set by two different methods. First, a value may be entered manually when the following menu appears following the "Enter" operation:

000295

```
Span adjust > F
 manual    ?
```

The proper value is that which will cause the display readout to indicate 99.90% with an input of 9.99 m/s. This number is present on the converter data tag affixed to the power transformer on the converter assembly and will be valid unless there has been replacement of analog circuit hardware.

In order to automatically adjust the span, a flow simulator type 55XC2000 must be available. Applicable test wiring is shown in Figure 5-1. The simulator must be set to 9.99 m/s and switched to the forward flow mode. After scrolling to the "automatic" menu item and pressing "Enter", the adjustment progresses and the display will show:

```
>F>F>F>F>F
 >F>F>F>F>F
```

After a few seconds the adjustment is completed and the converter reverts to monitoring mode; the display reading will be 99.9% (+/- 0.1%). Push the C/CE button to display the value computed such as:

```
Span adjust >F
 56.255 %
```

After approximately 20 seconds the converter will return to monitoring mode.

5.6.4.2 Span Adjust - Reverse Flow

```
Span adjust <R
 -56.273
```

This adjustment is performed in the same manner as that for the forward direction except that in the automatic mode the simulator is to be set at 9.99 m/s "Reverse". Refer to span adjust -forward flow (5.7.2.1) for instructions.

5.6.5 Zero Adjust

```
Zero adjust
 .025%
```

In order to manually set zero, enter a simulator input of "0.10" m/s FWD, and note the reading obtained. Then enter an input of "0.10" m/s REV, and note the reading obtained. Enter a value into the "Code 1000" Zero adjust menu which ultimately causes these readings to be equal (typically in the range of ±.03%)

Example:

Enter an input of 0.10 m/s FWD = Output.98% of 10 m/s span
Enter an input of 0.10 m/s REV = Output -1.04% of 10 m/s span
Enter an input of -.03% as a manual zero.
Outputs will then be +/- 1.01% respectively.

5.6.6 Adjust I_{out}

5.6.6.1 Adjust I_{out} at 100 %

Adjust I_{out} Value at 100% of range setting

```
Adjust Iout 100%
 100.0
```

Set the I_{out} to 0-20 mA, except for HART PROTOCOL where I_{out} is set for 4-20mA. Attach a DVM across the 250 ohm resistor. Read the DVM, convert to percent of a 99.9% output and enter this value. For HART applications, the use of a 50HC1000 Hand-Held Computer is recommended.

Example: When the above menu was selected, the value measured across the 250 ohm resistor was 5.056 volts. This value divided by the nominal value of 4.995 volts (19.98 mA x 250) yields the corrected value that must be entered, which is 101.22. In equation form, this becomes:

$$\frac{\text{Measured Value x 100 (\%)}}{\text{Nominal Value}} = \text{corrected value (\%)}$$

5.6.6.2 Adjust Iout at 20 %

Adjust I_{out} value for 20% of range setting (for HART PROTOCOL refer to 5.6.6.3).

```
Adjust Iout 20%
 20.000
```

Follow the procedure outlined in paragraph 5.6.4.1, but with an input signal of 2.00 meters/second and with a nominal value of 1.00 volts.

$$\frac{\text{Measured Value x 20 (\%)}}{\text{Nominal Value}} = \text{corrected value (\%)}$$

Enter the corrected value on the second line of the display and press ENTER.

5.6.6.3 Adjust Iout at 20 % with HART PROTOCOL

Adjust Iout value for 20 % of range setting with HART PROTOCOL.

```
Adjust Iout 20%
 20.000
```

Set the simulator to 0.00 m/s. Read the voltage across the output resistor. Determine the percentage that measured value is of nominal value as follows:

$$\frac{\text{Measured Value x 20 (\%)}}{\text{Nominal Value}} = \text{corrected value (\%)}$$

Enter the corrected value on the second line of the display and press ENTER.

NOTE
When all calibration steps are completed, record the respective data and keep it with the converter for future reference.

000297

5.6.7 Qmax > = .02 Qmax DN

Selecting "ON" permits ranges to 2% of Cal Factor.
Selecting "OFF" permits ranges to 5% of Cal Factor.

```
Qmax > = .02 max DN
on/off
```

5.6.8 Range DN

Range DN - fixed/programmable

```
Range DN
 fixed
```

The range DN can be entered either through meter size selection (fixed) or by direct entry (programmable). In the programmable mode a further choice regarding the velocity at the cal factor (33.33 ft/s) or meter capacity (10 m/s) can be made. (Refer to paragraph 5.6.4 Maximum velocity.)

If the "Fixed" mode has been chosen, Range DN is automatically configured upon selection of meter size. Attempts to configure these parameters will be ignored as long as "Fixed" mode is active.

5.6.9 Calibration

For F&P use only.

```
Calibration
0%
```

5.6.10 Flow Direction

```
Flowdirection
 forward/reverse
```

The converter offers bidirectional as well as forward only flow measurement. If the converter is in the forward mode, the parameters Range R, Pulse factor R and Multiplex Display are not available.

5.6.11 Excitation

```
Excitation
 7-1/2 Hz
```

The choice of coil excitation frequency is made using switch S101 on the analog pc board of the signal converter assembly. (See Figure 7-1 for switch position information.) This switch position is read once upon either a power-up or a reset (Refer to 5.6.13).

5.6.12 Instrument Number

```
Instrument no.
    0
```

All converters have a factory installed sequential number, reflecting their relative time of manufacture.

5.6.13 Reset

```
• •  RESET • •
```

This function executes a " warm" CPU hardware reset, after which switch positions, hardware options, etc. are polled. This function is normally completed whenever power is applied to the converter. The power line interrupt counter is not incremented and the code number is not cleared when "RESET" is invoked.

5.6.14 Output Data

This function outputs all the converter's configured data in plain ASCII text to both the converter display and the data link simultaneously. This can be useful in establishing data link protocol or saving all device parameters.

5.6.15 Initialization

The last item in the calibration menu sequence is "Initialization". If this item is selected all parameters are set to the default values, replacing the factory-installed settings. Therefore, extreme caution should be exercised in using "Initialization". In general, "Initialization" need only be performed if there has been a loss of data in non-volatile memory. If a record of the calibration data is available from the tag, the data should be re-entered following the initialization. Otherwise, the unit must be calibrated again to place it back to within specified accuracy.

000299

6.0 Data Link Communications

6.1 General Discussion

A digital data link, either RS232-C or RS485/422, can be supplied as an optional feature in the 50XM1000 Signal Converter (see Model Number Breakdown, Output Options). Each of the above options requires the addition of a different hardware module to the converter. The choice of RS232-C communications provides a serial data link between two instruments, e.g., a video display terminal such as a VT100 (or host computer) and the signal converter. RS485 is useful for multi-instrument bus communications and is capable of being expanded to establish a link with up to 32 nodes.

It is common practice to have intelligent instruments (micro-computers) communicate through a network to a centralized control point. This permits plantwide monitoring and supervisory applications by a single operator. The host device may use ASCII, MICRO-DCI Binary or HART PROTOCOLS.

When the signal converter is placed in the ASCII communications mode an ASCII terminal, or a computer with the appropriate firmware to emulate an ASCII terminal, can be connected to the data link port. The terminal can then be used to monitor or modify the data base parameters of the converter or other intelligent instruments connected to the data link.

Placing the signal converter in binary communications mode permits high speed communications with the following:

a) a host computer such as IBM PC XT™ or AT™ with F&P firmware (53HC3300),
b) the F&P MICRO-DCI SUPERVISOR (53SU1000) or SUPERVISOR-PC (53SU5000), or
c) DCI SYSTEM using I-COM/X and SUPERVISOR.
d) DCI SYSTEM SIX using C10 MICRO- DCI Datalink Interface

The RS232C interface permits one to one communication between two devices separated by no more than 50 feet (15 m) at baud rates not exceeding 9600.

The RS422A/RS485 interface is a high speed link used by F&P's MICRO-DCI line and other intelligent instruments. The newer RS485 version, used in the 50XM, permits any transmitter to be shut off or "tri-stated" when not in use. For F&P instruments, this means that up to 32 instruments may "talk" over one data link. This link can send data at 28.8 k baud over lines up to 4000 feet (1200 m).

It is also possible to communicate with the PC through use of a modem and telephone line (typical data link interfaces are illustrated in Figure 6-1). A SCADA Adaptor is required for modem applications. In this arrangement, the number of instruments that may be examined is practically limitless. It should be noted that hardware adapters are available to convert from one type of hardware link to another. In particular, to use a PC with multiple instruments, it might be necessary to purchase one RS232 to RS422/485 converter for use at the PC.

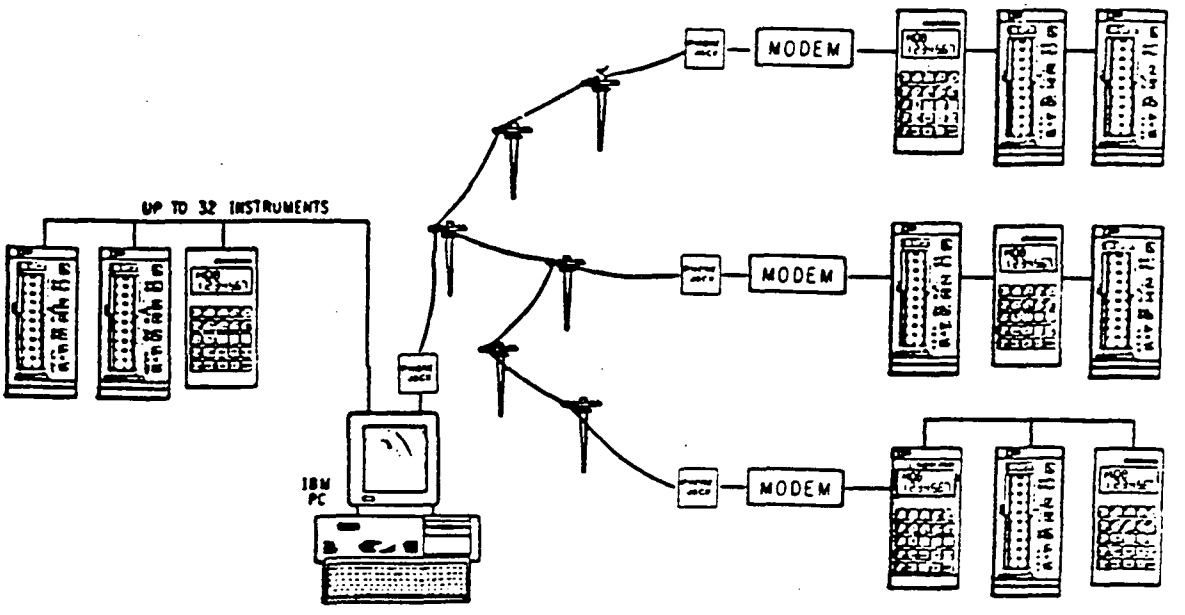

FIGURE 6-1. MICRO-DCI WIDE AREA NETWORK

Binary protocol is commonly used with the F&P MICRO-DCI instrument line. Details regarding ASCII and MICRO-DCI Binary communications follow. The desired operating mode is selected by entering the Data Link sub menu and then designating either ASCII or Binary communications mode, the 2-digit instrument address and baud rate.

The 50XM1000 is one of a series of "smart" flowmeter signal converters which can transmit data over a serial link. The terms "data base" and "data link" are significant to this discussion and are defined as follows:

Data Base - a collection of elements in the computer's memory which may be either altered or examined through firmware. The data base represents the information the computer is working with during the course of its normal computations.

Data Link - the hardware and firmware means by which the data base may be examined. The RS232-C interface permits one-to-one communication between two devices separated by no more than 50 feet (15 m) at baud rates up to 9600 (see Figure 6-2). The RS485 interface permits the transmitter to be shut off or "tri-stated" when not in use. This allows up to 32 instruments to "talk" over one high-speed data link. This link can send data at up to 28,800 baud over lines up to 4000 feet (1200 m). Other selections are for use with optional document printers (consult F&P).

000301

6.1.1 Hardware Implementation

The signal converter may be equipped with one of two different modular PC assemblies for communications, which are:

a) RS232-C (IEC type V24)

b) RS485/422

The RS232-C interface is commonly used in a serial loop (one-to-one). Communications interface RS485 has the capability to serve a larger number of bus-linked users in a multi-drop application.

6.1.1.1 RS232-C Interface (IEC type V24)

RS232-C Engineering Specifications

Electrical transmission mode:	common mode
Number of transmitters:	1
Number of receivers:	1
Cable length maximum:	50 feet (15 m)
Communications rate, maximum:	20 kBaud*
Signal voltage, no load:	±15 volts
Signal voltage under load condition:	±5 volts

RS232-C Installation

I/O TERMINAL ID:

TXD	Transmit Data
RXD	Receive Data
-	Ground

* limited to 9600 baud with 50 feet (15 m) of cable (see Figure 6-2)

6.1.1.2 RS485 Interface

RS485 Engineering Specifications

Electrical transmission mode:	balanced mode
Number of transmitters:	32
Number of receivers:	32
Cable length maximum:	4000 feet (1200 m) (see the following note)

000302

Communications rate, maximum:	10 MBaud
Signal voltage, no load:	5 Volts
Signal voltage under load condition:	1.5 Volts

RS485 Installation

I/O TERMINAL ID:

T+ Transmit Data +

T- Transmit Data -

R+ Receive Data +

R- Receive Data -

> NOTE
> Refer to applicable system interconnection diagram for signal wiring. Cable length is a function of transmission speed.

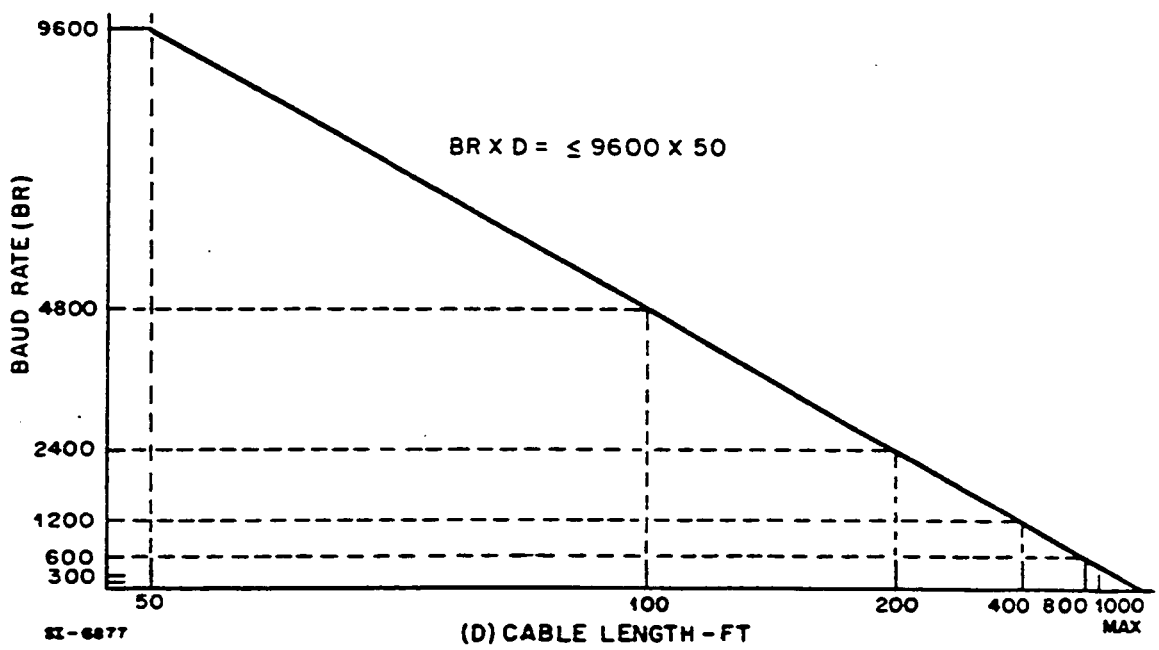

FIGURE 6-2. BAUD RATE VS. CABLE LENGTH FOR RS 232

000203

6.2 ASCII Communications Mode

6.2.1 ASCII Communications Protocol

Communications is always started from the host computer. The signal converter responds only to host inquiries. Any terminal device such as a VT100 or a PC with serial port may be used in this mode but a message must be typed each time a new parameter is desired. Signal converter data may be requested by the host in monitor mode, while data modification by the host is reserved for configuration mode.

Communication via the data link always starts with a 'Start of Header' character (SOH = 01H = <CTRL> A), followed by a 'M' for monitor mode or 'P' for configuration (programming) mode, followed by the two digit instrument address. The address is succeeded by two characters for the requested function, and optionally a maximum of eight data bytes. Carriage return (CR) and line feed (LF) characters are the terminators for a message transfer. A byte is defined as 7 data bits and one stop bit (even parity). An example of signal format is provided in paragraph 6.2.2.

The signal converter response also starts with a SOH character, followed by the function characters and optionally up to eight data bytes. Completion of the message is indicated by the CR and LF characters. Message data may be furnished with a minus sign (-) and a decimal point (.) for fractional decimals. Leading or complimentary zeros need not be sent with the message.

All received data is checked by the signal converter in various ways. In addition to checking each transmitted byte for even parity, the converter monitors a message for exact conformance with the protocol conventions (function characters as well as number and type of data). Before the new data is activated, it is examined for validity. In case of nonconformity, an error message is sent back to the host (function character 'X' followed by a two digit error code number). If the data passes the check, it is activated by the 50XM1000 and an acknowledge message of the exact same format as the received message is returned to the host computer. This completes one data exchange.

6.2.2 Monitor Mode

This mode of operation enables the interrogation of all variable parameters as well as status information.

The complimenting protocols are as follows:
a) Host interrogation
Host Computer to signal converter:

```
SOH  M  A1  A0  K1  K0  CR  LF
 .   .   .   .   .   .   .   .
 .   .   .   .   .   .   .   .
 .   .   .   .   .   .   .   Line Feed = 0AH
 .   .   .   .   .   .   Carriage Return = 0DH
 .   .   .   .   two ASCII Function Characters
 .   .   two digit Address in ASCII format.
 .   Monitor Mode
Start of Header = 01H
```

NOTE
When using an IBM PC, the following control characters on the keyboard are used, either individually or in combination, to generate various message characters.

Definition	Message Character	IBM Keyboard	Hex
Start of Header	SOH	<CTRL> A	01
Carriage Return	CR	ENTER	0D
*Line Feed	LF	SHIFT + ENTER	0A
*Escape	ESC	F2	1B

*Applicable only for terminal emulator program EM220. These characters may be generated by other key(s) when using a different emulation program.

b) Response from signal converter
signal converter to Host Computer:

```
SOH  K1  K0  D7 - D0  CR  LF
 .   .       .        .   .
 .   .       .        .   .
 .   .       .        .   Line Feed = 0AH
 .   .       .        Carriage Return = 0DH
 .   .       maximum 8 ASCII data bytes
 .   two ASCII Function Characters
Start of Header = 01H
```

000305

A maximum of eight data bytes including decimal point (.) and minus sign (-) can be sent by the signal converter.

The instrument address must always be entered with two digits (00 - 31).

6.2.2.1 Function Characters with Monitor Mode

Function characters are the means of addressing the signal converter operating parameters and status data. Only capital letters are accepted as proper entry. A list of function codes that can be used in monitor mode are given in Table 6-1.

TABLE 6-1. FUNCTION CODES

Display	AN
Damping	DP
Density	DI
Flow Rate in Engr Units	DF
Multiplexed Display	DM
Empty Pipe Detector	DL
Threshold (Empty Pipe Detector)	DS
Error Register 0	ER
Error Register 1	E1
Engr Units for Maximum Flow	EI
Engr Units for Totalizer	EZ
Scaling Factor-Forward Flow	I>
Scaling Factor-Reverse Flow	I<
Current Signal Output	IO
Alarm Current Signal Output	IA
Percentage Flow Rate	M
System Zero Reference	NG
Meter Size	NW
Firmware Version	PR
Maximum Forward Flow Rate (range)	Q>
Maximum Reverse Flow Rate	Q<
Maximum Flow Rate of Meter Size	QN
Status Register	ST
Noise Suppression	SU
Low Flow Cut-off	SM
Language	SP
Totalizer Forward Flow	Z>
Totalizer Reverse Flow	Z<

6.2.2.2 AN: Display

The converter flow rate display units can be in percent or engineering units (e.g. l/min). Data presentation is one digit.

Index No.	Meaning
0	Percent display
1	Engineering units display

Example:

Flow converter with address 00 displays the flow rate in percent.

Host	SOH M 0 0 AN CR LF
Converter	SOH AN 0 CR LF

6.2.2.3 DP: Damping

The damping parameter is presented in seconds, seven data bytes.

Example:

Instrument number 12 is configured for 12.5 seconds damping.

Host	SOH M 1 2 D P CR LF	damping?
Converter	SOH D P 1 2 . 5 0 0 0 CR LF	12.5 s.

6.2.2.4 DI: Density

The density parameter is presented in g/cm^3, seven data bytes.

Example:

Instrument number 03 is configured for 0.8 g/ccm density.

Host	SOH M 0 3 D I CR LF	density?
Converter	SOH D I 0 . 8 0 0 0 0 CR LF	0.8 g/ccm.

000307

6.2.2.5 DF: Flow Rate in Engineering Units

The converter flow rate display is interrogated. Engineering units are as specified under the EI function (6.2.2.11). Data presentation is seven digits.
Example:

The flow rate of converter 00 shall be requested.

Host	SOH M 0 0 E I CR LF	engineering units?
Converter	SOH E I 0 0 1 CR LF	L/minute
Host	SOH M 0 0 D F CR LF	flow rate?
Converter	SOH D F 1 5 . 6 7 0 1 CR LF	15.6701 L/minute

6.2.2.6 DM: Multiplexed Display

Interrogation of the display mode. The presentation is single digit.

Index Number	Meaning
0	Multiplex display mode off
1	Multiplex display mode on

6.2.2.7 DL: Empty Pipe Detector

Interrogation of the empty pipe detector function state (if available). The presentation is single digit.

Index Number	Meaning
0	Empty pipe detector off
1	Empty pipe detector on

6.2.2.8 DS: Threshold Empty Pipe Detector

Interrogation of the current empty pipe detector threshold setting. The presentation is always three digits.

Example:

Instrument at address 12 is requested to report if its empty pipe detector is activated and what the threshold level is.

Host	SOH M 1 2 D L CR LF	detector status?
Converter	SOH D L 1 CR LF	on.
Host	SOH M 1 2 D S CR LF	threshold level?
Converter	SOH D S 0 7 5 CR LF	75.

6.2.2.9 ER: Error Register 0

> NOTE
> Do not confuse data presented in the Error Registers with the error codes described in section 6.3.1 and 6.3.2.

This data register provides information about the processor recorded errors. The eight register bits represent eight different error types which are displayed as ASCII characters with the following format:

```
Bit7   Bit6   Bit5   Bit4   Bit3   Bit2   Bit1   Bit0
.      .      .      .      .      .      .      .
.      .      .      .      .      .      .      .
.      .      .      .      .      .      .      ERROR 1
.      .      .      .      .      .      .      A/D converter
.      .      .      .      .      .      .      positive out of range
.      .      .      .      .      .      ERROR 2
.      .      .      .      .      .      Vref too low
.      .      .      .      .      ERROR 3
.      .      .      .      .      flow rate exceeding 130%
.      .      .      .      ERROR 4
.      .      .      .      external cut off
.      .      .      ERROR 5
.      .      .      NVRAM data corrupted
.      .      ERROR 6
.      .      A/D converter negative out of range
.      ERROR 7
.      Vref too high (negative)
ERROR 8
Vref too high (positive)
```

Error messages are valid if the appropriate bits are set in the error register and if bit 7(=1) of the status register is set simultaneously (ST - 6.2.2.24). Data presentation is always eight digits long.

Example:

Instrument 05 is interrogated.

Host	SOH M 0 5 E R CR LF	error?
Converter	SOH E R 0 0 0 0 0 1 0 0 CR LF	error 3.

Converter 05 reports an error: flow rate > 130 %.

000309

6.2.2.10 E1: Error Register 1

See Error Register 0 (6.2.2.9 ER).

Bit7 Bit6 Bit5 Bit4 Bit3 Bit2 Bit1 Bit0

ERROR 0
empty pipe

(Bit 1 through bit 7 have no meaning.)

6.2.2.11 EI: Engineering Units for Maximum Flow

Units for Qmax DN (QN - 6.2.2.23), Qmax forward and reverse flow rate (Q> - 6.2.2.21), Qmax reverse flow rate (Q< - 6.2.2.22), and current flow rate in engineering units (DF - 6.2.2.5).

Data representation is always three digits.

Index numbers 224, 225 and 226 (US thousand gallons) are configurable (see Table 6-2). Default is in US thousand gallons.

TABLE 6-2. ENGINEERING FLOW UNIT INDEX

Index Number	Symbol	Definition
000	l/s	Liters
001	l/min	
002	l/h	
016	hl/s	Hectoliters
017	hl/min	
018	hl/h	
032	m^3/s	Cubic Meters
033	m^3/min	
034	m^3/h	
048	igps	Imperial Gallons
049	igpm	
050	igph	
064	mgd	US Gallons
065	gpm	
066	gph	
080	bbl/s	Barrels (31 gal)
081	bbl/min	
082	bbl/h	
096	bls/day	Barrels (42 gal)
097	bls/min	
098	bls/h	
112	kg/s	Kilograms
113	kg/min	
114	kg/h	
128	t/s	Metric Tons
129	t/min	
130	t/h	
144	gram/s	Grams
145	gram/min	
146	gram/h	
160	ml/s	Milliliters
161	ml/min	
162	ml/h	
176	Ml/min	Megaliters (million liters)
177	Ml/h	
178	Ml/day	
192	lbs/s	Pounds
193	lbs/min	
194	lbs/h	
208	uton/min	US Tons
209	uton/h	
210	uton/day	
224	kgal/s	US thousand gallons (configurable)
225	kgal/min	
226	kgal/h	

000311

6.2.2.12 EZ: Engineering Units for Totalizer

This parameter defines the engineering units for the flow totalizers (Z> - 6.2.2.28), reverse flow totalizer (Z< - 6.2.2.29), flow scaling factor (I> - 6.2.2.13).

Data representation is always three digits.

TABLE 6-3. TOTALIZATION UNIT INDEX

Index Number	Symbol	Definition
000	l	Liters
001	hl	Hectoliters
002	m^3	Cubic Meters
003	igal	Imperial Gallons
004	ugal	US Gallons
005	umg	Million US Gallons
006	bbl	Barrels (31 gal)
007	bls	Barrels (42 gal)
008	kg	Kilograms
009	t	Metric Tons
010	g	Grams
011	ml	Milliliters
012	Ml	Megaliters
013	lbs	Pounds
014	uton	US Tons
*015	kgal	US thousand gallons

* configurable

Example:
The Totalizer value of flow converter 07 is to be requested.

Host	SOH M 0 7 E Z CR LF	totalizer engrg. units?
Converter	SOH E Z 0 0 2 CR LF	m^3
Host	SOH M 0 7 Z > CR LF	forward flow totalizer?
Converter	SOH Z > 1 2 4 . 5 0 0 CR LF	124.5 m^3

6.2.2.13 I> : Scaling Factors: Forward and Reverse Flow

Output of the pulse scaling factor for forward flow (pulses/unit). Engineering units are stored with the Totalizer (EZ) parameter (see 6.2.2.12). Data presentation is seven data bytes.

Example:
The pulse scaling factor for forward flow of Signal Converter 07 is to be requested.

Host	SOH M 0 7 E Z CR LF	totalizer engrg. units?
Converter	SOH E Z 0 0 2 CR LF	m^3

000312

Host	SOH M 0 7 I > CR LF	pulse scaling factor-forward flow?
Converter	SOH I > 1 0 . 0 0 0 0 CR LF	10 pulses/m^3

6.2.2.14 I< : Scaling Factor Reverse Flow

See Scaling Factor Forward Flow (6.2.2.13).

6.2.2.15 IO: Current Signal Output

The presently configured current output signal is coded into a three digit parameter.

Index Number	Meaning
000	0-20 mA
001	4-20 mA
002	0-10 mA
003	2-10 mA
004	0-10-20
005	4-12-20

6.2.2.16 IA: Alarm Current Signal Output

In case of an alarm status the current and frequency outputs respectively, will go to the predetermined value. Data presentation is a single digit.

Index Number	Meaning
0	0%
1	130%

6.2.2.17 M: Percentage Flow Rate

In this case only one function character needs to be sent, a second one will be ignored.

Depending on the flow direction the converter will respond either with a '>' for forward flow or with a '<' character for reverse flow as the second function character. Data presentation is six digits .

Example:
The flow rate of converter 08 is interrogated.

Host	SOH M 0 8 M CR LF	flow rate?
Converter	SOH M < 9 0 . 0 1 5 CR LF	90.015% reverse.

000313

6.2.2.18 NG: System Zero Reference

Report the configured system zero reference in Hz. Data presentation is six digits.

Example:
Instrument 07 is requested to send its system zero reference data.

Host	SOH M 0 7 N G CR LF	zero reference?
Converter	SOH N G 1 . 5 6 3 3 CR LF	1.5633 Hz

6.2.2.19 NW: Meter Size (The meter size is reported as a three digit index number.)

TABLE 6-4. INDEX OF METER SIZES

Index Number	Meter Sizes	
	inches	mm
000	1/10	3
001	5/32	4
002	3/16	5
003	1/4	6
004	5/16	8
005	3/8	10
006	1/2	15
007	3/4	20
008	1	25
009	1 1/4	32
010	1 1/2	40
011	2	50
012	2 1/2	65
013	3	80
014	4	100
015	5	125
016	6	150
017	8	200
018	10	250
019	12	300
020	14	350
021	16	400
022	18	450

Index Number	Meter Sizes	
	inches	mm
023	20	500
024	24	600
025	28	700
026	30	750
027	32	800
028	36	900
029	40	1000
030	42	1100
031	48	1200
032	51	1300
033	54	1400
034	60	1500
035	64	1600
036	66	1700
037	72	1800
038	78	2000
043	1/25	1
045	1/12	2
44	1/17	1.5
39	82	2100
40	86	2200
41	90	2300
42	94	2400

Example:

The converter at address 25 is requested to report the meter size.

Host	SOH M 2 5 N W CR LF	meter size?
Converter	SOH N W 0 2 3 CR LF	20 inch (500 mm)

000315

6.2.2.20 PR: Firmware Version

Reporting of the firmware version number. The data length is eight alphanumerics.

Example:

What is the firmware version number of Instrument 09?

Host	SOH M 0 9 P R CR LF	firmware version?
Converter	SOH P R B 103 D10 CR LF	Rev. D.10 implemented

6.2.2.21 Q>: Maximum Flow Rate (Range)

Reporting of the setting of Qmax forward flow rate. Engineering units are stored with parameter EI, section 6.2.2.11. The presentation is seven data bytes.

6.2.2.22 Q<: Maximum Reverse Flow Rate

Reverse flow rate is automatically set the same as the forward flow rate (see 6.2.2.21).

6.2.2.23 QN: Maximum Flow Rate of Meter Size

Qmax of set meter size at a flow velocity of 10 m/s. Engineering units are stored with parameter EI, section 6.2.2.11. The presentation is seven data bytes.

Example:

Converter 07 is requested to report Qmax DN, Qmax forward flow and Qmax reverse flow. The engineering units are to be reported first.

Host	SOH M 0 7 E I CR LF	engineering units?
Converter	SOH E I 0 0 1 CR LF	l/min
Host	SOH M 0 7 Q N CR LF	Qmax DN?
Converter	SOH Q N 1 5 0 . 0 0 0 CR LF	150.0 l/min
Host	SOH M 0 7 Q > CR LF	Qmax forward?
Converter	SOH Q > 7 5 . 0 0 0 0 CR LF	75.0 l/min
Host	SOH M 0 7 Q < CR LF	Qmax reverse?
Converter	SOH Q < 7 . 0 0 0 0 0 CR LF	7.0 l/min

6.2.2.24 ST: Status Register

The status register bits are represented as ASCII characters '0' or '1' in the following order:

```
Bit7  Bit6  Bit5  Bit4  Bit3  Bit2  Bit1  Bit0
.     .     .     .     .     .     .     .
.     .     .     .     .     .     .     .
.     .     .     .     .     .     .     forward flow totalizer
.     .     .     .     .     .     .     overflow
.     .     .     .     .     .     reverse flow totalizer
.     .     .     .     .     .     overflow
.     .     .     .     .     internally used
.     .     .     .     parameter change via keypad
.     .     .     .     (automatically reset when being used)
.     .     .     internally used
.     .     low flow cut-off enabled
.     internally used
error register messages are valid
```

Data is presented as eight characters. For example, the "status" response from the instrument at address 09 could be:

Host	SOH M 0 9 S T CR LF	status
Converter	SOH S T 0 0 0 0 0 0 1 1 CR LF	forward and reverse flow totalizers overflow

6.2.2.25 SU: Noise Suppression

Parameter reflects the status of the digital filter.

Index Number	Meaning
0	noise suppression off
1	noise suppression on

One data byte.

Example:

Host	SOH M 0 0 S U CR LF	filter instrument 00 on ?
Converter	SOH S U 1 CR LF	yes.

000317

6.2.2.26 SM: Low Flow Cut-Off

Reporting of the low flow cut-off level in percent. Data format is seven bytes long.

Example:

Level of low flow cut-off of instrument 01.

Host	SOH M 0 1 S M CR LF	low flow cut-off?
Converter	SOH S M 1 . 5 0 0 0 0 CR LF	1.5 percent

6.2.2.27 SP: Language

Reporting of the currently set signal converter language as a three digit index number.

TABLE 6-5. LANGUAGE INDEX

Index Number	Language
000	German
001	English
002	French
003	Italian
004	Spanish
005	Finnish
006	Dutch
007	Danish
008	Swedish

Example:

Which language is used for the message display of Converter 23?

Host	SOH M 2 3 S P CR LF	language?
Converter	SOH S P 0 0 1 CR LF	English

6.2.2.28 Z>: Totalizer Forward Flow

Reporting of the forward flow totalizer contents. The presentation is dependent on the forward flow pulse scaling factor. Engineering units are stored in parameter EZ, paragraph 6.2.2.12. Data format is seven data bytes.(See 6.2.2.29 for example.)

6.2.2.29 Z<: Totalizer Reverse Flow

Reporting of the reverse flow totalizer contents. The presentation is dependent on the reverse flow pulse scaling factor. Engineering units are stored in parameter EZ, paragraph 6.2.2.12. Data format is seven data bytes.

Example:
The flow totalizer contents of signal converter 07 are to be interrogated.

Host	SOH M 0 7 E Z CR LF	totalizer engineering units?
Converter	SOH E Z 0 0 2 CR LF	m^3.
Host	SOH M 0 7 Z > CR LF	forward flow total?
Converter	SOH Z > 1 2 4 . 5 0 0 CR LF	124.5 m^3
Host	SOH M 0 7 Q < CR LF	reverse flow total?
Converter	SOH Z < 9 9 9 7 7 . 0 CR LF	99977 m^3.

6.2.3 Configuration Mode

Configuration mode provides the capability to change parameters or to execute a function. This is made possible by means of the function codes. The host addresses the signal converter as follows:

> NOTE
> Floating point numbers can be 7 characters including the decimal point. Table selection numbers can have leading zeros and be up to 3 characters.

Host Computer to Signal Converter

```
SOH   P   A1   A0   K1   K0   D7 - D0   CR   LF
.     .   .        .        .          .    .
.     .   .        .        .          .    .
.     .   .        .        .          .    Line Feed
.     .   .        .        .        Carriage Return
.     .   .        .        8 ASCII data bytes maximum
.     .   .        two ASCII Function Characters
.     .   two digit address in ASCII format
.    Configuration Mode
Start of Header = 01H
```

Response from Signal Converter:

```
Signal Converter to Host Computer
SOH   K1   K0   D7 - D0   CR   LF
.     .        .         .    .
.     .        .         .    .
.     .        .         .    Line Feed = 0AH
```

000219

```
.     .        .        Carriage Return = 0DH
.     .      maximum 8 ASCII data bytes
.    two ASCII Function Characters
Start of Header = 01H
```

If the input is numerically out of limits, the converter responds with an error message:

```
SOH   X   F1   F0   CR   LF
.     .   .        .    .
.     .   .        .    .
.     .   .        .    Line Feed = 0AH
.     .   .       Carriage Return = 0DH
.     .  two digit ASCII error code
.    X for Error Message
Start of Header
```

6.2.3.1 Configuration Mode Functions

6.2.3.2 AD: Address

The instrument address of the signal converter can be changed via the communications link. After the change the converter responds to the new instrument address. Maximum three data bytes.

Data value range:

0 < = entry > 100

Possible error message:

Error Code	Cause
22	entry > 99

NOTE
When the 50XM is used in a data link with MICRO-DCI instruments, the instrument address is restricted to 00 - 31.

Example:

Instrument address 01 is changed to address 00.

Host	SOH P 0 1 A D 0 0 CR LF
Converter	SOH A D 0 0 CR LF

6.2.3.3 AN: Display

The converter flow rate display can be in percent or engineering units. Decimal point and minus sign are ignored. Three data bytes maximum. Configuration is implemented by use of an index number:

Index Number	Meaning
0	Percent display
1	Engineering units display

Example:

The signal converter whose address is 06 shall display the flow rate in percent.

Host	SOH P 0 6 A N 0 0 0 CR LF
Converter	SOH A N 0 0 0 0 CR LF

6.2.3.4 BA: Baud Rate

The signal converter serial communications transmission speed can be reconfigured by changing the BA function parameter. After the change the converter operates with the new baud rate. No response message is issued to this configuration change. In case of an unsuccessful parameter change the converter issues an error message containing the old and still valid baud rate. The transmission baud rate is configured by an encoded index number. Refer to Table 6-6 below.

> NOTE
> The Baud rate can be set higher than the particular combination of terminal and converter can operate at. Also, any inadvertent change in the baud rate that results in a mis-match between the terminal and the converter can cause a loss of communication. A 1200 Baud rate is recommended as the upper limit for ASCII mode.

TABLE 6-6. BAUD RATE INDEX

Index Number	Baud
000	110
001	300
002	600
003	1200
004	2400
005	4800
006	9600
007	14400
008	28800

Note: The host will have to operate at the new baud rate when this command is given.

Possible error message:

Error Code	Cause
24	entry > 8

000221

Example:

The communications transmission speed is to be set to 1200 Baud.

Host	SOH P 0 0 B A 3 CR LF
Converter	no response

6.2.3.5 DP: Damping

Configuration parameter for signal damping. Maximum of seven data bytes including decimal point. Engineering units are seconds.

Valid data range:

0 < = entry < 100

Possible error messages:

Error Code	Cause
20	entry > = 100.0
21	entry < 0

Example:

The damping of instrument 05 is to be set to 11.5 seconds.

Host	SOH P 0 5 D P 1 1 . 5 CR LF
Converter	SOH D P 1 1 . 5 CR LF

6.2.3.6 DI: Density

Configuration parameter for density in g/cm^3. Maximum of seven data bytes including decimal point.

Valid data range:

0.01 < = entry < 5

Possible error messages:

Error Code	Cause
44	entry > 5.0
45	entry < 0.0
40	Maximum totalizer pulse signal frequency (forward or reverse flow) 10 kHz

Example:

The density parameter of the flow converter with instrument address 15 is to be set to 2.2845 g/cm^3.

Host	SOH P 1 5 D I 2 . 2 8 4 5 CR LF
Converter	SOH D I 2 . 2 8 4 5 CR LF

6.2.3.7 DM: Multiplexed Display

The display mode 'Multiplex Display' can be switched by an index number.

Index Number	Meaning
0	Multiplex display mode off
1	Multiplex display mode on

Example:

Display mode 'Multiplex Display' is to be set for instrument 31.

Host	SOH P 3 1 D M 0 0 1 CR LF
Converter	SOH D M 0 0 1 CR LF

6.2.3.8 DR: Empty Pipe Detector

The empty pipe detector function state can be switched by an index code number.

Index Number	Meaning
0	Empty pipe detector off
1	Empty pipe detector on

6.2.3.9 DS: Empty Pipe Detector Threshold

The empty pipe detector threshold setting can be changed within the limits 0 to 155. The data presentation is always three digits in length.

Valid data range:
0 < = entry < 156

Possible error messages:

Error Code	Cause
56	entry > 155

000023

6.2.3.10 EI: Engineering Units for Maximum Flow

The engineering units are configured by a three digit index number for Qmax DN (QN), Qmax forward flow rate (Q>), Qmax reverse flow rate (Q<), and current flow rate (DF) in engineering units. Refer to Table 6-2 for Flow Unit Index.

Possible error messages:

Error Code	Cause
48	wrong index number

Example:
Signal Converter 06 shall be set for a flow rate in l/min:

Host	SOH P 0 6 E I 0 0 1 CR LF
Converter	SOH E I 1 CR LF

6.2.3.11 EZ: Engineering Units for Totalizer

The engineering units are configured by a three digit index number. This parameter defines the units for the forward flow totalizer (Z>), reverse flow totalizer (Z<), flow scaling factor (I>), and reverse flow scaling factor (I<). Refer to Table 6-3 for Totalization Unit Index.
Possible error messages:

Error Code	Cause
52	index number > 9
40	Totalizer pulse frequency > 4 kHz

Example:

The flow converter 06 shall be set for totalizing m^3.

Host	SOH P 0 6 E Z 0 0 2 CR LF
Converter	SOH E Z 2 CR LF

6.2.3.12 I> : Pulse Scaling Factor

Configuration parameter for the forward flow scaling factor (Pulses/engineering unit). Engineering units are stored with the Units for Totalizer (EZ) parameter. Data presentation is seven data bytes.

Valid data range:

0.001 < = entry < = 1000

Possible error messages:

Error Code	Cause
38	entry > 1000

000324

39	entry < 0.001
40	maximum pulse frequency > 4 kHz

Example:

The pulse scaling factor for Signal Converter 23 is to be set to 100.0 pulses/unit.

Host	SOH P 2 3 I > 1 0 0 . 0 0 0 CR LF
Converter	SOH I > 1 0 0 . 0 0 0 CR LF

6.2.3.13 IO: Current Signal Output

The configured output signal is encoded into a three digit parameter:

Index Number	Meaning
000	0 - 20 mA
001	4 - 20 mA
002	0 - 10 mA
003	2 - 10 mA
004	0 - 10 - 20 mA
005	4 - 12 - 20 mA

Possible error messages:

Error Code	Cause
62	entry >

6.2.3.14 IA: Alarm Current Signal Output

In case of an alarm condition the current and frequency outputs will go to the predetermined value. The maximum data length is three digits.

Index Number	Meaning
0	0%
1	130%

6.2.3.15 LZ: Totalizer Reset

This instruction resets the overflow condition status message (see ST: Status Register, 6.2.2.24) and the totalizers for both flow directions. No data is transmitted.

Example:
The totalizers of instrument 00 are reset.

000325

Host	SOH P 0 0 L Z CR LF
Converter	SOH L Z CR LF

6.2.3.16 LV: Forward Flow Totalizer Reset

This instruction resets the overflow condition status message (see ST: Status Register, 6.2.2.24) and the forward flow totalizer.

Example:
The forward flow totalizer of instrument 00 is to be reset.

Host	SOH P 0 0 L V CR LF
Converter	SOH L V CR LF

6.2.3.17 LR: Reverse Flow Totalizer Reset

This instruction resets the overflow condition status message (see ST: Status Register, 6.2.2.24) and the reverse flow totalizer.

Example:

The reverse flow totalizer of instrument 00 is to be reset.

Host	SOH P 0 0 L R CR LF
Converter	SOH L R CR LF

6.2.3.18 NW: Meter Size

The meter size is configured with a three digit index number. Refer to Table 6-4 for Index of Meter Sizes.

Error Code	Cause
30	entry > 45

6.2.3.19 NG: System Zero Reference

System zero reference may be configured +/- 500 Hz where the flow direction is marked by the sign designator (- for reverse, + for forward flow).

Valid data range:

- 500 < = entry < = 500

Possible error messages:

Error Code	Cause
54	entry > 500 or entry < -500

6.2.3.20 Q>: Maximum Flow Rate (Range)

Configuration of the setting of Qmax for flow rate. Engineering units are stored with parameter EI, Section 6.2.2.11 (see Table 6-2). The parameter data length is seven data bytes maximum:

Valid data range:

0.05 Qmax DN < = entry < = Qmax DN

Possible error messages:

Error Code	Cause
10	entry > Qmax DN
11	entry < 0.05 Qmax DN

Example:

The maximum forward flow setting of instrument 20 is to be set to Qmax = 125 l/s.

Host	SOH P 2 0 Q > 1 2 5 CR LF
Converter	SOH Q > 1 2 5 CR LF

6.2.3.21 QN: Maximum Flow Rate of Meter Size

If the Range DN parameter is set to "programable", it is possible to directly configure the Qmax DN parameter. The configuration procedure is as described under 6.2.2.21 for Q>: Max Forward Flow Rate.

Valid data range:

0 < entry < 9 999 999

Possible error messages:

Error Code	Cause
12	Qmax DN not configurable
13	entry < = 0

6.2.3.22 SM: Low Flow Cut-Off

Configuration of the low flow cut-off parameter in percent. Data length is seven digits maximum.

Valid data range:

0 < = entry < = 10

Possible error messages:

Error Code	Cause
16	entry > 10.0
17	entry < 0.0

000227

Example:

The low flow cut-off parameter of instrument 27 is to be set to 1.5%.

Host	SOH P 2 7 S M 1 . 5 0 0 CR LF
Converter	SOH S M 1 . 5 0 0 0 0 CR LF

6.2.3.23 SP: Language

Configuration of the flow converter's display language as a three digit index number. Refer to Table 6-5 for Language Index.

Possible error messages:

Error Code	Cause
36	entry > 8

6.2.3.24 SU: Noise Suppression

Switching of the noise suppression filter on or off.

Index Number	Meaning
0	filter off
1	filter on

Example:

Noise suppression of instrument 02 has to be switched on.

Host	SOH P 0 2 S U 1 CR LF
Converter	SOH S U 1 CR LF

6.3 Error Messages

The signal converter data received is checked for conformance with the communications protocol and for validity. If an error is detected the converter returns an error message:

```
SOH  X  F1  F0  CR  LF
.    .  .       .   .
.    .  .       .   .
.    .  .       .   Line Feed = 0AH
.    .  .      Carriage Return = 0DH
.    .  two digit error code in ASCII
.    X for error message
Start of Header
```

6.3.1 Protocol and Communications Errors

Error No.	Cause
01	Bad operation mode (M for Monitor Mode and P for Configuration Mode only)
02	Bad function characters
03	Configuration not permitted, since this is protected calibration parameter
04	Number of data bytes exceeded
05	Parity error

Example:

The instrument at address number 11 should have been configured for 100 l/min. The number of transmitted parameter configuration data bytes however, was eight instead of seven.

Host	SOH P 1 1 Q > 1 0 0 . 0 0 0 0 CR LF
Converter	SOH X 0 4 CR LF

000229

6.3.2 Configuration Error Messages

Error No.	Function Character	Cause
10	Q > Q <	Entry > Qmax DN
11	Q > Q <	Entry < 0.05 Qmax DN
12	QN	Qmax DN not configurable
13	QN	Qmax DN < = 0
16	SM	Entry > 10
17	SM	Entry < 0
20	DP	Entry > = 100
21	DP	Entry < 0
22	AD	Entry > 99
24	BA	Entry > 8
30	NW	Entry > 40
36	SP	Entry > 8
38	I>	Entry > 1000
39	I>	Entry < 0.001
40	I > I < DI EZ	Totalizer frequency > 4 kHz
44	DI	Entry > 5
45R	DI	Entry < = 0.01
48	EI	Bad Index Number
52	EZ	Entry > 9
54	NG	Entry > 500 or < -500
56	DS	Entry > 155
62	IO	Entry > 3

6.4 Remote Display

A "live" remote display of the 50XM1000 function can be implemented by use of a data terminal that is connected via the serial communications link. All information which is displayed by the converter's self-contained indicator can also be viewed at the data terminal in this operation mode. Also, the 50XM1000 Converter is configurable from the data terminal.

For communications 1200 or 2400 Baud is recommended. Two typical terminal types are discussed below.

a) ANSI Terminal (i.e. VT100)
b) Data Terminal (Teletype)

6.4.1 ANSI Terminal

Communication with an ANSI terminal is established with the following instruction:

```
SOH  P  A1  A0  ESC  X  A  N  S  I  CR  LF
.    .  .   .   .    .  .  .  .  .   .   .
.    .  .   .   .    .  .  .  .  .   .   Line Feed = 0AH
.    .  .   .   .    .  .  .  .  .   Carriage Return = 0DH
.    .  .   .   .    .  .  ANSI
.    .  .   .   .    X
.    .  .   ESC = 1BH
.    .  two digit Instrument Address in ASCII
.    P for Configuration Mode
Start of Header = 01H
```

The connection is terminated with the instruction.

ESC O S

The 50XM1000 Converter transmits escape sequences and control characters for the following functions:

ESC Sequence/Control Character	Function
ESC [2 J ESC H	clear screen and cursor home
ESC [H	cursor home
ESC [2 ; 1 H	position cursor at beginning of second line
ESC [C	move cursor right
ESC [D	move cursor left
BEL	ring bell

000331

For proper communication, the following terminal keys must be available:

TABLE 6-7. ANSI TERMINAL KEYS

Key	ASCII Character	HEX Code
0	0	30
1	1	31
2	2	32
3	3	33
4	4	34
5	5	35
6	6	36
7	7	37
8	8	38
9	9	39
.	.	2E
RETURN	CR	0D
DEL	DEL	7F
-	-	2D
^ v	ESC [A ESC [B	1B 5B 41 1B 5B 42

000332

6.4.2 Data Terminal

If a data terminal is used as a remote display station, the following instruction must be used for establishing communications.

```
SOH   P   A1   A0   ESC   X   T   E   R   M   CR   LF
.     .   .        .     .   .                .    .
.     .   .        .     .   .                .    .
.     .   .        .     .   .                .     Line Feed = 0AH
.     .   .        .     .   .               Carriage Return = 0DH
.     .   .        .     .   TERM
.     .   .        .     X
.     .   .       ESC = 1BH
.     .  two digit Instrument Address in ASCII
.     P for Configuration Mode
Start of Header = 01H
```

The connection is terminated with the instruction.

ESC O S

The 50XM1000 Converter utilizes the following control characters:

Control Character		Function
ASCII	HEX	
CR LF	0D 0A	move cursor to beginning of next line
VT CR	0B 0A	move cursor to beginning of previous line
CR	0D	move cursor to beginning of current line
HT	09	move cursor to right
BS	08	move curser to left
BEL	07	ring bell

For operation, refer to 6.4.1 for terminal key assignment.

000333

6.5 Binary Communications Mode

6.5.1 Application

The binary communications mode is intended for use as a high speed data link between up to 32 microprocessor-based instruments (MICRO-DCI series, 50XM1000, etc.) and a host computer. In the binary mode, information is compressed so that it may be sent approximately twice as fast as in the ASCII mode. However, this format is not compatible with "dumb" terminals. The binary interface permits the user to write programs which automatically extract or change data in the signal converter at regular intervals. These programs are in a different notation, with the IBM PC version executed using BASIC with customized subroutine calls. (Additional information regarding data communication is provided in Section 6.4 Remote Display).

In binary mode, it is possible to read and write as many times as desired in any order from a host computer or MICRO-DCI SUPERVISOR. The database for the 50XM1000 is defined in Section 6.6.

To initialize the signal converter for binary communications proceed as follows. The relevant data points can be set via the signal converter pushbuttons as previously discussed.

Using the DATA LINK submenu, preset the following:

a) Under COMMUNICATION, select "binary."

b) Under INSTRU.ADDRESS, select unique 2-digit address (00-31).

c) Under BAUDRATE, select 1200 Baud (typical).

6.5.2 Firmware Characteristics

1. Transparency Rule

Whenever 7E (Hex) is transmitted as anything other than SOH, a 00 byte must be inserted directly following it.

2. All transactions are initiated by the Host.

3. All instruments will begin their response within 10 ms after the end of the transmission by the Host; otherwise a faulty transmission may be assumed.

4. Illegal messages received by the instruments will be ignored.

5. The host must acknowledge the instrument's response to a change request within 100 ms or the request will be ignored.

6. A break of 100 ms in a message will cause the instrument to ignore the part before the break.

7. The maximum number of data bytes per message is 50.

6.5.3 Hardware Characteristics

1. Transmission Speed - 28,800 for 50XM1000B with 53SU1000 or 53SU5000, or 9600 for other computers (typical).

2. Asynchronous by character.

3. A binary communication character is -

   1 Start bit.
   8 Data bits,LSB is transmitted first.
   1 Even parity bit.
   1 Stop bit.

4. Line is 4-wire; shielded twisted pair, RS-485 levels.

6.5.4 Protocol Description

The binary protocol used requires the host computer to initiate all transactions. It does this by sending either one of the following message types:

1) Interrogate - used if it simply wants to read.
2) Change - used if it wants to alter the value.

The addressed instrument decodes the message and provides an appropriate response.

6.5.4.1 Definition of Message Fields

NOTE
Numbers and/or characters used in this section are expressed in the Hexadecimal Number System (base 16).

SOH	Start of Header. This character, 7E denotes the beginning of a message.
I.A.	Instrument Address. The address of the instrument involved in the message. The I.A. must be in the range of 00 - 1F.
NUM	Number of bytes of data being transferred or requested. Must be in the range of 00 to 32.
LO-ADD	The least significant 8 bits of a 10 bit address in the instrument.
HI-ADD	The most significant 8 bits of a 10 bit address in an instrument.
DATA	An 8 bit data byte.
XXXX	Represents a variable number of data bytes.

000235

MASK	A byte containing "0" in bit positions where a change is to occur, and a "1" in other positions.
STATE	A byte containing "1"s in bit positions that are to be set to a "1", and "0"s in other positions.
LRC	Longitudinal Redundancy Character - Modulus FF sum of all bytes in the message, except for SOH and LRC.

6.5.5 Message Types

6.5.5.1 Host to Instrument

1. INTERROGATE

This message requests up to 16 consecutively stored bytes, beginning at the specified address of the addressed instrument.

NOTE
XXXXXXXX represents an 8-bit message to be sent with start, parity, and stop bits.

```
01111110      E0 + I.A.      NUM      LO ADD      HI ADD      LRC
```

2. CHANGE

This message sends up to 16 bytes of new data to the addressed instrument.

```
01111110    A0 + I.A.    NUM    LO ADD    HI ADD    Data 1    XXXXXXXXX

Data N    LRC
```

3. CHANGE BITS

This message alters only the specified bits in the specified bytes in the addressed instrument.

```
01111110    C0 + I.A.    NUM    LO ADD    HI ADD    Mask 1    State 1

XXXXXXXXX    Mask N    State N    LRC
```

4. ACKNOWLEDGE

This message signals the addressed instrument that its last message was received correctly. Instrument performs the change requested.

01111110 80 + I.A.

000336

6.5.5.2 Instrument to Host (Response)

This message furnishes the data requested by the INTERROGATE command of the Host.

- or -

This message echoes back the previous CHANGE message of the Host.

```
01111110    20 + I.A.    NUM    LO ADD    HI ADD    Data 1

Data N    LRC
```

6.5.5.3 Communication Transaction Examples

Example - Transaction A

1) Host sends INTERROGATE message.

Host requests 9 bytes of data, beginning at address 1000H from the instrument at address 03.

```
01111110    11100011    00001001    00000000    00010000    11111100
SOH         Command       NUM       LO ADD      HI ADD        LRC
```

2) Instrument sends RESPONSE message

```
01111110      00100011      00001001      00000000      00010000
  SOH         Command         NUM         LO ADD        HI ADD

 XXXXXXXXX    XXXXXXXXX    XXXXXXXXX      LRC
  Data 1.................Data 9
```

Example - Transaction B

1) Host sends CHANGE message

Host sends two bytes of new data, to be loaded into the instrument at address 03 beginning at address 1000.

```
01111110    10100011    00000010    00000000    00010000    00001000
  SOH       Command       NUM       LO ADD      HI ADD      Data 1

000001100   11001001
  Data 2      LRC
```

2) Instrument sends RESPONSE message.

```
01111110   00100011   00000010   00000000   00010000   00001000   00001100
  SOH      Command      NUM       LO ADD     HI ADD     Data 1     Data 2

                                 01001001
                                   LRC
```

000337

3) Host sends ACKNOWLEDGE message.

```
01111110    10000011
  SOH       Command
```

4) Instrument performs the change requested at end of the current control sequence (within 100 ms).

6.5.6 Finding Data Addresses

In order to make use of the Binary Communications Mode, the HOST computer must have intimate knowledge of how the data is stored in the instruments connected to the data link. The following paragraphs show how to compute the actual address of the data as stored in a Series 50XM1000B Signal Converter.

> NOTE
> Numbers followed by "H", as 000CH, indicate number is expressed in Hexadecimal number system.

Each data type has a particular base number which is used in the following computations.

B Base = 00H

L Base = 28H

C Base = 2EH

H Base = B5H

The L (logical) data points are packed 8 to a byte. For example: L07, L06, L05, L04, L03, L02, L01, L00, is one byte.

A logical data point address is determined in the following manner:

$$\text{Address} = \text{L Base} + \frac{\textit{L number}}{8}$$

Example: To find address of logical data point L14,

$$\text{L14 address} = 28\text{H} + \frac{14}{8} = 29\text{H}$$

> NOTE
> In these calculations we ignore fractions, as 14 ÷ 8 resulted in 1.75 or 1-3/4. This quotient of 1 was added to 28H to give a sum of 29H.

The Byte data types are easily located, the calculation being as follows:

Address = B Base + (B number)

000338

The C data types are floating point numbers and are made up of 3 bytes each. The first two bytes represent a 2's complement fraction whose absolute value is between 0.5 and 0.9999. The third byte is a 2's complement power of 2.

For example, the representation of 100.0 is -

```
64H,00H,07H   .XXXX  x 2^(n)          EXP may range
                                       from -128 to +127
          +0.5 to 0.9999
```

To find address of C data types we use the following formula:

```
Address = C Base + (3 x C number)
```

The H data types are comprised of 5 bytes each. They are represented in the same manner as the C types, except the fractional part is 4 bytes long.

For example; representation of 100.00 is -

```
64H,00H,00H,00H,07H
```

To find address of H data types we use the following formula:

```
Address = H Base + (5 x H number)
```

000369

6.6 DATA BASE

The 50XM1000 may be integrated into a MICRO-DCI system via the MICRO-DCI binary communications protocol.
The 50XM1000 Converter hardware must be equipped with a RS485 interface assembly. Also, the 50XM1000 must first be configured by entering the communications sub menu and then selecting the MICRO-DCI binary protocol, the instrument address and baud rate.

6.6.1 50XM Converter Data Base

Data base types are divided into four groups:

a) B-type (8 bit binary)
b) L-type (logical parameters),
c) C-type (single precision floating point numbers)
d) H-type (double precision floating point numbers)

6.6.1.1 B-Type Data Points

Data Point	Function	Explanation
B06	Current Output	000 0 - 20 mA
		001 4 - 20 mA
		002 0 - 10 mA
		003 2 - 10 mA
		004 0-10-20 mA
		005 4-12-20 mA
		006 0-5 mA
B11	Totalizer Engineering Units	000 l (Liters)
		001 hl (Hectoliters)
		002 m3 (Cubic Meter)
		003 igal (Imperial Gallons)
		004 ugal (US Gallons)
		005 umg (Million US Gallons)
		006 bbl (Barrels)
		007 bls (Liquid Barrels)
		008 kg (Kilograms)
		009 t (Tons)
		010 g (Grams)
		011 ml (milliliter)
		012 Ml (megaliters)
		013 lbs (pounds)
		014 uton (US tons)
		015 kgal (US thousand gallons
B19	Unit Number	16 Bit binary number MSB
B20		16 Bit binary number LSB

000340

Data Point	Function	Explanation
B21	Language	000 German
		001 English
		002 French
		003 Italian
		004 Spanish
		005 Finnish
		006 Dutch
		007 Danish
		008 Swedish
B22	Rate Engineering Units	000 l/s
		001 l/min
		002 l/h
		016 hl/s
		017 hl/min
		018 hl/h
		032 m3/s
		033 m3/min
		034 m3/h
		048 igps
		049 igpm
		050 igph
		064 mgd
		065 gpm
		066 gph
		080 bbl/s
		081 bbl/min
		082 bbl/h
		096 bls/day
		097 bls/min
		098 bls/h
		112 kg/s
		113 kg/min
		114 kg/h
		128 t/s
		129 t/min
		130 t/h
		144 g/s
		145 g/mi
		146 g/h
		160 ml/s
		161 ml/min
		162 ml/h
		176 Ml/min
		177 Ml/h
		178 Ml/day
		192 lbs/s
		193 lbs/min
		194 lbs/h
		208 uton/min
		209 uton/h
		210 uton/day
		224 kgal/s

000341

Data Point	Function	Explanation
		225 kgal/min
		226 kgal/h

Data Point	Function	Explanation	
B24	Meter Size	000	3 mm 1/10 in
		001	4 mm 5/32 in
		002	5 mm 3/16 in
		003	6 mm 1/4 in
		004	8 mm 5/16 in
		005	10 mm 3/8 in
		006	15 mm 1/2 in
		007	20 mm 3/4 in
		008	25 mm 1 in
		009	32 mm 1-1/4 in
		010	40 mm 1-1/2 in
		011	50 mm 2 in
		012	65 mm 2-1/2 in
		013	80 mm 3 in
		014	100 mm 4 in
		015	125 mm 5 in
		016	150 mm 6 in
		017	200 mm 8 in
		018	250 mm 10 in
		019	300 mm 12 in
		020	350 mm 14 in
		021	400 mm 16 in
		022	450 mm 18 in
		023	500 mm 20 in
		024	600 mm 24 in
		025	700 mm 28 in
		026	750 mm 30 in
		027	800 mm 32 in
		028	900 mm 36 in
		029	1000 mm 40 in
		030	1100 mm 42 in
		031	1200 mm 48 in
		032	1300 mm 51 in
		033	1400 mm 54 in
		034	1500 mm 60 in
		035	1600 mm 64 in
		036	1700 mm 66 in
		037	1800 mm 72 in
		038	2000 mm 78 in
		039	2100 mm 82 in
		040	2200 mm 86 in
		041	2300 mm 90 in
		042	2400 mm 94 in
		043	1 mm 1/25 in
		044	1.5 mm 1/12 in
		045	2 mm 2 in

000342

Data Point	Function	Explanation	
B25	Baud Rate	000	110 Baud
		001	300 Baud
		002	600 Baud
		003	1200 Baud
		004	2400 Baud
		005	4800 Baud
		006	9600 Baud
		007	14400 Baud
		008	28800 Baud
B30	Error Register		
B32	Empty pipe Threshold	Threshold for empty pipe detection	

000343

6.6.1.2 L-Type Data Points

NOTE
All parameters marked by an asterisk (*) are used internally. All parameters marked by an (r) are read only.

Data Points	Function	Explanation
L00 r	Error 1	A/D converter out of range (positive)(1=true)
L01 r	Error 2	Vref too low
L02 r	Error 3	Flow signal greater than 130%
L03 r	Error 4	external cut-off
L04 r	Error 5	NVRAM defective
L05 r	Error 6	A/D converter out of range (negative)
L06 r	Error 7	Vref too high (positive)
L07 r	Error 8	Vref too high (negative)
L18 r	Flow Direction	Forward flow (1) Reverse flow (0)
L25 r	*Flow indication	Normal(0)/ reverse (1)
L26	Cal factor	Fixed (0) Configurable (1)
L29	Cal factor	10 m/s (0) 33.33 ft/s (1)

6.6.1.3 C - Type Data Points

NOTE
All parameters marked by an asterisk (*) are used internally.
All parameters marked by an (r) are read only.

Data Point	Function	Explanation
C00 r	Low flow cut off	Low flow cutoff
C04	Density	Density
C05 r	Pulse factor	Pulse factor
C07 r	Damping	Damping
C14 r	Flowrate	Flow rate as a percent of span

000345

6.6.1.4 H - Type Data Points

NOTE
Parameters marked by an (r) are read only.

Data Point	Function	Explanation
H00	Totalizer > F	Totalizer counts forward flow in Engineering units (see B11)
H01	Totalizer < R	Totalizer counts reverse flow in Engineering units (see B11)
H02	Cal factor	Engineering units $m^3/hr^{@}$
H03	Span	Engineering units $m^3/hr^{@}$
H11 r	Flow rate	Flow rate in customer units

[@]Engineering units must be in m^3/h and Qmax DN must be set to 10 m/s.

000346

6.6.1.5 Auxiliary Devices

The F&P Series 53HC3300 is a set of firmware programs designed for use with IBM AT or XT personal computers. These programs are designed to assist the user in generating customer programs for the MICRO-DCI family of microprocessor based instruments. The host computer can serve as a programming terminal for MICRO-DCI instruments, or as an engineering data terminal for configuration and data display in conjunction with a new series of "smart" instruments such as the 50XM1000 Signal Converter.

The following programs that will find use with the 50XM1000 Converter are:

PC DRIVER - The MICRO-DCI PC Driver consists of four assembly language subroutines which are called from a user written BASIC program. These subroutines provide a simple interface to the MICRO-DCI data link binary communications protocol. With these subroutines the user can access and/or modify any data base location of a MICRO-DCI or other "smart" instruments connected to the PC via serial ports or via F&P SUPERVISOR-PC board.

Refer to Instruction Bulletin 53HC3300 for program loading procedures, subroutine call statements, operating instructions, etc.

6.6.1.6 HART Interface

The optional HART protocol system, when supplied, permits simultaneous 4-20 mA and digital signal transmission on the same 2-wire cable. With this protocol, process parameters such as instantaneous flow rate and cumulative total flow, or operating conditions such as alarm values, can be monitored or altered by an external "smart " device, e.g., a host computer. This interface allows the 50XM1000 data base to be uploaded into the host computer. Operating parameters which would only be changeable at the 50XM Converter can be scanned and remotely reconfigured.

Firmware and hardware are optionally available to implement a HART Protocol information exchange between the converter and the F&P 50HC1000 hand-held computer. This data link permits continuous monitoring of process variable and totalized flows and provides for configuration of the following:

- Values and units for range
- Pulse factor and units for totalizers as well as reset capability
- Damping, noise reduction, low flow cutoff value
- Empty pipe detector setup
- Alarm fail safe condition
- Converter tag name and record information
- Calibration of the analog (4 - 20 mA) output

The following parameters may be displayed but not configured:

- Meter size and calibration factor
- Instrument type (50XM1000) and manufacturer (F & P)
- Totalizer overflow values

Refer to the 50HC1000 Hand-Held Computer Instruction Bulletin for detailed information regarding application of HART Protocol.

When implementing the HART protocol, the control computer is the master and the field transmitter the slave. In addition to this primary master a second master (such as the Series 50HC1000 Hand-

000347

Held Computer) can become active. Data is transmitted at 1200 baud, with the serial information being encoded and detected as outlined in the Bell 202 standard.

7.0 MAINTENANCE

7.1 General Discussion

The 50XM1000 Signal Converter is a microprocessor-based instrument. All computations, data manipulation and sequencing operations are software controlled. Display of flow rate and the cumulative total flow are performed automatically concurrent with flow through the associated flowmeter. As the flowmeter has no moving parts that are subject to mechanical wear and the signal converter has no operating controls that require field adjustment, there are no recommended periodic tests to be performed. As a result, routine system maintenance is not required.

If in the course of operation the signal converter does not perform as expected, it is normal for the operator to first suspect that the software configuration is faulty. Although this may occasionally be true, it should be emphasized that the EPROM and non-volatile memory devices used in the signal converter are highly reliable. Should a malfunction be evident, remove the signal converter housing cover and see if the CPU light is energized. (This LED is located on the lower right corner of the converter assembly as shown in Figure 7-1.) When the CPU light is energized steadily, it is probable that the microprocessor and associated memory devices are functional. In this case, proper operation of the flowmeter should be established before troubleshooting the signal converter.

Due to the complexity of troubleshooting microprocessor-based instruments, maintenance beyond the assembly level is not recommended. If troubleshooting of the signal converter assembly is attempted, it should be noted that many of the CMOS type IC chips used in this assembly are static sensitive devices that can be internally damaged if not handled properly. Also, caution must be used when connecting test probes, as even a momentary accidental short may damage or destroy an integrated circuit. Further, although protection is provided against electro-static effects by built-in circuitry, the following precautions should be taken if it is necessary to handle the 50XM Converter printed circuit assembly:

1) Ground all test equipment.

2) Technicians should use grounding-type wrist straps.

3) The surface of the service bench should be grounded to preclude static electric build-up.

4) All CMOS devices should be stored or transported in materials that are anti-static. (Do not use ordinary plastic wraps or bags). Typically, protection of the converter assembly can be effected by first covering the printed circuit assembly with aluminum foil and then providing an outer wrap of heavy paper.

When a system malfunction is evident, the first step is to determine whether the problem is hardware or software related. If the signal converter appears to respond normally to functional operations such as those expected to occur during the course of parameter monitoring, self test procedures, etc., and system constants can be verified as correct - but the displayed process values are wrong, then proper operation of the flowmeter should be verified.

When the signal converter exhibits total failure (no display can be obtained on the LCD), then possible loss of the external power source or an internal hardware malfunction could be the cause. A

simple volt-ohm analysis will quickly indicate whether the problem is external or internal. Use of a conventional V-O-M type multimeter is considered adequate for voltage and resistance analysis. An electronic frequency counter and oscilloscope will also be useful for verifying the output frequency rate, signal tracing, etc.

In the event of a hardware malfunction, a replacement converter assembly can be quickly substituted for the defective assembly, thereby minimizing system downtime. F&P Company offers a factory repair/exchange program to facilitate replacement of a defective electronics module, i.e., the complete signal converter assembly. Under this repair/exchange program a fixed price will be charged to the account of the customer for replacement of defective equipment, with appropriate credit issued when the repairable unit is received by F&P (shipping charges prepaid).

When communicating with F&P in regard to a replacement converter assembly, it is important to refer to the complete instrument serial number and model number to assure that the correct replacement assembly will be provided. The serial number and model number are given on the F&P manufacturing specification sheet and on the instrument nameplate (attached to the housing base). Should any doubt arise regarding the proper procedure for solving a service problem, it is suggested that users contact their local F&P service facility for technical assistance.

000350

7.2 Signal Converter Disassembly

Should it be necessary to disassemble the signal converter for calibration, troubleshooting, or replacement of a defective assembly, proceed as outlined below.

7.2.1 Removing Converter Module from Housing

WARNING
Equipment powered by an ac line service constitutes a potentially lethal electric shock hazard. Always de-energize system power before removing the housing cover.

1) To remove the converter housing cover, unscrew the four hex head mounting screws located in the corners of the cover. These are captive-type screws and should not be removed from the housing cover. Store the housing cover for re-assembly.

2) On top of the digital printed circuit board (see Figure 7-1), unscrew the four screws that pass through the
1-7/8 inch standoffs located near the corners of the converter module. Support the converter module while removing the last of the 4 mounting screws. This will prevent excessive strain on interconnection cables. Save this mounting hardware.

3) Disconnect the 20-pin ribbon-type signal cable from receptacle 1X2 (located on the lower left edge of the analog board). Disconnect the 3-pin power plug from receptacle 1X1 (located on the lower right edge of the analog board).

The converter module is now disconnected and can be removed from the housing.

7.2.2 Disassembly of Signal Converter Module

To obtain access to optional plug-in assemblies located on the analog board (see Figure 7-1), it is necessary to separate the two pc boards as outlined below.

1) Unscrew the four 5/16 inch hex nuts that secure the digital board to the 1-7/8 inch standoffs. Save this hardware.

The digital board can then be lifted slightly and tilted up (away) from the lower pc board.

2) If it is desired to separate the analog and digital pc boards, disconnect the 26-pin interboard cable from receptacle 1X3 on the analog board.

The converter module can be reassembled by performing the above procedure in reverse order.

000351

7.3 Troubleshooting

A series of simple tests may be performed on the signal converter module to determine problem areas. If proper converter operation cannot be achieved when these steps are completed, then it should be assumed that the converter has a failed component, most of which are not field replaceable. It is assumed that persons following this procedure are thoroughly familiar with operation of the device and that the entire flowmeter system has previously operated correctly. **Servicing of the signal converter should only be attempted by a qualified electronics technician.**

> NOTE
> It is possible to place incorrect data into the converter when using the MICRO-DCI binary interface. If this interface has been used to change parameters, verify that all converter data is within proper limits before continuing troubleshooting.

7.3.1 Procedure

Typical troubleshooting procedure is outlined here. The appropriate response or course of action is indicated by " • ".

1. System has no output, display and CPU LED not illuminated:

   • Check power fuse on converter assembly. (Component location is shown in Figure 7-1.)

   • Verify power input source is operational and that the applied voltage is correct.

2. No characters present on display:

   • Check display contrast adjustment, R207, on Digital pc board.

3. Error messages appear on display instead of the normal flow rate and totalization information:

   • Attempt to determine the source of any error message (some are detailed further on in this procedure). Error code numbers are also defined in Section 4.0 Functional Description.

   • Check system interconnection wiring for loose connections, open or shorted cable(s), etc.

4. Garbled information or missing characters appear on the display:

   • Execute the display self-test. Assuming no other problems exist, the converter can operate without a display, except that no data can be changed.

5. Converter output does not appear to be correct but display information seems OK:

   • Move to the "SELF-TEST" menu and execute the I_{out} and F_{out} functions. The Frequency self-test will also produce both a 10 kHz and an active pulse output. On some units, a fuse is present on the digital pc board in series with I_{out}. The integrity of the fuse should be verified if no analog output current is present.

6. Error message "U-REF too low" or "U-REF too high" present:

000352

* Check for proper reference voltage (+/-65 to +/-75 mV). Use S204 on digital pc board (see Figure 7-1) to place reference voltage into a dc condition (switch set to "open" for negative, toward board edge for positive). Always return S204 to the "as found" position.

* Check magnet coil wiring (in flowmeter) for proper circuit resistance.

* Cycle converter power off and on.

7. CPU LED is flashing (it should be on continuously):

* Cycle converter power off and on.

8. Error message "NVRAM Defect" appears on display:

* Log all process parameters (range, damping, totalizer factors, etc.) and enter the "code 1000" mode. Step to the "INITIALIZE" menu and press "ENTER". Manually load all calibration parameters back into converter as they appear on the attached tags.

NOTE
If the initialize routine is invoked, the converter must be recalibrated. Refer to Section 5.0.

9. Error message "A to D OVERLOAD" appears in display:

* Check for incorrect range, non-full pipe, excessive flow noise, incorrect reference, improper grounding, excessive dc voltage on meter electrodes.

* Apply a short circuit between flowmeter terminals 1, 2, and 3 (except on model 10D1477). The current output should drop to less than 1% of calibration factor (Range DN).

10. Converter does not appear to be in calibration:

* Using the 55XC2000 Flow Simulator, apply input signals representing various points within the range. If the converter checks out properly, the problem may be in the flowmeter, or system interconnection wiring may be defective.

The following problems can only occur if the referenced options are present:

11. "Empty Pipe" message appears on display when pipe is known to be full or does not respond when pipe empties:

* Re-verify set-up of empty pipe detector

12. Data link communication does not take place properly:

* Invoke the data link self-test after connecting the converter receive line(s) to the transmit line(s). This is a temporary connection for test purposes.
For the RS485 link, place a jumper between terminals T- and R-, and another jumper between T+ and R+.
For the RS232-C link, place a jumper between terminals TD and RD.

000353

NOTE
If the action in response to a given problem does not result in correct converter operation, it may be assumed that the converter module is defective and should be replaced.

NOTE
Replacement fuses must be the same as the original type supplied with the converter (i.e., 5x20 mm "T" type), LITTELFUSE type 218. Other type fuses may blow as power is applied.

7.3.2 Test Point Information

7.3.2.1 Analog Board

(Test point location is shown in Figure 7-1.)

TP101 = analog circuit common (same as "3" of the primary)

TP102 = reference signal (nominal +/-70 mV square wave at 1/4 or 1/8 of the power line frequency)

TP103 = multiplexed signal and reference; with signal at approximately 550 times the input level observed at input terminals "1" and "2", and the reference signal selected every hundredth measurement at 30 times input level (see TP102)

TP104 = full wave rectified reference voltage used for driver pulse width modulator control.

7.3.2.2 Digital Board (all signals are 5 volt CMOS logic level)

(Test point location is shown in Figure 7-1.)

The following points are contained in a strip near the edge of the digital board:

TP1 = digital circuit common (same as "3" of primary)

TP2 = is <u>not used</u>

TP3 = serial communication data received by 50XM1000 CPU (RXD)

TP4 = serial communication data sent by 50XM1000 CPU (TXD)

TP5 = + 5 volts dc

The following points are contained in a second group located at the perimeter of the digital board. (On the latest design, these test points are actually a row of printed circuit solder pads located along the left side of the Digital board.)

41 = 1.000 MHz crystal clock oscillator

42 = 31.250 kHz (derived from 41)

43 = comparator output of analog to digital converter (activity depends on magnitude of velocity input signal)

44 = CPU master measuring interrupt (line frequency or 1/2 line frequency depending on setting of analog board S101 or dc power clock module selected)

45 = clock burst for analog to digital converter (length of pulse train depends on magnitude of velocity input)

46 = analog multiplexer control - logical "1" only when reference voltage is to be measured

47 = CPU "reset" terminal - must be low for CPU to run

48 = CPU "ale" terminal used for memory control and generally consisting of 170 ns pulses occurring every 550 ns

49 = CPU "psen" terminal generally consisting of 250 ns pulses occurring every 550 ns

50 = not used

51 = scaled pulse output into gate array (pulse width and repetition rate are the same as at the output terminals and information is present for both flow directions)

52 = watch dog timer from gate array to CPU - the line is normally high unless a system fault is present

53 = nominal 0 - 10 kHz converter output - pulses are 32 usec wide and must be averaged for at least 100 ms due to their synthesized nature

000355

7.4 Parts List

NOTE
When specified, the HART interface module is included as part of the converter assembly along with the magnet driver and the signal/reference module, i.e., these modules are factory installed. The data link and pulse output modules are plug-in type boards and the selected assembly can be added in the field.

7.4.1 Function Modules

DESCRIPTION	PART NUMBER
+Opto Pulse Output Module	D685A432U02
+Active Pulse Output Module	CD685A290U01
+RS 232-C Data Link Interface Module	D685A287U01
+RS 485 Data Link Interface Module	D685A299U01
*Empty Pipe Detector Module	CD685A330U01
*Signal/Reference Module	CD685A487U06
*Magnet Driver Module	CD685A329U01
*HART Interface Module (Kit)	614L279U01
**LCD Assembly	177A118U02
# Analog Board (Design Level B)	
120 V ac, 50/60 Hz	CD685A371U50
Digital Board (Design Level B)	
Opto Pulse Output	CD685A372U51
Totalizer Reset	CD685A372U52
Opto Pulse and Totalizer Reset	CD685A372U53
EEPROM Board-required on all Digital Boards	D685A458U03

+ Pulse output and data link options are mutally exclusive.
* Factory Installed.
** Requires unsoldering 2 wires to remove LCD from Digital Board. Polarity must be observed.
# Analog PCB does not include HART Interface Module. See Section 7.4.2.

000356

7.4.2 Signal Converter Assembly (120 V ac/24 V dc)

FEATURES	ADDITIONAL MODULE	SIGNAL CONVERTER 120 V ac	SIGNAL CONVERTER 24 V dc (15 Hz)
Without Empty Pipe Detector		CD674A254U50	D674A279U32
Empty Pipe Detector		CD674A254U51	CD674A254U61
Empty Pipe Detector and RS232-C Data Link	D685A287U01	CD674A254U51	CD674A254U61
Empty Pipe Detector and RS485 Data Link	D685A299U01	CD674A254U51	CD674A254U61
Active Scaled Pulse and Empty Pipe Detector	CD685A290U01	CD674A254U51	CD674A254U61
Opto Coupled Pulse Output		CD674A254U52	CD674A254U62
Opto Coupled Pulse Output and Empty Pipe Detector		CD674A254U53	CD674A254U63
Totalizer Reset		CD674A254U54	CD674A254U64
Totalizer Reset and Empty Pipe Detector		CD674A254U55	CD674A254U65
Opto Coupled Pulse Output, Totalizer Reset		CD674A254U56	CD674A254U66
Opto Coupled Pulse Output, Totalizer Reset and Empty Pipe Detector		CD674A254U57	CD674A254U67
HART Protocol and Empty Pipe Detector	614L279U01	CD674A254U51	CD674A254U61
HART Protocol, External Totalizer Reset and Empty Pipe Detector	614L279U01	CD674A254U55	CD674A254U65
HART Protocol, Empty Pipe Detector and Scaled Pulse	614L279U01 CD685A290U01	CD674A254U51	CD674A254U61

7.4.3 Signal Converter Fuse Replacement

SYMBOL	PC ASSEMBLY	DESCRIPTION	PART NUMBER
F101	Analog Board 110/120 V	250 V, 0.25 A 5X20 mm "T" type, LITTELFUSE Type 218	D151B001U03
	Analog Board 220/240 V	250 V, 0.125 A 5X20 mm "T" type, LITTELFUSE Type 218	D151B001U08
	Analog Board 24 V dc	250 V, 1.25 A 5X20 mm "T" type, LITTELFUSE Type 218	151B001U16

7.4.4 Signal Converter Assembly (100/110 V ac, 220 V ac, 240 V ac)

DESCRIPTION	PART NUMBER
100/110 V ac Signal Converter without Options	698B215U01
220 V ac Signal Converter without Options	698B215U02
240 V ac Signal Converter without Options	698B215U03

000358

7.4.5 Compatibility Guide

1.The following printed circuit assemblies may be used with any series 50XM1000 Signal Converter without regard to design level:

Digital Board
LCD Display
Empty Pipe Detector Module
Active Pulse Output Module
RS232-C Data Link Module
RS485 Data Link Module
Magnet Driver (part of Analog Board)

2. The following modules must only be used with devices of their particular design level:

Analog Board (includes magnet driver and signal/reference module)

Signal/Reference Assembly (part of Analog Board).

NOTE
Recalibration may be necessary when analog or digital boards are replaced in the field. Always verify correct calibration as outlined in Section 5.0.

3. Identification of Analog and Digital Boards of design levels A and B

a)The analog boards are most easily distinguished by the presence of a separate Input Signal module in design level A. This module is adjacent to the signal/reference assembly and nearest to the board edge. These input modules are ceramic, approximately l/2 inch high, and 2 inch long. design level B Analog boards contain only the signal/reference module in this area.

b)The most easily distinguished features of the design level B digital boards are the presence of the "Start in English" jumper and a plastic encased surface mounted 11.059 MHz oscillator. The jumper appears between the LM317 Voltage Regulator (N201) and the standoff along the same edge as the fuse and ribbon cable connector. Design Level A boards did not have a "Start in English" jumper and used a metal encased 11.059 MHz oscillator.

4. EPROM Replacement

This memory chip is factory programmed and installed as component D203 on the digital board. The EPROM is socket mounted and can be replaced in the field by an exact replacement part. The component part number is printed on the top of the EPROM. The part number may change with design level of the digital board and/or the applicable firmware requirement.

000359

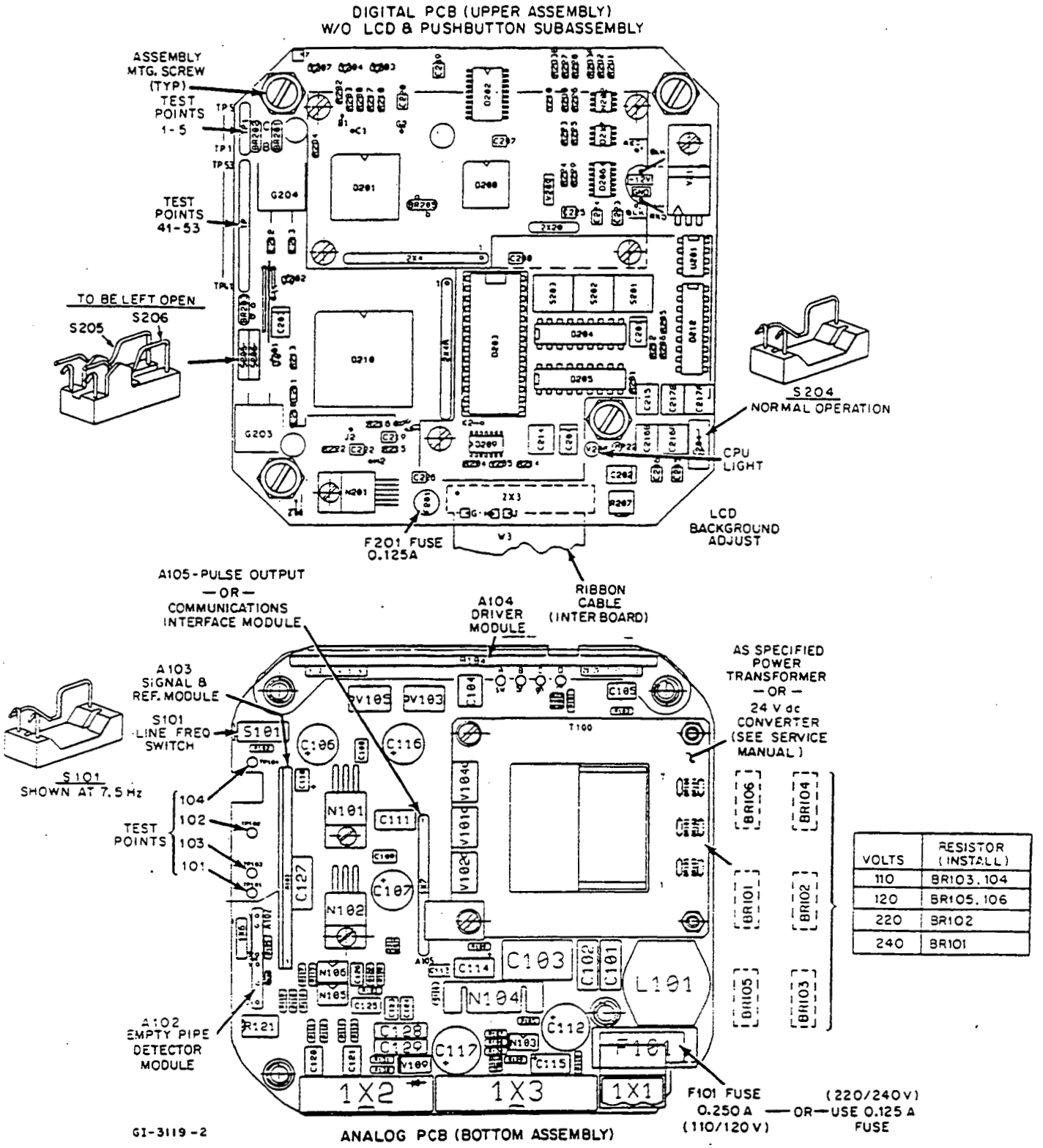

VOLTS	RESISTOR (INSTALL)
110	BR103, 104
120	BR105, 106
220	BR102
240	BR101

FIGURE 7-1. LAYOUT, ANALOG AND DIGITAL PC ASSEMBLIES

000360

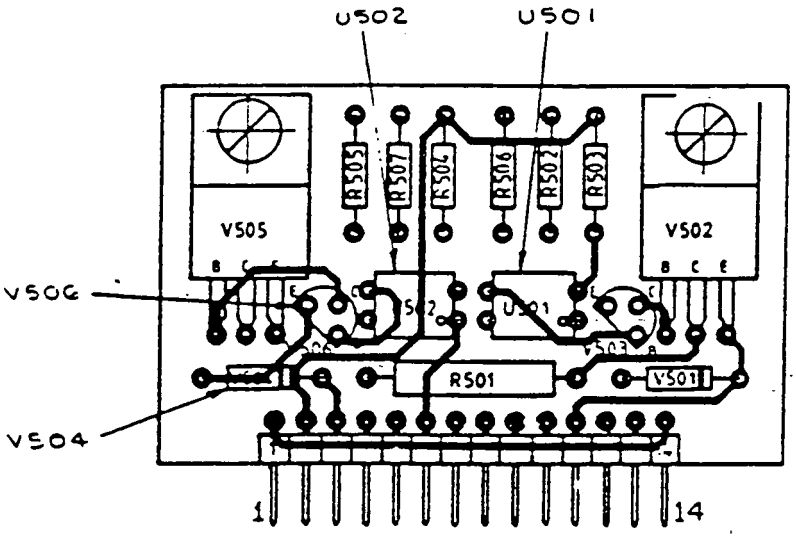

FIGURE 7-2. LAYOUT, PULSE OUTPUT MODULE (A105)

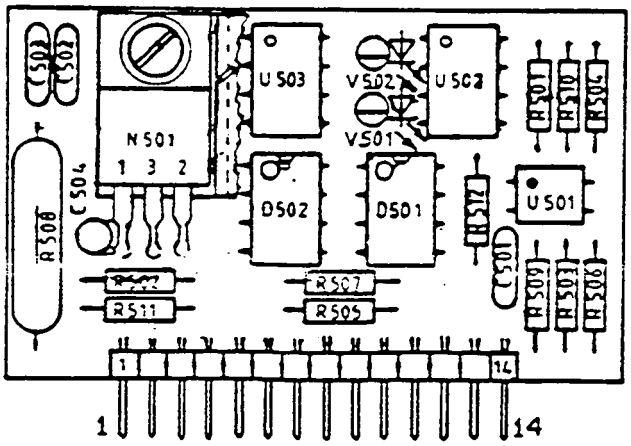

FIGURE 7-3. LAYOUT, RS485 DATA LINK MODULE (A105)

000361

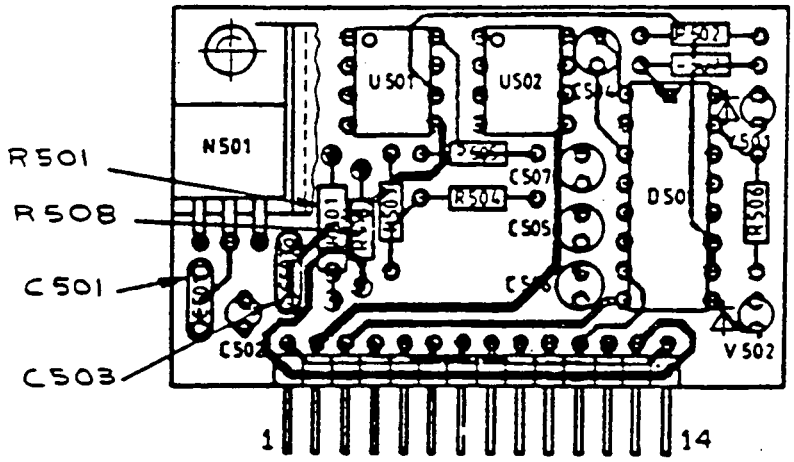

FIGURE 7-4. LAYOUT, RS232-C DATA LINK MODULE (A105)

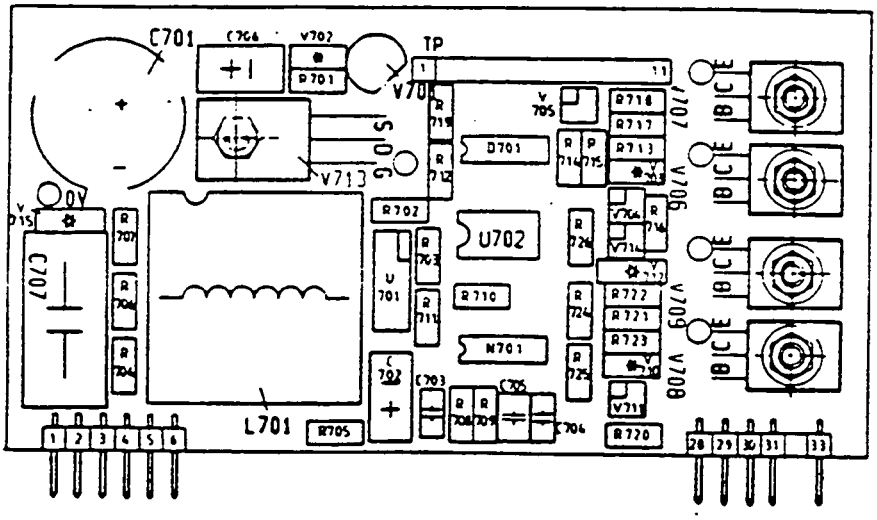

FIGURE 7-5. LAYOUT, DRIVER MODULE (A104)

000362

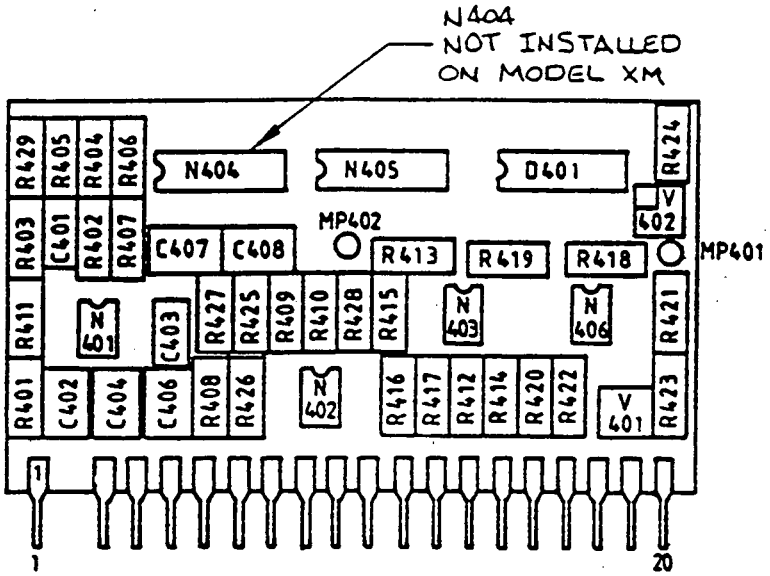

FIGURE 7-6. LAYOUT, SIGNAL AND REFERENCE MODULE (A103)

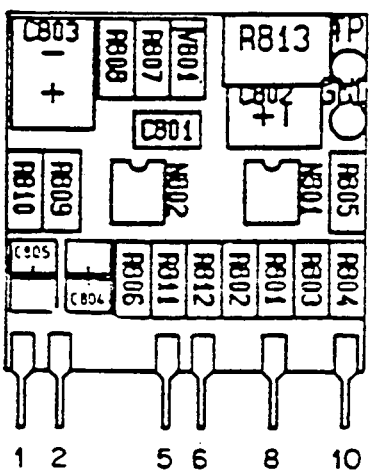

FIGURE 7-7. LAYOUT, EMPTY PIPE DETECTOR MODULE (A102)

000363

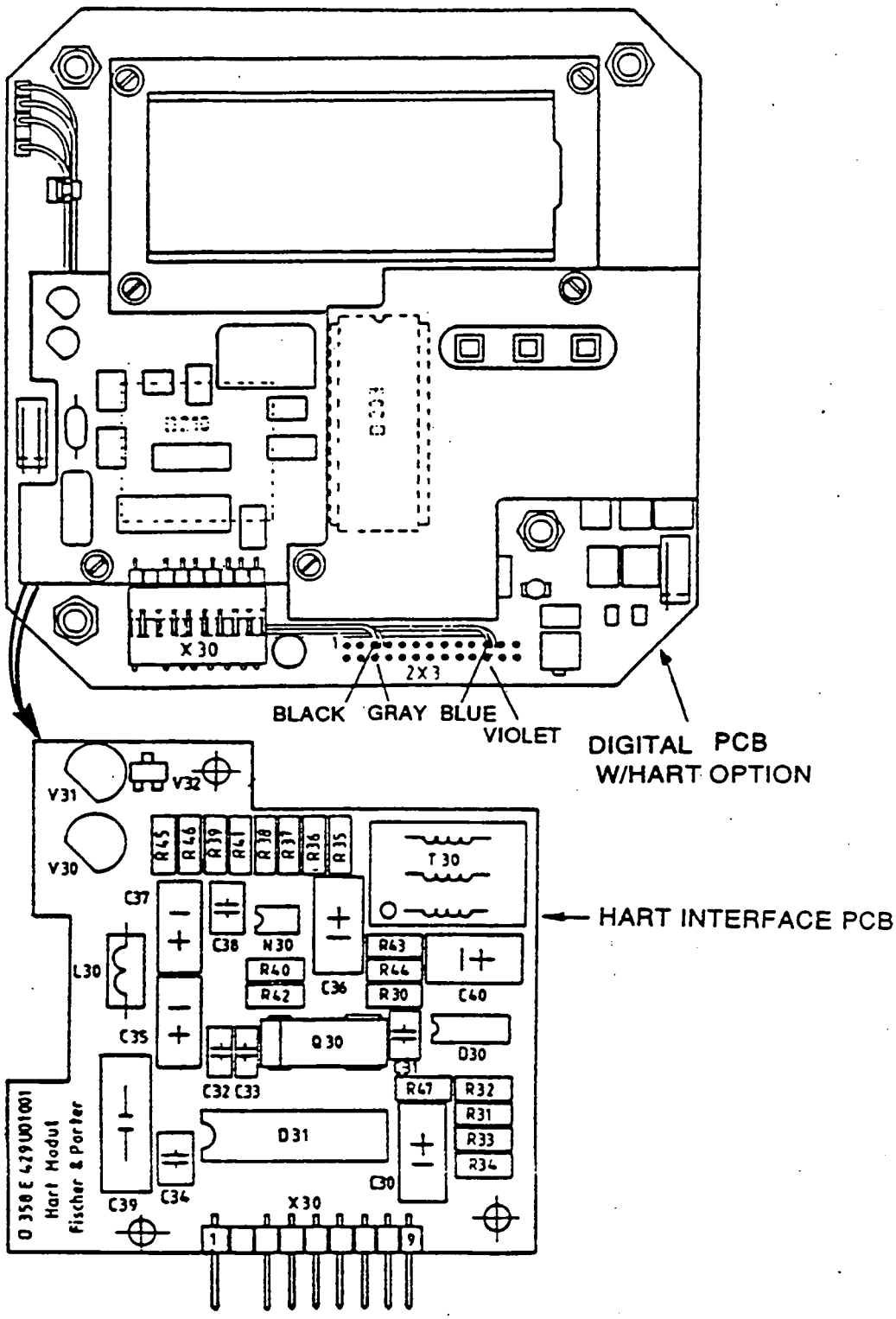

FIGURE 7-8. LAYOUT, DIGITAL BOARD WITH HART INTERFACE MODULE

000364

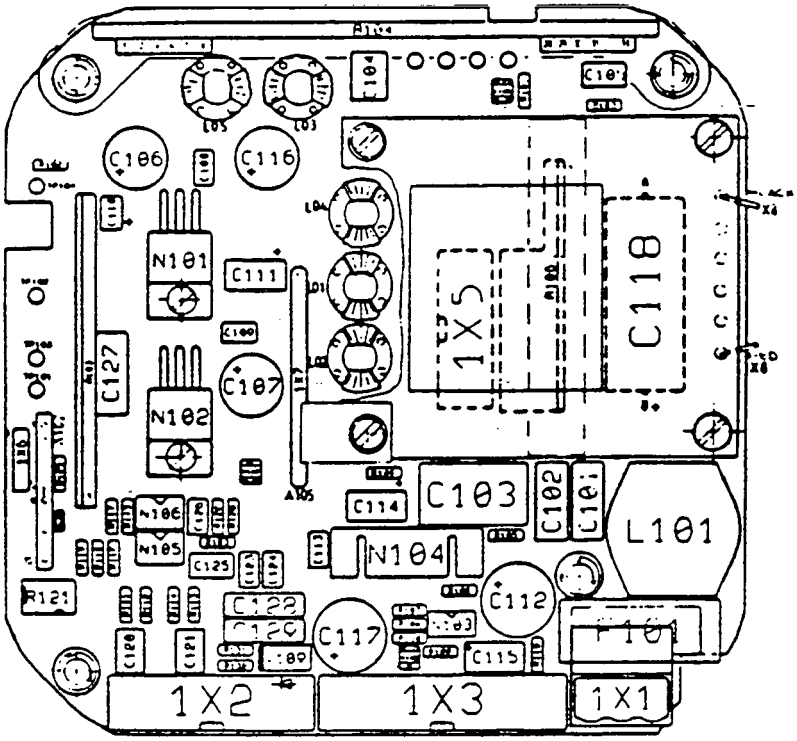

A. ANALOG BOARD W/dc CONVERTER

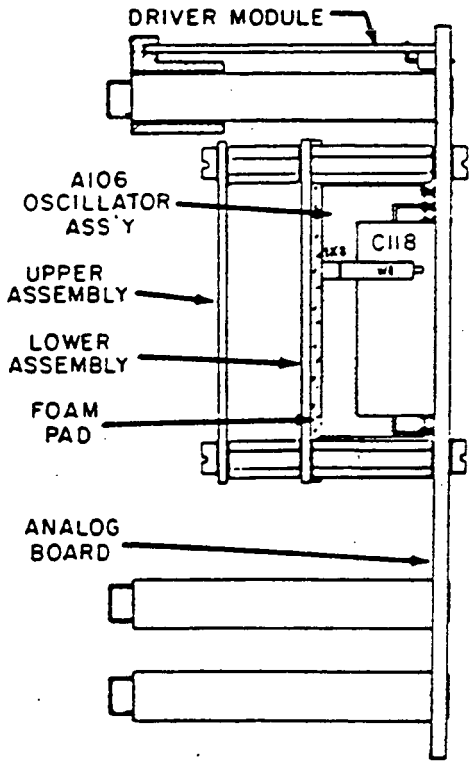

B. ASSEMBLY DETAIL

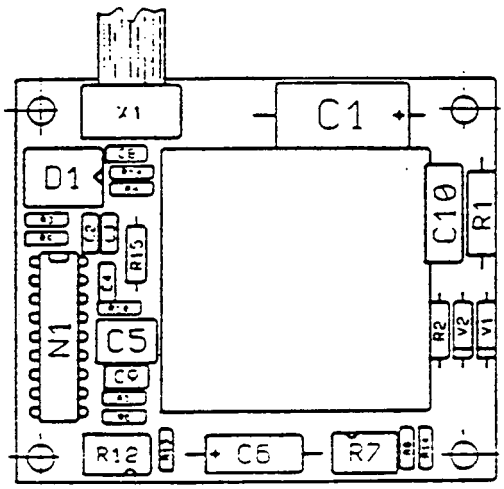

C. LAYOUT, DC-DC CONVERTER (UPPER PC ASSEMBLY)

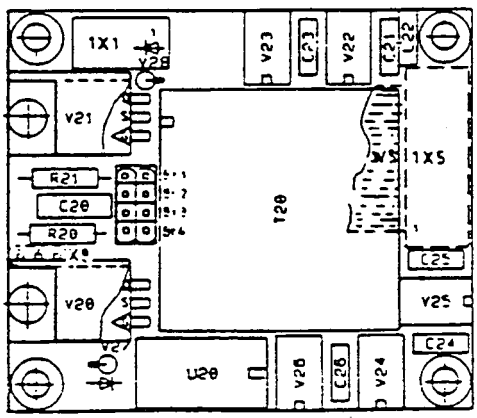

D. LAYOUT DC-DC CONVERTER (LOWER PC ASSEMBLY)

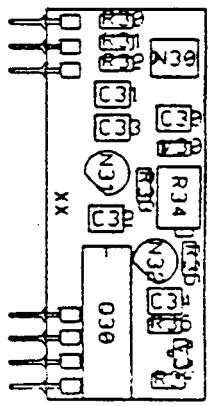

E. LAYOUT OSCILLATOR ASSEMBLY

SI-6885

FIGURE 7-9. LAYOUT, DC/DC CONVERTER ASSEMBLY

7412

DOCUMENTATION QUESTIONNAIRE

Your answers to the questions below and other comments assist us in publishing better documentation. If an answer requires explanation please use space provided. All comments and suggestions become the property of Fischer & Porter Co.

1. Title of Document? INSTRUCTION BULLETIN 50XM1000B REV.1 PN 24584

2. Does this document meet your needs? _____

3. Is the information: _____

   Easily understandable? _____

   Properly organized? _____

   Complete? _____

   Sufficiently illustrated? _____

OTHER COMMENTS

(Please include page and/or figure number.)

_____

Name _____

Address _____

No postage necessary if mailed in U.S.A.

If F&P employee, please include department number.

DETACH, FOLD, STAPLE

FORM NO 265-304

000366

FOLD 1

NO POSTAGE
NECESSARY
IF MAILED
IN THE
UNITED STATES

BUSINESS REPLY MAIL

FIRST CLASS PERMIT NO 86 WARMINSTER, PA

POSTAGE WILL BE PAID BY ADDRESSEE:

FISCHER & PORTER COMPANY
DEPT. 265
125 E. COUNTY LINE ROAD
WARMINSTER, PA 18974

FOLD 2

000367

STAPLE HERE

7412

Our more than 6,000 professionals worldwide are ready to meet your needs for Strategic Enterprise Management...

Bailey

BAILEY FISCHER PORTER

TBI-Bailey

etsi

NMTI

Australia
Bailey–Fischer & Porter
Regents Park, NSW
Telephone: 61-2-645-3322
Telefax: 61-2-645-2212

Belgium
Fischer & Porter NV
Wilrijk
Telephone: 32-3-828-05-11
Telefax: 32-3-827-87-28

Brazil
Bailey do Brasil
Sao Paulo
Telephone: 55-11-548-4122
Telefax: 55-11-547-0315

Canada
Elsag Bailey (Canada), Inc.
Burlington, Ontario
Telephone: 1-905-639-8840
Telefax: 1-905-639-8639

Fischer & Porter (Canada) Ltd.
Downsview, Ontario
Telephone: 1-416-667-9800
Telefax: 1-416-667-8469

China
Bailey Beijing Controls
Beijing
Telephone: 86-1-401-0651
Telefax: 86-1-401-1643

Finland
Fischer & Porter Oy
Espoo
Telephone: 358-0-859-3133
Telefax: 358-0-859-3324

France
Elsag Bailey SA
Massy
Telephone: 33-1-64-47-2000
Telefax: 33-1-64-47-2016

Otic-Fischer & Porter
Clermont-Ferrand
Telephone: 33-73-93-84-10
Telefax: 33-73-93-03-65

Germany
Bailey–F & P Automation
Overath
Telephone: 49-220-473-90
Telefax: 49-220-473-979

Germany
Bailey–Fischer & Porter
Göttingen
Telephone: 49-551-905-0
Telefax: 49-551-905-777

Italy
Elsag Bailey
Genoa
Telephone: 39-10-658-2-944
Telefax: 39-10-658-2-941

Fischer & Porter Italiana
Milan
Telephone: 39-2-92771
Telefax: 39-2-9231257

Japan
Bailey Japan Company, Ltd.
Tagata-Gun, Shizuoka-Ken
Telephone: 81-559-49-3311
Telefax: 81-559-49-1114

Jordan
Bailey Controls Jordan
Amman
Telephone: 962-6-756-908
Telefax: 962-6-756-908

Mexico
Bailey–Fischer & Porter
Naucalpan
Telephone: 52-5-557-6100
Telefax: 52-5-557-7022

Netherlands
Bailey–Fischer & Porter
Gorinchem
Telephone: 31-1830-34811
Telefax: 31-1830-30285

Norway
Bailey Petrovest AS
Bergen
Telephone: 47-55-229-601
Telefax: 47-55-229-610

Russia
Bailey Avtomatizatsija
Moscow
Telephone: 7-095-973-3664
Telefax: 7-095-973-2317

Singapore
Elsag Bailey Pte. Ltd.
Singapore
Telephone: 65-442-3200
Telefax: 65-442-2700

Spain
Fischer & Porter España
Madrid
Telephone: 34-1-415-2200
Telefax: 34-1-415-3950

Sweden
Fischer & Porter AB
Stockholm
Telephone: 46-8-23-42-15
Telefax: 46-8-641-91-25

United Kingdom
Bailey ICS plc
Telford, Shropshire
Telephone: 44-952-670-477
Telefax: 44-952-670-455

Fischer & Porter Ltd.
Workington, Cumbria
Telephone: 44-946-830611
Telefax: 44-946-833003

United States
Bailey Controls Company
Wickliffe, Ohio
Telephone: 1-216-585-8500
Telefax: 1-216-585-8756

Bailey–Fischer & Porter Co.
Warminster, Pennsylvania
Telephone: 1-215-674-6000
Telefax: 1-215-674-7183

Venezuela
Bailey de Venezuela SA
Valencia
Telephone: 58-14-405-138
Telefax: 58-41-322-994

Turbine Control Systems
Electronic Technology Systems, Inc.
New Kensington, Pennsylvania USA
Telephone: 1-412-335-1300
Telefax: 1-412-335-2450

Energy Management & SCADA Systems
Network Management Technology, Inc.
Sugar Land, Texas USA
Telephone: 1-713-274-5000
Telefax: 1-713-240-6986

Liquid Analysis Products
TBI–Bailey Controls
Carson City, Nevada (USA)
Telephone: 1-702-883-4366
Telefax: 1-702-883-4373

1000 Printed in USA 0295 APG
Copyright © 1995 by Elsag Bailey Process Automation
® Registered Trademark of Elsag Bailey Process Automation
™ Trademark of Elsag Bailey Process Automation

Elsag Bailey
Process Automation

000368

FISCHER & PORTER

ADDENDUM TO MAGNETIC FLOWMETER
AND SIGNAL CONVERTER
INSTRUCTION BULLETINS

The following information is applicable to all F&P Magnetic Flowmeters and Signal Converters supplied after March 1992. These products are provided with NEMA 4X finishes.

Read and Save this information

NEMA 4X, Corrosion Resistant Finish

The NEMA 4X rating applies to the meter body and electronics enclosure only. The following accessories (if supplied) may not meet NEMA 4X unless specifically ordered as NEMA 4X:

- meter flanges
- meter installation hardware: studs, nuts, bolts
- enclosure mounting hardware for pipe or wall mounting
- conduit hardware

This product is painted with a high performance epoxy paint. The corrosion protection provided by this finish is only effective if the finish is unbroken. It is the users' responsibility to "touch-up" any damage that has occurred to the finish during shipping or installation of the product. Special attention must be given to: meter flange bolting, pipe mounting of electronics, conduit entries and covers that are removed to facilitate installation or repair. For continued corrosion protection throughout the product life, it is the users' responsibility to maintain the product finish. Incidental scratches and other finish damage must be repaired and promptly re-painted with approved touch-up paint. Provide the model number and size of your product to the nearest Fischer & Porter representative to obtain the correct touch-up paint.

This Addendum supplements the following Model Numbers:

10D1430	10D1465	10D1476	50CD9001	50SF2000
10D1435	10D1472	10D1477	50PZ1000	50SM1000
10D1462	10D1475	10DX3011	50SD1000	50XM1000

Pub. No. 24438

Copyright 1992 Fischer & Porter Company. [June 1992]

ADDENDUM TO MAGNETIC FLOWMETER INSTRUCTION BULLETINS 50XM1000 AND 50XO1000

The purpose of this addendum is to supply additional information when using the 50XM1000 and 50XO1000 Signal Converters with the 10DX2112 Flowmeter.

When the 50XM1000 Signal Converter is supplied with the 10DX2112 Flowmeter the applicable interconnection diagram to use is Figure 2-5 in the 50XM1000 Instruction Bulletin.

When the 50XO1000 Signal Converter is supplied with the 10DX2112 Flowmeter the applicable interconnection diagram to use is Figure 2-3 in the 50XO1000 Instruction Bulletin.

PN 24618

[Supplements PN 24584 and PN 24422A]

Copyright 1993 Fischer & Porter Company. [December 1993]

APPENDIX D

SAMPLE COPY OF MWI PCP-100

REPRINT

7412

ZQ2810B RL-5.1 WORK ORDER JOB PLAN RUN DATE: 07/26/95 08:54 PAGE 1
DATABASE: 1 PRODUCTION DATABASE
PLANT: F CMMS PLUS - FERMCO

SELECTION CRITERIA - WORK ORDER: PCP100 -00-00 PRINT BARCODES? N

WORK ORDER : PCP100 -00-00 AREA: MPLAN DEPT: MPLAN ST: 20 PRI: 3P
PLANNER : PM CLS: 161 SUPV: SUP REQ BY: PM
ASSIGN TO : EQUIP U/D: U DOWN HRS: .0 SHOP:
EQUIP AVAIL : WO ACCOUNT: 99999-999 QA: 4
REQ COMPL DATE: 01/01/01 SHUTDOWN: CAPITAL EXPENSE:

EQUIP NO: PM-EQUIP PSEUDO NUMBER FOR MASTER PLAN WORK ORDER
SPECIFICATIONS: PSEUDO NUMBER FOR MASTER PLAN WORK ORDERS ONLY

WORK ORDER DESC: INSPECTION OF SUMP PUMPS

PERMITS REQUIRED: DELIVERY
AREA DATE TIME

SKILLS:

SKILL	MEN	MAN HRS
0022	1	.60
0050	1	2.00
TOTAL MANHOURS		2.60

MATERIALS:

STOCK NUMBER	DESCRIPTION	REPAIR	RSVD QTY	PLN QTY	OPTNL PART

TOOLS:

DESCRIPTION	QUANTITY

RELEASE WORK
FACILITY OWNER: _____
DATE: _____
COMPLETION
MAINT SUPV: _____
DATE: _____
FACILITY OWNER: _____
DATE: _____

SPECIAL/SAFETY INSTRUCTIONS:

PCP100

WORK ORDER NO: PCP100 -00-00 DESC: INSPECTION OF SUMP PUMPS
EQUIPMENT NO: PM-EQUIP DESC: PSEUDO NUMBER FOR MASTER PLAN WORK ORDER

SPECIAL/SAFETY INSTRUCTIONS:

STEP 1 THE MAINTENANCE SUPERVISOR SHALL INFORM THE FACILITY OWNER OF SCHEDULED PREVENTIVE MAINTENANCE ACTIVITIES.
STEP 2 THE FACILITIES OWNER SHALL SIGN THE WORK ORDER TO RELEASE THE EQUIPMENT FOR WORK. THE MAINTENANCE SUPERVISOR IS RESPONSIBLE FOR DETERMINING WHAT WORK PERMITS ARE REQUIRED AND IS RESPONSIBLE FOR OBTAINING THEM.
STEP 3 VISUALLY INSPECT THE SUMP PUMP IN OPERATION, MANUALLY TRIP FLOAT SWITCH IF NECESSARY TO OPERATE PUMP (DO NOT OPERATE DRY). RECORD INSPECTION RESULTS ON CHECK SHEET MECH PMP-114.
STEP 4 CHECK FOR EXCESSIVE VIBRATION. DAMAGE TO THE CASING OR FLANGES, MISSING OR BROKEN BOLTS OR NUTS. LEAKAGE AT THE FLANGES OR PACKING GLAND.
STEP 5
STEP 5 IF PACKING GLAND LEAKS EXCESSIVELY ATTEMPT TO REDUCE LEAKAGE BY TIGHTENING FOLLOWER NUTS. IF THIS FAILS LOCK OUT THE PUMP PER LOCK AND TAG PROCEDURE FMPC-719 AND ADD A RING OF PACKING. UNLOCK THE POWER AND RE-TEST THE PACKING SEAL TIGHTENING AS NEEDED. IF THIS IS NOT SUCESSFUL LOCK OUT AND REPACK THE PUMP.
NOTE: AFTER REMOVING THE OLD PACKING INSPECT THE CONDITION OF THE SHAFT OR SLEEVE IN THE GLAND AREA. REPACKING IS NOT RECOMMENDED IF THE SHAFT OR SLEEVE IS DAMAGED. SHAFT OR SLEEVE REPLACEMENT OR REPAIR SHOULD BE DONE ON A CORRECTIVE MAINTENANCE WORK ORDER
STEP 6
STEP 6 UNLOCK THE PUMP AND TEST RUN IT. COMPLETE THE CHECK SHEET NOTING ANY UNUSUAL CONDITIONS FOUND AND REPAIRS MADE.
STEP 7 COMPLETE THE WORK ORDER AND RECORD ANY UNUSUAL PROBLEMS.
NOTE: THE FACILITIES OWNER AND THE MAINTENANCE SUPERVISOR SHALL SIGN THE COMPLETED WORK ORDER.

7412

ZQ2810B RL-5.1 WORK ORDER JOB PLAN RUN DATE: 07/26/95 08:54 PAGE 3
DATABASE: 1 PRODUCTION DATABASE
PLANT: F CMMS PLUS - FERMCO

WORK ORDER NO: PCP100 -00-00 DESC: INSPECTION OF SUMP PUMPS
EQUIPMENT NO: PM-EQUIP DESC: PSEUDO NUMBER FOR MASTER PLAN WORK ORDER

JOB OK - PRODUCTION _____ DATE _____

JOB OK - MAINTENANCE _____ DATE _____

REPAIR REMARKS _____

_____

FAILURE (Y/N): _____ PROD HRS LOST: _____ NEW SERIAL NO: _____

COMPONENTS	CONDITIONS	ACTIONS
		01 REPAIR
		02 REMOVE
		03 ADJUST
		04 ALIGN
		05 CALIBRATE

CRITIQUE FOR WORK ORDER NO. _____

HOURS PLANNED: _____ ACTUAL HOURS WORKED: _____

THIS JOB RAN OVER/UNDER (CIRCLE ONE) THE ESTIMATED HOURS BECAUSE: _____

_____

_____

_____

Attachment IV

ATTACHMENT IV

ACCEPTANCE DOCUMENTS

7412

CONDITIONAL/FINAL ACCEPTANCE

[✓] CONDITIONAL ACCEPTANCE [ ] FINAL ACCEPTANCE/TURNOVER	[ ] SUBCONTRACTOR TO CONSTRUCTION [X] CONSTRUCTION TO FACILITY/SYSTEM OWNER [ ] CONSTRUCTION TO START-UP [ ] CONSTRUCTION TO _____

PROJECT NO.:	PROJECT TITLE:	DATE:
2BSC1	RH 30: Sediment Removal & Seepage Collection	8/17/95

This documents the turnover and acceptance by FERMCO (Construction or Facility/System Owner or Start-up) of equipment and/or systems listed below as being complete in accordance with the established project specification. Upon signature of this document the group accepting the system/facility understands that they are required to perform all duties (lock & tag, maintenance, etc.) associated with being the Facility/System Owner and that all unfinished work listed in the exceptions section will be completed under direction of the receiving group

DESCRIPTION OF TURNOVER PACKAGE AND/OR ITEM(s):

Seepage Collection Pumps @ East & West Pump Sta., Controls, Power Supply and Flow Meter @ Metering Manhole.

EXCEPTIONS TO THE ABOVE SCOPE (CONDITIONAL RELEASE):

Misc. Punchlist items

SIGNATURES REQUIRED

Release of Subcontractor	Release of Construction Division
RELEASED BY SUBCONTRACTOR: N/A DATE:	RELEASED BY CONS. DEPT. MANAGER: T. Daugherty for D.W. Hooper DATE: 8/17/95
ACCEPTED BY CDM: T. Daugherty for D.W. Hooper DATE: 8/17/95	ACCEPTED BY START-UP: DATE:
ACCEPTED BY QIS: DATE:	ACCEPTED BY FACILITY/SYSTEM OWNER: James C. Jenkins DATE: 8/17/95
ACCEPTED BY FACILITY/SYSTEM OWNER: James C. Jenkins DATE: 8/17/95	

(QE:004:05/10/94)

xcy: W. Hooper
T. Daugherty
V. Kumthekar
J. Jenkins

000376

CONDITIONAL/FINAL ACCEPTANCE

[ ] CONDITIONAL ACCEPTANCE	[ ] SUBCONTRACTOR TO CONSTRUCTION
[X] FINAL ACCEPTANCE/TURNOVER	[X] CONSTRUCTION TO FACILITY/SYSTEM OWNER
	[ ] CONSTRUCTION TO START-UP
	[ ] CONSTRUCTION TO _____

PROJECT NO.:	PROJECT TITLE:	DATE:
w.o. 1650 / 28SC1	RA 3c Sediment Removal & Seepage Control	10-9-95

This documents the turnover and acceptance by FERMCO (Construction or Facility/System Owner or Start-up) of equipment and/or systems listed below as being complete in accordance with the established project specification. Upon signature of this document the group accepting the system/facility understands that they are required to perform all duties (lock & tag, maintenance, etc.) associated with being the Facility/System Owner and that all unfinished work listed in the exceptions section will be completed under direction of the receiving group.

DESCRIPTION OF TURNOVER PACKAGE AND/OR ITEM(s):

Seepage Collection Pumps, etc. – All Punchlist Items Complete.

EXCEPTIONS TO THE ABOVE SCOPE (CONDITIONAL RELEASE):

None

SIGNATURES REQUIRED

Release of Subcontractor N/A	Release of Construction Division
RELEASED BY SUBCONTRACTOR: DATE:	RELEASED BY CONS. DEPT. MANAGER: DATE: W Vaughn for D.W. Hooper 10/9/95
ACCEPTED BY CDM: DATE:	ACCEPTED BY START-UP: DATE: A Kumthekar 10/10/95
ACCEPTED BY QIS: DATE:	ACCEPTED BY FACILITY/SYSTEM OWNER: DATE: James W. Leslie 10/10/95
ACCEPTED BY FACILITY/SYSTEM OWNER: DATE:	

(CE:004:05/10/94)

ATTACHMENT V

AS BUILT DRAWINGS

UNITED STATES DEPARTMENT OF ENERGY

FERNALD ENVIRONMENTAL MANAGEMENT PROJECT

SEEPAGE COLLECTION AND REMOVAL OF SEDIMENT AT THE SOUTHFIELD AND INACTIVE FLYASH PILE

REMOVAL ACTION NO. 30

OPERABLE UNIT 2 - PROJECT ORDER 139

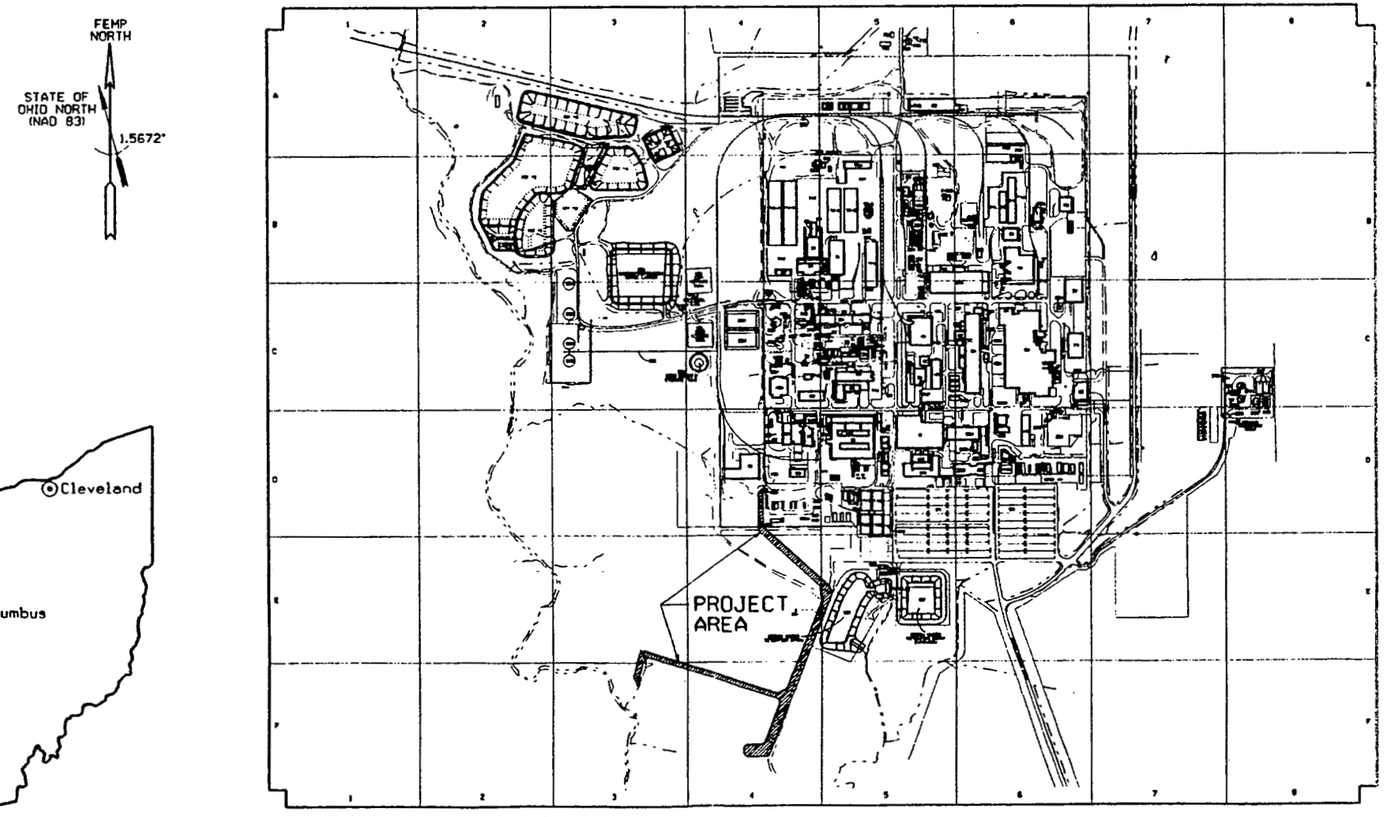

PARSONS

The Ralph M. Parsons Company • Parsons Main, Inc. • Engineering-Science, Inc.

ARCHITECTS - ENGINEERS
CINCINNATI, OHIO

NOTES

1. FOR DRAWING INDEX, SEE DRAWING 92X-5900-X-00140.

7412

REF DWG NO.	DRAWING TITLE
92X-5900-X-00140	DRAWING INDEX

000379

REV. NO.	ISSUE OR REVISION PURPOSE - DESCRIPTION	A-E	FERNCO	DATE
1	NO AS-BUILT CHANGES		N/A	
0	CERTIFIED FOR CONSTRUCTION	HH 04/13/95	STG 04/19/95	

INITIALS AND DATE

UNITED STATES DEPARTMENT OF ENERGY
FERNALD ENVIRONMENTAL MANAGEMENT PROJECT

THIS DRAWING PREPARED BY
PARSONS
THE RALPH M. PARSONS CO. - PARSONS MAIN, INC. - ENGINEERING-SCIENCE, INC.
CINCINNATI, OHIO

PROJECT NAME
SEEPAGE COLLECTION & REMOVAL OF SEDIMENT
REMOVAL ACTION NO. 30

DRAWING TITLE
PROJECT TITLE SHEET

DRAWN BY	DATE	LEAD ENGINEER	DATE	CHECKED BY	DATE
K.L. RABBITT	03/08/95	ED J. KUBRIN	04/12/95	K. GERARD	03/17/95

PLANT/BLDG NO.	FLOOR	SCALE	CLASS
		NONE	

SUBMITTED FOR APPROVAL	FERNCO DEL APPROVAL
H. HUME 04/13/95	STEPHEN T. GARLAND 04/19/95

PROJECT ORDER NUMBER / PROJECT ORDER NUMBER	DOE PROJECT NO.	TEMP PROJECT NO.	DRAWING INDEX CODE NO.	SHEET NO.	REV. NO.
CRU2/P0139	V-1	WBS 1.1.1.1.2.2.6 00-90701	92X-5900-X-00139	X0001	1

INDEX OF DRAWINGS

INDEX CODE NO.	DRAWING NO.	SHEET NO.	REVISION NO.	DRAWING TITLE	REMARKS
	92X-5900-X-00139	X0001	1	PROJECT TITLE SHEET	
	92X-5900-X-00140	X0002	1	DRAWING INDEX	
	92X-5900-X-00141	X0003	1	LEGEND AND SYMBOLS	
	92X-5900-G-00125	G0001	1	CIVIL - MASTER SITE PLAN	
	92X-5900-G-00164	G0002	1	CIVIL - PIPELINE PLAN - EFFLUENT LINE AT AWWT	
	92X-5900-G-00133	G0003	1	CIVIL - PIPELINE PLAN - EFFLUENT LINE SOUTH FIELD (SF) AND INACTIVE FLY ASH PILE (IFP)	
	92X-5900-G-00135	G0004	1	CIVIL - GRADING PLAN - EAST PUMP STATION	
	92X-5900-G-00136	G0005	1	CIVIL - GRADING PLAN - WEST PUMP STATION	
	92X-5900-G-00134	G0006	1	CIVIL - SITE DETAILS - PUMP STATIONS	
	92X-5900-G-00137	G0007	1	CIVIL - SITE DETAILS - GENERAL	
	92X-5900-G-00163	G0008	1	CIVIL - SITE DETAILS - CLEANOUT MANHOLE	
	92X-5900-G-00173	G0009	1	CIVIL - SPECIFICATIONS	
	92X-5900-P-00145	P0001	1	PIPING / PLANT DESIGN - PIPE SUPPORTS - PLAN AND DETAILS	
	92X-5900-E-00120	E0001	1	ELECTRICAL - PLAN - PROJECT SITE PLAN	
	92X-5900-E-00121	E0002	1	ELECTRICAL - PLANS - EAST & WEST PUMP STATIONS AND AWWT TANK 155	
	92X-5900-E-00122	E0003	1	ELECTRICAL - SCHEMATIC, ELEVATIONS, AND DETAILS - EAST AND WEST PUMP STATIONS	
	92X-5900-E-00123	E0004	1	ELECTRICAL - ELECTRICAL DETAILS	
	92X-5900-E-00124	E0005	1	ELECTRICAL - ELECTRICAL INSTALLATION NOTES AND EQUIPMENT DESCRIPTIONS/SPECIFICATIONS	
	92X-5900-N-00143	M0001	1	MECHANICAL PROCESS - PIPING AND INSTRUMENTATION DIAGRAM - SOUTH FIELD AND INACTIVE FLY ASH PILE SEEPAGE COLLECTION SYSTEM	
	92X-5900-N-00142	M0002	1	MECHANICAL PROCESS - PIPING AND INSTRUMENTATION DIAGRAM - SYMBOLS AND LEGEND SHEET	
	92X-5900-N-00172	M0003	1	INSTRUMENTATION - FLOW METER LOOP, AND MISCELLANEOUS DETAILS	

NOTES

7412

000380

REV. NO.	ISSUE OR REVISION PURPOSE - DESCRIPTION	A-E	FERNCO	DATE
		INITIALS AND DATE		
1	DRAWING REVISED PER AS BUILT CONDITIONS FROM DRAWINGS FURNISHED BY FERNCO		N/A	
0	CERTIFIED FOR CONSTRUCTION	HH 04/13/95	STG 04/19/95	

UNITED STATES DEPARTMENT OF ENERGY
FERNALD ENVIRONMENTAL MANAGEMENT PROJECT

THIS DRAWING PREPARED BY
PARSONS
THE RALPH M. PARSONS CO. - PARSONS MAIN, INC. - ENGINEERING-SCIENCE, INC.
CINCINNATI, OHIO

PROJECT NAME
SEEPAGE COLLECTION & REMOVAL OF SEDIMENT
REMOVAL ACTION NO. 30

DRAWING TITLE
DRAWING INDEX

DRAWN BY	DATE	LEAD ENGINEER	DATE	CHECKED BY	DATE
K.L. RABBITT	03/08/95	ED J. KUBRIN	04/12/95	K. GERARD	03/17/95

PLANT/BLDG NO.	FLOOR	SCALE	CLASS
		NONE	

SUBMITTED FOR APPROVAL	FERNCO CRU APPROVAL
H. HUME 04/13/95	STEPHEN T. GARLAND 04/19/95

PROJECT ORDER NUMBER	DOE PROJECT NO.	FERNCO PROJECT NO.	DRAWING INDEX CODE NO.	SHEET NO.	REV. NO.
CRU2/P0139	V-2	WBS 1.1.1.1.2.2.6 00-90701	92X-5900-X-00140	X0002	1

GENERAL LEGEND

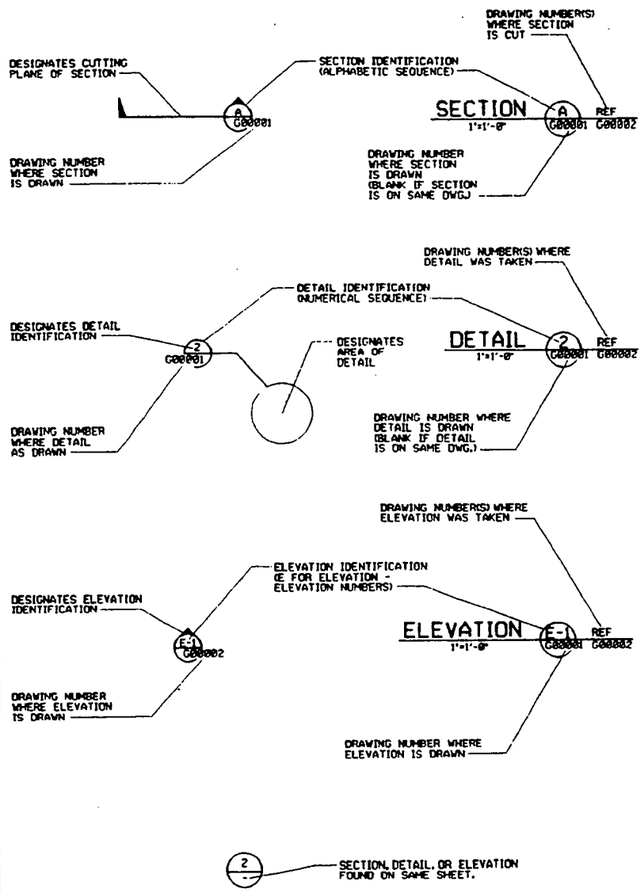

NOTE:

ABBREVIATED DRAWING NUMBERS WILL BE USED FOR ALL SECTIONS, DETAILS, ELEVATIONS, AND WITHIN NOTES AND CALL OUTS IN THE BODY OF THE DRAWING.

FOR EXAMPLE: 95X-5900-G-00002 = DRAWING NUMBER
G00002 = ABBREVIATED DRAWING NUMBER

DIMENSIONING:

DIMENSIONS AND/OR ELEVATIONS MARKED THUS (+/-) SHALL BE VERIFIED IN THE FIELD BY CONTRACTOR.

USE DIMENSIONS AS SHOWN, DO NOT SCALE.

NTS (NOT TO SCALE) IS SHOWN ONLY WHERE DIMENSION IS OBVIOUSLY OUT OF SCALE.

UTILITY SYMBOLS

EXISTING		PROPOSED
- - - ST - - -	STORM SEWER	—— ST ——
- - - SN - - -	SANITARY SEWER	—— SN ——
- - - FG - - -	FUEL GAS	—— FG ——
- - - DW - - -	DRINKING WATER	—— DW ——
- - - FO1 - - -	FIRE PROTECTION	—— FO1 ——
- - - LS - - -	LIVE STEAM	—— LS ——
- - - WS - - -	WATER SUPPLY	—— WS ——
- - - WR - - -	COOLING WATER RETURN	—— WR ——
- - - TW - - -	PROCESS WATER	—— TW ——
- - - CE - - -	CONTAMINATE WATER	—— CE ——
- - - FT - - -	FILTRATE OR EFFLUENT	—— FT ——
- - - DF - - -	DEIONIZED FEED	—— DF ——
- - - PW - - -	DEIONIZED WATER	—— PW ——
- - - BR - - -	BRINE	—— BR ——
- - - RW - - -	RAW WATER	—— RW ——
- - - A - - -	ALARM	—— A ——
- - - CN - - -	STEAM CONDENSATE	—— CN ——
- - - VE - - -	VENT LINES	—— VE ——
- - - SD - - -	SUB-SURFACE DRAINAGE	—— SD ——
- - - SL - - -	SUMP LIQUOR	—— SL ——
- - - E - - -	ELECTRICAL	—— E ——
- - - OE -◇-	OVERHEAD ELECTRICAL	—— OE —◆—
- - - T - - -	TELEPHONE	—— T ——
- - - G - - -	ELECTRIC GROUND	—— G ——
- - - PA - - -	PLANT AIR	—— PA ——
- - - SA - - -	INSTRUMENT AIR SUPPLY	—— SA ——
.....	ABANDONED	
	EFFLUENT LINE	—— WW ——

BALLOON LEGEND

- PIV — POST INDICATOR VALVE
- SMH — SANITARY MANHOLE
- EMH — ELECTRICAL MANHOLE
- TMH — TELEPHONE MANHOLE
- CB — STORM SEWER CATCH BASIN
- HFH — HIGH PRESSURE FIRE HYDRANT
- LFH — LOW PRESSURE FIRE HYDRANT

GRADING SYMBOLS

EXISTING		PROPOSED
X 584.9	SPOT ELEVATION	X 589.4
- - - 584 - - -	CONTOUR - MINOR	584
- - - 585 - - -	CONTOUR - MAJOR	585
(TOE)	SLOPE INDICATOR	(TOE)

ARCHITECTURAL LEGEND

EXISTING		PROPOSED
	DOOR NUMBER	103
	ROOM NUMBER	101

SYMBOLS LEGEND

EXISTING		PROPOSED
	POST INDICATOR VALVE (PIV)	
	FIRE HYDRANT (FH)	
	MANHOLE (MH)	Ⓢ OR Ⓓ
	CATCH BASIN (CB)	D
	LIGHT POLE	
	PIPE SUPPORT	
	ELECTRICAL MANHOLE	E
	TELEPHONE MANHOLE	T
	STREET WASHERS	
	VALVE BOX	
1313	MONITORING WELL	
	SURFACE DRAINAGE FLOW	
	POWER POLE (PP)	
	GRAVEL ROADWAY/DRIVEWAY	
	ASPHALT ROADWAY/DRIVEWAY	
	CONCRETE PAD/ ROADWAY/DRIVEWAY	
	BUILDING/TRAILER	
	RAILROAD TRACK	
	OU BOUNDARY	
	FENCE	
	TREE LINE	
	DECIDUOUS TREE	
	CONIFEROUS TREE	
	CENTERLINE DRAINAGE DITCH	
	RIVER/CREEK	
	TO BE REMOVED	
	SILT FENCE	
	ELECTRICAL TRANSFORMER	T
	TRANSMISSION TOWER	
	HEADWALL	— OR
BM	BENCH MARK	
	CONSTRUCTION/WIND BARRIER FENCE	
	SIGN	
	BOLLARD/GUARD POST	
PB	ELECTRICAL PULL BOX	
	SURVEY CONTROL POINT	
	ROAD CENTERLINE OR BASELINE	
	BEND	OR
	TEE	
	THRUST BLOCK	
	REDUCER	
W OR U	UNKNOWN	
	STRAW BALE SILT BARRIER	
	FENCE GATE	

NOTES

1. FOR DRAWING INDEX, SEE DRAWING 92X-5900-X-00140.

7412

REF DWG NO.	DRAWING TITLE
92X-5900-X-00140	DRAWING INDEX

000381

REV. NO.	ISSUE OR REVISION PURPOSE - DESCRIPTION	A-E	PERFORM	DATE
1	NO AS-BUILT CHANGES		N/A	
0	CERTIFIED FOR CONSTRUCTION	HH 04/13/95	STG 04/19/95	

INITIALS AND DATE

UNITED STATES DEPARTMENT OF ENERGY
FERNALD ENVIRONMENTAL MANAGEMENT PROJECT

THIS DRAWING PREPARED BY
PARSONS
THE RALPH M. PARSONS CO. - PARSONS MAIN, INC. - ENGINEERING-SCIENCE, INC.
CINCINNATI, OHIO

PROJECT NAME
SEEPAGE COLLECTION & REMOVAL OF SEDIMENT
REMOVAL ACTION NO. 38

DRAWING TITLE
LEGEND AND SYMBOLS

DRAWN BY	DATE	LEAD DISCIPLINE	DATE	CHECKED BY	DATE
K.L. RABBITT	03/08/95	ED J. KUBIN	04/12/95	K. GERARD	03/17/95

PLANT/BLDG NO.	FLOOR	SCALE	CLASS
		NONE	

SUBMITTED FOR APPROVAL: H. HUME 04/13/95 DATE
FERMCO CRD APPROVAL: STEPHEN T. GARLAND 04/19/95 DATE

DOE PROJECT NO.	TEMP PROJECT NO.	DRAWING INDEX CODE NO.	SHEET NO.	REV. NO.
V-3	WBS 1.1.1.1.2.2.6 00-90701	92X-5900-X-00141	X0003	1

PREPARED UNDER PARSONS PROJECT ORDER NUMBER: CRU2/P0139

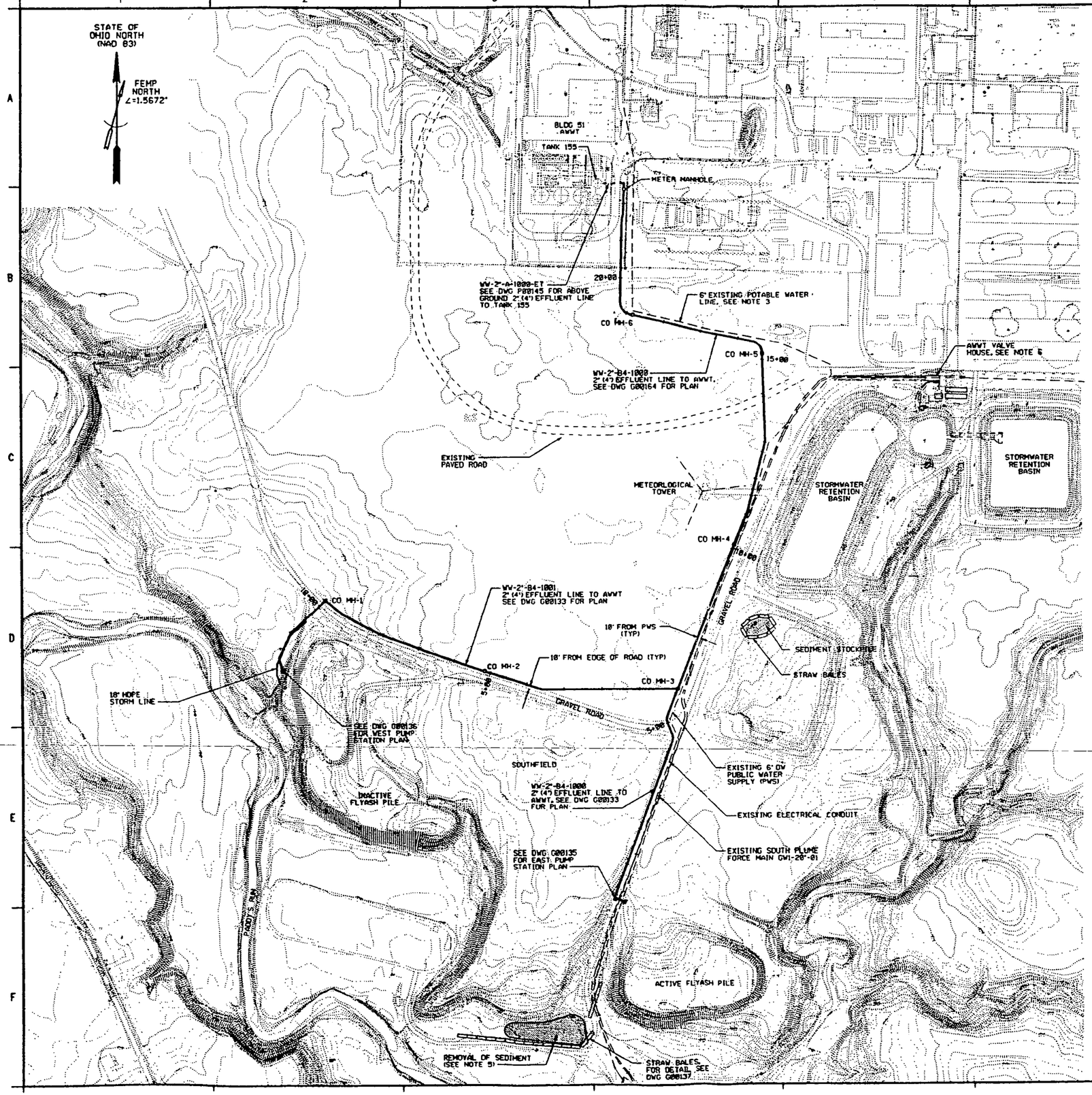

NOTES

1. FOR DRAWING INDEX, SEE DRAWING 92X-5900-X-00140.
2. EXISTING CONDITIONS SHOWN ON THIS DRAWING WERE PREPARED FROM FEMP SITE PROVIDED DATA FROM DOCUMENTS LISTED BELOW:

   PARSONS TOPOGRAPHY 1992
   FEMP CADD GRID/UTILITY DRAWINGS
   FEMP CONTRACTOR PROJECT DESIGN DOCUMENTS
   B.L. PAYNE, FIELD SURVEY 2/95.
   FIELD RUN SURVEY AVAILABLE FOR: WEST PUMP STATION, EAST PUMP STATION AND PUBLIC WATER SUPPLY ROUTE.
3. 2" HDPE EFFLUENT LINE (INSIDE A 4" HDPE CONTAINMENT LINE) TO AWWT TO FOLLOW ROUTE OF 6" POTABLE WATER LINE. THE 6" LINE IS MARKED IN THE FIELD WITH POST AND SIGN (AT 50' SPACING) AND WITH A MAGNETIC TRACE WIRE.
4. THIS DRAWING IS A MASTER SITE PLAN ONLY, SEE PLAN DRAWINGS AS IDENTIFIED FOR UTILITIES AND DETAILS OF AREAS.
5. 900 CY OF SEDIMENT 18" DEEP OR LESS IS TO BE EXCAVATED IN ACCORDANCE WITH SITE PROCEDURES IN THIS AREA. LIMITS TO BE FIELD DETERMINED. AREA IS TO BE GRADED AND SEEDED UPON COMPLETION. SEDIMENT CONTROLS TO BE INSTALLED IN ACCORDANCE WITH SITE PROCEDURES.

   EXCAVATED SEDIMENT AND EXCESS SOIL SHALL BE HAULED AND STORED IN THE CATEGORY I STOCKPILE SOUTH OF THE STORM WATER RETENTION BASIN PER THE REMOVAL ACTION 17 WORK PLAN. ANY EXCAVATED SEDIMENT OR EXCESS SOIL FOUND TO EXCEED CATEGORY I CRITERIA SHALL BE PLACED IN THE PHASE I CONTROLLED STOCKPILE AS DEFINED IN THE REMOVAL ACTION 17 WORK PLAN. EXCAVATED SEDIMENT AND EXCESS SOIL EXCEEDING CATEGORY I CRITERIA SHALL BE TRANSPORTED IN ACCORDANCE WITH THE RADIOLOGICAL PERFORMANCE REQUIREMENTS MANUAL (RM-0020).
6. FOR ELECTRICAL SERVICE ROUTING AND POWER POLE LOCATIONS, SEE DRAWING 92X-5900-E-00120.
7. DISPOSAL AND STOCKPILE OF EXCESS CONSTRUCTION MATERIAL AND WASTE IS TO BE PERFORMED IN ACCORDANCE WITH SSOP 0044: MANAGEMENT OF SITE DEBRIS AND WASTE FROM A PROJECT.

7412

REF DWG NO.	DRAWING TITLE
92X-5900-X-00140	DRAWING INDEX
92X-5900-G-00133	PIPELINE PLAN - EFFLUENT LINE SF & AFP
92X-5900-G-00135	GRADING PLAN - EAST PUMP STATION
92X-5900-G-00136	GRADING PLAN - WEST PUMP STATION
92X-5900-G-00137	SITE DETAILS - GENERAL
92X-5900-G-00164	PIPELINE PLAN - EFFLUENT LINE AT AWWT
92X-5900-E-00120	PLAN - PROJECT SITE PLAN
92X-5900-P-00145	PIPE SUPPORTS - PLAN AND DETAILS

000382

REV. NO.	ISSUE OR REVISION PURPOSE - DESCRIPTION	A-E	FEMCO	DATE
1	NO AS-BUILT CHANGES		N/A	
0	CERTIFIED FOR CONSTRUCTION	HH 04/13/95	STG 04/19/95	

UNITED STATES DEPARTMENT OF ENERGY
FERNALD ENVIRONMENTAL MANAGEMENT PROJECT

THIS DRAWING PREPARED BY
PARSONS
THE RALPH M. PARSONS CO. - PARSONS MAIN, INC. - ENGINEERING-SCIENCE, INC.
CINCINNATI, OHIO

PROJECT NAME
SEEPAGE COLLECTION & REMOVAL OF SEDIMENT
REMOVAL ACTION NO. 38

DRAWING TITLE
CIVIL
MASTER SITE PLAN

DRAWN BY	DATE	LEAD ENGINEER	DATE	CHECKED BY	DATE
Y. AFSHAR	2-22-95	ED J. KUBRIN	04/12/95	K. GERARD	3-17-95

NORM/BLDG NO.	FLOOR	SCALE	CLASS
		1"=100'	

SUBMITTED FOR APPROVAL: H. HUME 04/13/95
FEMCO CRU APPROVAL: STEPHEN T. GARLAND 04/19/95

A-E DOE PROJECT NO	FEMP PROJECT NO.	DRAWING SHEET CODE NO.	SHEET NO.	REV. NO
CRU2/P013	VBS L.1.1.1.22.6 00-90701	92X-5900-G-00125	G0001	1

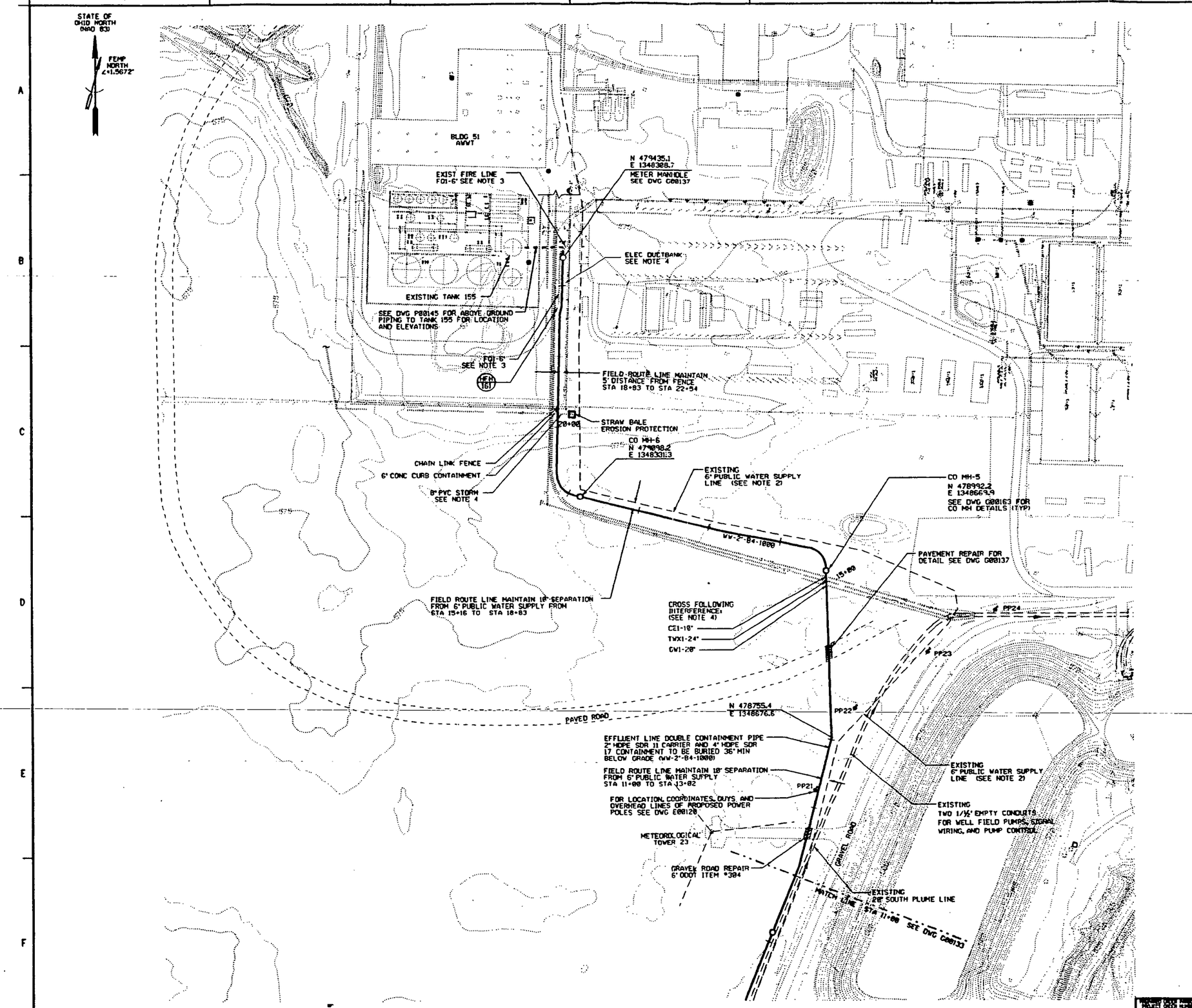

NOTES

1. EXISTING CONDITIONS SHOWN ON THIS DRAWING WERE PREPARED FROM FEMP SITE PROVIDED DATA FROM THE DOCUMENT LISTED BELOW:

   PARSONS TOPOGRAPHY 1992
   FEMP CADD GRID/UTILITY DRAWINGS
   FEMP CONTRACTOR PROJECT DESIGN DOCUMENTS
   B.L. PAYNE, FIELD SURVEY 2/95

2. 6" PUBLIC WATER SUPPLY LINE IDENTIFIED IN FIELD BY POSTED SIGNS AND MAGNETIC TRACE WIRE.
3. THE LOCATION OF UTILITIES AND FEATURES IN THIS AREA ARE APPROXIMATE. EXISTING UNDERGROUND UTILITIES NEED TO BE FIELD LOCATED. HAND PROBE PRIOR TO EXCAVATION TO VERIFY THAT EXCAVATION WILL NOT DISTURB THEM.
4. MAINTAIN 1 FOOT VERTICAL SEPARATION BETWEEN UTILITY LINES, SURFACE FEATURES AND 2" (4") EFFLUENT LINE. REMOVE AND REPLACE EXISTING CHAIN LINK FENCE AND REPAIR EXISTING CONCRETE CURB AFTER INSTALLATION OF THE EFFLUENT PIPE.

7412

REF DWG NO.	DRAWING TITLE
92X-5900-G-00133	PIPELINE PLAN - EFFLUENT LINE SF & IFP
92X-5900-G-00137	SITE DETAILS - GENERAL
92X-5900-G-00163	SITE DETAILS - CLEANOUT MANHOLE
92X-5900-E-00120	PLAN - PROJECT SITE PLAN
92X-5900-P-00145	PIPE SUPPORTS - PLAN AND DETAILS

000383

REV. NO.	ISSUE OR REVISION PURPOSE - DESCRIPTION	A-E	PDMCO	DATE
1	DRAWING REVISED PER AS-BUILT CONDITIONS FROM DRAWINGS FURNISHED BY FERMCO		N/A	
0	CERTIFIED FOR CONSTRUCTION	MH 04/13/95	STG 04/19/95	

UNITED STATES DEPARTMENT OF ENERGY
FERNALD ENVIRONMENTAL MANAGEMENT PROJECT

THIS DRAWING PREPARED BY
PARSONS
THE RALPH M. PARSONS CO. - PARSONS MAIN, INC. - ENGINEERING-SCIENCE, INC.
CINCINNATI, OHIO

PROJECT NAME
SEEPAGE COLLECTION & REMOVAL OF SEDIMENT
REMOVAL ACTION NO. 38

DRAWING TITLE
CIVIL
PIPELINE PLAN
EFFLUENT LINE AT AWWT

DRAWN BY	DATE	LEAD ENGINEER	DATE	CHECKED BY	DATE
T. AFSHAR	03/09/95	ED J. KUERIN	04/12/95	K.GERARD	03/28/95

PLANT/BLDG. NO.	FLOOR	SCALE	CLASS
		1"=50'	

SUBMITTED FOR APPROVAL	FERMCO CRD APPROVAL
H.HUME 04/13/95	STEPHEN T. GARLAND 04/19/95

PROJECT ORDER NUMBER	A-E PROJECT NO.	FEMP PROJECT NO.	DRAWING PARTY CODE NO.	SHEET NO.	REV. NO.
CRU2/P0139	V-5	WBS 1.1.1.1.2.2.6 00-90701	92X-5900-G-00164	G0002	1

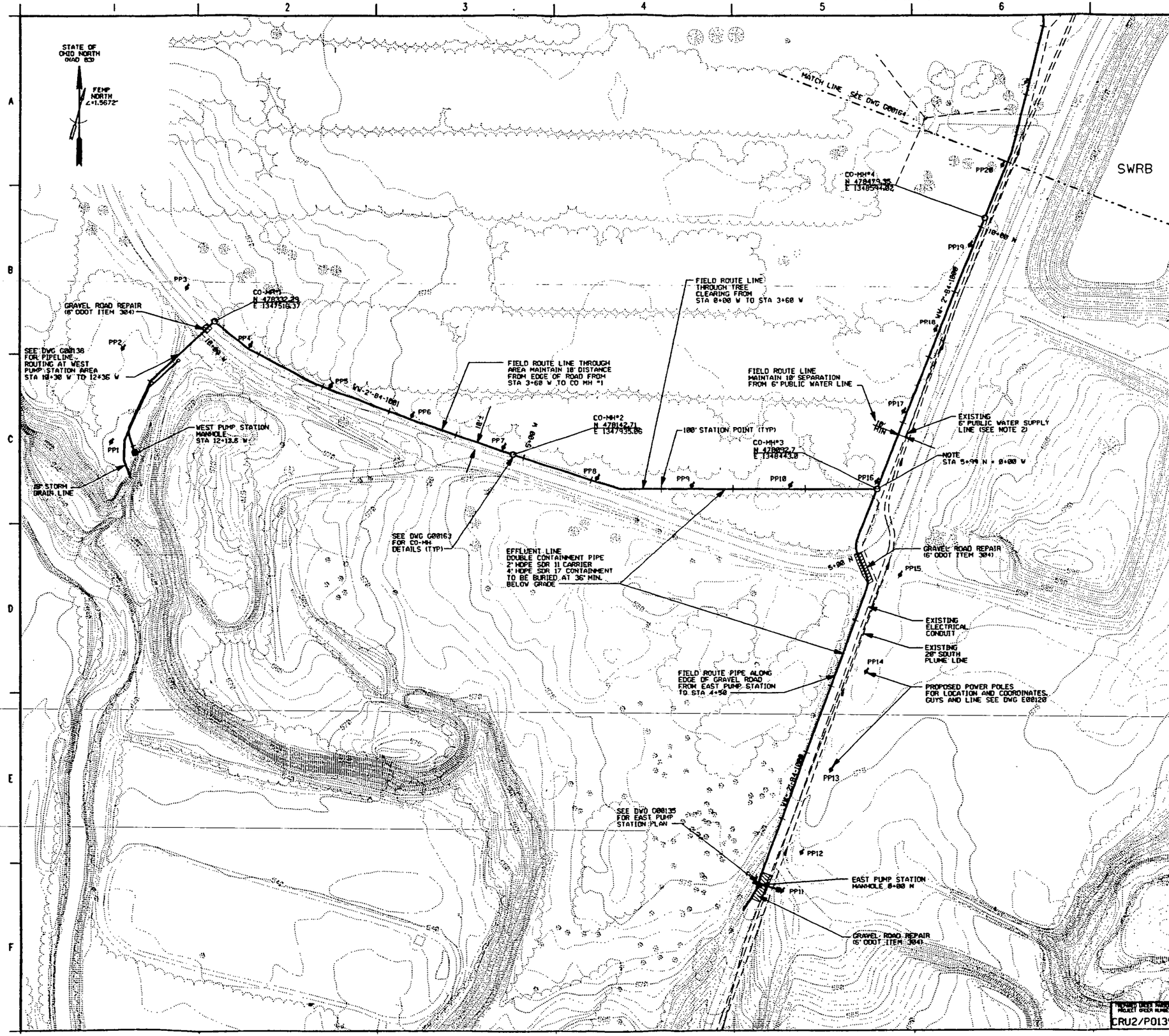

NOTES

1. EXISTING CONDITIONS SHOWN ON THIS DRAWING WERE PREPARED FROM FEMP SITE PROVIDED DATA FROM DOCUMENTS LISTED BELOW.

   EXISTING SITE DATA SOURCE (IN PLANT FILES)
   PARSONS TOPOGRAPHY, 1992
   FEMP CADD GRID/UTILITY DRAWINGS
   FEMP CONTRACTOR PROJECT DESIGN DOCUMENTS
   B.L. PAYNE FIELD SURVEY, 1995

2. 6" PUBLIC WATER SUPPLY LINE IDENTIFIED IN FIELD BY POSTED SIGNS AND MAGNETIC TRACE WIRE.

E-7412

REF DWG NO.	DRAWING TITLE
92X-5900-G-00136	GRADING PLAN - WEST PUMP STATION
92X-5900-G-00135	GRADING PLAN - EAST PUMP STATION
92X-5900-G-00163	SITE DETAILS - CLEANOUT MANHOLE
92X-5900-G-00164	PIPELINE PLAN - EFFLUENT LINE AT AWWT
92X-5900-E-00120	ELECTRICAL - PROJECT SITE PLAN

000384

REV. NO.	ISSUE OR REVISION PURPOSE - DESCRIPTION	A-E	FEMCO	DATE
1	DRAWING REVISED PER AS-BUILT CONDITIONS FROM DRAWINGS FURNISHED BY FERMCO	11-9-95	N/A	
0	CERTIFIED FOR CONSTRUCTION	HH 04/13/95	STG 04/19/95	

INITIALS AND DATE

UNITED STATES DEPARTMENT OF ENERGY
FERNALD ENVIRONMENTAL MANAGEMENT PROJECT

THIS DRAWING PREPARED BY
PARSONS
THE RALPH M. PARSONS CO. - PARSONS MAIN, INC. - ENGINEERING-SCIENCE, INC.
CINCINNATI, OHIO

PROJECT NAME
SEEPAGE COLLECTION & REMOVAL OF SEDIMENT
REMOVAL ACTION NO. 38

DRAWING TITLE
CIVIL
PIPELINE PLAN
EFFLUENT LINE SF & IFP

DRAWN BY	DATE	LEAD ENGINEER	DATE	CHECKED BY	DATE
Y. AFHSAR	3-18-95	ED J. KUBRIN	04/12/95	K. GERARD	3-28-95

PLANT/BLDG. NO. | FLOOR | SCALE 1"=50' | CLASS

SUBMITTED FOR APPROVAL: H. HUNE 04/13/95 (A-E DATE)
FEMCO CDD APPROVAL: STEPHEN T. GARLAND 04/19/95 (DATE)

THIS DWG UNIQUE PROJECT ORDER NUMBER	ER PROJECT NO.	FEMP PROJECT NO.	DRAWING INDEX CODE NO.	SHEET NO.	REV. NO.
CRU2/P0139	V-6	WBS 1.1.1.1.2.2.6 00-90701	92X-5900-G-00133	G0003	1

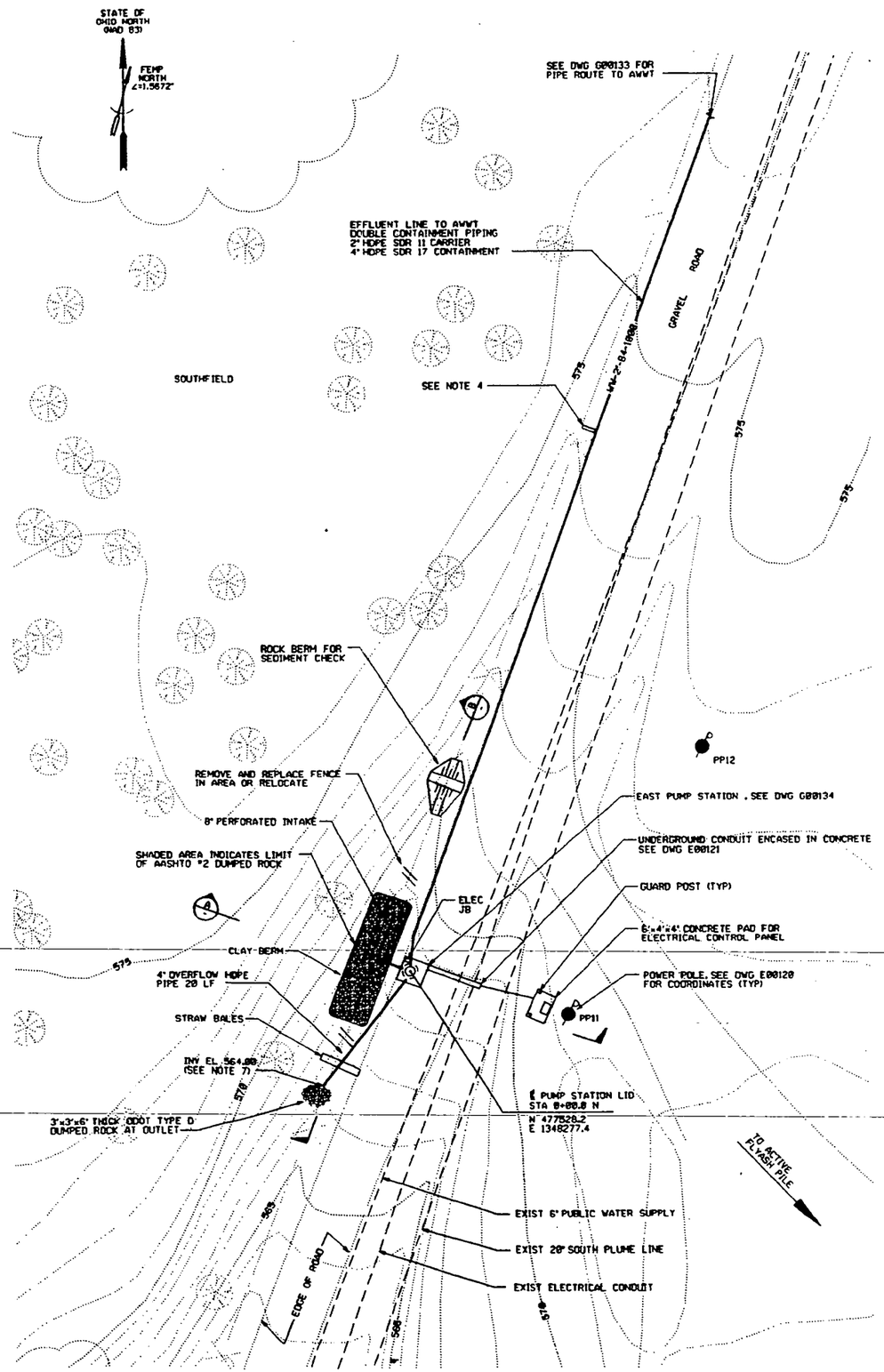

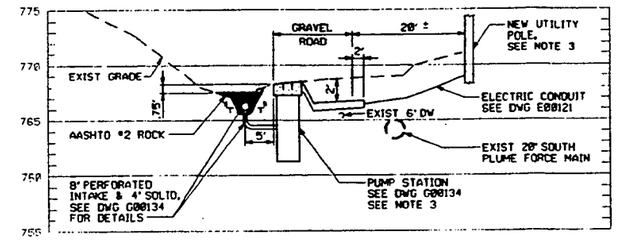

SECTION (A)
1" = 10' H
1" = 5' V

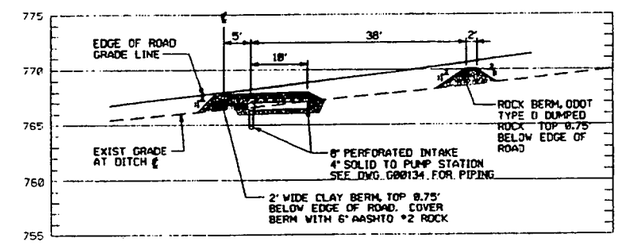

SECTION (B)
1" = 10' H
1" = 5' V

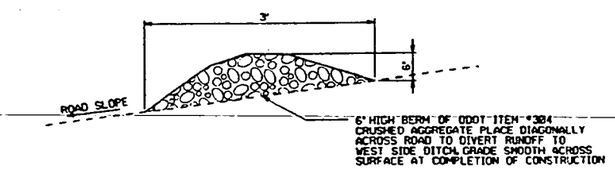

DETAIL (1)
NTS

NOTES

1. FOR DRAWING INDEX, SEE DRAWING 92X-5900-X-00140.
2. EXISTING CONDITIONS SHOWN ON THIS DRAWING WERE PREPARED FROM FEMP SITE PROVIDED DATA FROM THE DOCUMENT LISTED BELOW:

   PARSONS TOPOGRAPHY 1992
   FEMP CADD GRID/UTILITY DRAWINGS
   FEMP CONTRACTOR PROJECT DESIGN DOCUMENTS
   B.L. PAYNE, FIELD SURVEY 2/95.
3. THE EXISTING UNDERGROUND UTILITIES NEEDS TO BE FIELD LOCATED. HAND PROBE PRIOR TO EXCAVATION TO VERIFY THAT EXCAVATION WILL NOT DISTURB THEM.
4. INSTALL STRAW BALE DIKES EVERY 100' ACROSS WEST SIDE DITCH BETWEEN EAST PUMP STATION TO ROAD INTERSECTION.
5. CONCRETE SHALL BE ODOT ITEM 499, TYPE C, 4000 PSI UNLESS OTHERWISE NOTED.
6. FOR POWER POLE LOCATIONS, SEE DRAWING 92X-5900-E-00120.
7. FIELD SURVEY SHOWS DITCH INVERT IS LOWER IN ELEVATION THAN SHOWN (ON AERIAL TOPOGRAPHY) THROUGHOUT AREA. FIELD VERIFY ELEVATION PRIOR TO CONSTRUCTION.

7412

REF DWG NO.	DRAWING TITLE
92X-5900-X-00140	DRAWING INDEX
92X-5900-G-00134	SITE DETAILS - PUMP STATIONS
92X-5900-E-00121	ELECTRICAL - EAST PUMP LOCATION
92X-5900-G-00133	PIPELINE PLAN - EFFLUENT LINE SF AND IFP
92X-5900-E-00120	ELECTRICAL - PROJECT SITE PLAN

000385

REV. NO.	ISSUE OR REVISION PURPOSE - DESCRIPTION	A-E	FERNCO	DATE
1	DRAWING REVISED PER AS-BUILT CONDITIONS FROM DRAWINGS FURNISHED BY FERNCO	[illegible] 1-7-97	N/A	
0	CERTIFIED FOR CONSTRUCTION	HH 04/13/95	STG 04/19/95	

UNITED STATES
DEPARTMENT OF ENERGY
FERNALD ENVIRONMENTAL MANAGEMENT PROJECT

THIS DRAWING PREPARED BY
PARSONS
THE RALPH M. PARSONS CO. - PARSONS MAIN, INC. - ENGINEERING-SCIENCE, INC.
CINCINNATI, OHIO

PROJECT NAME
SEEPAGE COLLECTION & REMOVAL OF SEDIMENT
REMOVAL ACTION NO. 3B

DRAWING TITLE
CIVIL
GRADING PLAN
EAST PUMP STATION

DRAWN BY	DATE	LEAD ENGINEER	DATE	CHECKED BY	DATE
R. ESPARZA	03/01/95	ED J. KUBRIN	04/12/95	E. KUBRIN	03/30/95

PLANT/BLDG. NO.	FLOOR	SCALE	CLASS
		1"=10'	

SUBMITTED FOR APPROVAL	FERNCO CBD APPROVAL
H. HUME 04/13/95	STEPHEN T. GARLAND 04/19/95

PREPARED UNDER PARSONS PROJECT ORDER NUMBER	A-E CBD PROJECT NO.	TCMP PROJECT NO.	DRAWING INDEX CODE NO.	SHEET NO.	REV. NO.
CRU2/P0139	V-7	VBS 1.1.1.1.2.2.6 00-90701	92X-5900-G-00135	G0004	1

000385

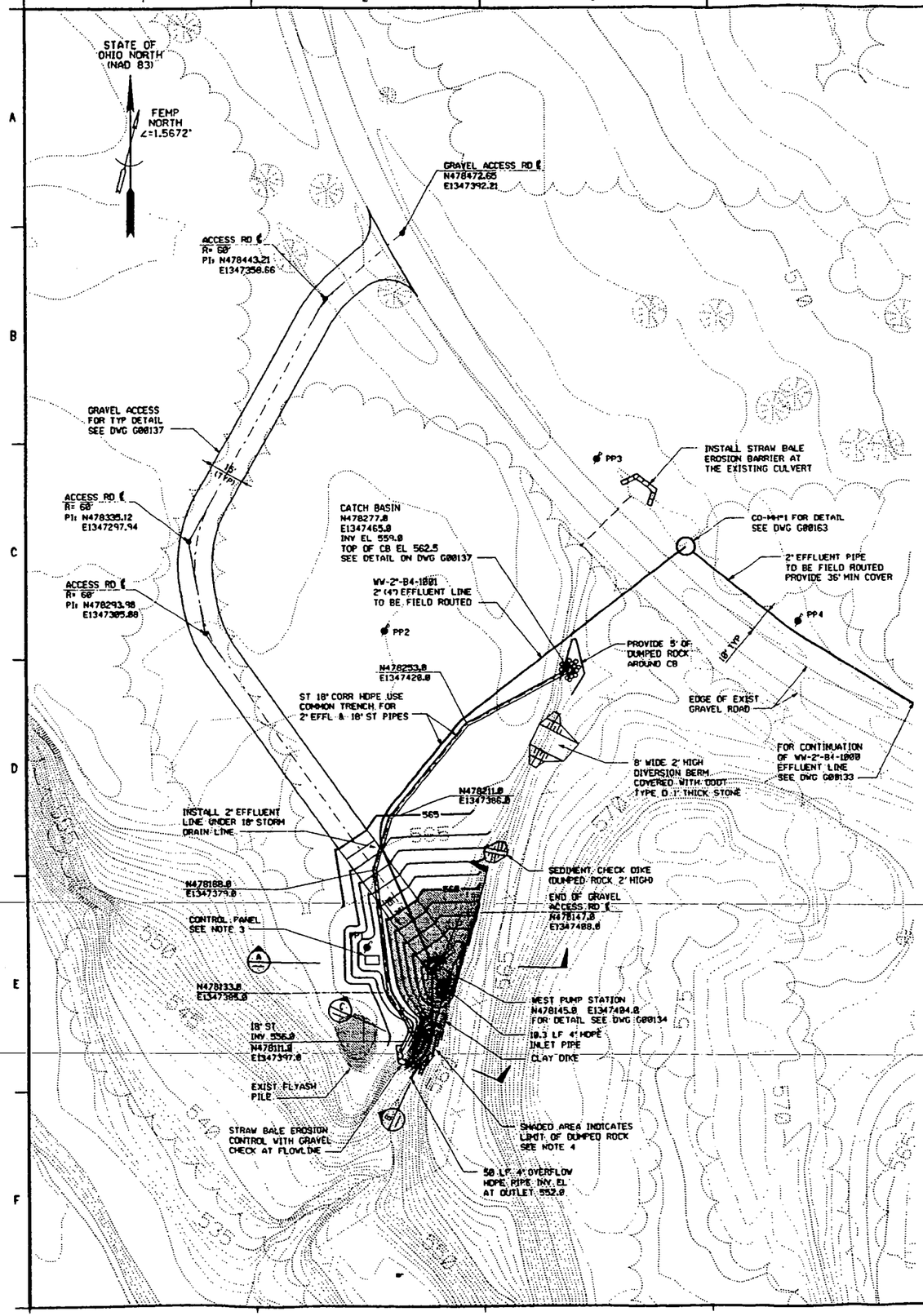

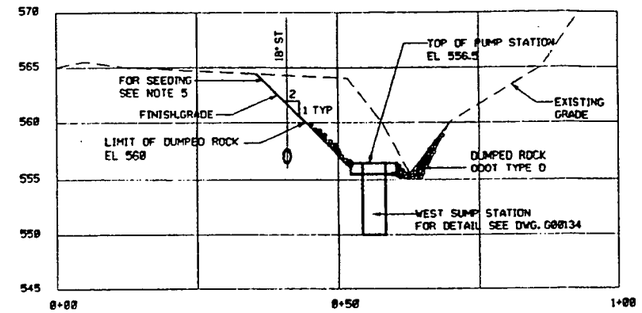

SECTION A
HOR: 1"=10'
VER: 1"=5'

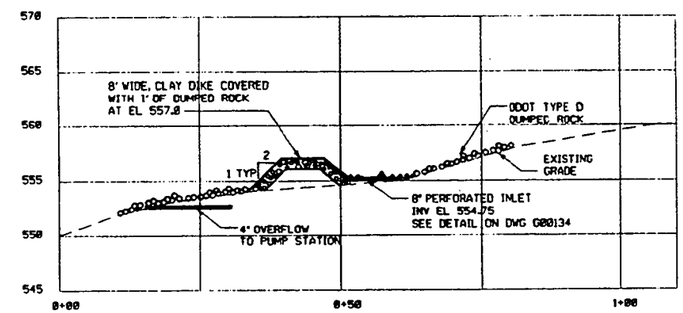

SECTION B
HOR: 1"=10'
VER: 1"=5'

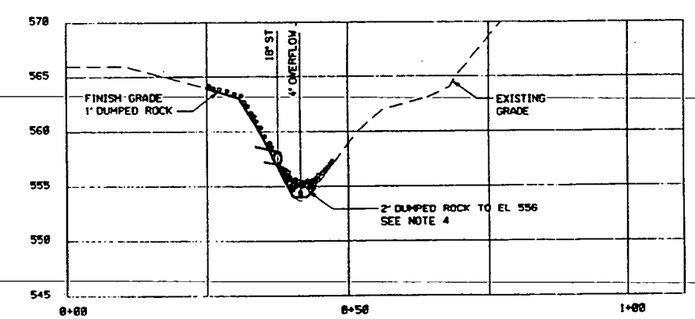

SECTION C
HOR: 1"=10'
VER: 1"=5'

NOTES

1. FOR DRAWING INDEX, SEE DRAWING 92X-5900-X-00140.
2. EXISTING CONDITIONS SHOWN ON THIS DRAWING WERE PREPARED FROM FEMP SITE PROVIDED DATA FROM THE DOCUMENT LISTED BELOW:

   PARSONS TOPOGRAPHY 1992
   FEMP CADD GRID/UTILITY DRAWINGS
   FEMP CONTRACTOR PROJECT DESIGN DOCUMENTS
   B.L. PAYNE, FIELD SURVEY 2/95.
3. FOR POWER POLE LOCATIONS, SEE DRAWING 92X-5900-E-00120. FOR LOCATION OF ELECTRICAL PANNEL SEE DWG 92X-5900-E-00121
4. DUMPED ROCK SHALL BE ODOT ITEM 601.08 TYPE D WITH A MINIMUM THICKNESS OF 1 FT UNLESS OTHERWISE NOTED.
5. HYDRO SEED GRADED AREA ABOVE DUMPED ROCK LIMIT. USE NORTH AMERICAN GREEN STRAW BLANKET (TYPE S75 OR EQUAL) FOR EROSION CONTROL.
6. GRADING SHOWN ARE APPROXIMATE. NO AS-BUILT FIELD SURVEY CONDUCTED.

E-7412

REF DWG NO.	DRAWING TITLE
92X-5900-G-00133	PIPELINE PLAN - EFFLUENT LINE SF & IFP
92X-5900-G-00134	SITE DETAILS - PUMP STATIONS
92X-5900-G-00137	SITE DETAILS - GENERAL
92X-5900-E-00120	PLAN - PROJECT SITE PLAN

000386

REV. NO.	ISSUE OR REVISION PURPOSE - DESCRIPTION	INITIALS AND DATE		
1	DRAWING REVISED PER AS-BUILT CONDITIONS FROM DRAWINGS FURNISHED BY FERMCO	[illegible] 4-27-95	N/A	
0	CERTIFIED FOR CONSTRUCTION	HH 04/13/95	STG 04/19/95	
		A-E	FERMCO	BWR

UNITED STATES DEPARTMENT OF ENERGY
FERNALD ENVIRONMENTAL MANAGEMENT PROJECT

THIS DRAWING PREPARED BY
PARSONS
THE RALPH M. PARSONS CO. - PARSONS MAIN, INC. - ENGINEERING-SCIENCE, INC.
CINCINNATI, OHIO

PROJECT NAME
SEEPAGE COLLECTION & REMOVAL OF SEDIMENT
REMOVAL ACTION NO. 38

DRAWING TITLE
CIVIL GRADING PLAN WEST PUMP STATION

DRAWN BY	DATE	LEAD ENGINEER	DATE	CHECKED BY	DATE
Y. AFSHAR	2-28-95	ED J. KUERIN	04/12/95	K. GERARD	3-28-95

PLANT/BLDG NO.	FLOW	SCALE	CLASS
		1"=20'	

SUBMITTED FOR APPROVAL: H. HUME 04/13/95 DATE
FERMCO CRU APPROVAL: STEPHEN T. GARLAND 04/19/95 DATE

PROJECT DWG SUBMITTAL PROJECT DRAWN NUMBER	FEMP PROJECT NO.	FERMCO PROJECT NO.	DRAWING NUMBER CODE NO.	SHEET NO.	REV. NO.
CRU2/P013	V-8	WBS 1.1.1.1.2.2.6 00-90701	92X-5900-G-00136	G0005	1

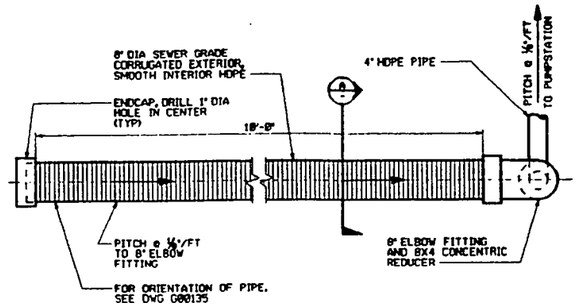

EAST STATION PLAN
NTS

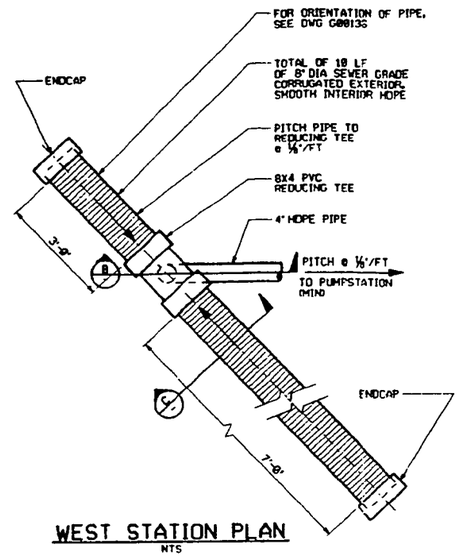

WEST STATION PLAN
NTS

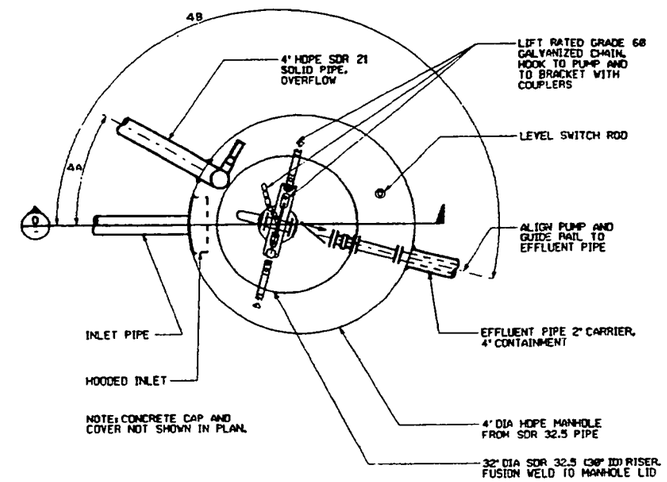

TYPICAL PUMP MANHOLE PLAN
1"=1'-0"

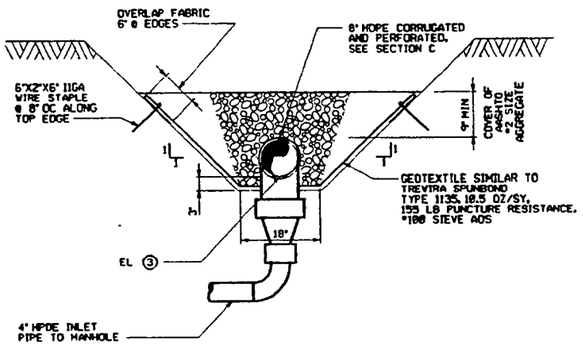

EAST STATION SECTION (A)
NTS

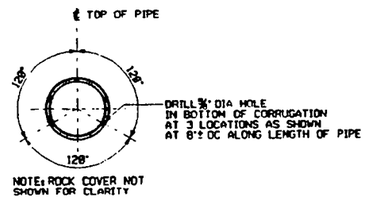

SECTION (C)
1½"=1'-0"

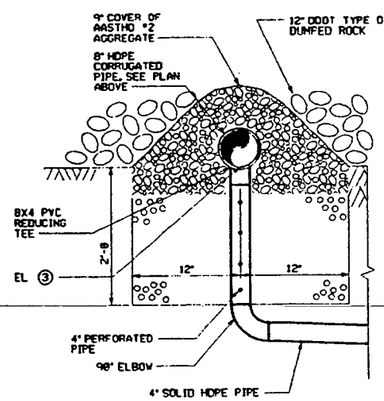

WEST STATION SECTION (B)
NTS

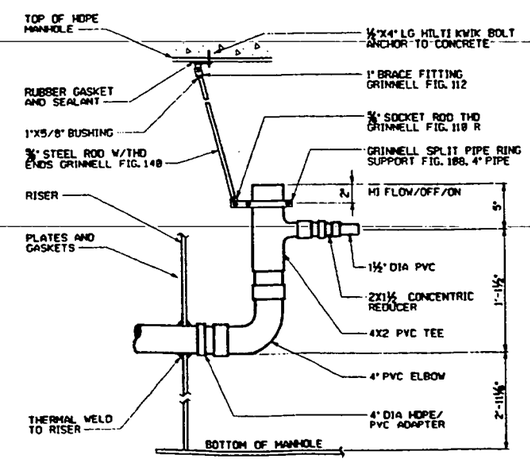

DETAIL (1)
1½"=1'-0"

TABLE NO. 1		
	EAST PUMP STA	WEST PUMP STA
ELEV ①	568.50	556.50
ELEV ②	561.50	550.00
ELEV ③	566.88	554.75
ΔA	280°-15'	21°
ΔB	72°-24'	183°

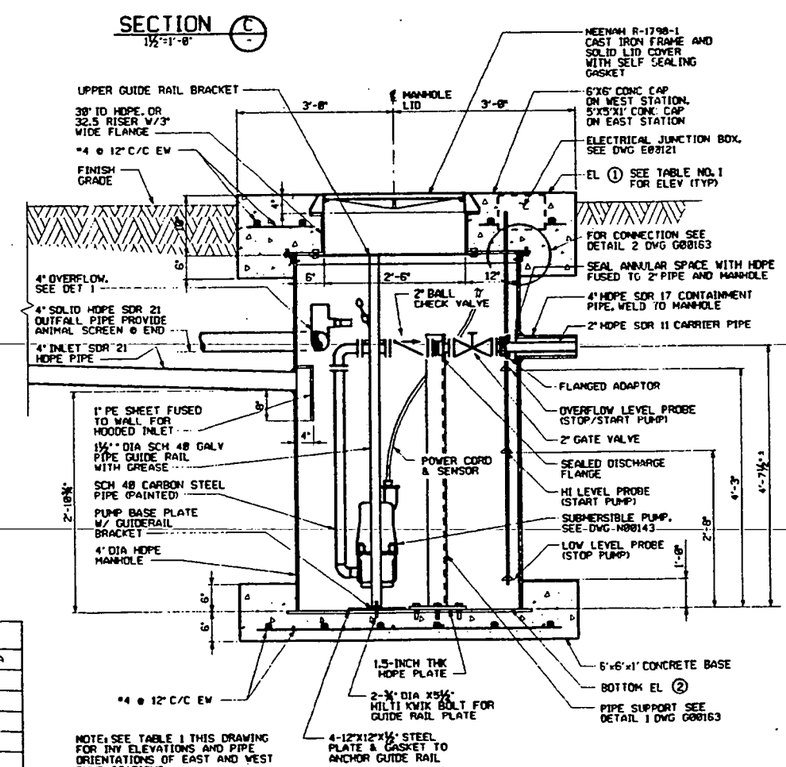

TYPICAL PUMP STATION MANHOLE SECTION (D)
NTS

NOTES

GENERAL:

1. UNLESS OTHERWISE NOTED ALL MATERIALS SHALL CONFORM TO THE STATE OF OHIO DEPARTMENT OF TRANSPORTATION (ODOT) CONSTRUCTION AND MATERIAL SPECIFICATIONS DATED JANUARY 1, 1995.
2. AGGREGATE TO BE ODOT ITEM 703, AASHTO M43 AT THE SIZE INDICATED.

PIPE:

3. HDPE CORRUGATED PIPE SHALL BE SIMILAR TO ADVANCED DRAINAGE SYSTEMS (ADS) N-12 PIPE (SMOOTH INTERIOR, CORRUGATED EXTERIOR). FITTINGS TO BE COMPATIBLE WITH PIPE.
4. DUAL CONTAINMENT PIPE SHALL BE HDPE MATERIALS. SEE SPECIFICATIONS DWG 92X-5900-G-00173.
5. PENETRATIONS TO MANHOLE ARE TO BE WATERTIGHT. USE GASKETS OR THERMAL FUSE PIPE TO WALL.
6. PVC SHALL BE SCHEDULE 40 ASTM D1784 MATERIAL UNLESS OTHERWISE NOTED.

CONCRETE:

7. ODOT ITEM 499, CLASS C 4000 PSI AT 28 DAYS.
8. TOP SLOPE OF CONCRETE CAP AT EAST PUMP STATION SHALL MATCH EXISTING SLOPE OF ROAD.
9. EAST STATION SHALL HAVE NO. 6 REBAR AT 6" OC EACHWAY 2" FROM BOTTOM. REBAR TO BE ASTM A615, 60 KSI YIELD GRADE.
10. FOR DRAWING INDEX, SEE DRAWING 92X-5900-X-00148.
11. FOR VALVE SPECIFICATIONS, SEE DRAWING 92X-5900-G-00163.

7412

REF DWG NO.	DRAWING TITLE
92X-5900-X-00140	DRAWING INDEX
92X-5900-G-00135	GRADING PLAN - EAST PUMP STATION
92X-5900-G-00136	GRADING PLAN - WEST PUMP STATION
92X-5900-G-00163	SITE DETAILS
92X-5900-E-00121	PLANS
92X-5900-N-00143	PIPING AND INSTRUMENTATION DIAGRAM

000387

REV. NO.	ISSUE OR REVISION PURPOSE - DESCRIPTION	A-E	FORMOR	DATE
1	DRAWING REVISED PER AS-BUILT CONDITIONS FROM DRAWINGS FURNISHED BY FERMCO	KLB 04/13/95		N/A
0	CERTIFIED FOR CONSTRUCTION	HH 04/13/95	STG 04/19/95	

UNITED STATES DEPARTMENT OF ENERGY
FERNALD ENVIRONMENTAL MANAGEMENT PROJECT

THIS DRAWING PREPARED BY
PARSONS
THE RALPH M. PARSONS CO. - PARSONS MAIN, INC. - ENGINEERING-SCIENCE, INC.
CINCINNATI, OHIO

PROJECT NAME
SEEPAGE COLLECTION & REMOVAL OF SEDIMENT
REMOVAL ACTION NO. 30

DRAWING TITLE
CIVIL
SITE DETAILS
PUMP STATIONS

DRAWN BY	DATE	LEAD ENGINEER	DATE	CHECKED BY	DATE
K.L. RABBITT	03/01/95	ED J. KUBRIN	04/12/95	K. GERARD	03/28/95

PLANT/BLDG. NO. | FLOOR | SCALE: AS SHOWN | CLASS

SUBMITTED FOR APPROVAL: H. HUME 04/13/95
FERMCO CRD APPROVAL: STEPHEN T. GARLAND 04/19/95

DOE PROJECT NO.	TEMP PROJECT NO.	DRAWING INDEX CODE NO.	SHEET NO.	REV. NO.
V-9	WBS 1.1.1.2.2.6 00-90701	92X-5900-G-00134	G0006	1

PREPARED UNDER PARSONS PROJECT ORDER NUMBER CRU2/P0139

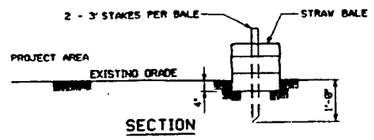

STRAW BALE EROSION CONTROL DETAIL
NTS

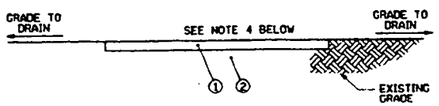

CRUSHED AGGREGATE ACCESS ROAD DETAIL
NTS

1. ODOT ITEM 304 STABILIZED CRUSHED AGGREGATE (1-6" COURSE).
2. COMPACT EXISTING GRADE TO 95% STANDARD PROCTOR.
3. SLOPE TO HAVE POSITIVE DRAINAGE.
4. WIDTH VARIES. SEE DIMENSIONS ON DRAWINGS.

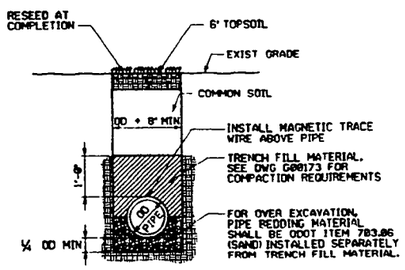

PIPE BEDDING DETAIL
NTS

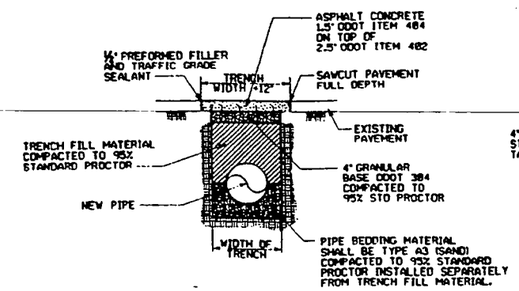

PAVEMENT REPAIR DETAIL
NTS

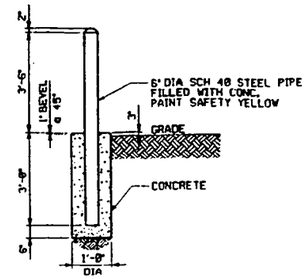

EXTERIOR GUARD POST DETAIL
NTS

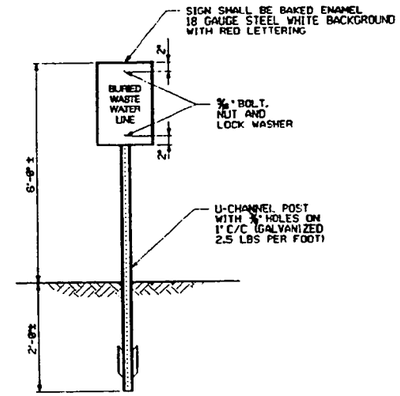

PIPE LINE SIGN DETAIL
NTS

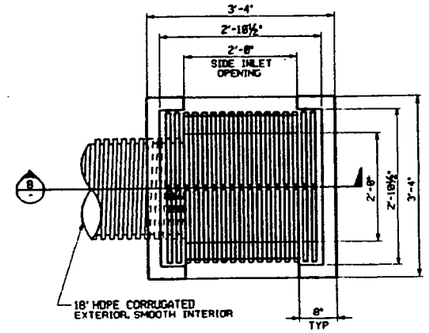

PLAN
NTS

NOTE: SEE DWG G 00136 FOR ELEVATIONS AND LOCATION

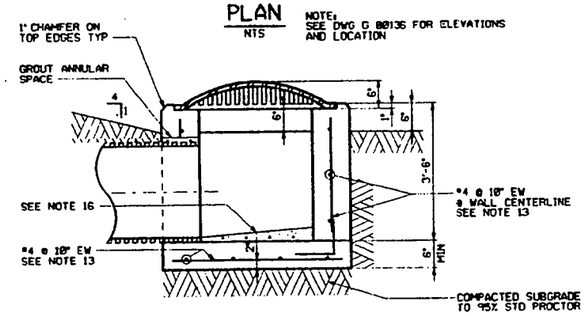

SECTION B
NTS

CATCH BASIN DETAIL

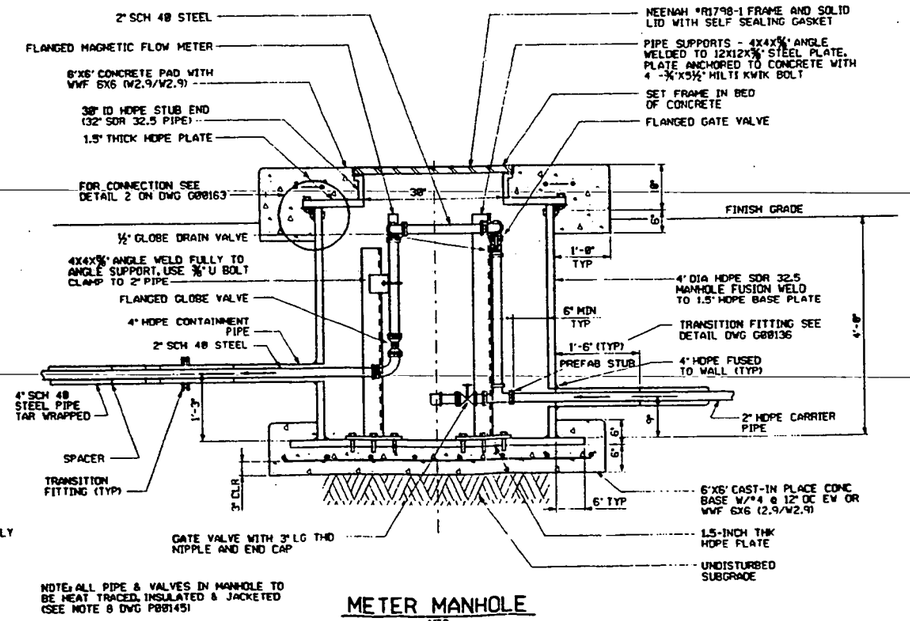

NOTE: ALL PIPE & VALVES IN MANHOLE TO BE HEAT TRACED, INSULATED & JACKETED (SEE NOTE 8 DWG P00145)

METER MANHOLE
NTS

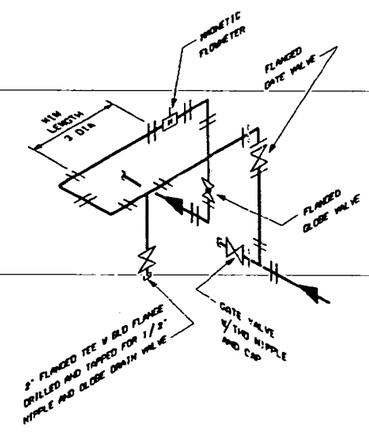

NOTES 7412

GENERAL:

1. FOR DRAWING INDEX, SEE DRAWING 92X-5900-X-00140.
2. UNLESS OTHERWISE NOTED, ALL MATERIALS SHALL CONFORM TO THE STATE OF OHIO DEPARTMENT OF TRANSPORTATION (ODOT) CONSTRUCTION AND MATERIAL SPECIFICATIONS DATED JANUARY 1, 1993.
3. CONCRETE SHALL BE ODOT ITEM 499, CLASS C (4000 PSI AT 28 DAYS) UNLESS NOTED OTHERWISE.
4. SEE NOTE 1 ON DWG 92X-5900-G-00173.

SEDIMENT CONTROL NOTES:

5. UNLESS OTHERWISE NOTED, ALL MATERIALS AND WORK SHALL CONFORM TO ODOT ITEM 207.
6. INSPECT SEDIMENT CONTROL MEASURES AFTER EACH RAINFALL AND AT LEAST DAILY DURING PROLONGED RAINFALL. MAKE REPAIRS TO DAMAGED BALES, END RUNS, AND UNDERCUTTING OF THE BALES. REPLACE OR SUPPLEMENT BALES AS NECESSARY.
7. REMOVE SEDIMENT BUILDUP WHEN THE LEVEL OF DISPOSITION IS APPROXIMATELY ONE-HALF THE HEIGHT OF THE BARRIER.
8. APPLY CLEAN WATER TO CONTROL FUGITIVE DUST.
9. IF A DISTURBED AREA WILL NOT BE ACTIVELY WORKED ON FOR A PERIOD GREATER THAN 28 DAYS, IT SHALL BE TEMPORARILY SEEDED AND MULCHED.
10. STRAW BALES TO BE USED WHEN NATURAL GROUND IS LEVEL OR SLOPING AWAY FROM PROJECT.
11. PLACE STRAW BALES APPROXIMATELY PARALLEL TO BOTTOM OF FILL SLOPE.
12. STRAW BALES SHALL BE STANDARD SIZE 18" x 18" x 48".

CATCH BASIN NOTES:

13. CATCH BASIN SHALL BE PRECAST CONCRETE PER ODOT ITEM 499 CLASS C, 4000 PSI AT 28 DAYS AND SHALL MEET ODOT ITEM 706.13 REQUIREMENTS WITH 6 ±2% AIR VOID CONTENT REINFORCING TO BE ASTM A615, 60 KSI YIELD GRADE. REINFORCING TO BE CONTINUOUS AT CORNERS. ALL LAPS 1'-4".
14. GRATE SHALL BE HEAVY DUTY, BEE HIVE SHAPE, WITH 600 SQUARE INCHES OF OPENING, SIMILAR TO EAST JORDAN IRON WORKS NO. 6610. DIMENSIONS OF INLET ARE BASED ON THIS GRATE. CHANGES IN GRATE MAY REQUIRE CHANGES TO THE INLET. ANY CHANGES SHALL BE APPROVED BY FERMCO CONSTRUCTION CONTRACTS MANAGER PRIOR TO ORDERING, FABRICATION, OR INSTALLATION OF ANY ITEM.
15. OPENINGS FOR PIPE SHALL BE OD +2".
16. THE OUTLET PIPE MAY BE PLACED ON TOP OF BOTTOM SLAB WITH THE BOTTOM SHAPED TO DRAIN WITH GROUT.
17. INVERT OF THE OUTLET PIPE IS 559.00'.
18. PROTECT PIPE AND CATCH BASIN FROM SILTATION DURING CONSTRUCTION BY INSTALLING STRAW BALE EROSION CONTROL BARRIER AROUND BASIN/PIPE INLET.

REF DWG NO.	DRAWING TITLE
92X-5900-G-00140	DRAWING INDEX
92X-5900-G-00136	GRADING PLAN - WEST PUMP STATION
92X-5900-G-00173	SPECIFICATIONS
92X-5900-G-00163	SITE DETAILS
92X-5900-P-00145	PIPE SUPPORTS

000388

REV. NO.	ISSUE OR REVISION PURPOSE - DESCRIPTION	A-E	FERMCO	DATE
1	DRAWING REVISED PER AS-BUILT CONDITIONS FROM DRAWINGS FURNISHED BY FERMCO	[illegible] 04/19/95	N/A	
0	CERTIFIED FOR CONSTRUCTION	HH 04/13/95	STO 04/19/95	

INITIALS AND DATE

UNITED STATES DEPARTMENT OF ENERGY
FERNALD ENVIRONMENTAL MANAGEMENT PROJECT

THIS DRAWING PREPARED BY
PARSONS
THE RALPH M. PARSONS CO. - PARSONS MAIN, INC. - ENGINEERING-SCIENCE, INC.
CINCINNATI, OHIO

PROJECT NAME
SEEPAGE COLLECTION & REMOVAL OF SEDIMENT
REMOVAL ACTION NO. 30

DRAWING TITLE
CIVIL
SITE DETAILS
GENERAL

DRAWN BY	DATE	LEAD ENGINEER	DATE	CHECKED BY	DATE
K.L. RABBITT	03/06/95	ED J. KUBRIN	04/12/95	E. KUBRIN	03/18/95

PLANT/BLDG NO	FLOOR	SCALE	CLASS
		AS SHOWN	

SUBMITTED FOR APPROVAL	FERMCO CRD APPROVAL
H. HUME 04/13/95	STEPHEN T. GARLAND 04/19/95

DOE PROJECT NO	TEMP PROJECT NO	DRAWING INDEX CODE NO.	SHEET NO.	REV. NO.
V-10	WBS 1.1.1.1.2.2.6 00-90701	92X-5900-G-00137	G0007	1

PREPARED UNDER PARSONS PROJECT ORDER NUMBER CRU2/P0139

000388

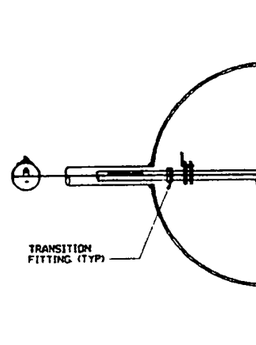

TYPE 1

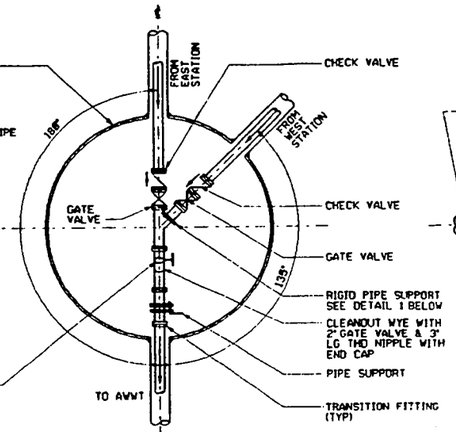

TYPE 2

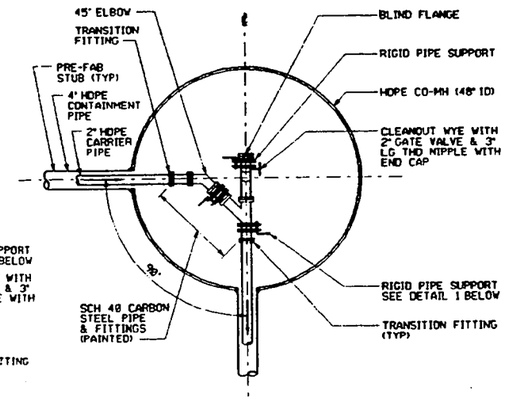

TYPE 3

TABLE NO. 1		
CLEAN OUT MANHOLE (CO MH)		
CO-MH#	PLAN TYPE	VALVE ARRANGEMENT #
1	3	SEE PLAN
2	1	1
3	2	SEE PLAN
4	1	1
5	1	1
6	1	1

TYPICAL CLEANOUT MANHOLE PLANS

1"=1'-0"

NOTE: SEE TABLE 1 FOR TYPE CLEANOUT OF SPECIFIC CO-MH

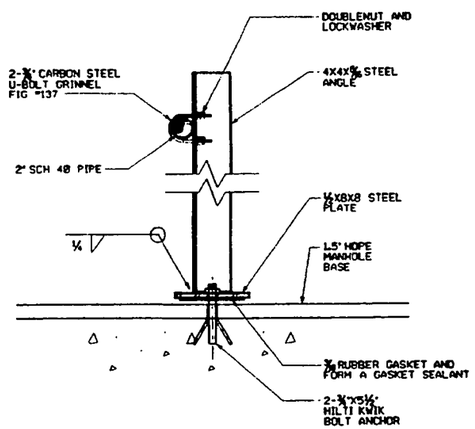

DETAIL 1
NTS

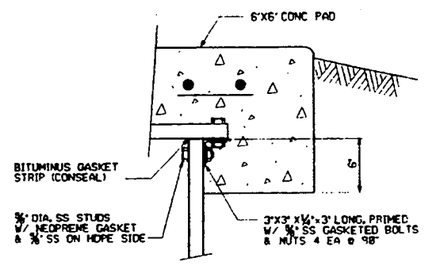

DETAIL 2
NTS

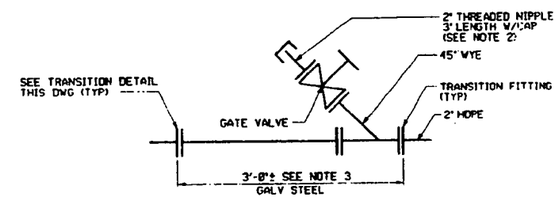

CO-MH VALVE ARRANGEMENT #1

NTS

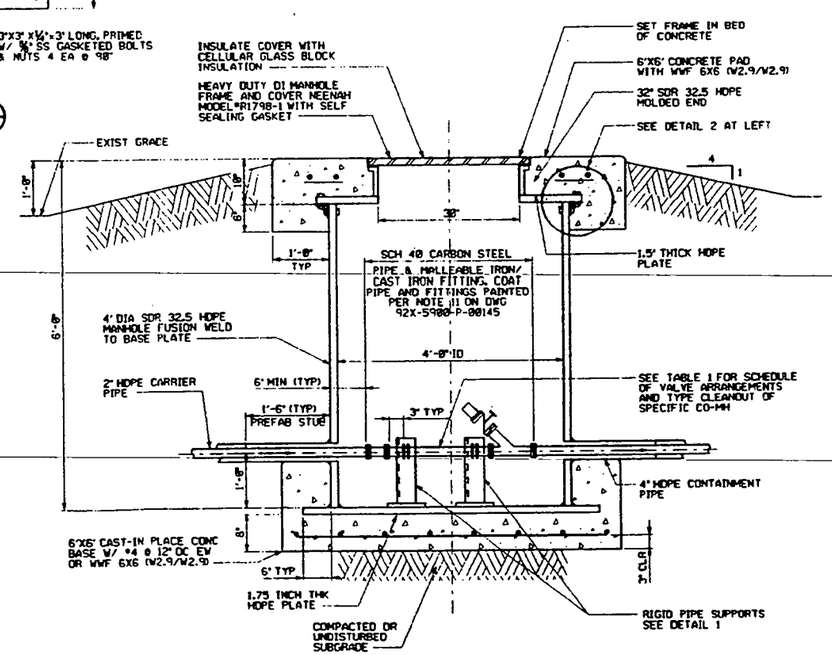

TYPICAL CLEANOUT - MANHOLE (CO-MH) SECTION A

1"=1'-0"

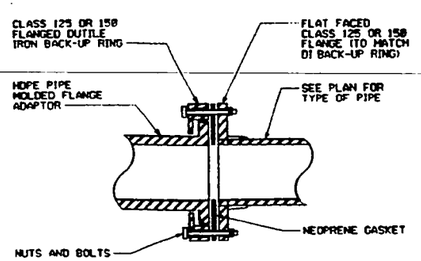

TRANSITION FITTING DETAIL

NTS

NOTES

GENERAL:

1. FOR DRAWING INDEX, SEE DRAWING 92X-5900-X-00140.
2. CONNECT HOSE TO END AND RELIEVE STATIC HEAD PRESSURE INTO TANK PRIOR TO CLEAN OUT OPERATIONS.
3. FINAL DIMENSION OF LENGTH OF STEEL FITTINGS AND VALVES IN THE MANHOLES WILL VARY DUE TO EXPANSION AND CONTRACTION OF HDPE PIPE. PIPE AND MANHOLE SHOULD BE BURIED FOR 5 DAYS BEFORE SETTING FITTINGS AND ANCHOR SUPPORTS. EACH MANHOLE WILL NEED A SEPARATE MEASUREMENT.
4. THE FOLLOWING VALVE SPECIFICATIONS ARE:

   CHECK -SWING CHECK, CLASS 125, FLANGED, SIMILAR TO FLYGT MDL VALVE MODEL.

   GATE - IRON BODY, RISING STEM, CLASS 125, FLANGED, 150 PSI WOG.

   GLOBE - IRON BODY, BRONZE TRIM, YOKE BONNET, CLASS 125 FLANGED.
5. FUSION WELD BY MANUFACTURER ALL PIPE PENETRATIONS TO HDPE MANHOLE.
6. CONCRETE SHALL BE ODOT TYPE F, 3000 PSI. REBAR SHALL BE 60 KSI YIELD STRENGTH.

REF DWG NO.	DRAWING TITLE
92X-5900-X-00140	DRAWING INDEX
92X-5900-G-00137	SITE DETAILS

000389

REV. NO.	ISSUE OR REVISION PURPOSE - DESCRIPTION	A-E	FERMCO	DATE
1	DRAWING REVISED PER AS-BUILT CONDITIONS FROM DRAWINGS FURNISHED BY FERMCO		N/A	
0	CERTIFIED FOR CONSTRUCTION	HH 04/13/95	STG 04/19/95	

INITIALS AND DATE

UNITED STATES DEPARTMENT OF ENERGY
FERNALD ENVIRONMENTAL MANAGEMENT PROJECT

THIS DRAWING PREPARED BY
PARSONS
THE RALPH M. PARSONS CO. - PARSONS MAIN, INC. - ENGINEERING-SCIENCE, INC.
CINCINNATI, OHIO

PROJECT NAME
SEEPAGE COLLECTION & REMOVAL OF SEDIMENT
REMOVAL ACTION NO. 30

DRAWING TITLE
CIVIL
SITE DETAILS
CLEANOUT - MANHOLE

DRAWN BY	DATE	LEAD ENGINEER	DATE	CHECKED BY	DATE
K.L. RABBITT	03/28/95	ED J. KUBORN	04/12/95	K. GERARD	03/23/95

PLANT/BLDG NO.	FLOOR	SCALE	CLASS
		AS NOTED	

SUBMITTED FOR APPROVAL: H. HUME 04/13/95 DATE
FERMCO CBU APPROVAL: STEPHEN T. GARLAND 04/19/95 DATE

PROJECT LEAD PROJECT PROJECT ORDER NUMBER	DOE PROJECT NO.	TEMP PROJECT NO.	DRAWING SHEET CODE NO.	SHEET NO.	REV. NO.
CRU2/P0139	V-11	VBS 1.1.1.1.2.2.6 00-90701	92X-5900-G-00163	G0008	1

GENERAL

1. THE LISTING OF EQUIPMENT SUPPLIERS OR MATERIALS IN NO WAY PRECLUDES THE USE OF ALTERNATE SUPPLIERS OR MATERIALS FOR ANY ITEM TO BE FURNISHED WITHIN THE SCOPE OF THIS WORK. THE ITEMS AND SUPPLIERS SPECIFIED IS INTENDED TO IDENTIFY THE TYPE OF EQUIPMENT AND GENERAL QUALITY OF THAT EQUIPMENT. IT IS THE OFFERER'S RESPONSIBILITY TO PROPOSE EQUIPMENT THAT IS BEST SUITED FOR THIS PROJECT IN COMBINED TERMS OF QUALITY AND PRICE.

2. UNLESS OTHERWISE NOTED, ALL MATERIALS AND WORK SHALL CONFORM TO OHIO DEPARTMENT OF TRANSPORTATION (ODOT) CONSTRUCTION AND MATERIAL SPECIFICATIONS. DATED JANUARY 1, 1995

3. EXCESS CONSTRUCTION MATERIAL, DEBRIS AND WASTE SHALL BE DISPOSED OF IN ACCORDANCE WITH SITE STANDARD OPERATING PROCEDURE, SSOP-0044; MANAGEMENT OF SOIL, DEBRIS AND WASTE FROM PROJECT.

4. SUBCONTRACTOR SHALL FIELD VERIFY ALL LOCATIONS, DIMENSIONS, AND ELEVATIONS AND DISCREPANCIES SHALL BE RESOLVED PRIOR TO STARTING WORK. FERMCO SHALL PROVIDE AS-BUILT DRAWINGS INCLUDING INVERT AND TOP ELEVATIONS OF ALL CATCH BASINS, PUMP STATIONS. AND CLEAN OUTS AT COMPLETION OF CONSTRUCTION. AS-BUILT DRAWINGS WILL INCLUDE A FIELD RUN SURVEY PERFORMED BY A SURVEYOR REGISTERED IN THE STATE OF OHIO.

5. REFER TO THE PLANS AND DETAIL SHEETS FOR ADDITIONAL INFORMATION. FOR DRAWING INDEX, SEE DRAWING 92X-5900-X-00140.

DIVISION 2: SITE AND CIVIL ENGINEERING

02100 SITE CLEARING

PART 1 GENERAL

1.1 SITE CLEARING SHALL BE CLEARING, GRUBBING, SCALPING, REMOVAL OF TREES AND STUMPS, REMOVAL AND DISPOSING OF ALL VEGETATION AND DEBRIS, AND ROUGH GRADING OF SOIL WITHIN CONSTRUCTION LIMITS SHOWN.

1.2 IT WILL ALSO INCLUDE THE INSTALLATION OF PERIMETER SEDIMENT CONTROL MEASURES.

PART 2 MATERIAL
NOT USED

PART 3 EXECUTION

3.1 SEDIMENT CONTROL

A. INSTALL PERIMETER SEDIMENT CONTROL PRIOR TO ANY MASS CLEARING, GRUBBING, OR ROUGH GRADING.

3.2 CLEARING

A. REMOVE ONLY TREES, SHRUBS, STUMPS, AND VEGETATION AFFECTED WITHIN CONSTRUCTION LIMITS.

B. REMOVE FENCES, CURB, AND OTHER SURFACE FEATURES ALONG THE PROPOSED FORCE MAIN ROUTE NEAR THE AWWT. PROVIDE FOR TEMPORARY BARRIERS. FENCE MATERIAL SHALL BE SALVAGED TO THE EXTENT POSSIBLE AND TEMPORARILY STORED ON SITE IN A DESIGNATED AREA. REPLACE OR REPAIR FEATURES DISTURBED.

3.3 ROUGH GRADING

A. FERMCO CONSTRUCTION MANAGER WILL PROVIDE HORIZONTAL AND VERTICAL CONTROL POINTS. THE CONTRACTOR SHALL PROTECT THESE CONTROL POINTS THROUGHOUT CONSTRUCTION AND REPLACE THEM IF DAMAGED.

B. PROVIDE GRAVEL ROAD ACCESS TO WORK AREAS. THIS INCLUDES CONSTRUCTION ACCESS TO THE EXISTING ROADWAYS.

C. STRIP AND SALVAGE TOPSOIL SEPARATLY FROM SUBSOIL. SALVAGED TOPSOIL SHALL BE STOCKPILED IN AN AREA DESIGNATED BY THE FERMCO CONSTRUCTION CONTRACTS MANAGER AND PROTECTED FROM EROSION.

02200 EARTHWORK

PART 1 GENERAL

1.1 EARTHWORK SHALL INCLUDE EXCAVATION, TRENCHING, AND GRADING.

PART 2 MATERIAL
NOT USED

PART 3 EXECUTION

3.1 PREPARATION

A. THE SUBCONTRACTOR IS RESPONSIBLE FOR ALL EARTHWORK LAYOUT. VERIFY THAT SURVEY BENCHMARKS AND INTENDED ELEVATIONS FOR THE WORK ARE AS INDICATED.

B. IDENTIFY AND FLAG KNOWN UTILITY LOCATIONS WHICH EXIST IN THE CONSTRUCTION AREA. HAND PROBE TO LOCATE UNDERGROUND UTILITIES FOR ALL UTILITY POLE EXCAVATIONS, POLE GUY WIRE ANCHORS, EAST AND WEST PUMP STATIONS, AND FOR ALL UTILITY LINE CROSSINGS. PROVIDE PROTECTION FOR ALL UTILITIES IN THE WORK AREA.

C. THE SUBCONTRACTOR SHALL NOTIFY THE FERMCO CONSTRUCTION CONTRACTS MANAGER WHEN ACTUAL CONDITIONS DIFFER THAN SPECIFIED ON THE PLANS OR WHEN UNUSUAL OR UNSUITABLE SOIL CONDITIONS ARE ENCOUNTERED. THE PROBLEM SHALL BE RESOLVED PRIOR TO CONTINUING WORK.

D. SCHEDULE AND EXECUTE WORK SO THAT VEHICLE ACCESS IS MAINTAINED AT ALL TIMES THROUGH THE WORK ZONES TO THE EXTENT POSSIBLE.

E. INSTALL SEDIMENT CONTROL PRIOR TO EXCAVATION AND ROUGH GRADING. MAINTAIN CONTROLS THROUGHOUT CONSTRUCTION.

3.2 ERECTION/INSTALLATION/APPLICATION

A. EXCAVATION:

1. EXCAVATE SUBSOIL REQUIRED TO ACCOMMODATE PUMP STATIONS, ROADWAYS, REMOVAL OF SEDIMENT, AND TO ACHIEVE FINAL PROPOSED GRADE.

2. HAND TRIM EXCAVATION FOR PUMP STATIONS MANHOLES. REMOVE LOOSE MATERIAL.

3. SLOPE BANKS TO ANGLE OF REPOSE OR LESS, UNLESS SHORED.

4. STOCKPILE EXCESS SOIL ON SITE AT A LOCATION DESIGNATED BY THE FERMCO CONSTRUCTION CONTRACTS MANAGER. PROTECT THE STOCKPILE FROM EROSION.

5. CONTROL WATER BY MEANS OF DITCHES, CHECK DAMS, TEMPORARY PUMPS AND PIPING, OR OTHER METHODS ACCEPTABLE TO THE FERMCO CONSTRUCTION CONTRACTS MANAGER.

6. GRADING OF THE PROPOSED 2 HORIZONTAL:1 VERTICAL WESTERN SLOPE SOUTH FROM THE WEST PUMP STATION IS SENSITIVE AT THE TRANSITION IN TO THE EXISTING STEEP SLOPE. EXTREME CARE IS NECESSARY IN GRADING THIS AREA FOR WORKER SAFETY AND TO PREVENT ADDITIONAL SLOPE DEGRADATION.

B. TRENCHING:

1. CUT TRENCHES SUFFICIENTLY WIDE TO ENABLE INSTALLATION OF UTILITIES AND ALLOW INSPECTION. TRENCHES FOR PIPE LESS THAN 6 INCHES IN DIAMETER MAY BE EXCAVATED USING A TRENCHING MACHINE. FOLLOW PIPE MANUFACTURERS RECOMMENDATIONS.

2. HAND TRIM AS NECESSARY AND LEAVE FREE OF LOOSE MATTER.

C. BACKFILLING:

1. NO BACKFILL SHALL BE PLACED AROUND ANY CONCRETE STRUCTURE UNTIL IT HAS ATTAINED SATISFACTORY STRENGTH.

2. CUT OUT SOFT AREAS OF SUBGRADE NOT CAPABLE OF IN SITU COMPACTION. BACKFILL WITH ODOT ITEM 411 AND COMPACT TO DENSITY EQUAL TO OR GREATER THAN SUBSEQUENT FILL MATERIAL.

3. USE UNFROZEN AND UNSATURATED MATERIALS, PLACED IN CONTINUOUS LAYERS NOT EXCEEDING 8 INCHES LOOSE DEPTH. MAINTAIN OPTIMUM MOISTURE CONTENT, WITHIN 3 PERCENT, OF BACKFILL MATERIALS TO OBTAIN COMPACTION DENSITY. A LEAN CONCRETE, MINIMUM COMPRESSIVE STRENGTH OF 2,000 PSI MAY BE USED TO CORRECT OVER EXCAVATION.

4. FOR SOIL COMPACTION, MAINTAIN MOISTURE CONTENT, PLUS OR MINUS 3 PERCENT, OF OPTIMUM MOISTURE TO ATTAIN A MINIMUM DENSITY OF 95 PERCENT STANDARD PROCTOR, ASTM D698, AT ROAD CROSSINGS, MANHOLES, AND PUMP STATIONS, AND 90 PERCENT STANDARD PROCTOR AT ALL OTHER AREAS.

D. ADJUSTING AND CLEANING:

1. GRADING, FILLING, AND TOPSOIL TO BE PLUS OR MINUS 1 INCH OF INDICATED GRADE. RESHAPE AND RE-COMPACT FILLS SUBJECTED TO VEHICULAR TRAFFIC TO FINAL GRADE.

2. REMOVE SOIL STOCKPILES, LEAVING THE AREA IN A CLEAN AND NEAT CONDITION. GRADE AND STABILIZE SITE SURFACE TO PREVENT FREE STANDING SURFACE WATER.

02270 EROSION AND SEDIMENT CONTROL

PART 1 GENERAL

1.1 SECTION INCLUDES

A. THE INSTALLATION AND MAINTENANCE OF EROSION AND SEDIMENT CONTROL MEASURES.

B. TEMPORARY AND PERMANENT SEEDING.

1.2 SYSTEM DESCRIPTION

A. ITEMS TO BE PROTECTED FROM SEDIMENT DEPOSITS SHALL INCLUDE DOWN STREAM PROPERTY, WATERWAYS, STREAMS, CATCH BASINS, DITCHES, CULVERTS, AND GUTTERS

B. SUBCONTRACTOR SHALL INSTALL, MAINTAIN, AND REMOVE TEMPORARY EROSION AND SEDIMENT CONTROL MEASURES. REMOVAL REQUIRES THE APPROVAL OF THE FERMCO CONSTRUCTION MANAGER.

PART 2 MATERIAL

2.1 THE SEED MIXTURE INDICATED BELOW, BY WEIGHT, SHALL BE APPLIED AT 3 POUNDS PER 1000 SQUARE FEET, SOWN DRY OR HYDRAULICALLY.

40 PERCENT KENTUCKY BLUEGRASS (POA PRATENSIS)
40 PERCENT CREEPING RED FESCUE (FESTUCA RUBRA)
20 PERCENT ANNUAL RYEGRASS (LOLIUM MULTIFLORUM)

(EXISTING SEEDING MATERIAL LEFT OVER FROM PREVIOUS PROJECT AT THE SITE WAS UTILIZED FOR EROSION AND SEDIMENT CONTROL)

2.2 COMMERCIAL FERTILIZER SHALL BE 12-12-12 APPLIED AT 20 POUNDS PER 1000 SQUARE FEET.

2.3 AGRICULTURAL LIMING MATERIAL AND APPLICATION SHALL CONFORM TO ODOT ITEM 659.

2.4 POTABLE WATER SHALL BE USED TO CONTROL FUGITIVE DUST.

PART 3 EXECUTION

3.1 PREPARATION

A. PREPARE SUBSOIL TO ELIMINATE UNEVEN AREAS AND LOW SPOTS. MAINTAIN LINES, LEVELS, PROFILES, AND CONTOURS. MAKE CHANGES GRADUAL AND BLEND SLOPES INTO LEVEL AREAS. SCARIFY SUBSOIL TO A DEPTH OF 3 INCHES WHERE TOPSOIL IS TO BE PLACED.

B. REMOVE DEBRIS, WEEDS, ROOTS, AND UNDESIRABLE PLANTS. REMOVE CONTAMINATED SUBSOIL.

3.2 *ERECTION/INSTALLATION/APPLICATION*

A. PLACE TOPSOIL TO A DEPTH OF 4 INCHES PLUS OR MINUS 1 INCH AND RAKE SMOOTH.

B. APPLY FERTILIZER, SEED, AND MULCH PER ODOT ITEM 659. IF SOIL CONDITIONS NECESSITATE, ADD LIME PER ODOT ITEM 659.

C. SEDIMENT CONTROL

1. INSTALL EROSION AND SEDIMENT CONTROL MEASURES AND SEEDING PER ODOT ITEMS 207 AND 659.

2. PERIMETER SEDIMENT CONTROL MEASURES ARE TO BE INSTALLED PRIOR TO ANY CLEARING OR EARTHWORK.

3. THROUGHOUT THE PROJECT, OTHER SEDIMENT CONTROL MEASURES, SUCH AS STRAW BALES AROUND CATCH BASINS, DITCH CHECK, TEMPORARY SEEDING, ETC., ARE TO BE INSTALLED WHEN REQUIRED.

02720 SITE DRAINAGE AND SLOPE PROTECTION

PART 1 GENERAL

1.1 SITE DRAINAGE SHALL INCLUDE THE PROPOSED STORM DRAINS, THEIR APPURTENANCES, AND THEIR OUTFALL.

1.2 SITE DRAINAGE SHALL INCLUDE THE SEEPAGE INLET PIPE AT THE PUMP STATION MANHOLES.

1.3 SLOPE PROTECTION SHALL INCLUDE FILTER FRABIC AND SLOPE PROTECTION MATERIALS.

PART 2 MATERIAL

2.1 STORM DRAIN PIPE AND BENDS TO BE HDPE, CORRUGATED EXTERIOR, SMOOTH INTERIOR, SIMILAR TO ADVANCED DRAINAGE SYSTEMS (ADS) TYPE N-12.

2.2 SEEPAGE INLET PIPE SHALL BE HDPE SIMILAR TO ADS TYPE N-12.

2.3 FILTER FABRIC TO BE SIMILAR TO TREVIRA SPUNBOND TYPE 1125.

2.4 SLOPE PROTECTION MATERIAL SHALL BE AS SHOWN ON THE DRAWINGS.

2.5 JOINT FOR PIPES GREATER THAN 12 INCHES DIAMETER SHALL CONSIST OF CORRUGATED POLYETHYLENE SPLIT COUPLINGS WILTH CLOSED CELL NEOPRENE STRIPS THAT COMPLY WITH ASTM D1056. ALL PIPE FITTINGS SHALL MEET AASHTO M 294 STANDARDS.

2.6 JOINTS FOR PIPES LESS THAN 12 INCHES DIAMETER SHALL BE MADE WITH ADS N-12 PVC GASKETED SEWER GRADE FITTINGS.

PART 3 EXECUTION

3.1 PREPARATION

A. HAND TRIM EXCAVATIONS AND REMOVE LOOSE MATERIAL. CORRECT OVEREXCAVATION.

3.2 ERECTION/INSTALLATION/APPLICATION

A. INSTALL PIPE IN ACCORDANCE WITH MANUFACTURER'S RECOMMENDATIONS. CONNECT PIPE WITH SPECIFIED MATERIALS.

B. PIPES ARE TO BE CUT SQUARELY AND CLEANLY SO AS NOT TO *ADVERSELY AFFECT JOINING. PIPE END SHALL BE FLUSH WITH THE* INTERIOR FACE OF THE CATCH BASIN.

C. ALL COMPACTED BACKFILL SHALL BE INORGANIC MATERIAL, FREE OF ROCK OR GRAVEL OVER 3 INCHES AND FREE OF OTHER UNSUITABLE MATERIAL. BACKFILL COMPACTION TO BE 95 PERCENT STANDARD PROCTOR.

D. STONE FOR SLOPE AND CHANNEL PROTECTION SHALL BE INSTALLED IN ACCORDANCE WITH ODOT ITEM 601.

02730 SEEPAGE SYSTEM

PART 1 GENERAL

1.1 SEEPAGE SYSTEM INCLUDES THE MANHOLE FOR THE PUMP STATION, CLEANOUT AND METER MANHOLES, AND THE EFFLUENT PIPE TO THE AWWT.

1.2 THE PUMPS, CONTROLS, AND PIPING INSIDE THE PUMP STATIONS SHALL BE AS SHOWN ON DRAWING 92X-5900-G-00134.

PART 2 MATERIALS

2.1 EFFLUENT PIPE SHALL BE DUAL CONTAINMENT HDPE, DRISCOPIPE 1000 SERIES, AS MANUFACTURED BY PHILLIPS DRISCOPIPE, INC., NO SPACERS FOR BELOW GRADE PIPING. INLET AND OUTFALL PIPE SHALL BE HDPE DRISCOPIPE 1000 SERIES PIPE.

2.2 PUMP STATION, CLEANOUT MANHOLE, AND METER MANHOLE RISERS SHALL BE HDPE PERMACORE PIPE AS MANUFACTURED BY PHILLIPS DRISCOPIPE, INC. WALL THICKNESS AND SDR SHALL BE AS SHOWN ON THE DRAWINGS.

2.3 STEEL PLATE AND SHAPES SHALL BE ASTM A36 WITH ONE COAT TNEMEC SERIES 4 VERSARE PRIMER AND ONE COAT TNEMEC SERIES 6 TNEME-CRYL TOPCOAT.

2.4 OTHER MATERIALS ARE AS NOTED ON THE PLANS AND DETAILS.

PART 3 EXECUTION

3.1 PREPARATION

A. THE SUBCONTRACTOR SHALL BE RESPONSIBLE FOR LAYOUT.

B. EXISTING UTILITIES SHALL BE LOCATED AND PROTECTED PRIOR TO ANY EXCAVATION.

C. *HAND TRIM EXCAVATIONS AND REMOVE* LOOSE MATERIAL.

3.2 ERECTION/INSTALLATION/APPLICATION

A. JOINTS FOR HDPE MATERIAL SHALL BE FUSION WELDED.

B. CARRIER PIPE TO BE HYDROSTATICALLY TESTED AT 130 PSI UNLESS OTHERWISE NOTED. MAINTAIN PRESSURE FOR TWO HOURS. NO LEAKAGE ALLOWED.

C. INSTALL PIPE AND MANHOLES IN ACCORDANCE WITH THE MANUFACTURER'S RECOMMENDATIONS. USE ODOT ITEM 703.06, SAND, FOR BEDDING WHEN NATIVE SUBSOIL OF TRENCH BOTTOM IS UNSUITABLE OR FOR OVER EXCAVATION BACKFILL.

D. INSTALL WARNING BURIED EFFLUENT LINE SIGNS EVERY 250 FEET AND AT THE BEGINNING, MIDPOINT, AND END OF CURVES, BETWEEN CLEANOUT MANHOLES.

E. COMPACT BACKFILL AS SPECIFIED IN SECTION 02200, EARTHWORK.

F. MAINTAIN A 10-FOOT SEPARATION BETWEEN EXISTING POTABLE WATER LINE AND THE EFFLUENT LINE.

NOTES

1. FOR DRAWING INDEX, SEE DRAWING 92X-5900-X-00140.
2. ALL DRAWINGS CONTAIN ADDITIONAL SPECIFICATIONS AND INFORMATION.

- 7412

REF DWG NO.	DRAWING TITLE
92X-5900-X-00140	DRAWING INDEX
92X-5900-G-00134	SITE DETAILS - PUMP STATIONS

000390

REV. NO.	ISSUE OR REVISION PURPOSE - DESCRIPTION	A-E	FEMCO	DOE
1	DRAWING REVISED PER AS-BUILT CONDITIONS FROM DRAWINGS FURNISHED BY FERMCO	[illegible] 10-3-95	N/A	
0	CERTIFIED FOR CONSTRUCTION	HH 04/13/95	STG 04/19/95	

INITIALS AND DATE

UNITED STATES DEPARTMENT OF ENERGY
FERNALD ENVIRONMENTAL MANAGEMENT PROJECT

THIS DRAWING PREPARED BY
PARSONS
THE RALPH M. PARSONS CO. - PARSONS MAIN, INC. - ENGINEERING-SCIENCE, INC.
CINCINNATI, OHIO

PROJECT NAME
SEEPAGE COLLECTION & REMOVAL OF SEDIMENT
REMOVAL ACTION NO. 30

DRAWING TITLE
CIVIL SPECIFICATIONS

DRAWN BY	DATE	LEAD ENGINEER	DATE	CHECKED BY	DATE
K. GERARD	03/17/95	ED J. KUBRIN	04/12/95	E. KUBRIN	03/18/95

PLANT/BLDG. NO.	FLOOR	SCALE	CLASS
		NONE	

SUBMITTED FOR APPROVAL	FEMCO CM APPROVAL
H. HUME 04/13/95	STEPHEN T. GARLAND 04/19/95

PREPARED UNDER PARSONS PROJECT SPOOK NUMBER	DOE PROJECT NO.	TEMP PROJECT NO.	DRAWING INDEX CODE NO.	SHEET NO.	REV. NO.
CRU2/P013[illegible]	V-12	WBS 1.1.1.1.2.2.6 00-90701	92X-5900-G-00173	G0009	1

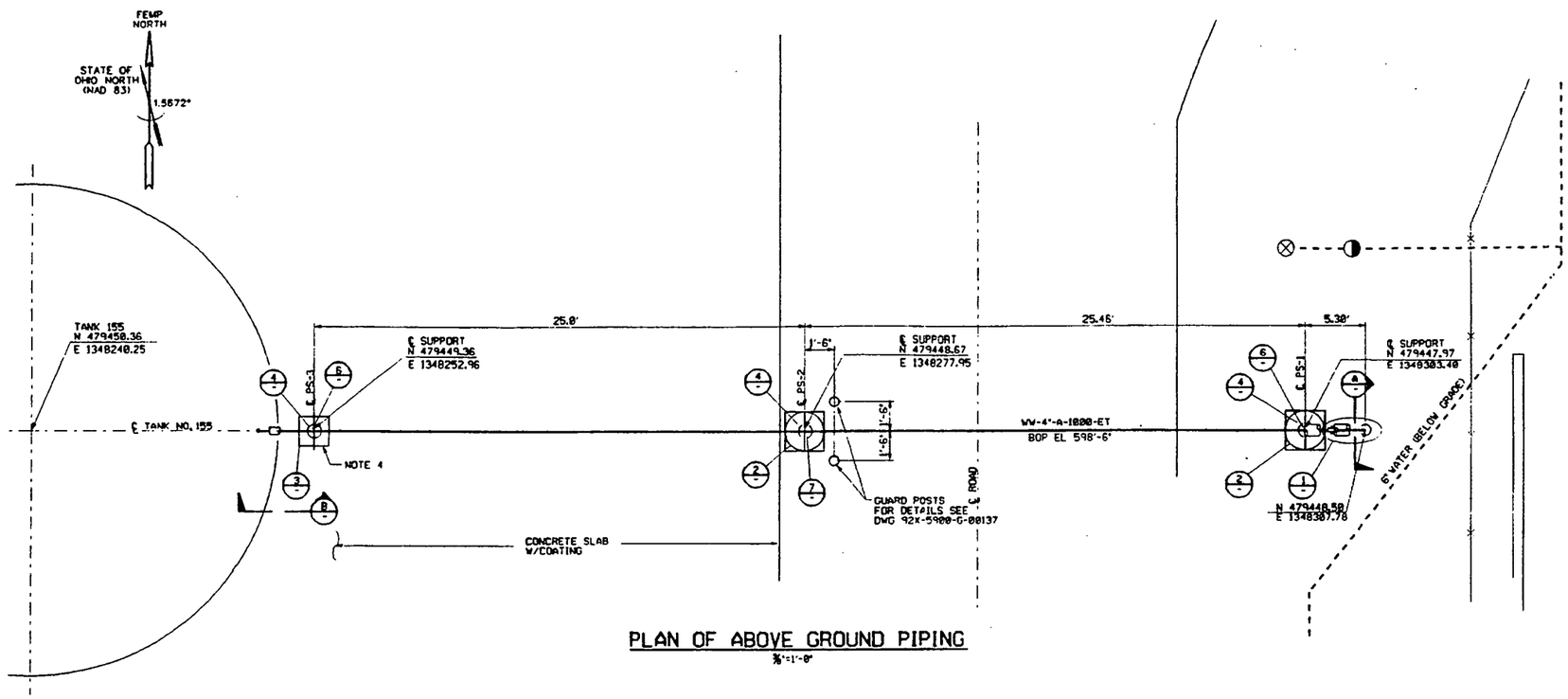

PLAN OF ABOVE GROUND PIPING

3/8"=1'-0"

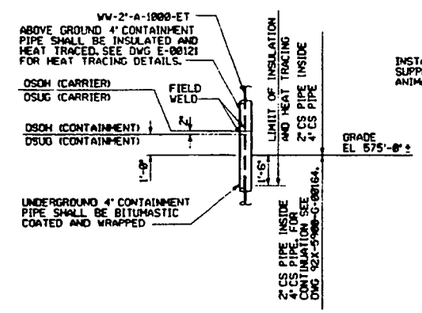

SECTION (A)
3/8"=1'-0"

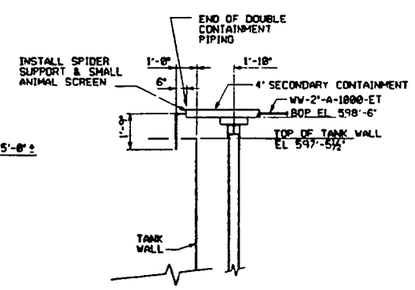

SECTION (B)
3/8"=1'-0"

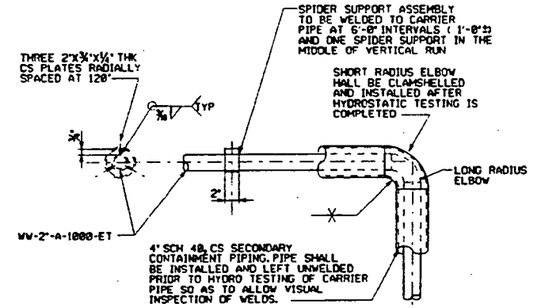

DETAIL (1)
NTS

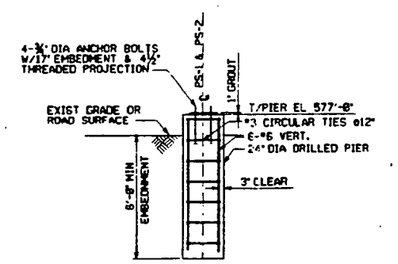

DETAIL (2)
NTS

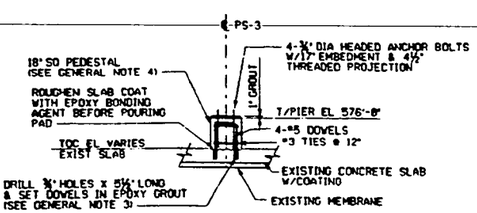

DETAIL (3)
NTS

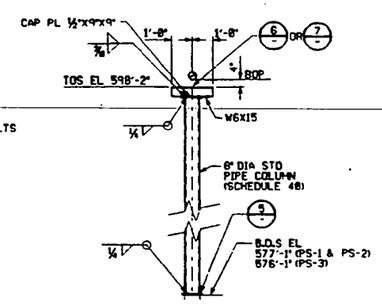

DETAIL (4)
LOOKING WEST
NTS

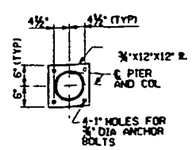

DETAIL (5)
NTS

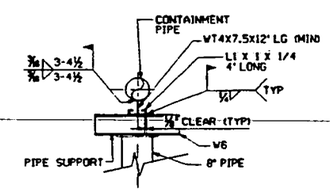

DETAIL (6)
NTS
@ PS-1 AND PS-3

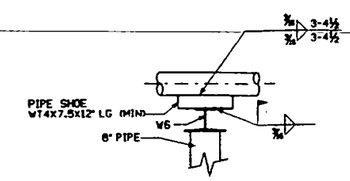

DETAIL (7)
NTS
@ PS-2

NOTES

GENERAL NOTES

1. FOR DRAWING INDEX SEE DRAWING 92X-5900-X-00140.
2. FOR PROCESS AND INSTRUMENT FLOW DIAGRAM SEE DRAWING 92X-5900-N-00143.
3. DOWEL BARS SHALL BE SET WITH CERAMIC & EPOXY GROUT BY RAMSET, MIXED AND PLACED IN ACCORDANCE WITH MANUFACTURER'S INSTRUCTIONS.
4. AFTER INSTALLATION OF CONCRETE PEDESTAL, COATING TO BE REPAIRED BY FERMCO.

PIPING SPECIFICATION NOTES

5. MATERIALS, CODE A:

   CARRIER AND CONTAINMENT PIPE SHALL BE SEAMLESS, CARBON STEEL ASTM A-106, GRADE B SCHEDULE 40, BEVELED ENDS.

   FITTINGS SHALL BE SEAMLESS CARBON STEEL BUTTWELD, ASTM A234, GRADE WPB. ELBOWS SHALL BE SHORT RADIUS.

6. FABRICATION:

   ALL WELDING ELECTRODES SHALL BE IN ACCORDANCE WITH AWS A5.1.
   CONTAINMENT PIPING SHALL BE INSTALLED AND LEFT UNWELDED UNTIL HYDROSTATIC TESTING OF THE CARRIER PIPE IS COMPLETE. PIPE SPOOLS SHALL BE ARRANGED TO INSURE VISUAL ACCESS TO CARRIER PIPE WELDS.

7. TESTING:

   CARRIER PIPE SHALL BE HYDROSTATICALLY TESTED TO 130 PSIG. THE TEST PRESSURE SHALL BE MAINTAINED FOR A MINIMUM OF TEN MINUTES PRIOR TO VISUAL INSPECTION.

   CONTAINMENT PIPING SHALL BE PNEUMATICALLY TESTED AT 15 PSI FOR A SOAP BUBBLE LEAK TEST.

8. INSULATION:

   CONTAINMENT PIPING SHALL BE INSULATED WITH 1½" OF PRE-FORMED FIBERGLASS BLOCK AND BOARD INSULATION CONFORMING TO ASTM C547/C612. INSULATED PIPE SHALL BE JACKETED WITH CORRUGATED ALUMINUM ALLOY 3003-H18, CONFORMING TO ASTM B209.

GENERAL STEEL NOTES

9. DESIGN, FABRICATION, AND ERECTION OF STRUCTURAL STEEL SHALL BE IN ACCORDANCE WITH AISC MANUAL OF STEEL CONSTRUCTION, NINTH EDITION.
10. MATERIAL SHALL MEET THE REQUIREMENTS OF THE FOLLOWING SPECIFICATIONS:

    STRUCTURAL STEEL - ASTM A36
    STRUCTURAL PIPE - ASTM A53, GRADE B

    ANCHOR BOLTS - ASTM A36 WITH HEAVY HEX NUTS AND WASHERS.
    WELDING - AWS D1.1 CLASS E70XX (ELECTRODES)
    VISUALLY INSPECT ALL WELDS

11. SHOP AND FIELD PAINTING SPECIFICATION:

    A) PREPARE SURFACES IN ACCORDANCE WITH STEEL STRUCTURES PAINTING COUNCIL (SSPC) SP-6.

    B) PRIME ALL BARE METAL NOT IN CONTACT WITH CONCRETE/GROUT WITH ZINC-RICH, LEAD FREE PRIMER APPLY TWO-COATS OF EXTERIOR LATEX GLOSS ENAMEL FOR THE FINISH COAT. FOLLOW SSPC PAINT 13 AND PAINT 20.

GENERAL CONCRETE NOTES

12. DESIGN, MATERIAL AND WORKMANSHIP SHALL BE IN ACCORDANCE WITH ACI 318-89.
13. CONCRETE SHALL HAVE A MINIMUM COMPRESSIVE STRENGTH OF 3000 PSI AT 28 DAYS.
14. REINFORCING STEEL SHALL CONFORM TO ASTM A615, GRADE 60.
15. FOUNDATION DESIGN IS BASED ON ASSUMED NET SOIL BEARING PRESSURE ALLOWABLE OF 2000 PSF. IF ANY SOFT, WET, ORGANIC, OR LOOSE SOIL OR ANY OLD FILL IS ENCOUNTERED, THE FERMCO CONSTRUCTION CONTRACTS MANAGER SHALL BE INFORMED AND THE CONDITIONS RESOLVED BEFORE CONTINUATION OF THE PROJECT.

REF DWG NO.	DRAWING TITLE
92X-5900-X-00140	DRAWING INDEX
92X-5900-N-00143	PIPING AND INSTRUMENT DIAGRAM
92X-5900-G-00164	CIVIL SITE PIPELINE PLAN
92X-5900-E-00121	ELECTRICAL PLANS
92X-5900-G-00137	CIVIL SITE DETAILS, GENERAL

000391

REV. NO.	ISSUE OR REVISION PURPOSE - DESCRIPTION			
1	DRAWING REVISED PER AS-BUILT CONDITIONS FROM DRAWINGS FURNISHED BY FERMCO	JP 11-9-95	N/A	
0	CERTIFIED FOR CONSTRUCTION	HH 04/13/95	STG 04/19/95	
		A-E	FORMAN	DATE
		DETAILS AND DATE		

UNITED STATES DEPARTMENT OF ENERGY
FERNALD ENVIRONMENTAL MANAGEMENT PROJECT

THIS DRAWING PREPARED BY
PARSONS
THE RALPH M. PARSONS CO. - PARSONS MAIN, INC. - ENGINEERING-SCIENCE, INC.
CINCINNATI, OHIO

PROJECT NAME
SEEPAGE COLLECTION & REMOVAL OF SEDIMENT
REMOVAL ACTION NO. 38

DRAWING TITLE
PIPING /PLANT DESIGN
PIPE SUPPORTS-PLAN AND DETAILS
SOUTH FIELD/FLYASH SEEPAGE COLLECTION SYSTEM

DRAWN BY	DATE	LOAD DRAWED	DATE	CHECKED BY	DATE
K.KEISNER	03/09/95	SALIM GHANTOUS	04/13/95	R. PERDON	03/21/95
PLANT/BLDG NO.		FLOOR		SCALE: AS NOTED	CLASS

SUBMITTED FOR APPROVAL: H. HUME 04/13/95
FERMCO CRU APPROVAL: STEPHAN T. GARLAND 04/19/95

PROJECT GROUP NUMBER / PROJECT GROUP NAME	FEMP PROJECT NO.	DRAWING SHEET CODE NO.	SHEET NO.	REV. NO.
CRU2/P0139	WBS 1.1.1.1.2.2 00-90701	92X-5900-P-00145	P0001	1

V-13

7412

POWER POLE COORDINATES (NAD83)

POLE NO.	NORTH	EAST	POLE NO.	NORTH	EAST
* 1	478,140.99	1,347,375.30	* 16	478,109.69	1,348,444.41
2	478,294.00	1,347,387.00	17	478,203.00	1,348,480.00
* 3	478,380.00	1,347,477.00	18	478,320.00	1,348,526.00
4	478,298.00	1,347,567.00	19	478,441.00	1,348,573.00
5	478,240.00	1,347,679.00	20	478,555.00	1,348,618.00
6	478,198.00	1,347,794.00	21	478,675.95	1,348,664.52
7	478,153.00	1,347,922.00	22	478,791.12	1,348,716.75
8	478,109.00	1,348,053.00	* 23	478,876.00	1,348,809.00
9	478,098.00	1,348,186.00	24	478,883.58	1,348,883.61
10	478,098.00	1,348,322.00	25	478,986.62	1,349,085.56
* 11	477,515.54	1,348,318.10			
12	477,574.00	1,348,336.00			
13	477,692.00	1,348,377.00			
14	477,831.00	1,348,426.00			
* 15	477,970.00	1,348,474.00			

* INDICATES POLE GUY WIRE SUPPORT REQUIRED

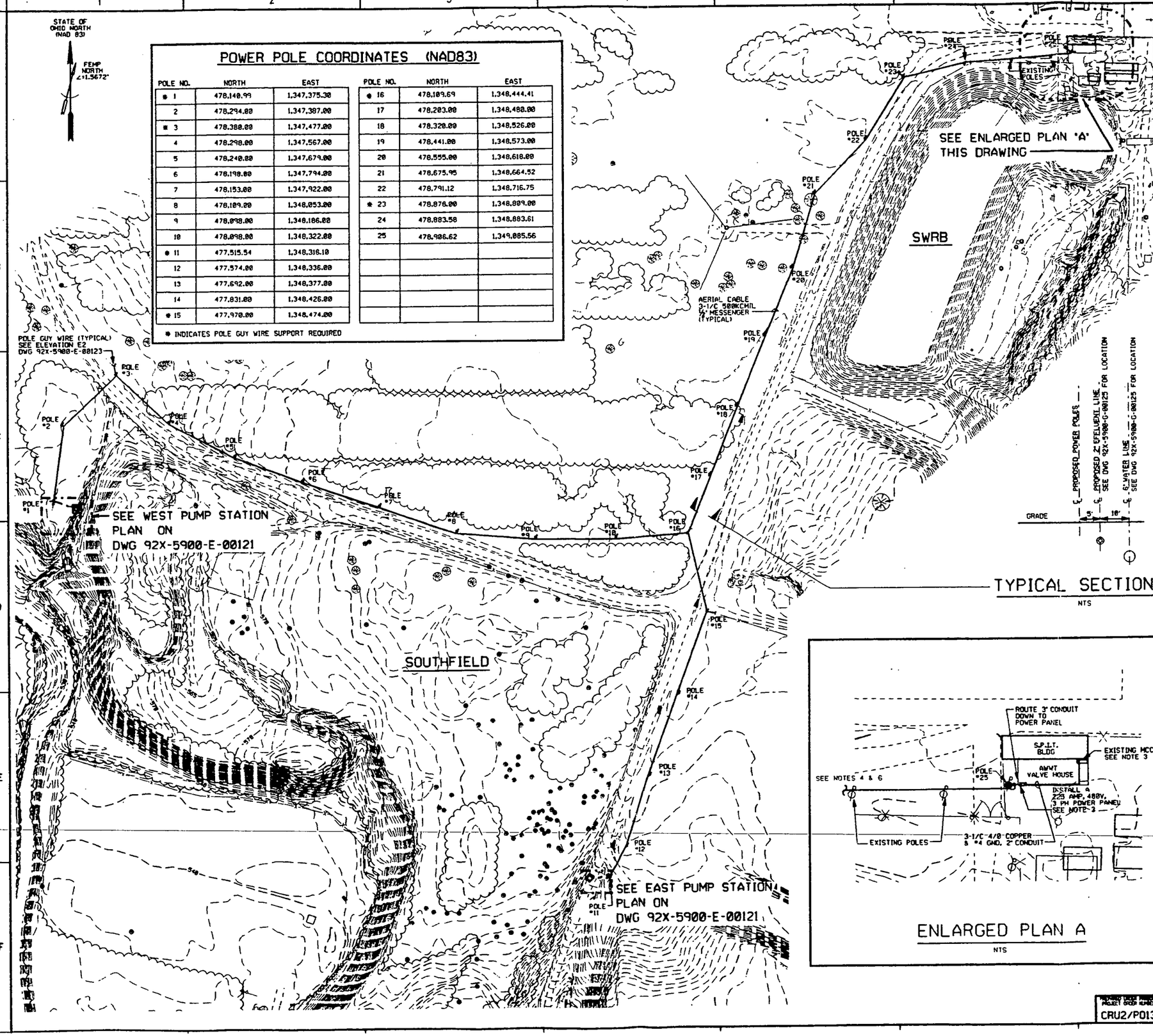

TYPICAL SECTION

NTS

ENLARGED PLAN A

NTS

NOTES:

1. SEE DRAWING 92X-5900-X-00140 FOR DRAWING INDEX.
2. SEE DRAWING 92X-5900-E-00124 FOR ELECTRICAL INSTALLATION NOTES AND EQUIPMENT DESCRIPTIONS / SPECIFICATIONS.
3. PROVIDE AND INSTALL A 225 AMP CIRCUIT BREAKER IN THE EXISTING SIEMENS MCC (PART NO. 9-001-80740-301) IN THE AWWT VALVE HOUSE.
   PROVIDE AND INSTALL A 225 AMP, 3 PHASE POWER PANEL NEAR SOUTHWEST CORNER OF THE VALVE HOUSE WITH A 150 AMP BRANCH CIRCUIT BREAKER TO FEED THE OVERHEAD POWER FEEDER.
4. INSTALL A 3-1/C 500KCMIL ALUMINUM AERIAL CABLE AS SHOWN USING 45 FOOT, CLASS 2 POLES SPACED AT 125' (MIN TO 150' MAX). INSTALL 12' AIR TERMINAL AND BUTT GROUND ON EACH POLE USING #4 SOLID COPPER BARE WIRE.
   SUBCONTRACTOR TO ADD GUY SUPPORTS TO POLES AS NECESSARY WITH THE APPROVAL OF FERMCO CONSTRUCTION MANAGER.
   SEE DRAWING 92X-5900-E-00123, ELEVATION E2 FOR TYPICAL POLE GUYING DETAILS.
5. SEE DRAWING 92X-5900-E-00122 FOR PUMP STATION SCHEMATIC, ELEVATIONS AND DETAILS.
6. 500 KCMIL CABLE SIZE IS REQUIRED FOR VOLTAGE DROP. ADDITIONAL FUTURE LOAD CAPACITY IS APPROXIMATELY 20 KVA, MAXIMUM.

LEGEND

EXISTING POLE

NEW POLE

REF DWG NO.	DRAWING TITLE
92X-5900-X-00140	DRAWING INDEX
92X-5900-E-00121	PLANS EAST & WEST PUMP STATIONS AND AWWT TANK 155
92X-5900-E-00124	INSTALLATION NOTES AND EQUIPMENT DESCRIPTIONS / SPECIFICATIONS
92X-5900-E-00122	SCHEMATIC, ELEVATIONS AND DETAILS
92X-5900-G-00125	MASTER SITE PLAN

000392

REV. NO.	ISSUE OR REVISION PURPOSE - DESCRIPTION	A-E	FERMCO	DATE
		INITIALS AND DATE		
1	DRAWING REVISED PER AS-BUILT CONDITIONS FROM DRAWINGS FURNISHED BY CONTRACTOR	MAB 1/31/01	NA	
0	CERTIFIED FOR CONSTRUCTION	HH	STO	4/13/95

UNITED STATES
DEPARTMENT OF ENERGY
FERNALD ENVIRONMENTAL MANAGEMENT PROJECT

THIS DRAWING PREPARED BY
PARSONS
THE RALPH M. PARSONS CO. - PARSONS MAIN, INC. - ENGINEERING-SCIENCE, INC.
CINCINNATI, OHIO

PROJECT NAME
SEEPAGE COLLECTION & REMOVAL OF SEDIMENT
REMOVAL ACTION NO. 38

DRAWING TITLE
ELECTRICAL
PLAN
PROJECT SITE PLAN

DRAWN BY	DATE	LEAD DRAFTER	DATE	CHECKED BY	DATE
R. PROSKI	2/17/95	T. FERRELL	4/12/95	J.L. COOPER	3/17/95

PLANT/BLDG. NO. | FLOOR | SCALE 1" = 60' | CLASS

SUBMITTED FOR APPROVAL: H. HUME 4/13/95 (DATE)
FERMCO CRU APPROVAL: STEPHEN T. GARLAND 8/19/95

PROJECT LEAD ENGINEER PROJECT SCOPE NUMBER	A-E PROJECT NO.	COMP PROJECT NO.	DRAWING SHEET CODE NO.	SHEET NO.	REV. NO.
CRU2/P0139	V-14	VBS 1.1.1.2.2.6 00-90701	92X-5900-E-00120	E0001	1

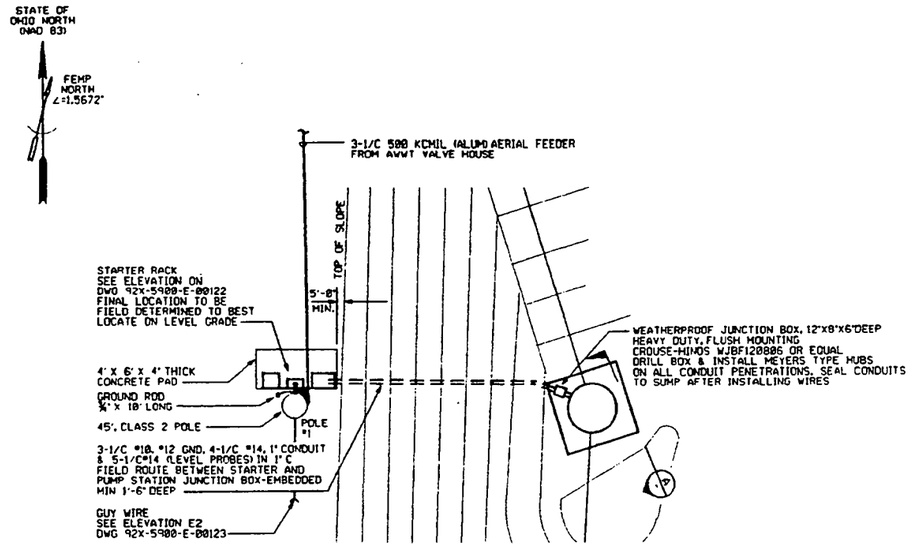

PLAN
WEST PUMP STATION
NTS

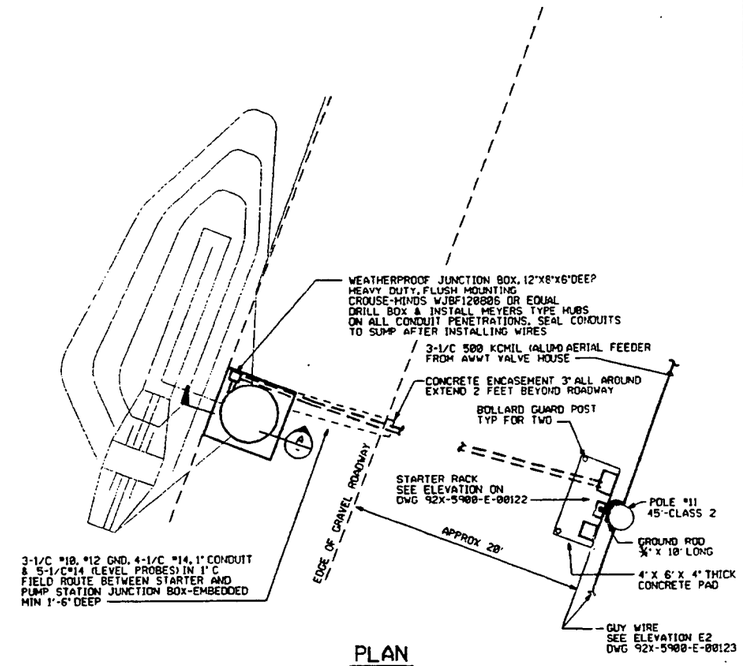

PLAN
EAST PUMP STATION
NTS

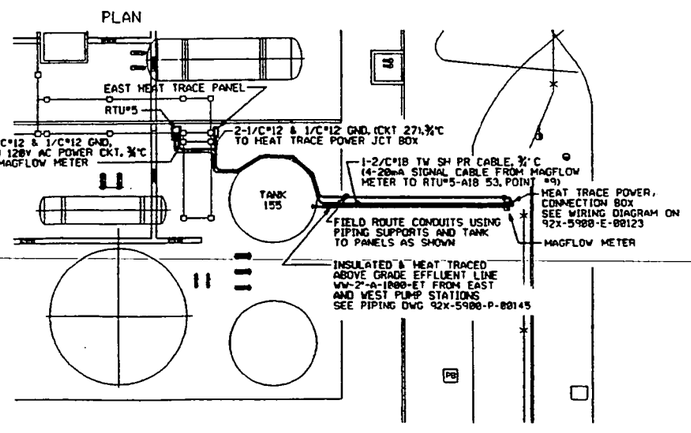

PLAN
ELECTRICAL/INSTRUMENTATION AT AWWT TANK 155
NTS

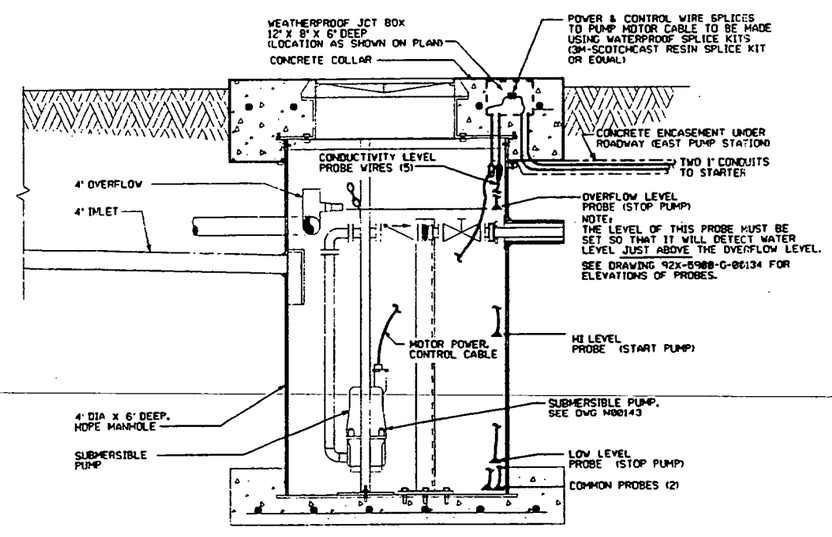

TYPICAL PUMP STATION SECTION (A)
1"=1'-0"

NOTES

1. SEE DRAWING 92X-5900-X-00140 FOR DRAWING INDEX.
2. SEE DRAWING 92X-5900-E-00124 FOR INSTALLATION NOTES AND EQUIPMENT DESCRIPTION SPECIFICATIONS.
3. CONDUITS ARE TO BE FIELD ROUTED.
4. ALL ELECTRICAL DEVICES ARE TO BE NEMA 3 (WEATHERPROOF).
5. ALL ELECTRICAL DEVICES TO BE BONDED TO GROUND ROD INSTALLED AT POWER POLE.

7412

REF DWG NO.	DRAWING TITLE
92X-5900-X-00140	DRAWING INDEX
92X-5900-E-00120	ELECTRICAL PROJECT SITE PLAN
92X-5900-E-00122	SCHEMATIC, ELEVATIONS AND DETAILS
92X-5900-E-00123	ELECTRICAL DETAILS
92X-5900-E-00124	INSTALLATION NOTES AND EQUIPMENT DESCRIPTIONS / SPECIFICATIONS
92X-5900-P-00145	PIPING SECTIONS AND DETAILS
92X-5900-G-00135	GRADING PLAN - EAST PUMP STATION
92X-5900-G-00136	GRADING PLAN - WEST PUMP STATION
92X-5900-G-00134	CIVIL - SITE DETAILS - PUMP STATION

000393

REV. NO.	ISSUE OF REVISION PURPOSE - DESCRIPTION	INITIALS AND DATE		
1	NO AS-BUILT CHANGES	MB 1/5/95	MA	
0	CERTIFIED FOR CONSTRUCTION	HH	STG	4/19/95

UNITED STATES DEPARTMENT OF ENERGY
FERNALD ENVIRONMENTAL MANAGEMENT PROJECT

THIS DRAWING PREPARED BY
PARSONS
THE RALPH M. PARSONS CO. - PARSONS MAIN, INC. - ENGINEERING-SCIENCE, INC.
CINCINNATI, OHIO

PROJECT NAME
SEEPAGE COLLECTION & REMOVAL OF SEDIMENT
REMOVAL ACTION NO. 30

DRAWING TITLE
ELECTRICAL
PLANS
EAST & WEST PUMP STATIONS AND AWWT TANK 155

DRAWN BY	DATE	LEAD DISCIPLINE	DATE	CHECKED BY	DATE
R. PROSKI	2/17/95	T. FERRELL	4/12/95	J.L. COOPER	3/17/95

PLANT/BLDG NO.	FLOOR	SCALE	CLASS
		NONE	

SUBMITTED FOR APPROVAL: H. HUME 4/13/95
FEMPCO CBD APPROVAL: STEPHEN T. GARLAND 4/19/95

PREPARED UNDER PARENT PROJECT UNDER NUMBER	DOE PROJECT NO.	TEMP PROJECT NO.	DRAWING SHEET CODE NO.	SHEET NO.	REV. NO.
CRU2/P0139	V-15	WBS 1.1.1.2.2.6 00-90701	92X-5900-E-00121	E0002	1

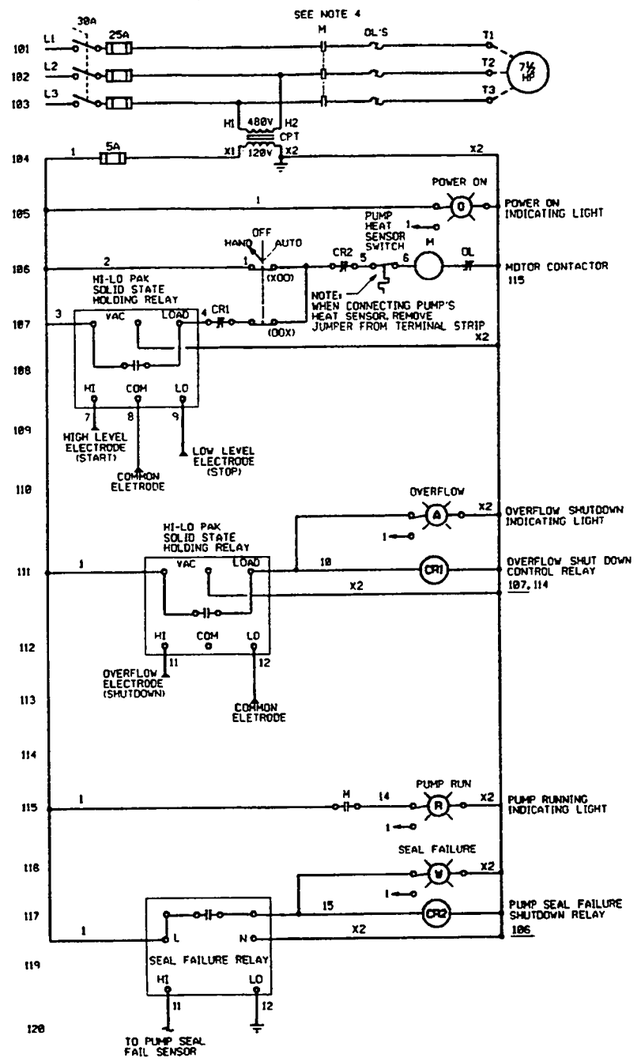

PUMP STATION SCHEMATIC

TYPICAL FOR EAST AND WEST PUMP STATIONS

CONTROL PANEL WIRING BY PUMP SUPPLIER (HYDROMATIC PUMPS, INC.)

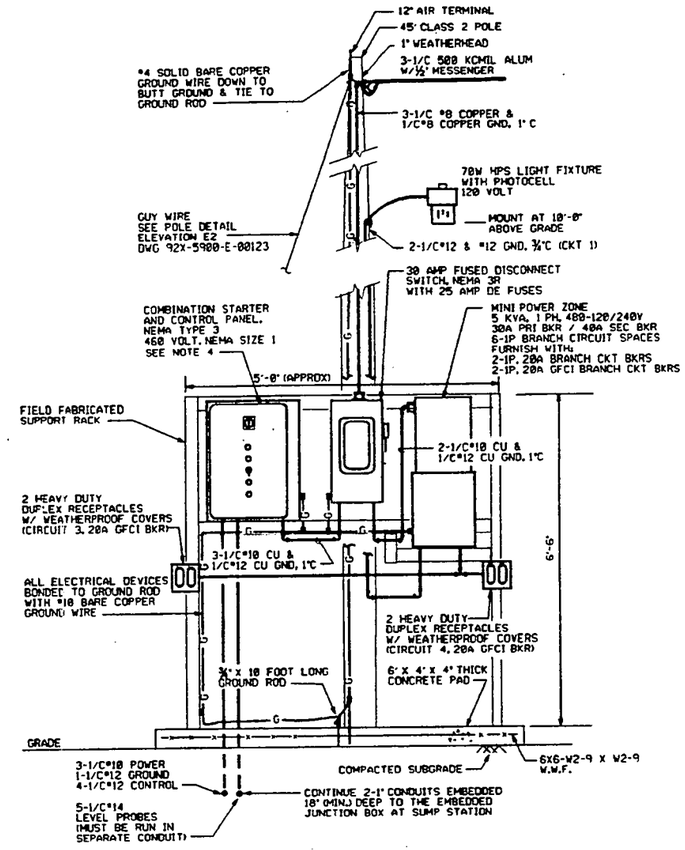

ELEVATION (E1) REF E00122 E00120

NTS

EAST PUMP STATION STARTER RACK
WEST PUMP STATION STARTER RACK

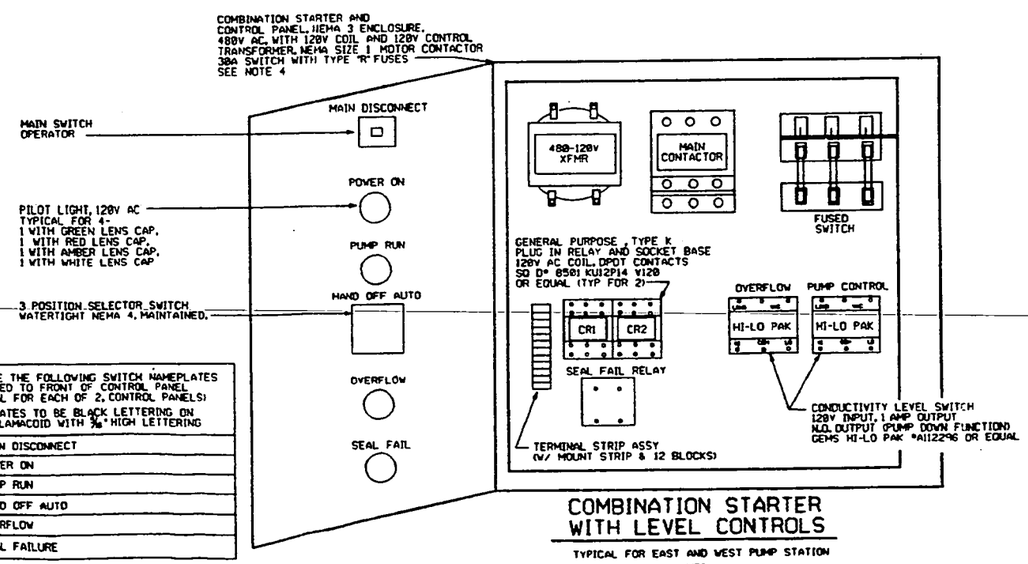

PROVIDE THE FOLLOWING SWITCH NAMEPLATES FASTENED TO FRONT OF CONTROL PANEL (TYPICAL FOR EACH OF 2, CONTROL PANELS)

NAMEPLATES TO BE BLACK LETTERING ON WHITE LAMACOID WITH ⅜" HIGH LETTERING

1	MAIN DISCONNECT
2	POWER ON
3	PUMP RUN
4	HAND OFF AUTO
5	OVERFLOW
6	SEAL FAILURE

COMBINATION STARTER WITH LEVEL CONTROLS

TYPICAL FOR EAST AND WEST PUMP STATION

NTS

NOTES

1. SEE 92X-5900-X-00140 FOR DRAWING INDEX.
2. SEE 92X-5900-E-00120 FOR ELECTRICAL SITE PLAN.
3. SEE 92X-5900-E-00124 FOR ELECTRICAL INSTALLATION NOTES AND EQUIPMENT DESCRIPTIONS / SPECIFICATIONS.
4. FURNISH NEMA 3 PANEL WITH SIZE 1 COMBINATION STARTER AND PUMP LEVEL CONTROL DEVICES. WIRED PER SCHEMATIC.

7412

REF DWG NO.	DRAWING TITLE
92X-5900-X-00140	DRAWING INDEX
92X-5900-E-00120	ELECTRICAL SITE PLAN
92X-5900-E-00123	ELECTRICAL DETAILS
92X-5900-E-00124	ELECTRICAL INSTALLATION NOTES AND EQUIPMENT DESCRIPTIONS / SPECIFICATIONS

000394

REV. NO.	ISSUE OR REVISION PURPOSE - DESCRIPTION	A-E	FERNCO	DATE
1	REVISED PER AS-BUILT CONDITIONS FROM DRAWINGS FURNISHED BY CONTRACTOR	MB 3/7/95	N/A	
0	CERTIFIED FOR CONSTRUCTION	HH	STG	4/13/95

INITIALS AND DATE

UNITED STATES DEPARTMENT OF ENERGY
FERNALD ENVIRONMENTAL MANAGEMENT PROJECT

THIS DRAWING PREPARED BY
PARSONS
THE RALPH M. PARSONS CO. - PARSONS MAIN, INC. - ENGINEERING-SCIENCE, INC.
CINCINNATI, OHIO

PROJECT NAME
SEEPAGE COLLECTION & REMOVAL OF SEDIMENT
REMOVAL ACTION NO. 30

DRAWING TITLE
ELECTRICAL
SCHEMATIC, ELEVATIONS AND DETAILS
EAST AND WEST PUMP STATIONS

DRAWN BY	DATE	LEAD ENGINEER	DATE	CHECKED BY	DATE
R. PROSKI	2/17/95	T. FERRELL	4.12.95	J.L. COOPER	3/17/95

PLANT/BLDG. NO. | FLOOR | SCALE: NONE | CLASS

SUBMITTED FOR APPROVAL: H. HUME 4/13/95 (DATE)
FERNCO CRU APPROVAL: STEPHEN T. GARLAND 4/19/95 (DATE)

PROJECT DATA BASE PROJECT (PDB) NUMBER	TOP PROJECT NO.	WBS	DRAWING INDEX CODE NO.	SHEET NO.	REV. NO.
CRU2/P0139	V-16	1.1.1.22.6 00-90701	92X-5900-E-00122	E0003	1

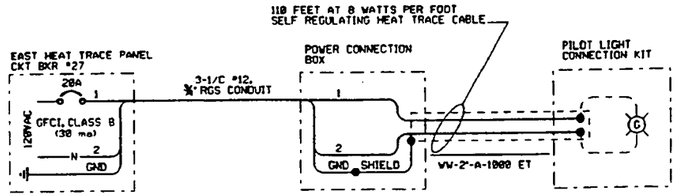

WIRING DIAGRAM FOR HEAT TRACING ABOVE GRADE PIPE TO TANK 155

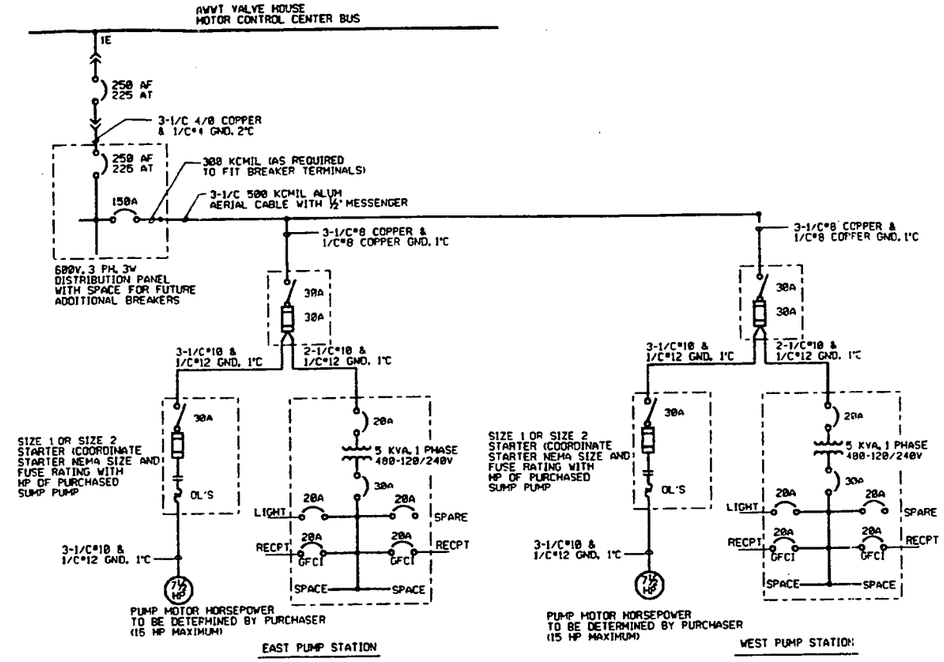

SINGLE LINE DIAGRAM

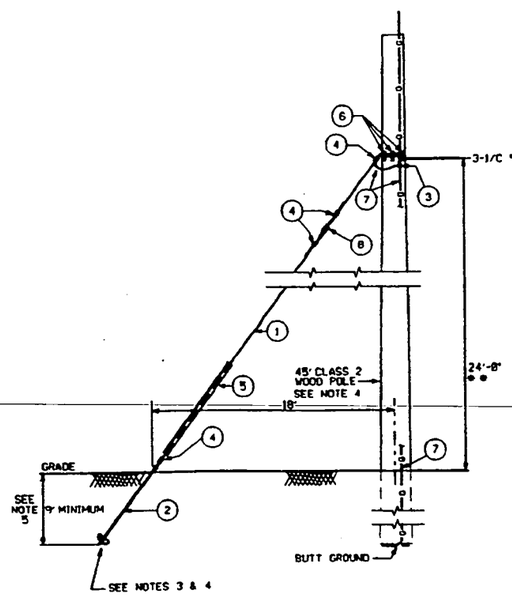

* EQUIPMENT LIST		
ITEM	QTY	DESCRIPTION
1	1	½" DIA -7X7 STANDARD CONSTRUCTION GALVANIZED STEEL STRUCTURAL ROPE
2	1	12" DIA CLASS 2, HELICAL SCREW TYPE GUY ANCHOR WITH MINIMUM PULLOUT CAPACITY OF 18000 POUNDS
3	1	COMPRESSION GROUND FITTING
4	4	GUY WIRE CLAMP
5	1	GUY WIRE MARKER
6	4	GUY HOOK, GUY PLATES
7	1	#4 BARE SOLID COPPER GROUND WIRE
8	1	STRAIN INSULATOR

* QUANTITIES GIVEN ON A PER GUY ANCHOR BASIS

** 22'-8" FOR POLE #12 ONLY.
NOTE: MAINTAIN LINE AT LOWEST SAG POINT NOT LESS THAN 16'-6" ABOVE GRADE.

TYPICAL ELEVATION (E2) E00123
NTS

REF
E00120
E00121
E00122

SEE SITE PLAN ON E00120 FOR POLE LINE ROUTING. SUBCONTRACTOR TO INSTALL GUY SUPPORTS WHERE NECESSARY ON NEW AND EXISTING POLES.

NOTES

1. SEE 92X-5900-X-00140 FOR DRAWING INDEX.
2. SEE 92X-5900-E-00121 FOR PLAN AT AWWT TANK 155.
3. POWER INSTALLED SOIL ANCHORS TO BE INSTALLED PER MANUFACTURERS INSTRUCTIONS. DEPTH ASSUMED PER SOIL DATA FOR MINIMUM BLOW COUNT 14.
4. PRIOR TO INSTALLATION OF EARTH ANCHORS OR POLES, CONTRACTOR IS TO VERIFY LOCATION OF NEARBY UNDERGROUND UTILITIES AND PUSH SMALL DIAMETER STEEL SOIL PROBE THROUGH AREA TO VERIFY THAT NO UNDERGOUND OBSTRUCTIONS ARE PRESENT.
5. INSTALL SOIL ANCHORS ACCORDING TO MANUFACTURERS INSTRUCTIONS. DEPTH CALCULATION BASED ON SOIL DATA FOR MINIMUM BLOW COUNT OF 7. IF BLOW COUNT IS LESS THAN 7, CONTACT FERMCO CONSTRUCTION MANAGER.

REF DWG NO.	DRAWING TITLE
92X-5900-X-00140	DRAWING INDEX
92X-5900-E-00121	PLANS EAST & WEST PUMP STATIONS AND AWWT TANK 155

000395

REV. NO.	ISSUE OR REVISION PURPOSE - DESCRIPTION	A-E	FERMCO	DATE
		INITIALS AND DATE		
1	REVISED PER AS-BUILT CONDITIONS FROM DRAWINGS FURNISHED BY CONTRACTOR	[illegible]	NA	
0	CERTIFIED FOR CONSTRUCTION	MH	STG	4/13/95

UNITED STATES
DEPARTMENT OF ENERGY
FERNALD ENVIRONMENTAL MANAGEMENT PROJECT

THIS DRAWING PREPARED BY
PARSONS
THE RALPH M. PARSONS CO. - PARSONS MAIN, INC. - ENGINEERING-SCIENCE, INC.
CINCINNATI, OHIO

PROJECT NAME
SEEPAGE COLLECTION & REMOVAL OF SEDIMENT
REMOVAL ACTION NO. 38

DRAWING TITLE
ELECTRICAL
ELECTRICAL DETAILS

DRAWN BY	DATE	LEAD ENGINEER	DATE	CHECKED BY	DATE
R. PROSKI	2/17/95	T. FERRELL	4/12/95	J.L. COOPER	3/17/95

PLANT/BLDG NO.	FLOOR	SCALE	CLASS
		NONE	

SUBMITTED FOR APPROVAL	FERMCO CRU APPROVAL
H. HUME 4/13/95	STEPHEN T GARLAND 4/19/95

DOE PROJECT NO.	TEMP PROJECT NO.	DRAWING SHEET CODE NO.	SHEET NO.	REV. NO.
V-17	V85 1.1.1.1.2.2.6 00-90701	92X-5900-E-00123	E0004	1

PREPARED UNDER PARSONS PROJECT ORDER NUMBER
CRU2/P0139

INSTALLATION NOTES

1. ELECTRICAL EQUIPMENT AND INSTALLATION ON THIS PROJECT SHALL BE IN ACCORDANCE WITH GUIDELINES STATED IN DOE 6430.1 SECTION 16.
2. CONDUIT ROUTINGS ARE SHOWN DIAGRAMATICALLY. LOCATE PUMP STATION CONTROL RACK AS BEST SUITED TO PUMP STATION AND FIELD CONDITIONS
3. ALL ELECTRICAL DEVICES TO BE RATED NEMA 3 (WEATHERPROOF) AND GROUNDED IN ACCORDANCE WITH THE NATIONAL ELECTRIC CODE. NFPA 70-1993.
4. DISTRIBUTION PANEL AND DISCONNECT SWITCH TERMINALS TO BE RATED FOR COPPER/ALUMINUM WIRE. ALUMINUM WIRE TO BE TERMINATED IN ACCORDANCE WITH MANUFACTURERS INSTRUCTIONS.
5. ALL WIRING SHALL BE TESTED FOR CONTINUITY. ALL 480 VOLT POWER WIRE INSULATION SHALL BE MEGGER TESTED BETWEEN EACH CONDUCTOR AND GROUND. A 1000-VOLT MEGGER SHALL BE USED FOR INSULATION RATED 600 VOLTS. MINIMUM RESISTANCE SHALL BE 100 MEGOHMS.
   TEST RESULTS SHALL BE RECORDED AND SUBMITTED TO THE FERMCO CONSTRUCTION MANAGER.
6. MOTOR WINDINGS SHALL BE CHECKED FOR CONTINUITY AND MEGGER TESTED PRIOR TO CONNECTION OF POWER LEADS. MOTOR AND PHASE ROTATION SHALL BE CHECKED WITH A PHASE ROTATION TESTER MANUFACTURED BY G. BIDDLE CO. (OR EQUAL) ON EQUIPMENT WHICH COULD BE DAMAGED BY REVERSE ROTATION.

EQUIPMENT DESCRIPTIONS / SPECIFICATIONS

GENERAL

THE LISTING OF EQUIPMENT SUPPLIERS IN NO WAY PRECLUDES THE OFFERER FROM PROPOSING ALTERNATE SUPPLIERS OF ANY OF THE EQUIPMENT TO BE FURNISHED WITHIN THE SCOPE OF THESE SPECIFICATIONS. THE SUPPLIERS LISTED IS INTENDED TO IDENTIFY THE TYPE OF EQUIPMENT USED IN THE DESIGN AND GENERAL QUALITY OF THAT EQUIPMENT. IT IS THE OFFERER'S RESPONSIBILITY TO PROPOSE EQUIPMENT THAT IS BEST SUITED FOR THIS PROJECT IN COMBINED TERMS OF QUALITY AND PRICE.

225 AMP POWER DISTRIBUTION PANEL

600 VOLT, 3 PHASE 3 WIRE SOLID NEUTRAL DISTRIBUTION PANEL SURFACE MOUNTING, TYPE 1 ENCLOSURE. 14K AIC. WITH DOOR. SQUARE D. I- LINE. CLASS 2110, TYPE HCM WITH 225 AMP MAIN BREAKER. PROVIDE 1-150 AMP, 3 POLE BRANCH CIRCUIT BREAKER.

DISCONNECT SWITCHES

FUSIBLE SWITCH ASSEMBLY IN NEMA 3R ENCLOSURE. HEAVY DUTY, 600 VOLT, 3 POLE, SOLID NEUTRAL. QUICK-MAKE QUICK-BREAK, VISIBLE BLADE, LOAD INTERRUPTER KNIFE SWITCH. DESIGNED TO ACCOMMODATE CLASS R FUSES SQUARE D. CLASS 3110. SIZE AS INDICATED ON DRAWINGS.

STARTERS

NEMA RATED COMBINATION STARTERS WITH EXTRA PANEL SPACE. NEMA TYPE 3 ENCLOSURE. NEMA SIZE 1 OR 2 (COORDINATED WITH HORSEPOWER OF PUMP MOTOR PURCHASED). 480V, 3 PHASE WITH 120 VOLT AC COIL AND 480-120VOLT CONTROL TRANSFORMER. FUSIBLE DISCONNECT TYPE WITH CLASS R FUSE CLIPS. ALLEN BRADLEY BULLETIN 512M

LEVEL CONTROLS

CONDUCTIVITY LEVEL CONTROLS ARE TO BE INSTALLED AND WIRED IN EXTRA SPACE STARTERS AS SHOWN ON DESIGN DRAWINGS. CONDUCTIVITY PROBES ARE TO BE WIRE SUSPENSION ELECTRODE TYPE, BRASS WITH SHIELD, AND TYPE SW SUSPENSION WIRE. B/W CONTROLS TYPE E-IS-SHIELDED..#6013-W5.

COMBINATION TRANSFORMER / DISTRIBUTION PANEL

INDOOR/OUTDOOR PACKAGED POWER SUPPLY, WEATHER RESISTANT ENCLOSURE SINGLE PHASE, 5 KVA, 480-240/120V WITH FULL CAPACITY TAPS 2-5% FCBN, 20A PRIMARY MAIN CIRCUIT BREAKER & 30A SECONDARY MAIN CIRCUIT BREAKER, SPACE FOR 6-1P OR 3 -2P BRANCH CIRCUIT BREAKERS. SQUARE D CAT#MP25540F
SUPPLY WITH 2-1P 20AMP AND 2-1P 20AMP GFCI (6mA) BRANCH CIRCUIT BREAKERS

LIGHTING FIXTURES

DUSK-TO-DAWN PACKAGED OUTDOOR LIGHTING FIXTURE, DIE-CAST ALUMINUM WITH 24" ALUMINUM MAST ARM. 120 VOLT AC. 70 WATT HIGH PRESSURE SODIUM LAMP AND BALLAST WITH PHOTOELECTRIC CONTROL
PACKAGED COMPLETE WITH FIXTURE, LAMP, ARM, HOOK-UP WIRE, PHOTOCONTROL AND MOUNTING HARDWARE.

AMERICAN LIGHTING / GRAYBAR CAT#11-570E5-6/PKG B

POWER CIRCUIT BREAKER

225 AMP, 3 POLE, 480 VOLT PLUG IN COMPARTMENT CIRCUIT BREAKER FOR INSTALLATION IN EXISTING SIEMENS MOTOR CONTROL CENTER (PART NO.9-001-80740-30) LOCATED IN THE AWWT VALVE HOUSE.

BASIC ELECTRICAL MATERIALS

WOOD POLES

WOOD POWER POLES SHALL TO BE 45 FOOT LONG, CLASS 2

CONDUIT

CONDUIT SHALL BE RIGID STEEL, HEAVY WALL, GALVANIZED. SIZE AS SHOWN ON DRAWINGS

RECEPTACLES

RECEPTACLES SHALL BE HEAVY DUTY, 125VOLT, 20 AMP 2 POLE, 3 WIRE GROUNDING DUPLEX RECEPTACLES. INSTALL IN CAST CONDUIT BOX WITH WEATHERPROOF LIFT COVERS.

WIRE AND CABLE

SINGLE CONDUCTOR, 600 VOLT INSULATED COPPER OR ALUMINUM CONDUCTOR FOR POWER AND LIGHTING SHALL NOT BE SMALLER THAN #12 AWG. CONDUCTORS FOR CONTROL SHALL BE STRANDED COPPER, NOT SMALLER THAN #14 AWG.
CONDUCTORS SHALL BE COLOR CODED. #6 AWG AND LARGER SHALL BE IDENTIFIED USING COLORED TAPE AT TERMINALS AND SPLICE POINTS. COLOR CODING AS FOLLOWS:

	480Y/277V	120/240V
PHASE A	YELLOW	BLACK
PHASE B	ORANGE	RED
PHASE C	BROWN	
NEUTRAL (GROUNDED)	GRAY	WHITE
GROUND	GREEN	GREEN

HEAT TRACE CABLE

HEATING CABLE SHALL BE SELF-LIMITING, PARALLEL RESISTANCE ELECTRIC TRACING CABLE. 120 VOLT WITH MAXIMUM OUTPUT TEMPERATURE 150 DEGREES F.
POWER TERMINATION KITS, TEE KITS, PILOT LIGHTS AND END SEALS SHALL BE UTILIZED WHERE APPROPRIATE.
MANUFACTURERS...RAYCHEM, CHROMOLOX OR THERMON.
INSTALL PER MANUFACTURERS INSTRUCTIONS

GROUNDING MATERIALS

GROUND ROD ELECTRODE SHALL BE COPPER-CLAD STEEL, ¾INCH DIAMETER, 10 FOOT LENGTH
POLE GROUND WIRE SHALL BE SOLID BARE COPPER WIRE, SIZE AS INDICATED ON DRAWINGS. GROUND CONDUCTORS RUN WITH POWER CABLES SHALL BE GREEN INSULATED CABLES.
SUITABLE GROUND CONNECTORS AS SUPPLIED BY BURNDY, IDEAL, ILSCO OR OTHERS SHALL BE USED FOR MAKING GROUNDING CONNECTIONS.

NOTES

1. SEE 92X-5900-X-00140 FOR DRAWING INDEX.
2. SEE 92X-5900-E-00120 FOR ELECTRICAL SITE PLAN.
3. THE PURPOSE OF THIS DRAWING IS TO CONVEY ELECTRICAL INSTALLATION REQUIREMENTS AND IDENTIFY ELECTRICAL EQUIPMENT IN LIEU OF FORMAL PROJECT SPECIFICATIONS.

7412

REF DWG NO.	DRAWING TITLE
92X-5900-X-00140	DRAWING INDEX
92X-5900-E-00120	ELECTRICAL SITE PLAN

000396

REV. NO.	ISSUE OR REVISION PURPOSE - DESCRIPTION	A-E	FERMCO	DATE
1	NO AS-BUILT CHANGES	[illegible] 12-7-95	N/A	
0	CERTIFIED FOR CONSTRUCTION			

INITIALS AND DATE

UNITED STATES
DEPARTMENT OF ENERGY
FERNALD ENVIRONMENTAL MANAGEMENT PROJECT

THIS DRAWING PREPARED BY
PARSONS
THE RALPH M. PARSONS CO. - PARSONS MAIN, INC. - ENGINEERING-SCIENCE, INC.
CINCINNATI, OHIO

PROJECT NAME
SEEPAGE COLLECTION & REMOVAL OF SEDIMENT REMOVAL ACTION NO. 30

DRAWING TITLE
ELECTRICAL
INSTALLATION NOTES AND
EQUIPMENT DESCRIPTIONS / SPECIFICATIONS

DRAWN BY	DATE	LEAD ENGINEER	DATE	CHECKED BY	DATE
R. PROSKI	2/17/95	T. FERRELL	4/12/95	J. L. COOPER	3/28/95

PLANT/BLDG. NO.	FLOOR	SCALE	CLASS
		NONE	

SUBMITTED FOR APPROVAL	FERMCO CEI APPROVAL
H. HUME 4/13/95	STEPHEN T. GARLAND 4/19/95

PROJECT/WORK AUTHORIZATION NUMBER	DOE PROJECT NO.	TEMP PROJECT NO.	DRAWING SUBJ CODE NO.	SHEET NO.	REV. NO.
CRU2/P0139	V-18	V8S 1.1.1.1.2.2.6 00-90701	92X-5900-E-00124	E0005	1

PIPING SYMBOLS

- GATE VALVE
- GLOBE VALVE
- BALL VALVE
- PLUG VALVE
- BUTTERFLY VALVE/DAMPER
- STOP CHECK
- NEEDLE VALVE
- CHECK VALVE
- SLIDING GATE VALVE
- BALL CHECK VALVE
- BACKFLOW PREVENTER
- DIAPHRAGM VALVE
- PINCH VALVE
- 3 WAY VALVE
- 3 WAY BALL VALVE
- 3 WAY PLUG VALVE
- ANGLE GATE VALVE
- ANGLE GLOBE VALVE
- FOOT VALVE
- HUB DRAIN OR FUNNEL
- DIAPHRAGM OPERATOR
- DIAPHRAGM W/ POSITIONER
- PISTON OPERATOR
- SAFETY RELIEF VALVE
- SOLENOID OPERATOR
- SELF-CONTAINED BACK PRESSURE REGULATING VALVE
- 2-WAY SOLENOID VALVE
- 3-WAY SOLENOID VALVE INDICATES DEENERGIZED SECONDARY
- 4-WAY SOLENOID VALVE
- VALVE WITH OPERATOR (VALVE TYPE UNDEFINED)
- STEAM TRAP
- HOSE QUICK COUPLING
- UNION
- DRAIN LEG
- EXPANSION JOINT
- HANDWHEEL
- EJECTOR
- STRAINER (Y TYPE)
- STRAINER (SINGLE BASKET)
- STRAINER (DOUBLE BASKET)
- STRAINER (CONE TYPE)
- STRAINER (SUCTION TYPE)
- CONCENTRIC REDUCER
- ECCENTRIC REDUCER
- ORIFICE
- VENTURI TUBE
- SIPHON TUBE
- THERMOWELL
- FLOW DIRECTION
- WELDED CONNECTION
- FLANGED CONNECTION
- FLEXIBLE HOSE
- PIPE CAP
- TIE/IN MARK
- PRIMARY
- SECONDARY
- EXISTING PIPING OR EQUIPMENT
- PACKAGED SYSTEM
- MATERIAL CODE BREAK
- INSULATION CODE BREAK
- PULSATION DAMPENER
- AIR FILTER
- FILTER LUBRICATOR REGULATOR
- AIR OPERATED DIAPHRAGM PUMP
- HORIZONTAL CENTRIFUGAL PUMP
- VERTICAL CENTRIFUGAL PUMP
- SUMP PUMP
- CHEMICAL METERING PUMP
- AGITATOR (MIXER)

ABBREVIATIONS

BTU	BRITISH THERMAL UNIT
CU FT	CUBIC FEET
GPH	GALLONS PER HOUR
GPM	GALLONS PER MINUTE
KW	KILOWATT
LB/HR	POUNDS PER HOUR
SCFM	STD. CUBIC FT/MINUTE
NO	NORMALLY OPEN
NC	NORMALLY CLOSED
FO	FAIL OPEN
FC	FAIL CLOSED
AO	AIR TO OPEN
AC	AIR TO CLOSE
IA	INSTRUMENT AIR
ET	ELECTRIC TRACED AND INSULATED
ST	STEAM TRACED AND INSULATED
EF	EXHAUST FAN
GV	GRAVITY VENTILATOR
UH	UNIT HEATER
RED	REDUCER
ECC	ECCENTRIC
TBD	TO BE DETERMINED
TF	TOP FLAT
TYP	TYPICAL
MATL	MATERIAL
MED	MEDIUM
CO	CARBON MONOXIDE
RH	RELATIVE HUMIDITY
CFM	CUBIC FEET/MINUTE
SF	SOUTH FIELD
IFA	INACTIVE FLYASH PILE
CDMH	CLEAN OUT MANHOLE
HDPE	HIGH DENSITY POLYETHYLENE
CS	CARBON STEEL

INSTRUMENTATION SPECIAL DESIGNATIONS

DESIGNATION	FUNCTION/ABBREVATION
Σ/N OR AVG	AVERAGING
± OR BI	BIAS
1:1,1:3,2:1 (TYP)	BOOST,GAIN OR ATTENUATE (INPUT:OUTPUT)
Δ OR DIF	DIFFERENTIAL
÷ OR DIV	DIVIDE
√ OR SQ.RT.	EXTRACT SQUARE ROOT
X OR MUL	MULTIPLY
N	RAISE TO POWER
REV	REVERSING
Σ OR SUM	SUMMING
L	LOW
LL	LOW LOW
H	HIGH
HH	HIGH HIGH
HL	HIGH LOW
∫	INTEGRATE (TIME INTEGRAL)
%	PROPORTIONAL
Y	UNDETERMINED COMPUTING RELAY
HOA	HAND-OFF-AUTO
⊼	EXISTING INSTRUMENT TO BE RELOCATED
I/P	CURRENT TO PNEUMATIC TRANSDUCER
RUN	RUNNING
OA	OFF-AUTO
OCA	OPEN-CLOSE-AUTO
I/O	INPUT / OUTPUT
⊛	EXISTING INSTRUMENT
UD	UP/DOWN
EW	EAST/WEST
I/I	CURRENT TO CURRENT

PIPING SPECIFICATIONS

FLOWING MEDIUM	MED CODE	MATL CODE
BACK WASH	BW	T
CHILLED WATER	CHS, CHR	A
CHLORINE	CL	B1
CONDENSATE	LC	W, T
CONDENSER WATER	CWS, CWR	A
COOLING WATER	WS, WR	A
DRAIN	DR	A, T
THICKENER OVERFLOW	TO	T
FILTRATE EFFLUENT	FT	A
FLOCCULANT	FL	A
FLUSH WATER	FW	T
FORCE MAIN	FM	M
INSTRUMENT AIR	IA	T
OFF-GAS	OG	T
NITRIC ACID	AN	T1
PERCHED GND WATER	PGW	B
PHOSPHORIC ACID	PAPH	T1
PLANT AIR	PA	W
POLISHED WATER	PW	A
POTABLE WATER	DW	W, B, B3
PROCESS WATER	TW	A
PROCESS WASTEWATER	CE	A
RAW WATER	RW	A
RECYCLE WATER	RC	T, B2
SCRUBBER RECYCLE	RSL	T
SLURRY	SL	T
SODIUM CARBONATE	SC	A
SODIUM HYDROXIDE	NA	T
SODIUM SILICATE	SS	A
STORM WATER	ST	A
SULFURIC ACID	SB	T1
SUMP DISCHARGE	SU	T
VACUUM	V	A
VENTILATION AIR	VE	T
WASTE WATER	WW	W, B4, A **

EXAMPLE:

CE-2"-A-100-ET

- MEDIUM CODE
- NOMINAL PIPE SIZE
- MATERIAL CODE
- LINE NUMBER
- HEAT TRACING AND INSULATION

A - A53,GR. A, SEAMLESS STEEL PIPE
B - PVC
B1 - PVDF
B2 - PVDF, 100 PSI
B3 - CPVC
B4 - HDPE
L - FIBERGLASS REINFORCED PLASTIC
M - DUCTILE IRON
T - 304L, STAINLESS STEEL PIPE
T1 - 316L, STAINLESS STEEL PIPE
W - A53,GR. A, GALVANIZED STEEL PIPE

** SEE NOTE 2

SINGLE LINE AIR DUCT SYMBOLS

- FAN WITH INLET VANES AND BACKDRAFT DAMPER
- BACKDRAFT DAMPER
- MOTORIZED DAMPER
- MANUAL VOLUME DAMPER

INSTRUMENT SYMBOLS

- ELECTRICAL BINARY SIGNAL
- PNEUMATIC BINARY SIGNAL
- ELECTROMAGNETIC OR SONIC SIGNAL (GUIDED)
- ELECTROMAGNETIC OR SONIC SIGNAL (NON-GUIDED)
- IA — INSTRUMENT/PLANT AIR SUPPLY
- ELECTRICAL SIGNAL
- CAPILLARY
- HYDRAULIC SIGNAL LINE
- PNEUMATIC OR VACUUM SIGNAL LINE
- INTERLOCK
- DIAPHRAGM SEAL
- FI — ROTAMETER
- FI — SIGHT GLASS
- LOCAL MOUNTED INSTRUMENT
- FRONT OF PANEL MOUNTED INSTRUMENT
- FRONT OF PANEL MOUNTED INSTRUMENT AUXILLIARY LOCATION
- REAR OF PANEL MOUNTED INSTRUMENT
- REAR OF PANEL MOUNTED INSTRUMENT AUXILLIARY LOCATION
- DIGITAL LOGIC OPERATOR INTERFACE AUXILIARY LOCATION
- DIGITAL LOGIC OPERATOR INTERFACE
- SHARED CONTROL AUXILIARY LOCATION
- SHARED DISPLAY COMPUTER CONTROL AND OPERATOR INTERFACE
- F — AIR VENT FILTER
- M — MAGNETIC FLOW METER
- POSITIVE DISPLACEMENT FLOW METER
- A*** — EQUIPMENT NUMBER

FY 102 A

- LETTERS OF IDENTIFICATION
- SPECIAL DESIGNATION
- INSTRUMENT TAG NUMBER

TYPICAL CALL OUT

LETTERS OF INSTRUMENT IDENTIFICATION

LETTER	FIRST LETTER: MEASURED OR INITIATING VARIABLE	2ND LETTER: MODIFIER	3RD OR 4TH LETTER: READ OUT OR PASSIVE FUNCTION
A	ANALYSIS	ALARM	ALARM
B	BURNER FLAME	----	----
C	CAMERA	CONTROLLER	CONTROLLER
D	DENSITY	DIFFERENTIAL	----
E	VOLTAGE	ELEMENT	ELEMENT
F	FLOW RATE	RATIO (FRACTION)	----
G	GAGING (DIM)	VIEWING DEVICE	GLASS
H	HAND (MANUAL)	----	HIGH
I	CURRENT-(ELECT)	INDICATE	INDICATE
J	POWER	SCAN	----
K	TIME	----	----
L	LEVEL	LIGHT	LOW
M	MOIST OR HUMIDITY	----	----
N	----	----	----
O	OBSERVATION	----	ORIFICE
P	PRESSURE OR VACUUM	----	POINT (TEST)
Q	QUANTITY OR EVENT	TOTALIZER	----
R	RADIOACTIVITY	RECORDER	----
S	SPEED OR FREQUENCY	SAFETY/SWITCH	SWITCH
T	TEMPERATURE	TRANSMITTER	TRANSMITTER
U	USER'S GUIDE	----	MULTIFUNCTION
V	VISCOSITY	----	VENT, VALVE
W	WEIGHT OR FORCE	WELL	----
X	UNCLASSIFIED	----	UNCLASSIFIED
Y	RELAY	RELAY	----
Z	POSITION	----	----

NOTES

1. FOR DRAWING INDEX SEE DRAWING 92X-5900-X-00140.
2. CONTAINMENT PIPE SHALL BE PROVIDED FOR EFFLUENT PIPE EXCEPT PIPE WITHIN THE HDPE MANHOLE. CONTAINMENT PIPE SIZE AND MATERIAL SHALL BE AS FOLLOWS:

CARRIER PIPE	CONTAINMENT PIPE
A. UNDERGROUND	
2" HDPE	4" HDPE
B. ABOVEGROUND	
2" CS	4" CS

2-7412

REF DWG NO.	DRAWING TITLE
92X-5900-X-00140	DRAWING INDEX

000397

REV. NO.	ISSUE OR REVISION PURPOSE - DESCRIPTION	4-E	REVISED	DATE
1	NO AS-BUILT CHANGES		NA	
0	CERTIFIED FOR CONSTRUCTION	MH	STG	4/13/95

DETAILS AND DATE

UNITED STATES DEPARTMENT OF ENERGY
FERNALD ENVIRONMENTAL MANAGEMENT PROJECT

THIS DRAWING PREPARED BY
PARSONS
THE RALPH M. PARSONS CO. - PARSONS MAIN, INC. - ENGINEERING-SCIENCE, INC.
CINCINNATI, OHIO

PROJECT NAME
SEEPAGE COLLECTION & REMOVAL OF SEDIMENT
REMOVAL ACTION NO. 38

DRAWING TITLE
MECHANICAL PROCESS
PIPING AND INSTRUMENTATION DIAGRAM
SYMBOLS AND LEGEND SHEET

DRAWN BY	DATE	LEAD ENGINEER	DATE	CHECKED BY	DATE
J. LAWSON	03/08/95	S. GHANTOUS	4/12/95	S. GHANTOUS	3/28/95

PLANT/BLDG. NO. | FLOOR | SCALE: NONE | CLASS

SUBMITTED FOR APPROVAL: H. HUME 4/13/95
FEMCO CKD APPROVAL: S. T. GARLAND 4/19/95

DOE PROJECT NO.	DATE	FEMP PROJECT NO.	DATE	DRAWING INDEX CODE NO.	SHEET NO.	REV. NO.
V-19		9S 1.1.1.1.2.2.6 00-90701		92X-5900-N-00142	N0001	1

PROPERTY OF DOE FERNALD PROJECT
PROJECT CROSS NUMBER: CRU2/P0139

7412

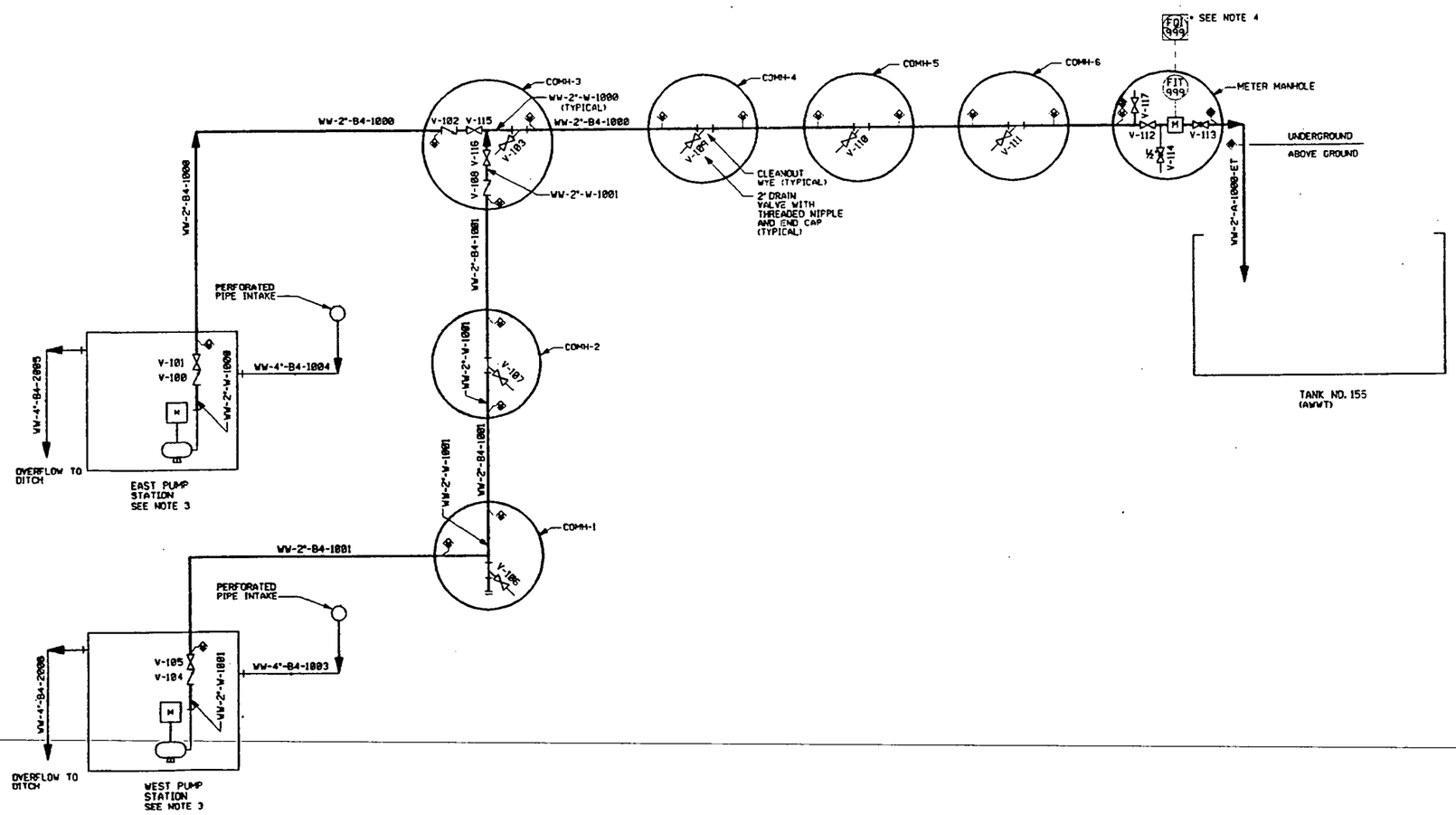

NOTES:

1. FOR DRAWING INDEX SEE 92X-5900-X-00140.
2. FOR SYMBOLS AND LEGEND SEE 92X-5900-N-00142.
3. FOR PUMP CONTROLS AND INDICATORS SEE DRAWING 92X-5900-E-00122
4. "FQI-999" IS AN EXISTING REMOTE MULTIPLEXING UNIT LOCATED IN AWWT. REFER TO DRAWING 92X-5900-N-00172 FOR SPECIFIC IDENTIFICATION.
5. PUMP SPECIFICATIONS

A. CAPACITY:

	WEST PUMP	EAST PUMP
RATED FLOW, GPM	25	25
RATED TOTAL HEAD, FT.	180	160
MOTOR HP (MAX)	15	15
MAXIMUM RPM	3450	3450

B. CONSTRUCTION:

1) PUMP
HOUSING: CAST IRON
IMPELLER: BRONZE, OPEN DESIGN FOR SOLIDS HANDLING, MULTIVANE
VOLUTE: CAST IRON, 2" DISCHARGE
SEAL: MECHANICAL TYPE
BEARINGS: BALL TYPE, PERMANENTLY LUBRICATED
SHAFT: STAINLESS STEEL

2) MOTOR
DESIGN: NEMA B
TYPE: ENCLOSED SUBMERSIBLE, OIL FILLED HOUSING
INSULATION CLASS: F
POWER SUPPLY: 460 VOLTS, 3 PHASE, 60 HERTZ
MOTOR PROTECTION: MOISTURE DETECTOR, BI-METALLIC SWITCHES IN EACH PHASE
POWER CABLE: 30 FEET, LEAKPROOF CABLE ENTRY

C. ACCESSORIES: DISCHARGE CONNECTION, GUIDE RAIL, UPPER GUIDE RAIL BRACKET, AND LIFTING CHAIN (SEE DRAWING 92X-5900-G-00134)

D. MANUFACTURER: FLYGT, ABS, HYDROMATIC, DSB, OR EQUAL

LAST VALVE NUMBER | V-117

REF DWG NO.	DRAWING TITLE
92X-5900-X-00140	DRAWING INDEX
92X-5900-E-00122	SCHEMATIC, ELEVATIONS, AND DETAILS
92X-5900-G-00134	SITE DETAILS
92X-5900-N-00142	SYMBOLS AND LEGEND SHEET
92X-5900-N-00172	FLOW METER LOOP, DETAILS AND MISCELLANEOUS

000398

REV. NO.	ISSUE OF REVISION PURPOSE - DESCRIPTION	A-E	FERNCO	DATE
1	REVISED PER AS-BUILT CONDITIONS FROM DRAWINGS FURNISHED BY CONTRACTOR	[illegible]	[illegible]	
0	CERTIFIED FOR CONSTRUCTION	HH	STG	4/13/95

UNITED STATES DEPARTMENT OF ENERGY
FERNALD ENVIRONMENTAL MANAGEMENT PROJECT

THIS DRAWING PREPARED BY
PARSONS
THE RALPH M. PARSONS CO. - PARSONS MAIN, INC. - ENGINEERING-SCIENCE, INC.
CINCINNATI, OHIO

PROJECT NAME
SEEPAGE COLLECTION & REMOVAL OF SEDIMENT
REMOVAL ACTION NO. 38

DRAWING TITLE
MECHANICAL PROCESS
PIPING AND INSTRUMENTATION DIAGRAM
SF/IFP SEEPAGE COLLECTION SYS

DRAWN BY	DATE	LEAD ENGINEER	DATE	CHECKED BY	DATE
J. LAWSON	03/08/95	S. CHANTOUS	4/13/95	S. CHANTOUS	3/28/95

PLANT/BLDG. NO. | FLOW | SCALE: NONE | SIZE

SUBMITTED FOR APPROVAL: H. HUME 4/13/95 (DATE)
FERNCO CRU APPROVAL: S. T. GARLAND 4/19/95 (DATE)

PROJECT WORK REQUEST PROJECT WORK NUMBER	DOE PROJECT NO.	TOP PROJECT NO.	DRAWING SHEET CODE NO.	SHEET NO.	REV. NO.
CRU2/P0139	V-20	WBS 1.1.1.1.2.2.6 00-90701	92X-5900-N-00143	N0002	1

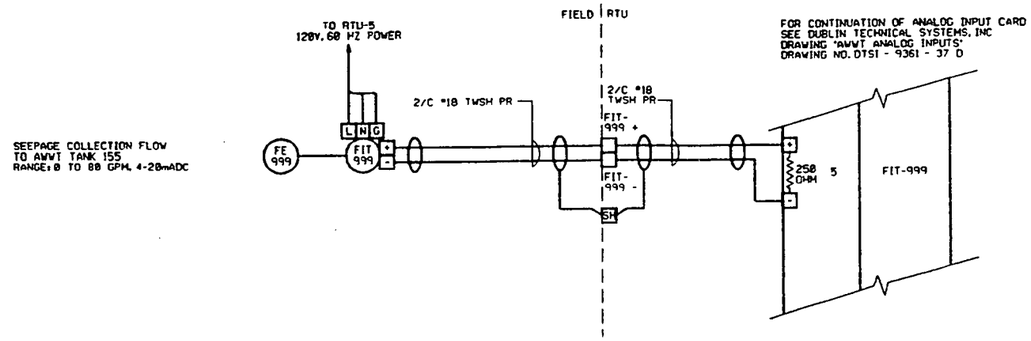

FIT-999 LOOP

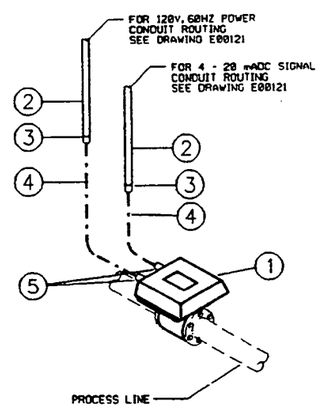

FIT-999
INDICATING FLOWMETER - MAGNETIC
WAFER STYLE

BILL OF MATERIAL

ITEM#	QUANTITY REQUIRED (NOTE 2)	UM	DESCRIPTION	NOTES	VENDOR CAT. NO.
1	1	EA	INDICATING MAGNETIC FLOW METER		FISCHER-PORTER: 10D-1475
2	AS REQ'D	FT	CABLE, ¾" CONDUIT AND FITTINGS		
3	2	EA	¾" NPT TO ½" LIQUID-TIGHT FLEX CONN.		
4	4 NOM.	FT	½" LIQUID-TIGHT FLEX CONDUIT		
5	2	EA	½" NPT TO ½" LIQUID-TIGHT FLEX CONN.		

INDICATING FLOWMETER MAGNETIC - WAFER STYLE SPECIFICATIONS

LOOP TAG NO.		FIT-999
SERVICE		SEEPAGE COLLECTION
		METERING
LINE NO		WW-2"-A-1000-ET
P&ID NO		92X-5900-N-00143
SERVICE CONDITIONS		
FLUID		WASTE WATER
NORMAL FLOW		50 GPM
FLOW	MAX./MIN.	80/20 GPM
TEMPERATURE	MAX./MIN.	90/40°F
PRESSURE	MAX./MIN.	80/15 PSI
VELOCITY	MAX./MIN.	7.7/1.9 FT/SEC
CONDUCTIVITY	NORM./MIN.	>30 MICROMHOS/CC
SPECIFIC GRAVITY	MAX./NORM.	1.1/1.0 GR/CC
% SOLIDS	MAX./NORM.	2/1
MEASURING ELEMENT		
TUBE SIZE, SCHED.		2", SCHED.40
LINER MATERIAL		NOTE 5
END CONNECTIONS/TYPE MATERIAL		WAFER/NA
ELECTRODE MATERIAL		NOTE 6
METER CASING		MFG. STD.
GROUNDING TYPE/MATERIAL		INTERNAL/MFG. STD.
TRANSMITTER		
OUTPUT SIGNAL		4-20 mADC
CALIBRATED FLOW RANGE		0-80 GPM
CONDUIT CONN. SIZE		¾"NPT
MOUNTING		INTEGRAL
ENCLOSURE CLASS		NEMA 4X
POWER REQUIREMENT/ELECT. CODE		120V, 60HZ, GENERAL
INTEGRATOR		YES
ZERO RETURN		YES
ALARMS		NO
SPECIAL MODIFICATION		NO
EXTRA FEATURES OR REQUIREMENTS		NOTE 4

NOTES

1. CONTRACTOR SHALL PROVIDE ALL MISCELLANEOUS HARDWARE INCLUDING FITTINGS NOT IDENTIFIED IN THE BILL OF MATERIAL, IN ORDER TO PROVIDE A COMPLETE ASSEMBLY.
2. QUANTITIES ARE FOR ESTIMATES ONLY. ACTUAL QUANTITIES SHALL BE FIELD DETERMINED.
3. FOR DRAWING INDEX SEE DRAWING 92X-5900-X-00140.
4. FLOW INDICATOR SHALL BE MOUNTED SO THAT IT CAN BE VIEWED FROM THE TOP.
5. ACCEPTABLE MATERIALS OF CONSTRUCTION FOR THE LINER ARE CERAMICS AND TEFZEL.
6. ACCEPTABLE MATERIALS OF CONSTRUCTION FOR THE ELECTRODES ARE 316 SST, ZIRCONIUM AND PLATINUM.

7412

REF DWG NO.	DRAWING TITLE
92X-5900-X-00140	DRAWING INDEX
92X-5900-N-00143	MECHANICAL - PIPING AND INSTR. DIAGRAM
DTSI-9361-37D	DUBLIN TECHNICAL SYSTEMS, INC. AWWT ANALOG INPUTS
92X-5900-E-00121	ELECTRICAL-PLANS, EAST AND WEST PUMP STATIONS AND AWWT TANK 155

000399

REV. NO.	ISSUE OR REVISION PURPOSE - DESCRIPTION	A-E	PERFORM	DATE
1	DRAWING REVISED PER AS-BUILT CONDITIONS FROM DRAWINGS FURNISHED BY FERMCO	MAB 10-2-95	N/A	
0	CERTIFIED FOR CONSTRUCTION	HH	STG	4/13/95

UNITED STATES DEPARTMENT OF ENERGY
FERNALD ENVIRONMENTAL MANAGEMENT PROJECT

THIS DRAWING PREPARED BY
PARSONS
THE RALPH M. PARSONS CO. - PARSONS MAIN, INC. - ENGINEERING-SCIENCE, INC.
CINCINNATI, OHIO

PROJECT NAME
SEEPAGE COLLECTION & REMOVAL OF SEDIMENT
REMOVAL ACTION NO. 38

DRAWING TITLE
INSTRUMENTATION
FLOW METER LOOP,
AND MISCELLANEOUS DETAILS

DRAWN BY	DATE	LEAD DRAFTER	DATE	CHECKED BY	DATE
C.LINHARDT	03-17-95	C.A. LINHARDT	4/12/95	J. COOPER	3/21/95

PLANT/BLDG. NO. | FLOW | SCALE: NONE | CLASS

SUBMITTED FOR APPROVAL: H. HUME 4/13/95
FERMCO CKD APPROVAL: S. T. GARLAND 4/19/95

PROPERTY DISPOSITION PROJECT ORDER NUMBER	REF. ANALYSIS NO.	TEMP PROJECT NO.	DRAWING SHEET CODE NO.	SHEET NO.	REV. NO.
CRU2/P0139	V-21	WBS 1.1.1.2.2.6 00-90701	92X-5900-N-00172	N0003	1