3482

LEACHATE MANAGEMENT CONTINGENCY PLAN

FOR THE ON-SITE DISPOSAL FACILITY

FERNALD ENVIRONMENTAL MANAGEMENT PROJECT
FERNALD, OHIO

January 18, 2001

U. S. DEPARTMENT OF ENERGY

FERNALD AREA OFFICE

20110-PL-0002
DRAFT REVISION 2

REVISION SUMMARY

Revision	Date	Description of Revisions
Rev. 0	June, 1998	Initial issuance of the Leachate Management Contingency Plan for the OSDF
Rev. 1	November, 1998	Incorporate regulatory comments to Rev. 0
Rev. 2 Draft	January, 2001	Revise plan to address new EPLTS configuration and lessons learned from implementation of previous plan

TABLE OF CONTENTS

List of Figures ii

List of Tables ii

Appendices ii

List of Acronyms iii

1.0 Purpose 1

2.0 Background 1

3.0 Drivers for Implementing the Contingency Plan 2

3.1 Action Levels for Failure of an LDS, LCS, RLCS or LTS Pipe Segment 2

3.2 Failure of an LDS, LCS, or RLCS Pipe Segment 3

3.3 Investigation/Failure of an LTS Pipe Segment 3

3.4 Failure of the PLS 4

3.5 Failure of the Leachate Conveyance System 4

4.0 Contingency Plan 6

4.1 Temporary Operating Mode A 6

4.1.1 Temporary Operating Mode A1 7

4.1.2 Temporary Operating Mode A2 7

4.1.3 Temporary Operating Mode A3 8

4.2 Temporary Operating Mode B 8

4.2.1 Temporary Operating Mode B1 8

4.2.2 Temporary Operating Mode B2 9

4.2.3 Temporary Operating Mode B3 10

4.3 Temporary Operating Mode C 10

4.3.1 Temporary Operating Mode C1 10

4.3.2 Temporary Operating Mode C2 11

4.3.3 Temporary Operating Mode C3 11

4.4 Temporary Operating Mode D 11

4.5 Temporary Impacted Runoff Management 12

5.0 Deliverables 13

LIST OF FIGURES

Figure 1 Schematic - Leachate Management System
Figure 2 Plan Temporary Operating Mode A1
Figure 3 Plan - Temporary Operating Mode B1
Figure 4 Plan – Temporary Operating Mode C1
Figure 5A Schematic - Temporary Operating Mode D
Figure 5B Plan - Temporary Operating Modes D
Figure 6 Schematic - Modified ILTS

LIST OF TABLES

Table 1 LDS, LCS, RLCS, and LTS Action Levels 5

APPENDICES

Appendix A Calculations – LDS, LCS, RLCS, and LTS Action Levels
Appendix B Pressure Test Criteria

LIST OF ACRONYMS

ARAR	applicable or relevant and appropriate requirement
ARWWP	Aquifer Restoration/Wastewater Project
AWWA	American Water Works Association
AWWT	Advanced Waste Water Treatment
BSL	Biodenitrification Surge Lagoon
CVH	Control Valve House
DOE	Department of Energy
EPA	U. S. Environmental Protection Agency
EPLTS	Enhanced Permanent Leachate Transmission System
FEMP	Fernald Environmental Management Project
gpm	gallons per minute
LCS	Leachate Collection System
LDS	Leak Detection System
LMS	Leachate Management System
LTS	Leachate Transmission System
OAC	Ohio Administrative Code
OEPA	Ohio Environmental Protection Agency
OSDF	On-Site Disposal Facility
PLS	Permanent Lift Station
RLCS	Redundant Leachate Collection System
VH	Valve House

1.0 PURPOSE

The purpose of this plan is to specify measures to be taken in the event of a failure of the On-Site Disposal Facility Leachate Management System.

2.0 BACKGROUND

The On-Site Disposal Facility (OSDF) is being constructed at the Fernald Environmental Management Project (FEMP) to contain contaminated soil and debris generated during remediation of the site. The OSDF includes a Leachate Management System (LMS) consisting of: a Leachate Collection System (LCS) and a Redundant LCS (RLCS) that collect leachate and impacted runoff from each OSDF cell, a Leak Detection System (LDS) which collects leak detection water from each OSDF cell, a Leachate Transmission System (LTS) which conveys the collected water by gravity to a Permanent Lift Station (PLS), and a Leachate Conveyance System (force main) from the PLS to the Biodenitrification Surge Lagoon (BSL). The BSL provides for temporary holding of the water until it is transferred and treated at the Advanced Wastewater Treatment (AWWT) Phase II Facility as described in the "Operations and Maintenance Master Plan for the Aquifer Restoration and Wastewater Project." Following treatment, the leachate is discharged to the Great Miami River.

The contingency plan described below will be implemented at the direction of the Aquifer Restoration/Wastewater Project (ARWWP), Project Manager in the event that, as defined in Section 3 - "Drivers For Implementing Contingency Plan," the Leachate Management System (LMS), is not fully operational for an extended period of time or a section of the piping within the LMS experiences a defined failure. Due to the undefined scope and the uncertainties associated with the details of future construction and waste placement phases for the OSDF, this revision of the contingency plan only addresses operation of the LMS through construction and pre-closure of the cells 1 through 6.

Figure 1 presents a schematic of the Leachate Management System (LMS) which consists of the following:

- one valve house (VH) for each of OSDF Cells 1-6 and three gravity pipelines from each cell to its VH. The three lines are: leachate collection system (LCS), redundant leachate collection system (RLCS), and leak detection system (LDS);
- a series of approximately 400-foot LTS gravity pipeline segments (PS) between adjacent VHs (PS-1, PS-2, PS-3, PS-4 and PS-5);
- approximately 1450-foot LTS gravity pipeline segment (PS-6) from VH-6 to the Control Valve House (CVH);
- approximately 1450-foot Interim Leachate Transmission System (ILTS) gravity pipeline segment (PS-8) from VH-6 to the CVH;
- approximately 40-foot LTS gravity pipeline segment (PS-7) from the CVH to the PLS;
- the PLS which contains duplex pumps; and level controls;
- an approximately 5200-ft Leachate Conveyance System from the PLS to the BSL.

The footprint of each cell, including an approximately one-acre impacted runoff catchment area, is approximately seven acres. The water collected in the LCS consists of two streams: 1) water which infiltrates through the cell into the LCS is defined as leachate; and 2) stormwater which flows off the surface of the stored waste and is collected in the impacted runoff catchment area is defined as impacted runoff.

3.0 DRIVERS FOR IMPLEMENTING THE CONTINGENCY PLAN

The basis for determining when the Contingency Plan will be implemented will be as follows:

3.1 ACTION LEVELS FOR FAILURE OF LDS, LCS, RLCS OR LTS PIPE SEGMENT

The LDS, LCS, and RLCS pipes from the OSDF liner system to the Valve Houses for each cell consist of double-wall high density polyethylene (HDPE) pipes (i.e., inner carrier pipes and outer containment pipes). Similarly, the LTS pipe segments between VHs, CVH, and PLS are also double contained. LDS, LCS, and RLCS containment pipe and each segment of the LTS containment pipeline are monitored for the accumulation of liquid on a weekly basis. The volume of water (combination of condensation, possible perched water infiltration, and/or carrier pipe leakage) removed from each containment pipe segment is recorded.

Table 1 presents the potential acceptable monitored volumes for an LDS, LCS, RLCS and or LTS pipe segments, which is the theoretical limit (given the expected operating pressure and temperature conditions) at which HDPE piping can be tested for soundness by the American Water Works Association (AWWA) test acceptance standards. Appendix A gives a detailed explanation of how Table 1 was developed.

The minimum potential volumes listed in Table 1 (i.e., the volumes for a week during which no maximum days of pumping occurred at the PLS) are as follows:

LDS = 0.6 gallon/week
LCS = 0.7 gallon/week
RLCS = 0.7 gallon/week
LTS (PS-1 through PS-5)= 1.4 gallons/week
LTS (PS-6) = 5.0 gallons/week
LTS (PS-7) = 0.1 gallon/week

These weekly volumes will be conservatively defined "action levels" for the LCS, LDS, RLCS, and LTS pipe segments. If the weekly containment piping inspections indicate a measured quantity less than these action levels, the data will be logged and noted as < minimum; and no further action will be taken. If a volume greater than these action levels is measured, an investigation of the pipe segment in question will commence as discussed below. At the same time, the actual operating conditions will be evaluated by ARWWP staff to determine if the measured quantity exceeds the potential theoretical limit (Table 1) under the actual weekly operating conditions experienced.

3.2 FAILURE OF AN LDS, LCS, OR RLCS PIPE SEGMENT

If a weekly action level is exceeded for a LDS, LCS, or RLCS pipe segment; the instructions contained in the "Systems Plan, Collection and Management of Leachate for the On-Site Disposal Facility" will be followed.

3.3 INVESTIGATION/FAILURE OF AN LTS PIPE SEGMENT

If a weekly action level for a segment of the LTS pipeline is exceeded, a pressure investigation test will be conducted on the pipeline segment in question. In order to perform the test, upstream LTS pipe segments will have to be shutdown. This test will be initiated within 48 hours of an exceedence of a weekly action level. Appendix B, contains the criteria and plan to be followed for the pressure test.

The pressure investigation test is a repeat of the EPLTS Design Specifications and Construction Acceptance Test criteria. The suspect pipe segment will be tested against these criteria to determine if the pipe has developed a failure. In the questionable segment, both the carrier and containment pipes will be tested. If the test determines the pipes are in compliance with the design specifications, the system will be returned to normal operations and a revised LTS action level will be proposed and agreed to by all interested parties (i.e., USEPA, OEPA, DOE, and Fluor Fernald). If a suspect LTS carrier or containment pipe section fails to meet the EPLTS Design Specification and Construction Acceptance Test criteria, the appropriate Temporary Operating Mode (Modes A, B, or C) applicable to the failure experienced will be implemented as described in Section 4.

3.4 FAILURE OF THE PLS

A failure of the PLS will be defined as the inability to pump collected water for a period of time exceeding 48 hours. This could be the result of pump failure, automatic valve failure, a leak in the PLS, etc. If a failure has occurred, Temporary Operating Mode D will be implemented as described in Section 4.

3.5 FAILURE OF THE LEACHATE CONVEYANCE SYSTEM

The Leachate Conveyance System from the PLS to the BSL consists of double-wall HDPE pipe (i.e., inner carrier pipe and outer containment pipe). The containment piping is divided into three sections by manholes. These manholes are located at low points along the main. Condensate and/or leakage flows to these low points in each section via gravity. Monitoring of the volume of water that accumulates at these manholes is performed on a monthly basis per procedure 43-C-365 "Leachate System Operation."

In addition to the monitoring of the liquid collected in these three manholes, flow meters were installed near the PLS and BSL (i.e., beginning and end of the Leachate Conveyance System pipeline). In the event that the differential reading between these meters exceeds 10 percent, an alarm is sounded to indicate potential unacceptable leakage from the carrier pipe.

If a failure has occurred, Temporary Operating Mode D will be implemented as described in Section 4.

TABLE 1

LDS, LCS, RLCS, and LTS ACTION LEVELS

	Volume (gal/week)								
			LCS						
No. of Days PLS at Maximum Pumping*	LDS	LCS & RLCS	VH1-VH2 PS-1	VH2-VH3 PS-2	VH3-VH4 PS-3	VH4-VH5 PS-4	VH5-VH6 PS-5	VH6-CVH PS-6	CVH – PLS PS-7
7	0.6	1.0	3.0	3.7	4.4	5.1	5.8	26.1	0.1
6	0.6	1.0	2.8	3.4	4.0	4.6	5.2	23.1	0.1
5	0.6	0.9	2.5	3.0	3.6	4.1	4.6	20.1	0.1
4	0.6	0.9	2.3	2.7	3.1	3.5	3.9	17.1	0.1
3	0.6	0.8	2.1	2.4	2.7	3.0	3.3	14.0	0.1
2	0.6	0.8	1.9	2.1	2.3	2.5	2.7	11.0	0.1
1	0.6	0.7	1.6	1.7	1.8	1.9	2.0	8.0	0.1
0	0.6	0.7	1.4	1.4	1.4	1.4	1.4	5.0	0.1

*Days in 7 day period during which PLS ran at full capacity [i.e., documented flow exceeds 306,720 gallons per day (212 gallons/minute)]

4.0 CONTINGENCY PLAN

While this plan contains the drivers which define a failure of an individual cell's LCS, RLCS, or LDS pipeline, the management of those failures is addressed in the "Systems Plan, Collection and Management of Leachate for the On-Site Disposal Facility". This contingency plan addresses a failure in the remaining portions of the LMS, those portions used to convey the collected water from each cell's Valve House to the BSL [i.e., LTS, PLS, and the Leachate Conveyance System]. To control and manage the collected water under this contingency plan, four variations of temporary operation may be implemented; depending on the location of the Leachate Management System failure. The four variations and their dependent mode of system failure are:

- Temporary Operating Mode A: Failure of LTS pipe segment PS-1, PS-2, PS-3, PS-4, or PS-5
- Temporary Operating Mode B: Failure of LTS pipe segments PS-6
- Temporary Operating Mode C: Failure of LTS pipe segments PS-7
- Temporary Operating Mode D: Failure of the PLS or the Leachate Conveyance System.

In order to be prepared to initiate a Temporary Operating Mode, the following equipment will be maintained in storage ready to be used if needed:

- 400 feet of 3-inch temporary hose/ piping on a reel
- 50 feet of 3-inch temporary hose/pipe
- Electric pump, rated for 50 gpm
- Portable secondary containment for the tanker truck. The temporary secondary containment shall consist of drive-in/drive-out endwalls with collapsible sidewalls. It shall be sized to hold no less than 5,000 gallons (the size of the ARWWP tanker). Similar to Ultra Containment Berms, Ultimate Model, part number 8505.

Other items needed for implementing a Temporary Operating Mode are standard off-the-shelve items that can be quickly obtained such as: flanges, cable, pipe elbows, tees, hose connectors, etc.

4.1 TEMPORARY OPERATING MODE A

This mode of temporary operation will be implemented in the event of either a 6-inch carrier pipe and/or a 10-inch containment pipe failure in PS-1, PS-2, PS-3, PS-4, or PS-5 (see Figure 1).

4.1.1 Temporary Operating Mode A1

This mode of temporary operation will be implemented in the event of a 6-inch carrier pipe failure in PS-1, PS-2, PS-3, PS-4, or PS-5 (see Figure 1).

A plan showing Temporary Operation Mode A1 is shown on Figure 2. The sequence of transitioning to Temporary Operating Mode A1 will be as follows:

1) Close and lock the 6-inch LTS knife gate valve at the outlet of the next upstream Valve House X (V-X60) to prevent flow into Valve House Y. (Note: Not applicable for PS-1)

2) Close and lock the 3-inch LCS ball valve (V-Y39) at Valve House Y to prevent inflow from its LCS system.

3) Close and lock the 3-inch ball LCS valve (V-Z39) in Valve House Z to prevent inflow from its LCS system.

4) Close and lock the 6-inch LTS knife gate valve (V-Z60) at the outlet of Valve House Z to prevent backflow from the remaining potentially active downstream line.

5) Remove section of failed 6-inch carrier pipe as follows: Remove steel LTS carrier piping inside Valve House Z between the flanged HDPE/Steel connection and the downstream 6" x 6" x 6" wye pipe cleanout. Disconnect the 6-inch HDPE failed LTS carrier pipe from the flanged connection in Valve House Y. Remove necessary Valve House Z wall sections to permit access of cable rigging. Attach cable rigging to downstream 6-inch HDPE pipe; cut off the upstream HDPE flange and pull the failed carrier pipe out of the containment pipe. Place the carrier pipe on the surface and begin repairs.

6) Install the temporary 3-inch hose/pipe through the containment pipe. Connect the hose/pipe to the downstream LTS 6" x 6" x 6" wye pipe cleanout and to the upstream 6-inch knife gate valve (V-Y60).

7) When the temporary operation is ready, open the 6-inch LTS knife gate valve (V-Z60) in Valve House Z, the Valve House X 6-inch gate valve (V-X60) and the two 3-inch LCS valves, V-Z39 and V-Y39. Temporary Operating Mode A1 is now operational.

4.1.2 Temporary Operating Mode A2

This mode of temporary operation will be implemented in the event of a 10-inch containment pipe failure in segments PS-1, PS-2, PS-3, PS-4, or PS-5 (see Figure 1). Provided the 6-inch carrier pipe has been determined to be sound (see Section 3), the standard operating mode will continue with the exception of increased leak monitoring from weekly to daily. This daily monitoring will limit the buildup of liquid in the pipe, thus permitting the continued driving force of outside perched water into the pipe. The pressure differential between the surrounding saturated soil and the inside of the pipe maintains the inward driving

force (i.e., in effect a French drain). The enhanced monitoring will ensure leachate is not leaked to the environment and will permit time to put into place the desired repair. Preparations and plans to make repairs to the containment pipe will proceed immediately. An action plan will be developed that outlines the repair method, schedule of repair, downtime expected, and costs.

The containment pipe may be repaired by 1) installing a new 8-inch pipe inside the existing 10-inch containment pipe and then inserting a new 4-inch carrier pipe within the new 8-inch containment pipe, or; 2) slip lining the existing 10-inch containment pipe, or; 3) determining the location of the leak, excavating and placing a patch on the outside of the pipe.

4.1.3 Temporary Operating Mode A3

This mode of temporary operation will be implemented in the event that both the 6-inch carrier and 10-inch containment pipes fail in either segment PS-1, PS-2, PS-3, PS-4, or PS-5 (see Figure 1). The response to this condition will be to remove the carrier pipe and insert the temporary 3-inch hose/pipe as described for Temporary Operating Mode A1 followed by repair of the containment pipe as described in Temporary Operating Mode A2.

4.2 TEMPORARY OPERATING MODE B

This mode of temporary operation will be implemented in the event of a failure of the 6-inch carrier pipe and/or the 10-inch containment pipe in segment PS-6 (see Figure 1).

4.2.1 Temporary Operating Mode B1

This mode of temporary operation will be implemented in the event of a failure of the 6-inch carrier pipe in PS-6 (see Figure 1). The details of this operating mode are essentially the same as Temporary Operating Mode A1 except that the intercepted water will be routed via gravity flow from VH-6 to the CVH using a portion of the existing double contained 6"/10" Interim Leachate Transmission System (ILTS) line (PS-8). Due to the height to which the ILTS pipe exits VH-6; leachate is expected to minimally backup into the carrier pipe between VH-6 and VH-5, with some backup into the OSDF Cell 5 LCS line. This backup; however, will not enter Cell 5 and it will continue to freely drain. However, because of the elevation of the ILTS pipe at VH-6, backup will enter Cell 6 if it has been placed into operation. Accordingly, if Cell 6 is in operation the VH-6 LCS pipe will have to be pumped.

A plan of the VH-6 to CVH arrangement for this operation is shown on Figure 3. The sequence of transitioning to Temporary Operating Mode B1 will be as follows:

1) Close and lock the 6-inch LTS knife gate valves (V-560) at the outlet of Valve House 5 to prevent flow to failed pipeline segment, PS-6.

2) If Cell 6 has been placed in operation, close and lock the LCS 3-inch ball valve (V-639) in VH-6 to prevent inflow from its LTS system.

3) Close and lock the 6-inch LTS knife gate valve (V-1001) in the CVH to insure that backflow does not occur.

4) Remove the steel LTS carrier piping inside VH-6 between the upstream 6"x6"x6" clean-out and the downstream flanged HDPE/steel connection including the 6-inch LTS knife gate valve (V-660). Open the ILTS 6-inch gate valve (V-1004) in the CVH.

5) Install a 3-inch hose from the ILTS 6-inch carrier pipe to the remaining upstream VH-6 LTS piping at the 6"x6"x6 clean-out.

6) When the temporary mode is ready from operation, open V-560 in VH-5.

7) If Cell 6 has been placed in operation, route a hose from the LCS tank pump discharge in VH-6 to the hose connector on the LDS piping in VH-6 and open V-635 in VH-6. Adjust the OSDF Cell 6 LCS flow to no greater than 15 gpm. This flow rate will ensure that the LCS tank pump (PMP-602) can maintain flows without overflowing.

8) Remove section of failed 6-inch HDPE carrier pipe section as follows: Disconnect PS-6 from the 6-inch knife gate valve (V-1001) in the CVH. Remove necessary Valve House 6 wall sections to permit access of cable rigging. Attach cable rigging to the end of the upstream 6-inch HDPE pipe; cut off the downstream HDPE flange and pull the failed carrier pipe out of the containment pipe. Place the carrier pipe on the surface and begin repairs.

4.2.2 Temporary Operating Mode B2

This mode of temporary operation will be implemented in the event of a failure of the 10-inch containment pipe in PS-6 (see Figure 1). Provided the 6-inch carrier pipe has been determined to be sound (see Section 3). The standard operating mode will continue with the exception of increased leak monitoring from weekly to daily. This daily monitoring will limit the buildup of liquid in the pipe, thus permitting the continued driving force of outside perched water into the containment pipe. The pressure differential between the surrounding saturated soil and the inside of the pipe maintains the inward driving force (i.e., in effect a French drain). The enhanced monitoring will ensure leachate is not leaked to the environment and will permit time to put into place the desired repair. Preparations and plans to make repairs to the containment pipe will proceed immediately. An action plan will be developed that outlines the repair method, schedule of repair, downtime expected, and costs.

The containment pipe may be repaired by 1) installing a new 8-inch pipe inside the existing 10-inch containment pipe and then inserting a new 4-inch carrier pipe within the new 8-inch containment pipe, or; 2) slip lining the existing 10-inch containment pipe, or; 3) determining the location of the leak, excavating and placing a patch on the outside of the pipe.

4.2.3 Temporary Operating Mode B3

This mode of temporary operation will be implemented in the event of that both the 6-inch carrier and 10-inch containment pipes receive failure determinations. The response to this condition will be to remove the carrier pipe and reroute flow to the ILTS as described in the guidance for Temporary Operating Mode B1, until repairs are completed.

4.3 TEMPORARY OPERATING MODE C

This mode of temporary operation will be implemented in the event of a failure of the 6-inch carrier pipe and/or 10-inch containment pipe failure for segment PS-7 (see Figure 1).

4.3.1 Temporary Operating Mode C1

This mode of temporary operation will be implemented in the event of a failure of the 6-inch carrier pipe PS-7 (see Figure 1). A plan of the arrangement for this operation is shown on Figure 4. The sequence of transitioning to Temporary Operating Mode C1 will be as follows:

1) Close the LTS 6-inch knife gate valve (V-1001) in the CVH

2) Remove the steel LTS carrier piping inside the CVH beginning with the flowmeter to the steel/HDPE flange at the inlet to PS-7.

3) Remove the drop leg on the carrier pipe in the PLS, cut the flange off PS-7.

4) Remove necessary CVH wall sections to permit access of cable rigging. Attach cable rigging to upstream 6-inch HDPE pipe and pull the failed carrier pipe out of the containment pipe. Place the carrier pipe on the surface and begin repairs.

5) Push/pull the temporary 3-inch hose/pipe into the containment pipe and connect to the existing LTS piping inside the CVH.

6) When the temporary mode is ready for operation, open valve V-1001 in the CVH and commence Temporary Operating Mode C1.

4.3.2 Temporary Operating Mode C2

This mode of temporary operation will be implemented in the event of a failure of the 10-inch containment pipe in PS-7 (see Figure 1). Provided the 6-inch carrier pipe has been determined to be sound (see Section 3). The standard operating mode will continue with the exception of increased leak monitoring from weekly to daily. This daily monitoring will limit the buildup of liquid in the containment pipe, thus permitting the continued driving force of outside perched water into the pipe. The pressure differential between the surrounding saturated soil and the inside of the pipe maintains the inward driving force (i.e. in effect a French drain). The enhanced monitoring will ensure leachate is not leaked to the environment and will permit time to put into place the desired repair. Preparations and plans to make repairs to the containment pipe will proceed immediately. An action plan will be developed that outlines the repair method, schedule of repair, downtime expected, and costs.

The containment pipe may be repaired by 1) installing a new 8-inch pipe inside the existing 10-inch containment pipe and then inserting a new 4-inch carrier pipe within the new 8-inch containment pipe, or; 2) slip lining the existing 10-inch containment pipe, or; 3) determining the location of the leak, excavating and placing a patch on the outside of the pipe.

4.3.3 Temporary Operating Mode C3

This mode of temporary operation will be implemented in the event that both the 6-inch carrier and 10-inch containment pipes receive failure determinations. The response to this condition will be to remove the carrier pipe and insert a 3-inch hose as described for Temporary Operating Mode C1 followed by repair of the containment pipe as described in Temporary Operating Mode C2.

4.4 TEMPORARY OPERATING MODE D

This mode of temporary operation will be implemented in the event of a failure of the PLS, or a failure of the Leachate Conveyance System (see Figure 1). A schematic of this mode of temporary operation is shown on Figure 5A and a plan of the CVH arrangement for this operation is shown on Figure 5B. Preparations and plans to make repairs to the PLS or Leachate Conveyance System will proceed immediately. An action plan will be developed that outlines the repair method, schedule of repair, downtime expected, and costs.

The sequence of transitioning to Temporary Operating Mode D (see Figure 5B) will be as follows:

1) Close and lock the 6-inch LTS knife gate valve (V-1001) at the inlet to the CVH to prevent inflow to the CVH.

2) Close and lock the 6-inch LTS knife gate valve (V-1003) at the outlet of the CVH

3) Prepare for temporary pumping of the leachate as follows: Install a skid mounted electric powered emergency pumping system in the CVH. Connect a 3-inch hose/pipe from the 3-inch ball valve (V-1005) hose connection on the LTS to the pump suction. Connect the hose to the pump discharge and install the other end in the adjacent tanker truck. Remove necessary CVH wall section to permit hose penetration at top of concrete in location shown (Figure 5B). Note that while being loaded/unloaded, the tanker truck will be located in a temporary secondary containment pad.

4) When the contingency mode is ready for operation, open the 6-inch knife LTS gate valve at the inlet to the CVH (V-1001) and at the pump suction and commence Temporary Operating Mode D.

5) Initiate repairs to the PLS or Leachate Conveyance System.

The temporary pumping system will be operated by a Wastewater Pump Operator (under the supervision of ARWWP Operations) to batch transfer leachate to the tanker truck. When the tanker is full, the emergency pump will be shut-off and the hose removed from the tanker, and the tanker will be driven by a qualified motor vehicle operator (under the supervision of ARWWP Operations) directly to the AWWT Phase II truck unloading facility.

If a rain event has resulted in the generation of a significant quantity of leachate, a minimum of 12,000 gallons/day will be scheduled to be pumped and trucked to the AWWT until the flow is minimal. Because of the physical limitation on the quantity of leachate which will be transferred by the trucking operation, it will likely be necessary to also implement temporary impacted runoff management as outlined in Section 4.5 and shown schematically on Figure 5A.

4.5 TEMPORARY IMPACTED RUNOFF MANAGEMENT

Temporary impacted runoff management is not required for Temporary Operating Modes A, B or C.

Transfer of leachate by tanker truck in Temporary Operating Mode D will restrict quantities being processed, therefore, impact runoff management will be required to minimize the amount of water accumulating on each cell's primary liner. The schematic in Figure 5A indicates how this will be accomplished. One or more of the

active storm water catchment areas will have a gasoline-powered, high-volume construction dewatering (trash) pump installed to transfer impacted runoff. Pumps of this type are available from numerous local suppliers to purchase or rent.

No stormwater pumping will be provided at Cell 1 because its catchment area has been filled and its impacted runoff currently flows into the adjacent Cell 2 catchment area. As a result, an extra load is placed on the Cell 2 catchment area. Similar situations will exist as the cell construction moves south. Since it is desirable to limit runoff to the area immediately west of the OSDF (as remediation excavation in this area will be underway shortly), pumped impacted runoff will be discharged either directly to the recently installed storm inlet located just northwest of VH-6 or to one of several standpipes which will be installed on the existing ILTS (see details on Figure 6). Near Valve House 6, the ILTS pipe will be severed and modified to allow the northern segment to discharge directly into this storm sewer inlet. Therefore, the northern portion of the ILTS will be a key element in the execution of Cells 2 through 6 impacted runoff management until such time as the cells' catchment area are filled.

5.0 DELIVERABLES

Two deliverables will be submitted to U.S. Environmental Protection Agency (EPA) and Ohio Environmental Protection Agency (OEPA) in the event that this contingency plan is implemented. The first will be a letter to notify EPA and OEPA that this contingency plan has been implemented. This notification will identify the date the plan was implemented, the situation that prompted activation of this contingency plan, and an estimated schedule of when the LMS will again be fully operational. The second deliverable will notify EPA and OEPA that implementation of the contingency plan has been terminated and normal operation of the LMS has resumed. The second deliverable will include a description of the failure, cause of the failure, and a description of the repair required. Note that the OSDF will continue to operate during implementation of the contingency plan.

APPENDIX A

LDS, LCS, RLCS, AND LTS ACTION LEVELS

The LDS, LCS, RLCS, and LTS action levels are based on the following:

- The total volume pumped from the Permanent Lift Station (PLS) is known and recorded daily. This daily flow (gal/day) is an indication of whether or not the Leachate Transmission System (LTS) and Leachate Collection System (LCS) pipes were surcharged for that day. A high-volume day is any day when flow is greater than or equal to 306,720 gallons for the day. This is equivalent to 213 gpm, the theoretical limit at which the two pumps cannot keep up with the inflow (see attached system curve for the PLS, Figure A1) and results in closing of the high flow control valve. When the valve closes, the LTS surcharges to 30.35 feet at the Control Valve House (CVH) for the LTS. The surcharge for each segment of LTS piping varies due to the upward sloping of the line. A surcharge of only 6 feet for each LCS and RLCS is experienced (assumes line only fills up to its invert elevation at the edge of the cell as a check valve on each cell prevents LTS backup). The LDS is isolated from the LTS and will not experience backpressure. Also the pipe between the CVH and the PLS only experiences low pressure as a result of the upstream high flow control valve

- A low-volume day is any day when the flow is less than 306,720 gallons for the day. It is assumed that the discharge from two pumps can keep up with the inflow, and the high flow control valve does not close. Note: if one pump fails, this daily flow is reduced to 288,000 gallons.

- The "action level" is determined using the AWWA "Allowance for Expansion Under Test Pressure for Ambient Conditions" (1999). This table is included in the specifications for construction of the EPLTS. Specification 02605, Table 3 (Table 02605-3 attached). The allowance permits makeup water to be added during the testing of the pipeline; therefore, theoretically, the makeup water quantity per 100 feet of pipe equates to a "normal leakage" for HDPE piping. This "normal leakage" is the limit the pipe can be tested by the AWWA standards. The source of the leakage may be impossible to determine given the limitations of current industrial standards; therefore, collected water in the containment pipe is assumed to be "normal leakage" until it exceeds the values given by following the AWWA standards.

- This determination of the "action level" assumes the volume for leak-monitoring ports are measured weekly, the current monitoring frequency used by ARWWP operations.

- No condensate is considered in the calculations.

How the process works, an example:

During any 7 day period, AWWT Operation's personnel monitor and record the daily flow being pumped from the PLS to the Bio-Surge Lagoon (BSL). This number is recorded for future reference. On the 7th day, AWWT Operation's personnel go to each Valve House and CVH, open the monitoring port valve and measure any accumulation of water in the various containment pipes. If the weekly containment piping inspections indicate a measured quantity less than these minimum potential volumes or action levels (as defined in Section 3), the data will be logged and noted as < minimum; and no further action will be taken. However, if the measured quantity is greater than the minimum potential volumes an investigation pressure test of the pipe segment in question will commence

At the same time, the actual operating conditions will be evaluated by ARWWP staff to determine if the measured quantity exceeds the potential theoretical limit (Table A1) under the actual weekly operating conditions experienced. These numbers are compared to the AWWA allowance rate based on pumping conditions for that 7-day period. AWWT Operation's personnel will determine the number of days of max-volume (days greater than 306,720 gallons). Operations personnel then compare the measured quantities of accumulated water to the max-volume condition that existed for that 7-day period. The volume is acceptable if below the values listed in Table A1. However, the investigation pressure test results will be the determining factoring of pipe soundness.

TABLE A1

LDS, LCS, RLCS, and LTS ACTION LEVELS

	Volume (gal/week)								
			LCS						
No. of Days PLS at Maximum Pumping*	LDS	LCS & RLCS	VH1-VH2 PS-1	VH2-VH3 PS-2	VH3-VH4 PS-3	VH4-VH5 PS-4	VH5-VH6 PS-5	VH6-CVH PS-6	CVH – PLS PS-7
7	0.6	1.0	3.0	3.7	4.4	5.1	5.8	26.1	0.1
6	0.6	1.0	2.8	3.4	4.0	4.6	5.2	23.1	0.1
5	0.6	0.9	2.5	3.0	3.6	4.1	4.6	20.1	0.1
4	0.6	0.9	2.3	2.7	3.1	3.5	3.9	17.1	0.1
3	0.6	0.8	2.1	2.4	2.7	3.0	3.3	14.0	0.1
2	0.6	0.8	1.9	2.1	2.3	2.5	2.7	11.0	0.1
1	0.6	0.7	1.6	1.7	1.8	1.9	2.0	8.0	0.1
0	0.6	0.7	1.4	1.4	1.4	1.4	1.4	5.0	0.1

Calculations:

1. The AWWA Allowance Table requires the make-up water allowance to be reduced based on the pressure of the system. That reduction is calculated by dividing system pressure (operating pressure of the pipe) by maximum design pressure (1.5 times the pressure rating). For the HDPE SDR 11 piping used, the pressure rating is 160psi; therefore, the maximum design pressure is 240 psi.

2. The AWWA Allowance Table requires the allowance to be reduced based on the ambient temperature. Assuming a constant 60°F, for the buried pipe and leachate flowing through it, the correction factor is determined using the attached chart (see Figure A2). That factor is 0.65.

3. Using the AWWA Table (Table 02605-3), the allowance for 6-inch HDPE pipe is 0.3 gal/100 feet for a one-hour test. This number is then corrected for lower temperature and pressure. Table A2 shows the results for the maximum pressure operating condition, while Table A3 presents the minimum operating pressure conditions. The LDS and CVH-PLS pipe segments do not experience maximum pressure operating conditions as each are isolate. (The LDS by an air gap and the CVH-PLS segment by the action of the CVH high flow control valve.)

TABLE A2

EPLTS Leak Allowance for 6-inch HDPE pipe – max pressure condition

	Distance Feet	Elev. drop feet	Pmax feet (avg)	Psi	Pc	Tc	6-inch pipe Allowance gal/100 ft per 1 hour	gal/hr	gal/day
VH1-VH2	400	3	7.25	3.14	0.0131	0.65	0.0026	0.0102	0.2451
VH2-VH3	400	3	10.25	4.44	0.0185	0.65	0.0036	0.0144	0.3466
VH3-VH4	400	3	13.25	5.74	0.0239	0.65	0.0047	0.0187	0.4480
VH4-VH5	400	3	16.25	7.04	0.0294	0.65	0.0057	0.0229	0.5495
VH5-VH6	400	3	19.25	8.34	0.0348	0.65	0.0068	0.0271	0.6509
VH6-CVH	1425	9.6	25.55	11.08	0.0461	0.65	0.0090	0.1282	3.0777
LCS	200	6	3	1.30	0.0054	0.65	0.0011	0.0021	0.0507

TABLE A3

EPLTS Leak Allowance for 6-inch HDPE pipe - low pressure condition

	Distance feet	Pmin feet	Psi	Pc	Tc	GAL/100 ft per 1 hour	Allowance Gal/hr	gal/day
VH1-VH2	400	0.5	0.22	0.0009	0.65	0.0002	0.0007	0.0169
VH2-VH3	400	0.5	0.22	0.0009	0.65	0.0002	0.0007	0.0169
VH3-VH4	400	0.5	0.22	0.0009	0.65	0.0002	0.0007	0.0169
VH4-VH5	400	0.5	0.22	0.0009	0.65	0.0002	0.0007	0.0169
VH5-VH6	400	0.5	0.22	0.0009	0.65	0.0002	0.0007	0.0169
VH6-CVH	1425	0.5	0.22	0.0009	0.65	0.0002	0.0025	0.0602
CVH-PLS	40	0.5	0.22	0.0009	0.65	0.0002	0.0001	0.0017
LCS	200	0.5	0.22	0.0009	0.65	0.0002	0.0004	0.0085

4. The containment pipe is assumed to be surrounded by saturated soil to a height of 2-feet above the top of the pipe. 2.5 feet of pressure is used in the calculations to average the additional foot of pressure from the top of the pipe to the bottom.

5. Using the AWWA Table, the allowance for 10-inch HDPE pipe is 1.3-gal/100 feet for a two-hour test. The two-hour test number was used because it is more restrictive than that the one-hour number. Converting the number to a one-hour basis gives 0.65. This number is then corrected for lower temperature and pressure. It is assumed that leachate cannot escape the containment pipe due to the relatively minor flow of allowable leakage volume in the containment pipe and the pressure differential between the surrounding saturated soil and the inside of the pipe. Only perched water can enter through the containment pipe (see Table A4).

TABLE A4

EPLTS Leak Allowance for 10-inch HDPE pipe						10-inch pipe Allowance gal/100 ft per 1 hour		
	Distance Feet	Pmax feet	Psi	Pc	Tc		gal/hr	gal/day
VH1-VH2	400	2.5	1.08	0.0045	0.65	0.0019	0.0076	0.1832
VH2-VH3	400	2.5	1.08	0.0045	0.65	0.0019	0.0076	0.1832
VH3-VH4	400	2.5	1.08	0.0045	0.65	0.0019	0.0076	0.1832
VH4-VH5	400	2.5	1.08	0.0045	0.65	0.0019	0.0076	0.1832
VH5-VH6	400	2.5	1.08	0.0045	0.65	0.0019	0.0076	0.1832
VH6-CVH	1425	2.5	1.08	0.0045	0.65	0.0019	0.0272	0.6525
CVH-PLS	40	2.5	1.08	0.0045	0.65	0.0019	0.0008	0.0183
LCS	200	2.5	1.08	0.0045	0.65	0.0019	0.0038	0.0916
LDS	200	2.5	1.08	0.0045	0.65	0.0019	0.0038	0.0916

6. The Leachate Detection System (LDS) pipe from each cell is assumed to have only one possible leak case, that being perched water entering the containment pipe. This is due to the fact that the system cannot be pressurized because the flow in the LDS is very small and the system is isolated from any surcharging of the LTS.

7. The cases reflect the max/min pumping conditions.

TABLE 02605-3
ALLOWANCE* FOR EXPANSION
UNDER TEST PRESSURE FOR AMBIENT CONDITIONS+
Allowance for Expansion
(U.S. Gallons / 100 Feet of Pipe)

Nominal Pipe Size (Inches)	1 Hour Test	2 Hour Test	3 Hour Test
3	0.10	0.15	0.25
4	0.13	0.25	0.40
6	0.30	0.60	0.90
8	0.50	1.0	1.5
10	0.75	1.30	2.10
11	1.0	2.0	3.0
12	1.1	2.3	3.4
14	1.4	2.8	3.2
16	1.7	3.3	5.0
18	2.2	4.3	6.5
20	2.8	5.5	8.0
22	3.5	7.0	10.5
24	4.5	8.8	13.3
28	5.5	11.1	16.8
32	7.0	14.3	21.5
36	9.0	18.0	27.0
40	11.0	22.0	33.0
48	15.0	27.0	43.0

*These allowances only apply to the actual test phase and not to the initial expansion phase. They also assume pipe is being tested at a maximum design pressure equal to 1.5 times the pressure rating. If the pipe is being tested at a lower system design pressure, the allowance should be reduced by the ratio of the system design pressure to the maximum design pressure.

+When testing at temperatures below ambient (approximately 75°F), less pipe expansion takes place, resulting in lower requirements for make-up water. For a test temperature of about 68°F, the values in this table should be multiplied by a reduction factor of 0.75. For 50°F, this factor is 0.50.

The above footnotes are in accordance with the recommendation of AWWA [1999].

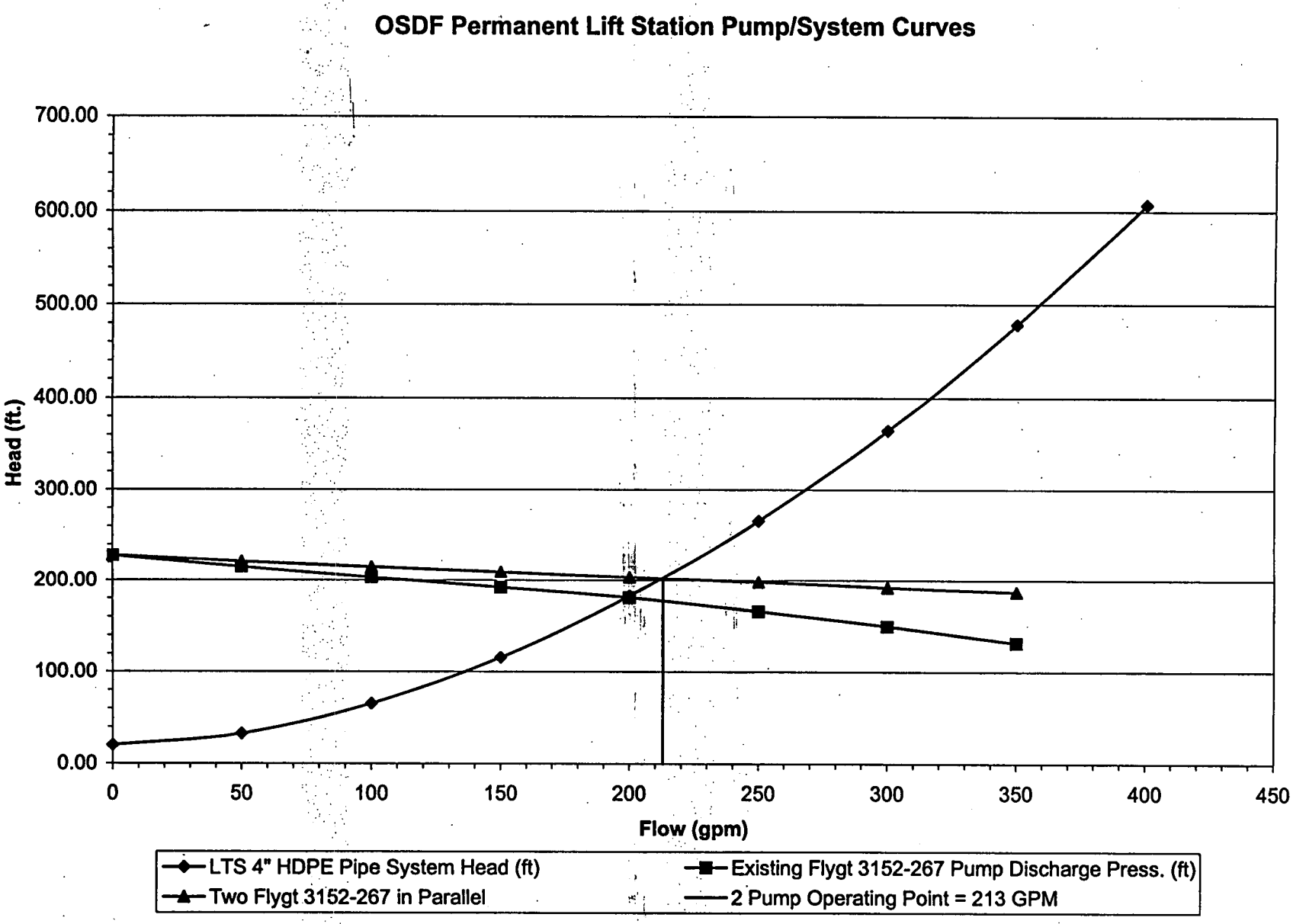
OSDF Permanent Lift Station Pump/System Curves
Head (ft.)
700.00
600.00
500.00
400.00
300.00
200.00
100.00
0.00
0
50
100
150
200
250
300
350
400
450
Flow (gpm)
LTS 4" HDPE Pipe System Head (ft)
Existing Flygt 3152-267 Pump Discharge Press. (ft)
Two Flygt 3152-267 in Parallel
2 Pump Operating Point = 213 GPM

Figure A2: Temperature Correction

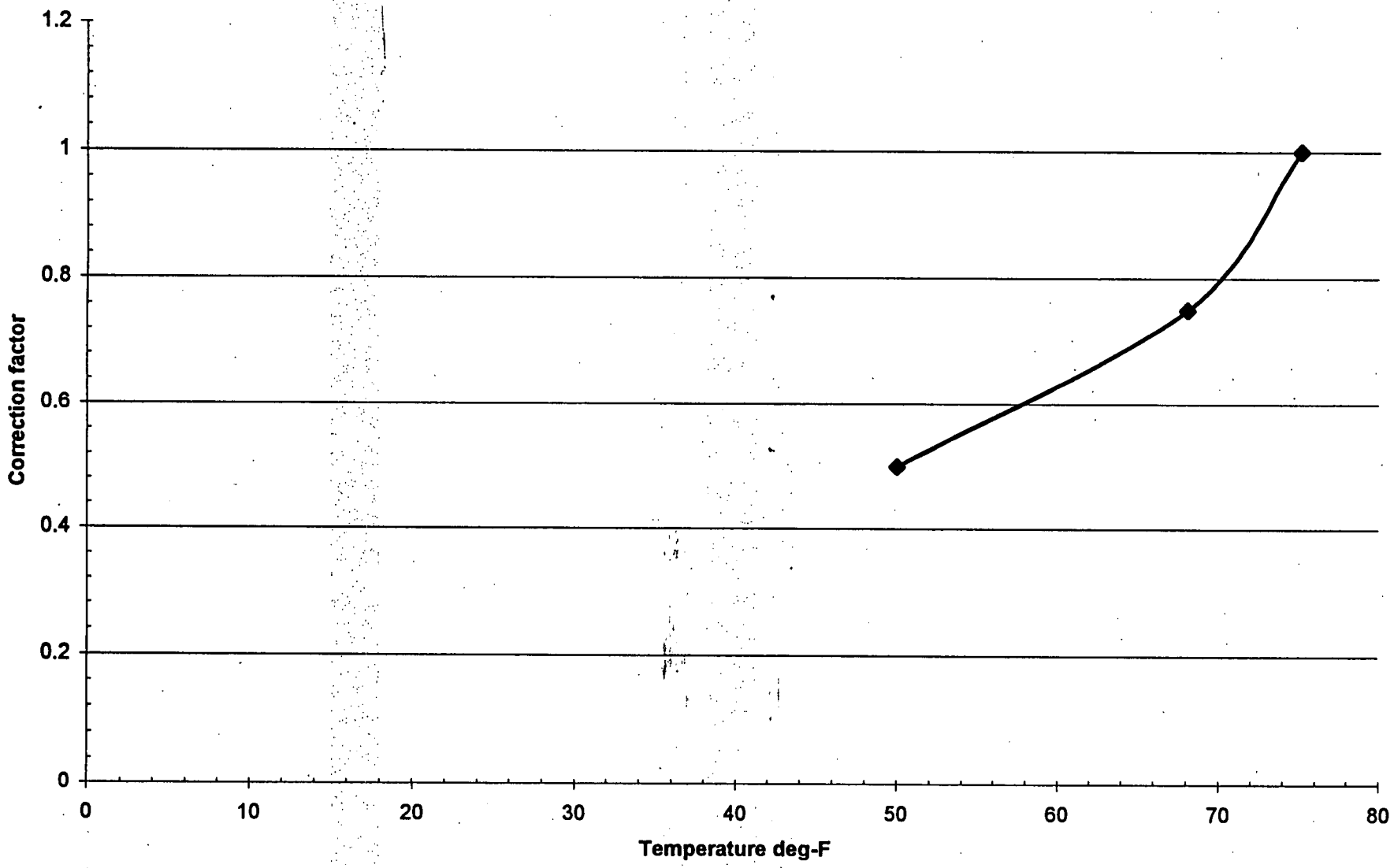

000027

1 34 82

APPENDIX B

PRESSURE TEST CRITERIA

HDPE Pipe Hydrostatic Testing

1) Obtain test temperature of the carrier and containment pipes by inserting a temperature probe approximately 8 feet up the containment pipe.

2) Test HDPE carrier pipe at 60-psi internal pressure. Containment pipe shall be at atmospheric pressure when testing carrier pipe.

3) Test HDPE containment pipe at 15-psi internal pressure. Carrier pipe shall be at atmospheric pressure when testing containment pipe.

4) Initial expansion phase: Allow the pipe to stand at the specified internal pressure until stabilization is reached. Add sufficient make-up water to the pipe four times at one-hour intervals to return to the test pressure. Stabilization is achieved if there is no further change in pressure over a one-hour period. The initial expansion phase shall not exceed 4 hours.

5) Actual test phase: Start the test after the fourth addition of make-up water in the initial expansion phase. Perform test for 1, 2, or 3 hours. At the end of the test phase, add make-up water to return the pipe to test pressure. A passing test is considered to require less make-up water than listed in AWWA Table 02605-3, found in Appendix A. Note: the allowable make-up water must be corrected for pressure and temperature by AWWA criteria found in the notes of the AWWA table.

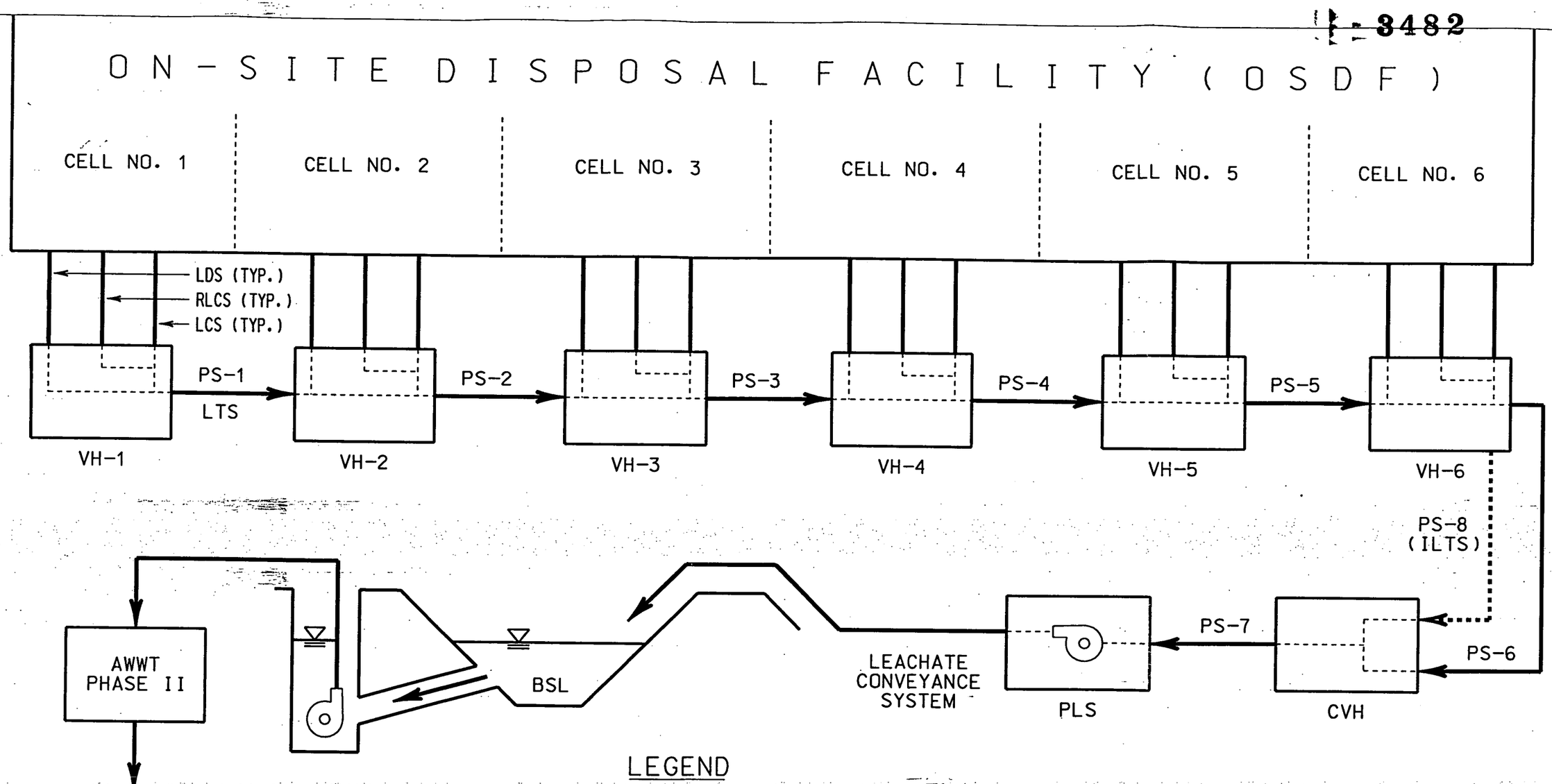

LEGEND

VH	VALVE HOUSE
PS	LCS PIPELINE SEGMENT
CVH	CONTROL VALVE HOUSE
LTS	LEACHATE TRANSMISSION SYSTEM
PLS	PERMANENT LIFT STATION
LDS	LEAK DETECTION SYSTEM
LCS	LEACHATE COLLECTION SYSTEM
RLCS	REDUNDANT LCS
ILTS	INTERIM LTS
BSL	BIODENITRIFICATION SURGE LAGOON
AWWT	ADVANCED WASTE WATER TREATMENT FACILITY
	PUMP

SCHEMATIC -
LEACHATE MANAGEMENT SYSTEM
FIGURE 1

FILENAME: /RES4136/2FIG1.DGN

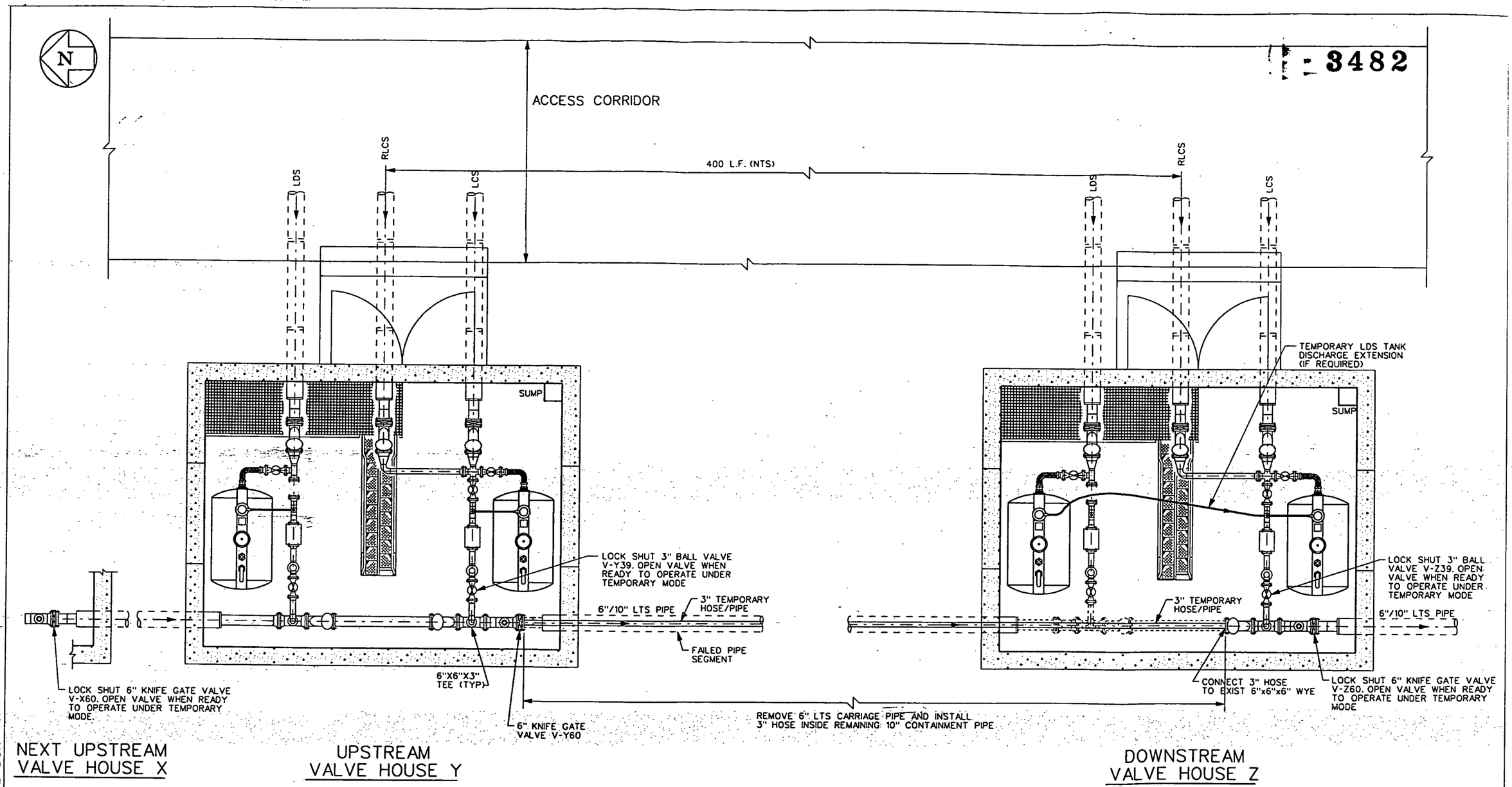

3482

FILENAME: /RES4136/2FIG2.DGN

PLAN - TEMPORARY OPERATING MODE A1

FIGURE 2

000031

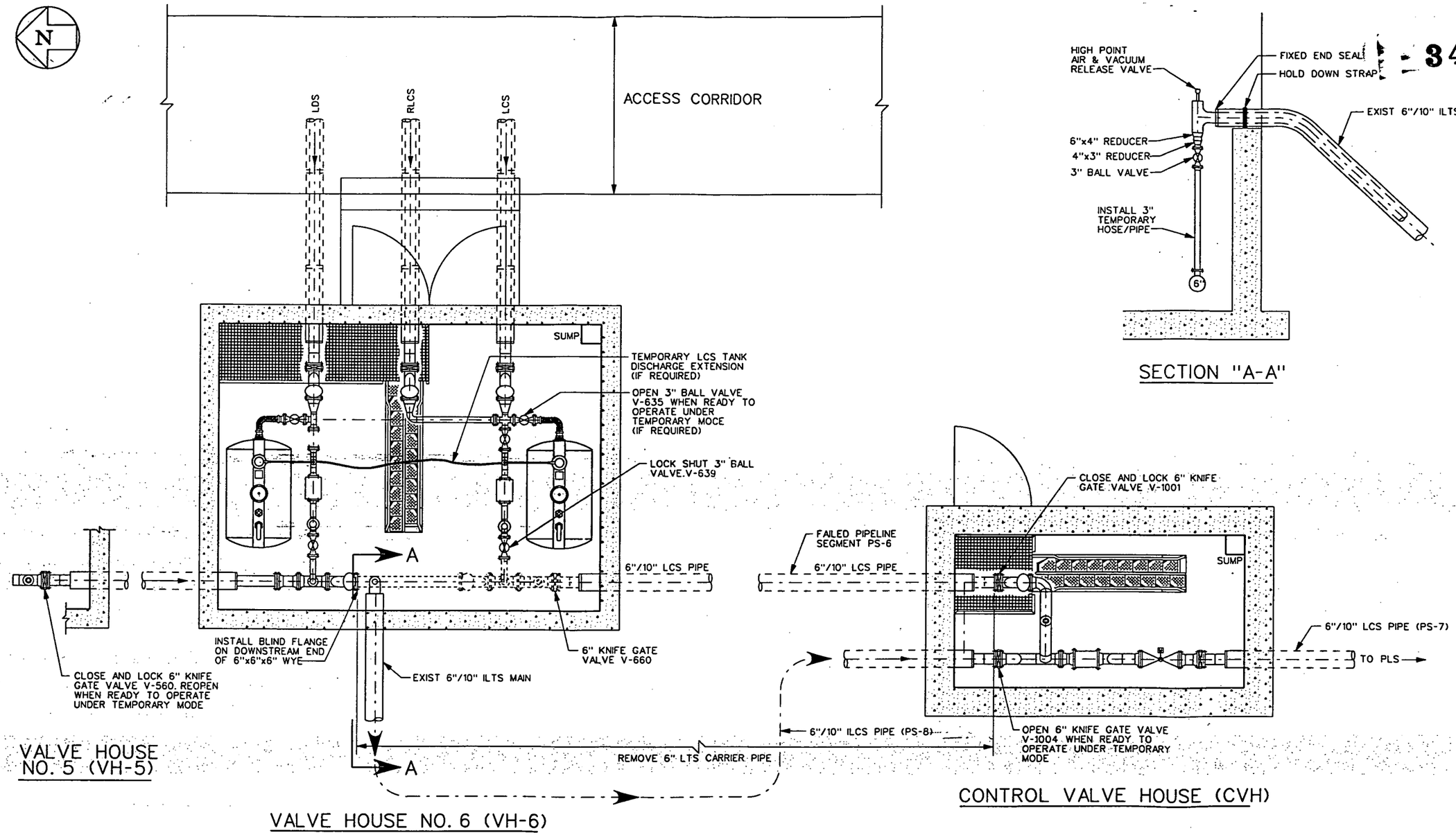

3482

PLAN - TEMPORARY OPERATING MODE B

FIGURE 3

000032

FILENAME: /RES4136/2FIG3.DGN

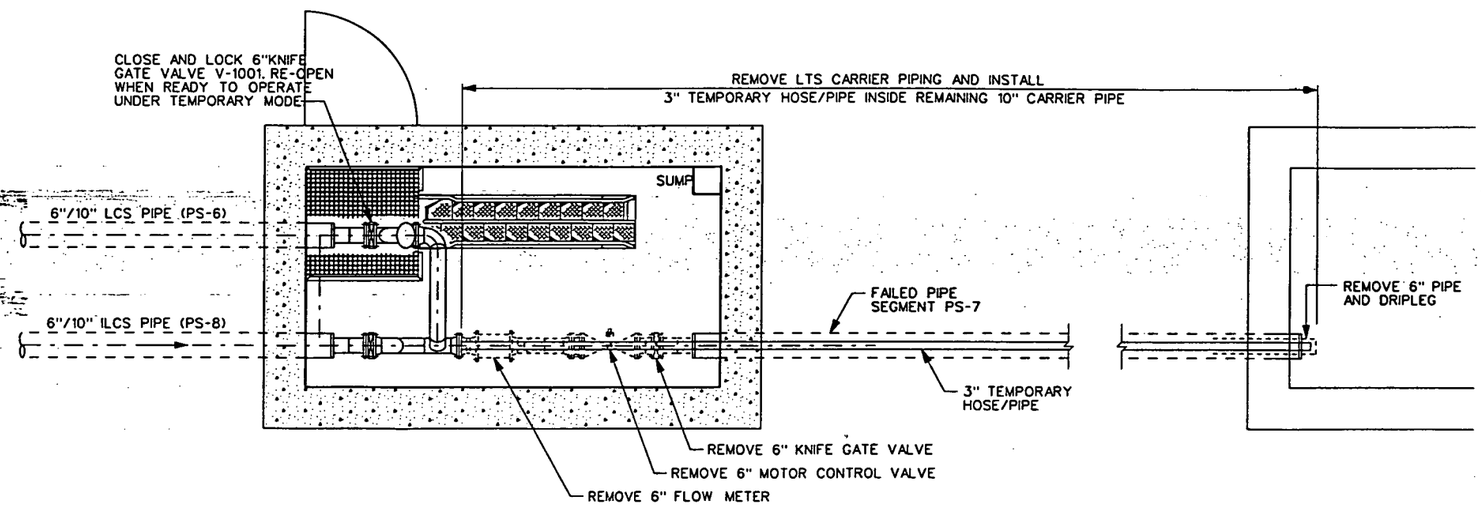

FILENAME: /RES4136/2FIG4.DGN

PLAN - TEMPORARY OPERATING MODE C1

FIGURE 4

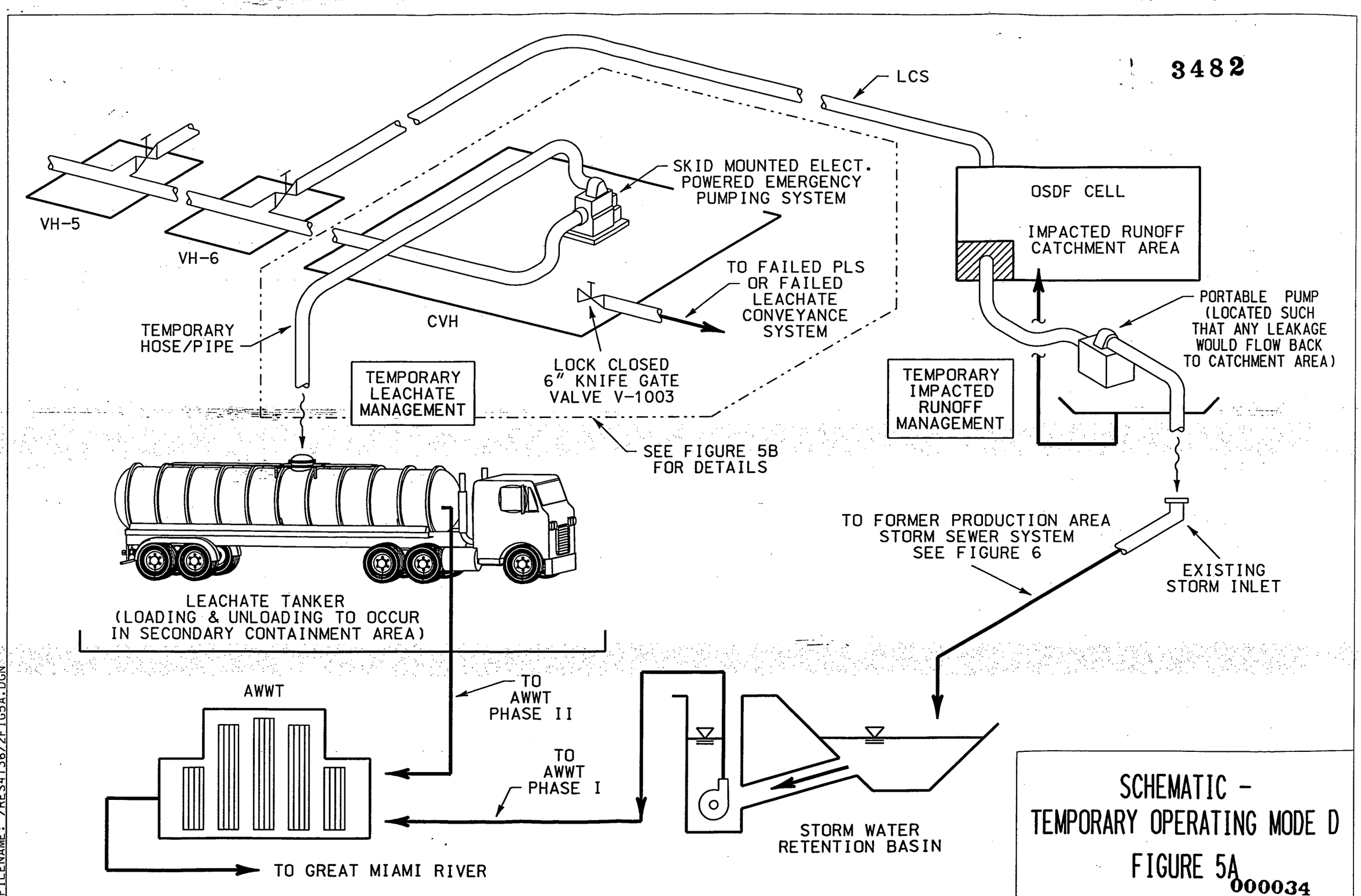

FILENAME: /RES4136/2FIG5A.DGN

SCHEMATIC - TEMPORARY OPERATING MODE D

FIGURE 5A

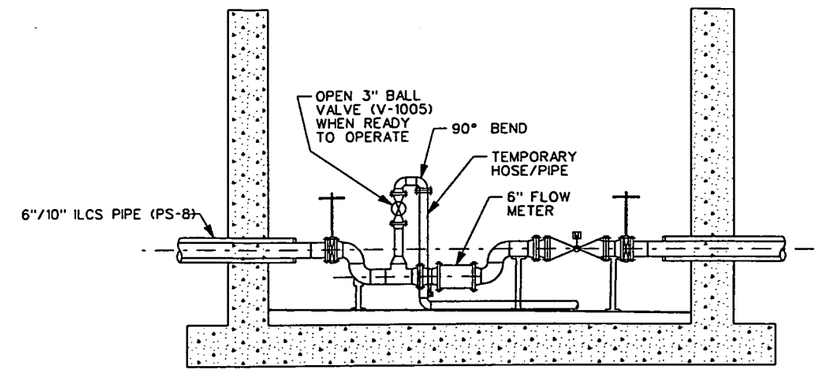

SECTION A-A

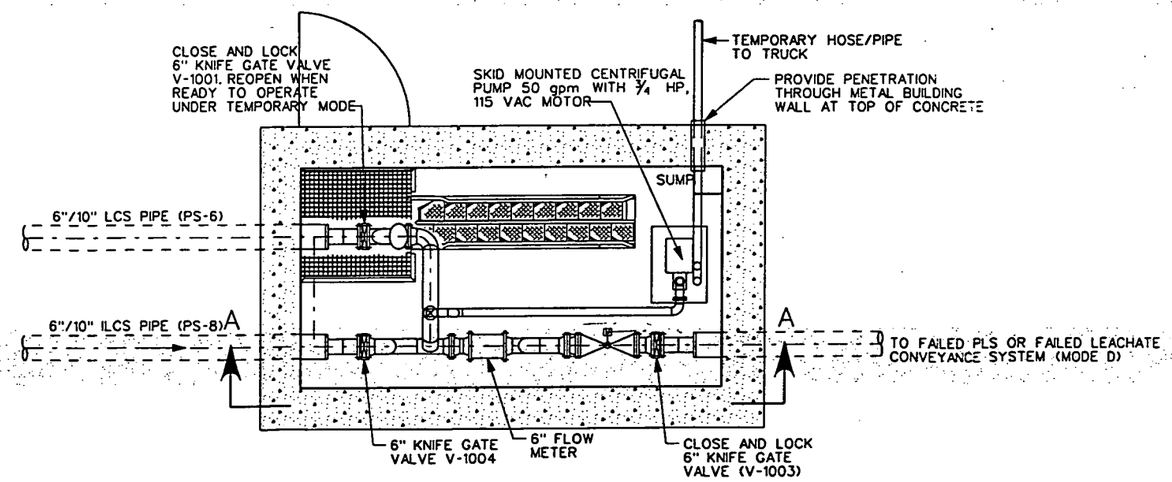

CONTROL VALVE HOUSE

PLAN - TEMPORARY OPERATING MODE D

FIGURE 5B

FILENAME: /RES4136/2FIG5B.DGN

ON-SITE DISPOSAL FACILITY (OSDF)

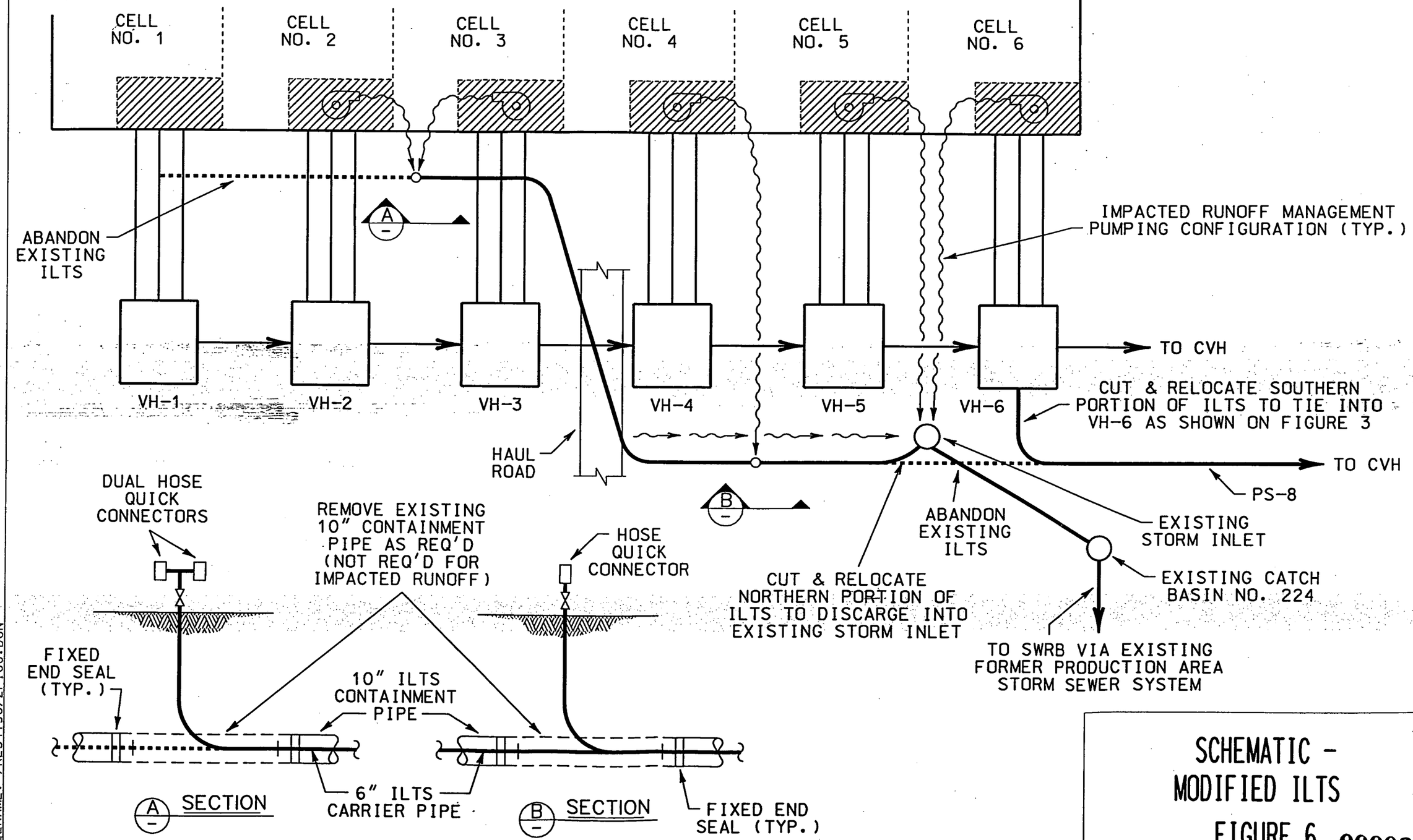

FILENAME: /RES4136/2FIG6.DGN

SCHEMATIC - MODIFIED ILTS

FIGURE 6