# UNITED STATES DEPARTMENT OF ENERGY

## FERNALD ENVIRONMENTAL MANAGEMENT PROJECT

3671

# WASTE STORAGE AREA EXTRACTION SYSTEM
# PHASE 1, SFES SUPPLEMENTAL WELL
# OPERABLE UNIT 5

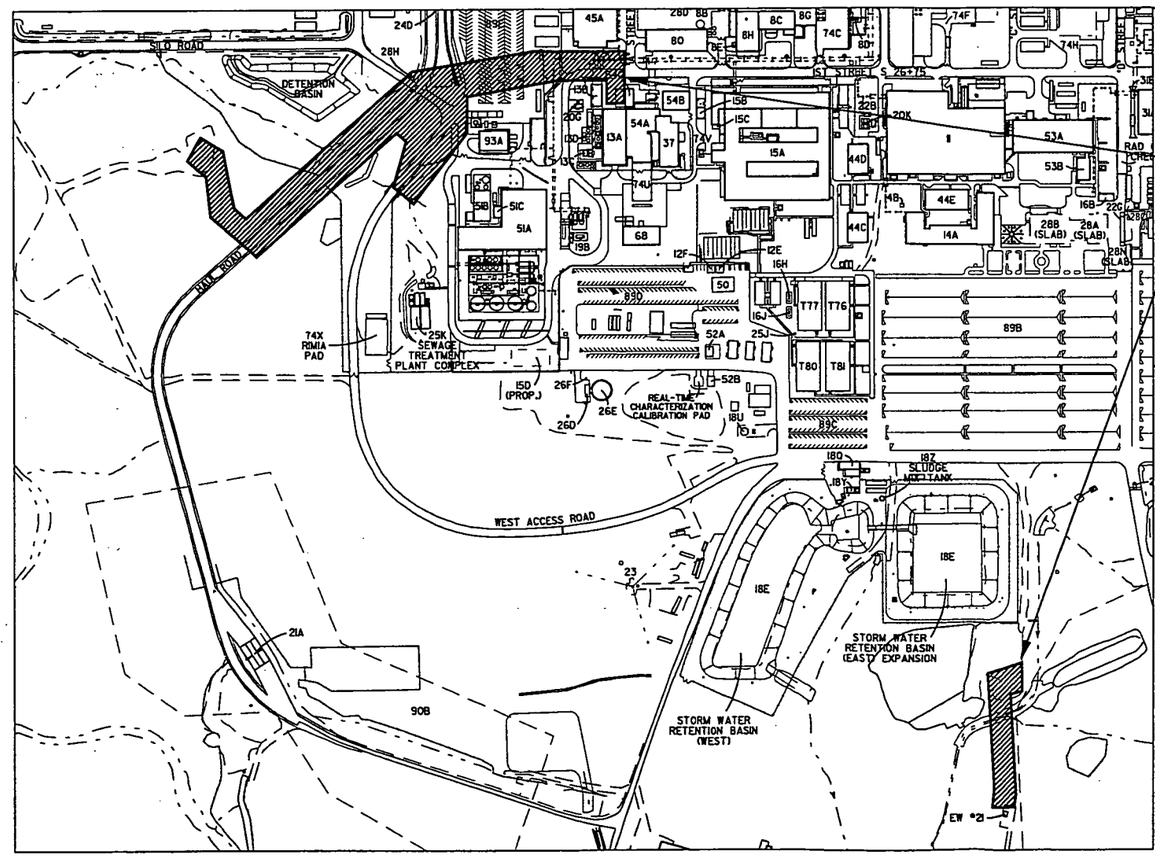


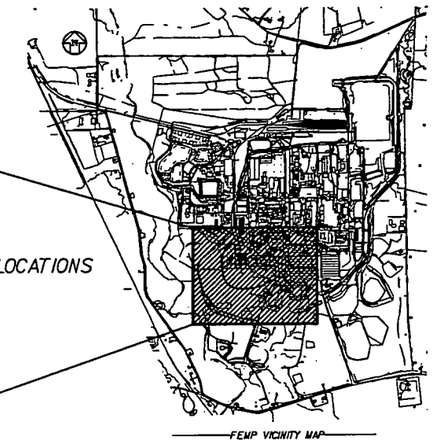


| DRAWING INDEX | | |
|---|---|---|
| FILENAME | DRAWING NO. | TITLE DESCRIPTION |
| 95xx2002.dgn | 95X-5500-X-02002 | WASTE STORAGE AREA EXTRACTION SYSTEM PHASE 1, AND SFES SUPPLEMENTAL WELL PROJECT TITLE SHEET |
| 95xg2003.dgn | 95X-5500-G-02003 | WASTE STORAGE AREA EXTRACTION SYSTEM PHASE 1, AND SFES SUPPLEMENTAL WELL CIVIL LEGEND & SYMBOLS |
| 95xg2004.dgn | 95X-5500-G-02004 | WASTE STORAGE AREA EXTRACTION SYSTEM PHASE 1, AND SFES SUPPLEMENTAL WELL SITE UTILITY PIPING PLAN |
| 95xg2005.dgn | 95X-5500-G-02005 | WASTE STORAGE AREA EXTRACTION SYSTEM PHASE 1, AND SFES SUPPLEMENTAL WELL SITE UTILITY PIPING PLAN |
| 95xg2006.dgn | 95X-5500-G-02006 | WASTE STORAGE AREA EXTRACTION SYSTEM PHASE 1, AND SFES SUPPLEMENTAL WELL PROFILES |
| 95xa2007.dgn | 95X-5500-A-02007 | WASTE STORAGE AREA EXTRACTION SYSTEM PHASE 1, AND SFES SUPPLEMENTAL WELL ARCHITECTURAL PLAN AND ELEVATIONS, WELL HOUSE H-4 |
| 95xa2008.dgn | 95X-5500-A-02008 | WASTE STORAGE AREA EXTRACTION SYSTEM PHASE 1, AND SFES SUPPLEMENTAL WELL ARCHITECTURAL SECTIONS AND DETAILS, WELL HOUSE H-4 |
| 95xp2009.dgn | 95X-5500-P-02009 | WASTE STORAGE AREA EXTRACTION SYSTEM PHASE 1, AND SFES SUPPLEMENTAL WELL PIPING/PLANT DESIGN WELL HOUSE PIPING PLAN |
| 95xp2010.dgn | 95X-5500-P-02010 | WASTE STORAGE AREA EXTRACTION SYSTEM PHASE 1, AND SFES SUPPLEMENTAL WELL PIPING/PLANT DESIGN WELL HOUSE PIPING SECTION |
| 95xg2011.dgn | 95X-5500-G-02011 | WASTE STORAGE AREA EXTRACTION SYSTEM PHASE 1, AND SFES SUPPLEMENTAL WELL DETAILS |
| 95xg2012.dgn | 95X-5500-G-02012 | WASTE STORAGE AREA EXTRACTION SYSTEM PHASE 1, AND SFES SUPPLEMENTAL WELL DETAILS |
| 95xe2016.dgn | 95X-5500-E-02016 | WASTE STORAGE AREA EXTRACTION SYSTEM PHASE 1, AND SFES SUPPLEMENTAL WELL ELECTRICAL SYMBOLS AND LEGEND |
| 95xe2017.dgn | 95X-5500-E-02017 | WASTE STORAGE AREA EXTRACTION SYSTEM PHASE 1, AND SFES SUPPLEMENTAL WELL ELECTRICAL SYMBOLS AND LEGEND |
| 96e00358.dgn | 96X-5900-E-00358 | WASTE STORAGE AREA EXTRACTION SYSTEM PHASE 1, AND SFES SUPPLEMENTAL WELL 0.2 KV AERIAL DISTRIBUTION SINGLE LINE DIAGRAM |
| 96e00352.dgn | 96X-5900-E-00352 | WASTE STORAGE AREA EXTRACTION SYSTEM PHASE 1, AND SFES SUPPLEMENTAL WELL ELECTRICAL 0.2 KV POLE SCHEDULE SHT. 1 OF 2 |
| 96xe2003.dgn | 96X-5500-E-02003 | WASTE STORAGE AREA EXTRACTION SYSTEM PHASE 1, AND SFES SUPPLEMENTAL WELL ELECTRICAL 0.2 KV POLE SCHEDULE SHT. 2 OF 2 |
| 95xe2021.dgn | 95X-5500-E-02021 | WASTE STORAGE AREA EXTRACTION SYSTEM PHASE 1, AND SFES SUPPLEMENTAL WELL ELEC. 0.2 KV DISTRIBUTION & COAL PLAN |
| 95xe2022.dgn | 95X-5500-E-02022 | WASTE STORAGE AREA EXTRACTION SYSTEM PHASE 1, AND SFES SUPPLEMENTAL WELL ELEC. 0.2 KV DISTRIBUTION & COAL PLAN |
| 95xe2023.dgn | 95X-5500-E-02023 | WASTE STORAGE AREA EXTRACTION SYSTEM PHASE 1, AND SFES SUPPLEMENTAL WELL ELECTRICAL ELEVATIONS, SECTIONS AND DETAILS |
| 95xe2024.dgn | 95X-5500-E-02024 | WASTE STORAGE AREA EXTRACTION SYSTEM PHASE 1, AND SFES SUPPLEMENTAL WELL ELECTRICAL ELEVATIONS, SECTIONS AND DETAILS |
| 95xe2025.dgn | 95X-5500-E-02025 | WASTE STORAGE AREA EXTRACTION SYSTEM PHASE 1, AND SFES SUPPLEMENTAL WELL ELECTRICAL ELEVATIONS, SECTIONS AND DETAILS |
| 95xe2026.dgn | 95X-5500-E-02026 | WASTE STORAGE AREA EXTRACTION SYSTEM PHASE 1, AND SFES SUPPLEMENTAL WELL ELECTRICAL ELEVATIONS, SECTIONS AND DETAILS |
| 95xe2027.dgn | 95X-5500-E-02027 | WASTE STORAGE AREA EXTRACTION SYSTEM PHASE 1, AND SFES SUPPLEMENTAL WELL ELECTRICAL SECTIONS AND DETAILS |
| 95xe2028.dgn | 95X-5500-E-02028 | WASTE STORAGE AREA EXTRACTION SYSTEM PHASE 1, AND SFES SUPPLEMENTAL WELL ELECTRICAL MATERIAL LIST AND STANDARD DETAILS |
| 95xe2030.dgn | 95X-5500-E-02030 | WASTE STORAGE AREA EXTRACTION SYSTEM PHASE 1, AND SFES SUPPLEMENTAL WELL ELECTRICAL SINGLE LINE DIAGRAM |
| 95xe2031.dgn | 95X-5500-E-02031 | WASTE STORAGE AREA EXTRACTION SYSTEM PHASE 1, AND SFES SUPPLEMENTAL WELL ELECTRICAL PANEL SCHEDULE & DIAGRAMS ELEMENTARY AND INTERCONNECTION |
| 95xe2032.dgn | 95X-5500-E-02032 | WASTE STORAGE AREA EXTRACTION SYSTEM PHASE 1, AND SFES SUPPLEMENTAL WELL ELECTRICAL ELEVATIONS, SECTIONS AND DETAILS |
| 95xe2033.dgn | 95X-5500-E-02033 | WASTE STORAGE AREA EXTRACTION SYSTEM PHASE 1, AND SFES SUPPLEMENTAL WELL ELECTRICAL CABLE SCHEDULE |
| 95xe2034.dgn | 95X-5500-E-02034 | WASTE STORAGE AREA EXTRACTION SYSTEM PHASE 1, AND SFES SUPPLEMENTAL WELL ELECTRICAL CABLE SCHEDULE |
| 95xe2035.dgn | 95X-5500-E-02035 | WASTE STORAGE AREA EXTRACTION SYSTEM PHASE 1, AND SFES SUPPLEMENTAL WELL ELECTRICAL CABLE SCHEDULE |
| 95xe2036.dgn | 95X-5500-E-02036 | WASTE STORAGE AREA EXTRACTION SYSTEM PHASE 1, AND SFES SUPPLEMENTAL WELL ELECTRICAL CONDUIT SCHEDULE |
| 95xe2038.dgn | 95X-5500-E-02038 | WASTE STORAGE AREA EXTRACTION SYSTEM PHASE 1, AND SFES SUPPLEMENTAL WELL ELECTRICAL 480/120 POWER, INSTRUMENT & LIGHTING PLAN |
| 95xn2041.dgn | 95X-5500-N-02041 | WASTE STORAGE AREA EXTRACTION SYSTEM PHASE 1, AND SFES SUPPLEMENTAL WELL MECHANICAL PROCESS PIPING AND INSTRUMENTATION SYMBOLS LEGEND |
| 95n00273.dgn | 95X-5900-N-00273 | SOUTH FIELD EXTRACTION SYSTEM INSTRUMENTATION CONTROL SYSTEM ARCHITECTURE |
| 95n00190.dgn | 95X-5900-N-00190 | SOUTH FIELD EXTRACTION SYSTEM MECHANICAL PROCESS PIPING AND INSTRUMENTATION DIAGRAM SHT. 1 OF 2 |
| 95xn2044.dgn | 95X-5500-N-02044 | WASTE STORAGE AREA EXTRACTION SYSTEM PHASE 1, AND SFES SUPPLEMENTAL WELL PIPING AND INSTRUMENTATION DIAGRAM WELL No's. 1,2 & 3 |
| 95xn2045.dgn | 95X-5500-N-02045 | WASTE STORAGE AREA EXTRACTION SYSTEM PHASE 1, AND SFES SUPPLEMENTAL WELL INSTRUMENTATION ARCHITECTURE DIAGRAM WELL HOUSE DCS PCS |

PRELIMINARY

000001

| NO. | REVISIONS | DATE | DWN. BY | APPD. | NO. | REVISIONS | DATE | DWN. BY | APPD. | REF. DWG. NO. |
|---|---|---|---|---|---|---|---|---|---|---|
| | | | | | A | ISSUED FOR ENGINEERING REVIEW | 1-10 | MWD | | 95X-5500-X-02002 |

NOTE: FLUOR FERNALD CADD DRAWING. DO NOT REVISE MANUALLY.

CONFIGURATION MANAGEMENT DRAWING — YES / NO
EXISTING STRUCTURES OR COMPONENTS CONFIRMED TO BE ACCURATE BY FIELD VERIFICATION STANDARD CONTROL SEE NOTES
COGNIZANT ENGINEER DATE

APPROVALS

| | | | | | |
|---|---|---|---|---|---|
| CIVIL & STR. | | | SAFETY ENG. | | |
| ELECTRICAL | | | MAINTENANCE | | |
| ENGINEER | | | FIRE PROTECT. | | |
| INSTRUMENT | | | WASTE MANAGE. | | |
| MECHANICAL | | | SECURITY | | |
| | | | PROJECTS | | |
| CHECKED | | | | | |
| APPROVED | | | | | |

Fernald Environmental Management Project
FLUOR FERNALD, INC.
U.S. DEPARTMENT OF ENERGY

ARWWP — SITE
WASTE STORAGE AREA EXTRACTION SYSTEM PHASE 1, AND SFES SUPPLEMENTAL WELL PROJECT TITLE & INDEX SHEET

RES 420
DATE APRIL 6, 2001
DRAWN M.W.DERROUGH
95X-5500-X-02002 A

FFS.DGN 3/12/00

FILE NAME: /res420/95xx2002.dgn

95xx2002.m schw0542 Wednesday April 11 2001 at 09:43:12 AM EDT

3671

## GENERAL LEGEND

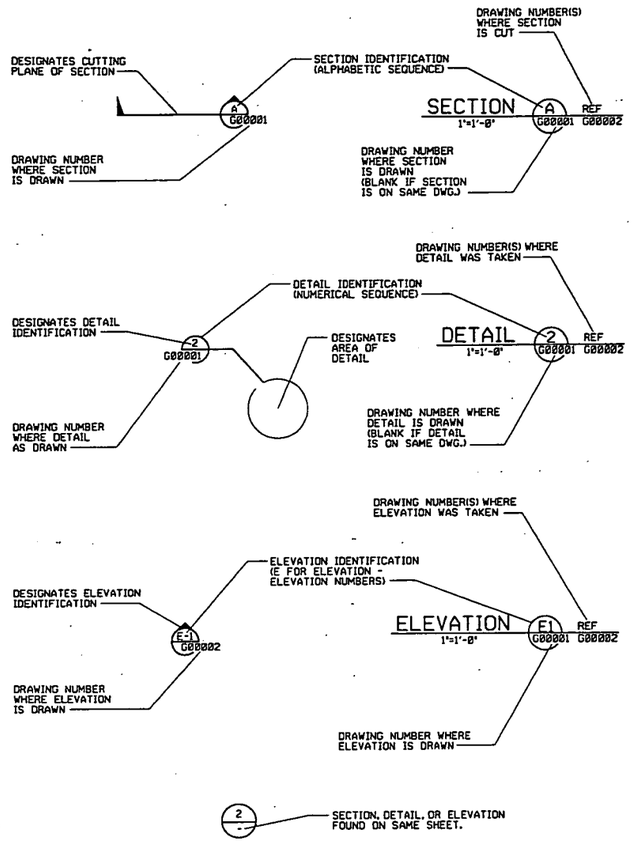


NOTE:

ABBREVIATED DRAWING NUMBERS WILL BE USED FOR ALL SECTIONS, DETAILS, ELEVATIONS, AND WITHIN NOTES AND CALL OUTS IN THE BODY OF THE DRAWING.

FOR EXAMPLE: 95X-5900-G-00002 = DRAWING NUMBER
G00002 = ABBREVIATED DRAWING NUMBER

DIMENSIONING:

DIMENSIONS AND/OR ELEVATIONS MARKED THUS (+/-) SHALL BE VERIFIED IN THE FIELD BY CONTRACTOR.

USE DIMENSIONS AS SHOWN, DO NOT SCALE.

NTS (NOT TO SCALE) IS SHOWN ONLY WHERE DIMENSION IS OBVIOUSLY OUT OF SCALE.

## ABBREVIATIONS

| | |
|---|---|
| AWWT | ADVANCED WASTEWATER TREATMENT |
| FEMP | FERNALD ENVIRONMENTAL MANAGEMENT PROJECT |
| SFES | SOUTH FIELD EXTRACTION SYSTEM |
| SPO | SOUTH PLUME OPTIMIZATION |
| ID | INJECTION DEMONSTRATION |
| SDR | SIDE WALL DIMENSION RATIO |

## CONSTRUCTION BY OTHERS

——— CONTOUR - MAJOR & MINOR
- - - - UTILITIES

## UTILITY SYMBOLS

| EXISTING | | PROPOSED |
|---|---|---|
| — — ST — — | STORM SEWER | —— ST —— |
| — — SN — — | SANITARY SEWER | —— SN —— |
| — — FG — — | FUEL GAS | —— FG —— |
| — — DW — — | DRINKING WATER | —— DW —— |
| — — FQ1 — — | FIRE PROTECTION | —— FQ1 —— |
| — — LS — — | LIVE STEAM | —— LS —— |
| — — WS — — | WATER SUPPLY | —— WS —— |
| — — WR — — | COOLING WATER RETURN | —— WR —— |
| — — TW — — | PROCESS WATER | —— TW —— |
| — — CE — — | CONTAMINATE WATER | —— CE —— |
| — — FT — — | FILTRATE OR EFFLUENT | —— FT —— |
| — — DF — — | DEIONIZED FEED | —— DF —— |
| — — PW — — | DEIONIZED WATER | —— PW —— |
| — — BR — — | BRINE | —— BR —— |
| — — RW — — | RAW WATER | —— RW —— |
| — — A — — | ALARM | —— A —— |
| — — CN — — | STEAM CONDENSATE | —— CN —— |
| — — VE — — | VENT LINES | —— VE —— |
| — — SD — — | SUB-SURFACE DRAINAGE | —— SD —— |
| — — SL — — | SUMP LIQUOR | —— SL —— |
| — — E — — | ELECTRICAL | —— E —— |
| — — OE —◇— | OVERHEAD ELECTRICAL | - — - — - — |
| — — T — — | TELEPHONE | —— T —— |
| — — G — — | ELECTRIC GROUND | —— G —— |
| — — PA — — | PLANT AIR | —— PA —— |
| — — SA — — | INSTRUMENT AIR SUPPLY | —— SA —— |
| - - - - - - - - - - | ABANDONED | |
| ———— | DISCHARGE | ———— |
| | TREATMENT | |

## BALLOON LEGEND

- PIV — POST INDICATOR VALVE
- SMH — SANITARY MANHOLE
- EMH — ELECTRICAL MANHOLE
- TMH — TELEPHONE MANHOLE
- CB — STORM SEWER CATCH BASIN
- HFH — HIGH PRESSURE FIRE HYDRANT
- LFH — LOW PRESSURE FIRE HYDRANT

## GRADING SYMBOLS

| EXISTING | | PROPOSED |
|---|---|---|
| | SPOT ELEVATION | X 589.4 |
| - - - - 584 - - - - - | CONTOUR - MINOR | 584 |
| - - - - 585 - - - - - | CONTOUR - MAJOR | 585 |
| (TOE) | SLOPE INDICATOR | (TOE) |

## SYMBOLS LEGEND

| EXISTING | | PROPOSED |
|---|---|---|
| | POST INDICATOR VALVE (PIV) | |
| | FIRE HYDRANT (FH) | |
| | MANHOLE (MH) | S OR D |
| | CATCH BASIN (CB) | D |
| | POLE | |
| | PIPE SUPPORT | |
| | ELECTRICAL MANHOLE | E |
| | TELEPHONE MANHOLE | T |
| | STREET WASHERS | |
| | VALVE BOX | |
| 1313 | MONITORING WELL | |
| | SURFACE DRAINAGE FLOW | |
| | GRAVEL ROADWAY/DRIVEWAY | |
| | ASPHALT ROADWAY/DRIVEWAY | |
| | CONCRETE PAD/ ROADWAY/DRIVEWAY | |
| | BUILDING/TRAILER | |
| | OU BOUNDARY | |
| | FENCE | |
| | TREE LINE | |
| | DECIDUOUS TREE | |
| | CONIFEROUS TREE | |
| | CENTERLINE DRAINAGE DITCH | |
| | RIVER/CREEK | |
| | TO BE REMOVED | |
| | SILT FENCE | |
| | ELECTRICAL TRANSFORMER | T |
| | TRANSMISSION TOWER | |
| | HEADWALL | OR |
| BM | BENCH MARK | |
| | CONSTRUCTION/WIND BARRIER FENCE | |
| | SIGN SINGLE/DOUBLE POST | |
| | BOLLARD/GUARD POST | |
| PB | ELECTRICAL PULL BOX | |
| | SURVEY CONTROL POINT | |
| | ROAD CENTERLINE OR BASELINE | |
| | BEND | OR |
| | TEE | |
| | THRUST BLOCK | |
| | REDUCER | |
| W OR U | UNKNOWN | |
| | STRAW BALE SILT BARRIER | |
| | GRAVEL EROSION CONTROL BARRIER | |
| | FENCE GATE | |
| | CONCRETE ENCASEMENT | |
| | EXTRACTION WELL (** IS NUMBER) | EW-** |

| REF DWG NO. | DRAWING TITLE |
|---|---|
| 95X-5500-X-02002 | DRAWING INDEX |
| | |
| | |

PRELIMINARY

000002

| NO. | REVISIONS | DATE | DWN. BY | APPD. | NO. | REVISIONS | DATE | DWN. BY | APPD. | REF. DWG. NO. |
|---|---|---|---|---|---|---|---|---|---|---|
| | | | | | A | ISSUED FOR ENGINEERING REVIEW | 4-9 | MWD | | 95X-5500-X-02002 |

NOTE: FLUOR FERNALD CADD DRAWING. DO NOT REVISE MANUALLY.

CONFIGURATION MANAGEMENT DRAWING — YES / NO
EXISTING STRUCTURES OR COMPONENTS SHOWN ON THIS DRAWING HAS BEEN CONFIRMED BY CONFIGURATION MANAGEMENT CONTROL. SEE NOTES.
COGNIZANT ENGINEER — DATE

APPROVALS

| | | | |
|---|---|---|---|
| CIVIL & STR. | | SAFETY ENG. | |
| ELECTRICAL | | MAINTENANCE | |
| ENGINEER | | FIRE PROTECT. | |
| INSTRUMENT | | WASTE MANAGE. | |
| MECHANICAL | | SECURITY | |
| | | PROJECTS | |
| CHECKED | | | |
| APPROVED | | | |

Fernald Environmental Management Project
FLUOR FERNALD, INC.
U.S. DEPARTMENT OF ENERGY

ARWWP — SITE
WASTE STORAGE AREA EXTRACTION SYSTEM
PHASE I, AND SFES SUPPLEMENTAL WELL
CIVIL LEGEND & SYMBOLS

RES 428 — DATE APRIL 6, 2001 — DRAWN M.W.DERROUGH — 95X-5500-G-02003 — A

FILE NAME: res428/95xg2003.dgn

FFS.DGN 3/22/00

95xg2003.m schw0542 Monday April 09 2001 at 08:12:43 AM EDT

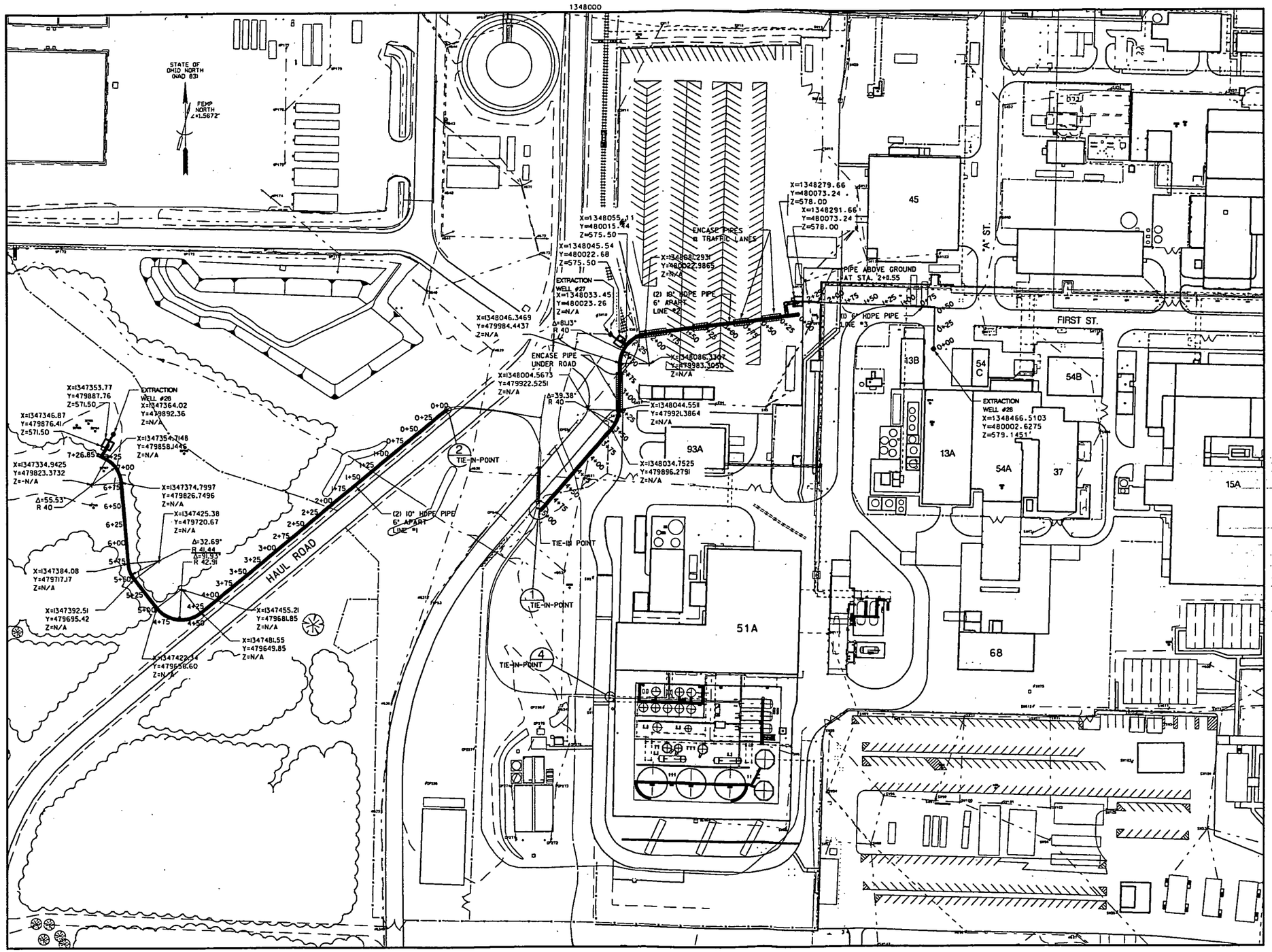


CENTER LINE COORD. LINE #1

| STA | X | Y | Z |
|---|---|---|---|
| 0+00 | 1347815.18 | 479923.06 | 0.00 |
| 0+25 | 1347795.22 | 479908.14 | 0.00 |
| 0+50 | 1347775.92 | 479892.25 | 0.00 |
| 0+75 | 1347756.62 | 479876.36 | 0.00 |
| 1+00 | 1347737.32 | 479860.46 | 0.00 |
| 1+25 | 1347718.02 | 479844.57 | 0.00 |
| 1+50 | 1347698.72 | 479828.68 | 0.00 |
| 1+75 | 1347679.42 | 479812.79 | 0.00 |
| 2+00 | 1347660.12 | 479796.90 | 0.00 |
| 2+25 | 1347640.83 | 479781.01 | 0.00 |
| 2+50 | 1347621.53 | 479765.11 | 0.00 |
| 2+75 | 1347602.23 | 479749.22 | 0.00 |
| 3+00 | 1347582.93 | 479733.33 | 0.00 |
| 3+25 | 1347563.63 | 479717.44 | 0.00 |
| 3+50 | 1347544.33 | 479701.55 | 0.00 |
| 3+75 | 1347525.03 | 479685.66 | 0.00 |
| 4+00 | 1347505.73 | 479669.76 | 0.00 |
| 4+25 | 1347486.43 | 479653.87 | 0.00 |
| 4+50 | 1347464.99 | 479641.57 | 0.00 |
| 4+75 | 1347440.41 | 479643.13 | 0.00 |
| 5+00 | 1347421.02 | 479658.32 | 0.00 |
| 5+25 | 1347405.79 | 479678.15 | 0.00 |
| 5+50 | 1347390.66 | 479698.04 | 0.00 |
| 5+75 | 1347383.70 | 479721.72 | 0.00 |
| 6+00 | 1347381.59 | 479746.64 | 0.00 |
| 6+25 | 1347379.48 | 479771.55 | 0.00 |
| 6+50 | 1347377.37 | 479796.46 | 0.00 |
| 6+75 | 1347375.26 | 479821.37 | 0.00 |
| 7+00 | 1347368.52 | 479845.11 | 0.00 |
| 7+25 | 1347349.65 | 479861.03 | 0.00 |

CENTER LINE COORD. LINE #2

| STA | X | Y | Z |
|---|---|---|---|
| 0+00 | 1348286.60 | 480049.05 | 0.00 |
| 0+25 | 1348261.80 | 480045.90 | 0.00 |
| 0+50 | 1348237.00 | 480042.75 | 0.00 |
| 0+75 | 1348212.20 | 480039.61 | 0.00 |
| 1+00 | 1348187.40 | 480036.46 | 0.00 |
| 1+25 | 1348162.60 | 480033.31 | 0.00 |
| 1+50 | 1348137.80 | 480030.16 | 0.00 |
| 1+75 | 1348112.99 | 480027.01 | 0.00 |
| 2+00 | 1348088.19 | 480023.86 | 0.00 |
| 2+25 | 1348064.50 | 480016.82 | 0.00 |
| 2+50 | 1348049.02 | 479997.71 | 0.00 |
| 2+75 | 1348046.02 | 479973.05 | 0.00 |
| 3+00 | 1348045.31 | 479948.06 | 0.00 |
| 3+25 | 1348044.60 | 479923.07 | 0.00 |
| 3+50 | 1348037.32 | 479899.56 | 0.00 |
| 3+75 | 1348021.09 | 479880.56 | 0.00 |
| 4+00 | 1348004.68 | 479861.69 | 0.00 |
| 4+25 | 1347988.28 | 479842.83 | 0.00 |
| 4+50 | 1347971.87 | 479823.96 | 0.00 |
| 4+75 | 1347955.47 | 479805.10 | 0.00 |
| 5+00 | 1347939.56 | 479786.80 | 0.00 |

CENTER LINE COORD. LINE #3

| STA | X | Y | Z |
|---|---|---|---|
| 0+00 | 1348466.51 | 480002.63 | 0.00 |
| 0+25 | 1348466.78 | 480027.62 | 0.00 |
| 0+50 | 1348467.36 | 480052.62 | 0.00 |
| 0+75 | 1348448.51 | 480059.46 | 0.00 |
| 1+00 | 1348423.53 | 480060.56 | 0.00 |
| 1+25 | 1348398.55 | 480061.60 | 0.00 |
| 1+50 | 1348373.57 | 480062.60 | 0.00 |
| 1+75 | 1348348.60 | 480063.68 | 0.00 |
| 2+00 | 1348323.62 | 480064.84 | 0.00 |
| 2+25 | 1348298.65 | 480065.94 | 0.00 |
| 2+36 | 1348287.80 | 480066.36 | 0.00 |

3671

| NO. | REVISIONS | DATE | DWN. | BY | APPD. | NO. | REVISIONS | DATE | DWN. | BY | APPD. | REF. DWG. NO. |
|---|---|---|---|---|---|---|---|---|---|---|---|---|
| | | | | | | A | ISSUED FOR ENGINEERING REVIEW | 1-5-0 | JML | | | 95X-5500-X-02002 |

NOTE: FLUOR FERNALD CADD DRAWING. DO NOT REVISE MANUALLY.

CONFIGURATION MANAGEMENT DRAWING — EXISTING STRUCTURES ON CONTRACTOR DRAWINGS ARE PROVIDED AS AN CONFIGURATION MANAGEMENT CONTROL. SEE NOTES.

COGNIZANT ENGINEER DATE

APPROVALS: CIVIL & STR. / ELECTRICAL / ENGINEER / INSTRUMENT / MECHANICAL / SAFETY ENG. / MAINTENANCE / FIRE PROTECT. / WASTE MANAGE. / SECURITY / PROJECTS / CHECKED / APPROVED

Fernald Environmental Management Project

FLUOR FERNALD, INC.

U.S. DEPARTMENT OF ENERGY

ARWWP — SITE

WASTE STORAGE AREA EXTRACTION SYSTEM PHASE I, AND SFES SUPPLEMENTAL WELL SITE UTILITY PLAN

RES 429 — DATE JAN. 26, 2001 — DRAWN MIKE LOCKE — 95X-5500-C-02004 — A

FILE NAME: /RES4211/95XC2004.DGN — TIME-09:57:12 DATE-APR. 5, 2001

FF3.DGN 3/22/00

95xg2004.m schw0542 Thursday April 19 2001 at 09:57:40 AM EDT

3671

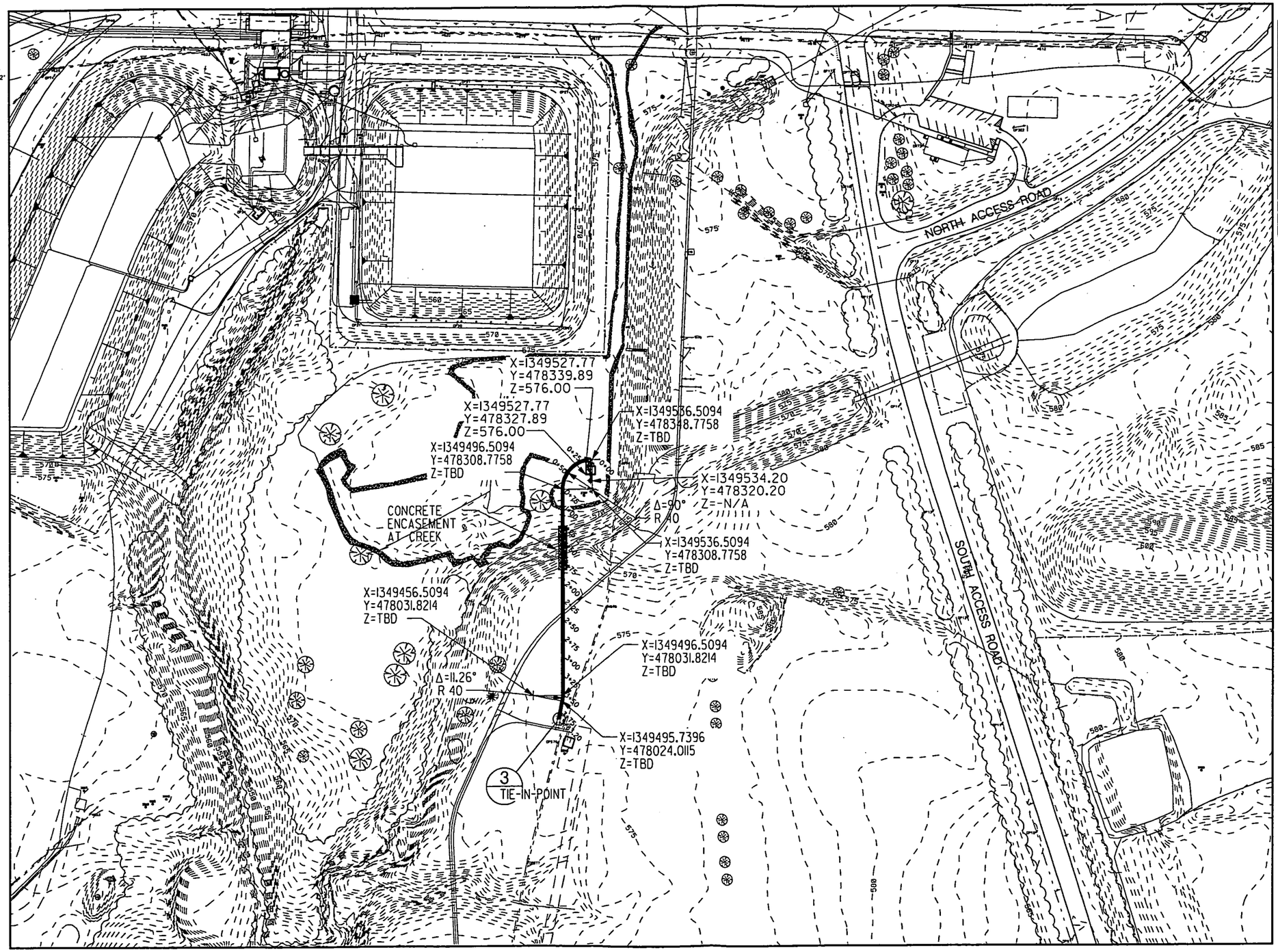


| STA. | "X" | "Y" | "Z" |
|---|---|---|---|
| 0+00 | 1349546.60 | 478348.78 | 0.00 |
| 0+25 | 1349521.94 | 478346.03 | 0.00 |
| 0+50 | 1349502.90 | 478330.46 | 0.00 |
| 0+75 | 1349496.51 | 478306.69 | 0.00 |
| 1+00 | 1349496.51 | 478281.69 | 0.00 |
| 1+25 | 1349496.51 | 478256.69 | 0.00 |
| 1+50 | 1349496.51 | 478231.69 | 0.00 |
| 1+75 | 1349496.51 | 478206.69 | 0.00 |
| 2+00 | 1349496.51 | 478181.69 | 0.00 |
| 2+25 | 1349496.51 | 478156.69 | 0.00 |
| 2+50 | 1349496.51 | 478131.69 | 0.00 |
| 2+75 | 1349496.51 | 478106.69 | 0.00 |
| 3+00 | 1349496.51 | 478081.69 | 0.00 |
| 3+25 | 1349496.51 | 478056.69 | 0.00 |
| 3+50 | 1349496.51 | 478031.69 | 0.00 |
| 3+75 | 1349492.37 | 478007.08 | 0.00 |
| 3+83.2 | 1349490.77 | 477999.03 | 0.00 |

PRELIMINARY

0' 100' 200'
SCALE BAR
NAD83

000004

| NO. | REVISIONS | DATE | DWN. BY | APPD. | NO. | REVISIONS | DATE | DWN. BY | APPD. | REF. DWG. NO. |
|---|---|---|---|---|---|---|---|---|---|---|
| | | | | | A | ISSUED FOR ENGINEERING REVIEW | 3-30 | JML | | 95X-5500-X-02002 |

NOTE: FLUOR FERNALD CADD DRAWING. DO NOT REVISE MANUALLY.

CONFIGURATION MANAGEMENT DRAWING — YES / NO
ATTENTION: STRUCTURES OR COMPONENTS SHOWN HERE ARE SUBJECT TO CONFIGURATION MANAGEMENT CONTROL. SEE NOTES.
COGNIZANT ENGINEER DATE

| APPROVALS | | | |
|---|---|---|---|
| CIVIL & STR. | | SAFETY ENG. | |
| ELECTRICAL | | MAINTENANCE | |
| ENGINEER | | FIRE PROTECT. | |
| INSTRUMENT | | WASTE MANAGE | |
| MECHANICAL | | SECURITY | |
| | | PROJECTS | |
| CHECKED | | | |
| APPROVED | | | |

Fernald Environmental Management Project
FLUOR FERNALD, INC.
U.S. DEPARTMENT OF ENERGY

ARWWP — SITE
WASTE STORAGE AREA EXTRACTION SYSTEM
PHASE I, AND SFES SUPPLEMENTAL WELL
SITE UTILITY PLAN

RES 428 | DATE JAN. 26, 2000 | DRAWN MIKE LOCKE | 95X-5500-G-02005 | A

FILE NAME: /RES428/95XG2005.DGN TIME=09:56:48 DATE=Apr. 6, 2000

FF6.DGN 3/22/00

95xg2005.m schw0542 Thursday April 19 2001 at 10:00:56 AM EDT

3671

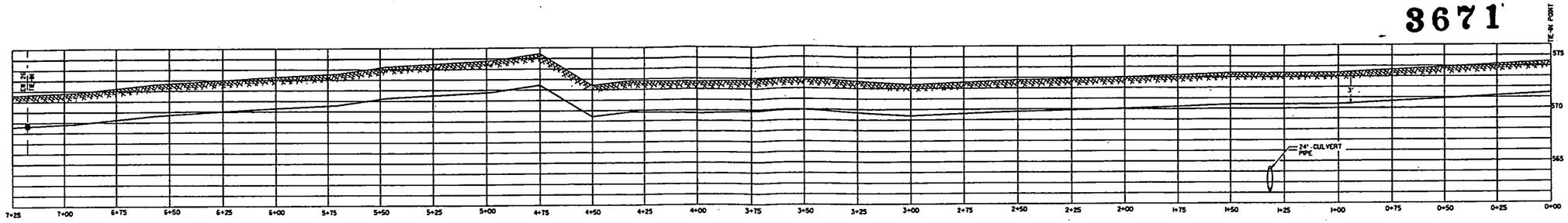


LINE #1
SCALE: VERT - 1/4"=1' HORZ - 1/4"=5'

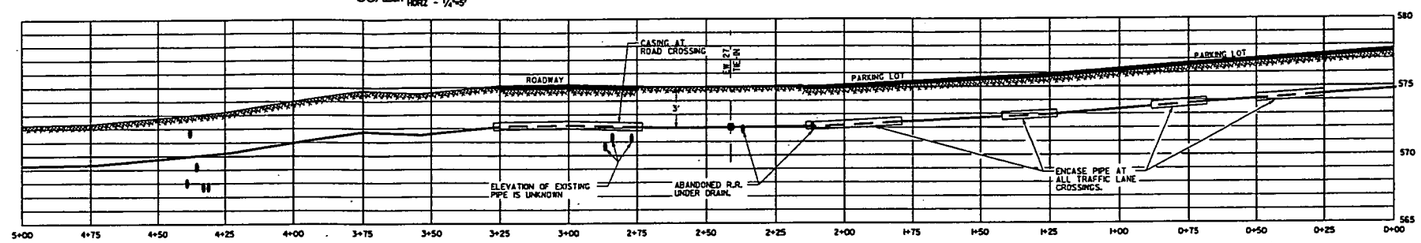


LINE #2
SCALE: VERT - 1/4"=1' HORZ - 1/4"=5'

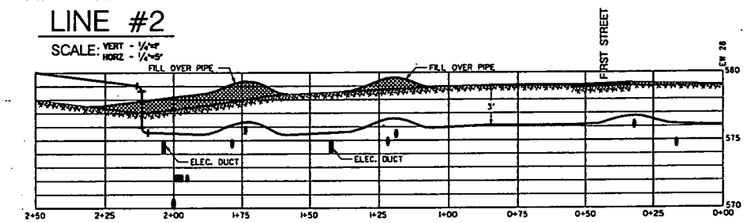


LINE #3
SCALE: VERT - 1/4"=1' HORZ - 1/4"=5'

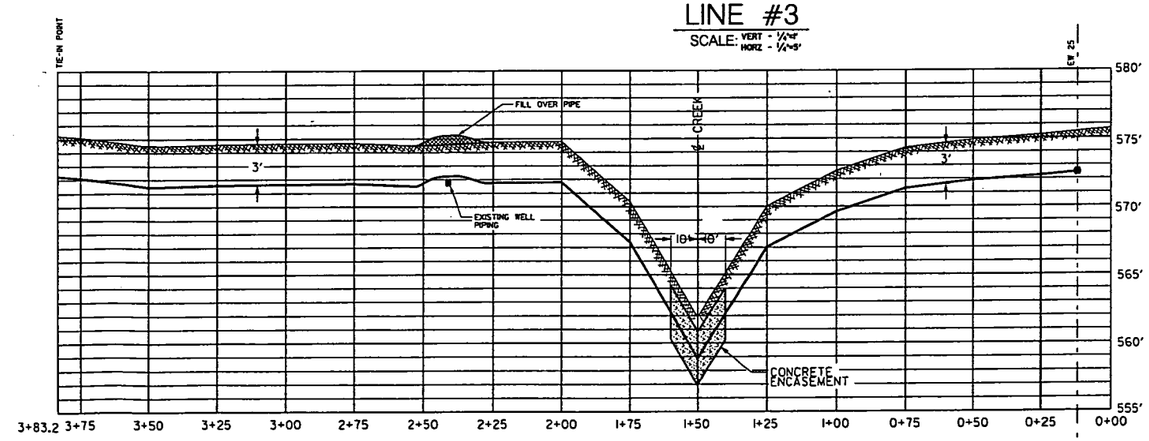


LINE #4
SCALE: VERT - 1/4"=1' HORZ - 1/4"=5'

PRELIMINARY

000005

| NO. | REVISIONS | DATE | DWN. BY | APPD. | NO. | REVISIONS | DATE | DWN. BY | APPD. | REF. DWG. NO. |
|---|---|---|---|---|---|---|---|---|---|---|
| | | | | | A | ISSUED FOR ENGINEERING REVIEW | 3-8-01 | JML | | 95X-5500-X-02002 |

NOTE: FLUOR FERNALD CADD DRAWING, DO NOT REVISE MANUALLY.

CONFIGURATION MANAGEMENT DRAWING — YES / NO
SYSTEMS, STRUCTURES OR COMPONENTS DEPICTED ON THIS DRAWING ARE UNDER CONFIGURATION MANAGEMENT CONTROL. SEE NOTES.
COGNIZANT ENGINEER DATE

APPROVALS

| | | | |
|---|---|---|---|
| CIVIL & STR. | | SAFETY ENG. | |
| ELECTRICAL | | MAINTENANCE | |
| ENGINEER | | FIRE PROTECT. | |
| INSTRUMENT | | WASTE MANAGE | |
| MECHANICAL | | SECURITY | |
| | | PROJECTS | |
| CHECKED | | | |
| APPROVED | | | |

Fernald Environmental Management Project
FLUOR FERNALD, INC.
U.S. DEPARTMENT OF ENERGY

ARWWP — SITE
WASTE STORAGE AREA EXTRACTION SYSTEM PHASE I, AND SFES SUPPLEMENTAL WELL PROFILES

RES 429
DATE MAR. 7, 2001
DRAWN MIKE LOCKE
95X-5500-G-02006 A

FILE NAME: /res429/95xg2006.dgn TIME-09:57:57 DATE-Apr. 4, 2002

FFS.DGN 3/22/00

95xg2006.m schw0542 Wednesday April 11 2001 at 10:08:28 AM EDT

3671

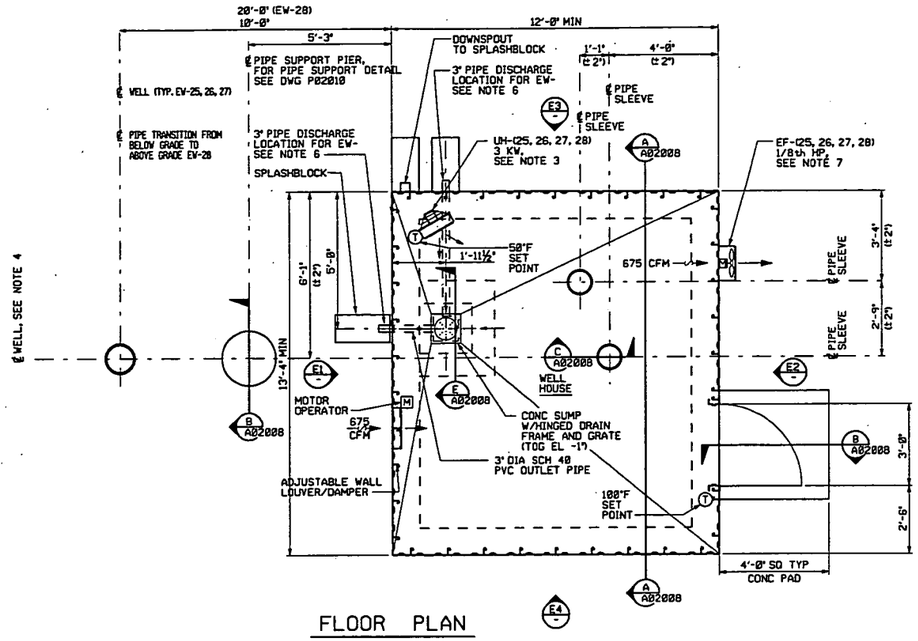


FLOOR PLAN

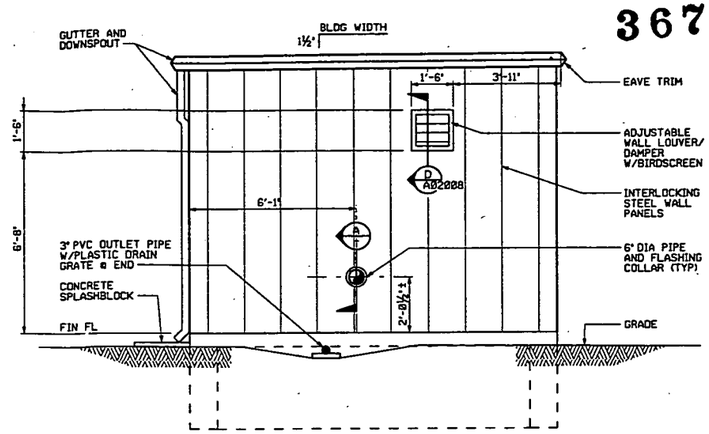


ELEVATION E1

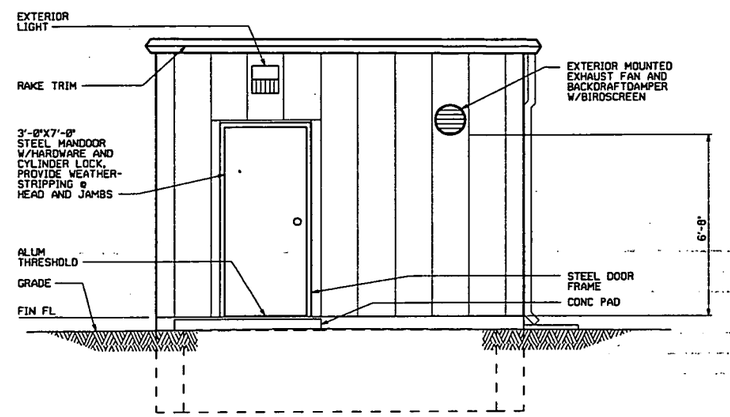


ELEVATION E2

1. SEE SPECIFICATION SECTION 15500 FOR EXHAUST FAN AND UNIT HEATER INFORMATION.
2. THE ADJUSTABLE LOUVER/DAMPER MOTOR OPERATORS SHALL BE INTERLOCKED WITH THE EXHAUST FAN.
3. THE EXHAUST FAN AND UNIT HEATER SHALL HAVE THE SAME EQUIPMENT TAG NUMBER AS THE WELL HOUSE NUMBER. ALL UNIT HEATERS SHALL BE INSTALLED A MINIMUM OF 6'-8" CLEAR ABOVE FINISH FLOOR.
4. SEE DRAWINGS 95X-5500-P-02004 & 95X-5500-P-02005. FOR CENTERLINE OF WELL COORDINATES AND FINISH FLOOR ELEVATIONS. LOCATE WELL HOUSE BASED ON THESE COORDINATES.
5. THE CONTRACTORS SHALL LOCATE THE 3" OUTLET PIPE/SLASHBLOCK ON THE SIDE OF WELL HOUSES EW-3 AND EW-4 AS INDICATED.
6. THE EXHAUST FAN AND THE BACKDRAFT DAMPER SHALL BE EXTERIOR MOUNTED IN A WEATHERTIGHT HOUSING, AND ADDITIONAL ANGLE SUPPORTS ADDED IF REQUIRED. SUPPORTS MUST BE ATTACHED TO RIBS OF SIDING ONLY, USING WEATHERTIGHT FASTENERS.
7. SLOPE FLOOR TO PROVIDE POSITIVE DRAINAGE TO SUMP.

| REF DWG NO. | DRAWING TITLE |
|---|---|
| 95X-5500-X-02002 | DRAWING INDEX |
| 95X-5500-G-02003 | LEGEND AND SYMBOLS |
| 95X-5500-G-02004 | SITE UTILITY PIPING PLAN |
| 95X-5500-G-02005 | SITE UTILITY PIPING PLAN |
| 95X-5500-A-02008 | SECTIONS AND DETAILS |
| 95X-5500-P-02010 | PIPE SUPPORT DETAILS |
| 95X-5500-E-02038 | 480/120V POWER, INSTRUMENT, AND LIGHTING PLAN |
| | |
| | |

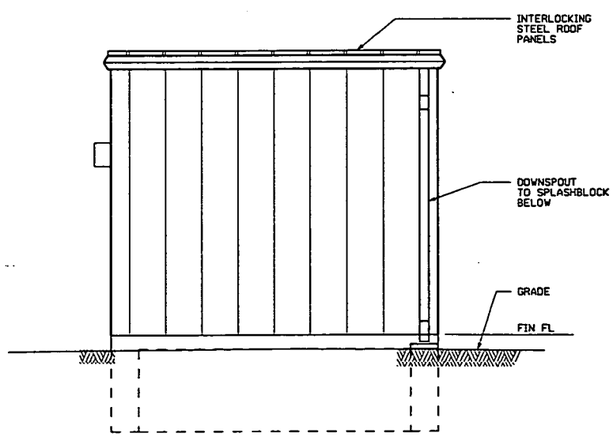


ELEVATION E3

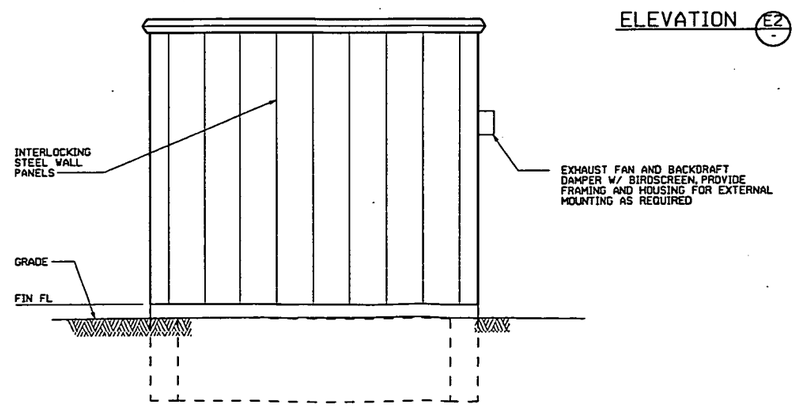


ELEVATION E4

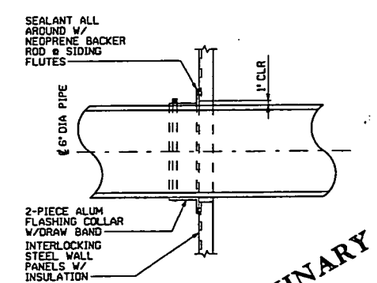


SECTION
1"=1'-0"

PRELIMINARY

000006

| NO. | REVISIONS | DATE | DWN. BY | APPD. | NO. | REVISIONS | DATE | DWN. BY | APPD. | REF. DWG. NO. |
|---|---|---|---|---|---|---|---|---|---|---|
| | | | | | A | ISSUED FOR ENGINEERING REVIEW | 4-0 | GES | | 95X-5500-X-02002 |

NOTE: FLUOR FERNALD CADD DRAWING. DO NOT REVISE MANUALLY.

CONFIGURATION MANAGEMENT DRAWING — YES / NO
SECTIONS, STRUCTURES OR COMPONENTS SHOWN ON THIS DRAWING ARE UNDER CONFIGURATION MANAGEMENT CONTROL. SEE NOTES.
COGNIZANT ENGINEER — DATE

APPROVALS

| | | | |
|---|---|---|---|
| CIVIL & STR. | | SAFETY ENG. | |
| ELECTRICAL | | MAINTENANCE | |
| ENGINEER | | FIRE PROTECT. | |
| INSTRUMENT | | WASTE MANAGE. | |
| MECHANICAL | | SECURITY | |
| | | PROJECTS | |
| CHECKED | | | |
| APPROVED | | | |

Fernald Environmental Management Project
FLUOR FERNALD, INC.
U.S. DEPARTMENT OF ENERGY

ARWNP — SITE
WASTE STORAGE AREA EXTRACTION SYSTEM
PHASE I, AND SFES SUPPLEMENTAL WELL
ARCHITECTURAL PLAN AND ELEVATIONS, WELL HOUSE No's. 1 THRU 4

RES. 421
DATE APRIL 6, 2001
DRAWN G. SCHWARZMAN
95X-5500-A-02007 A

FILE NAME: res421/95xa2007.dgn

FF&DGN 3/22/00

95xa2007.m schw0542 Monday April 09 2001 at 08:31:54 AM EDT

3671

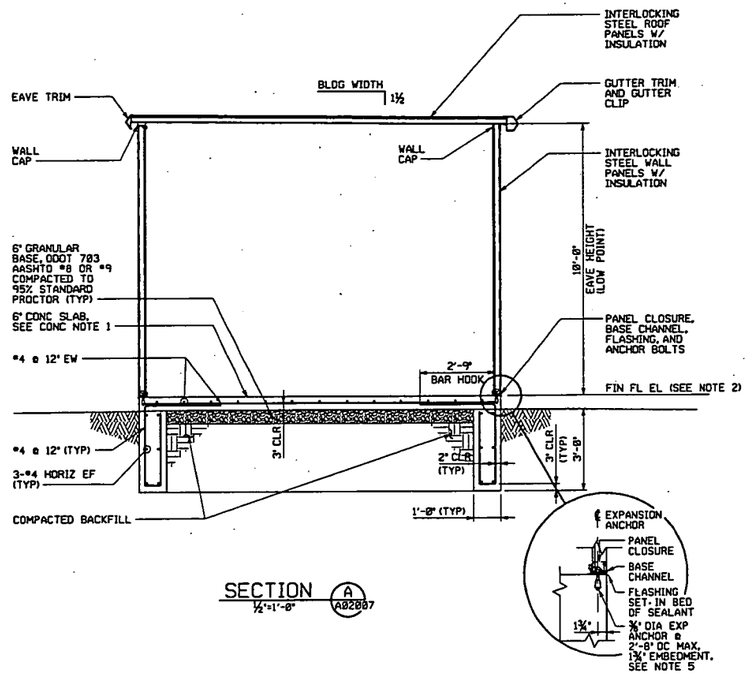


SECTION A (½"=1'-0") A02007

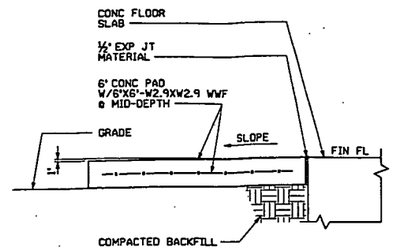


SECTION B (1"=1'-0") A02007

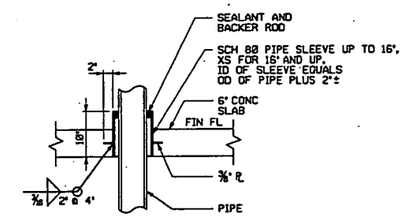


TYP PIPE SLEEVE SECTION C (1"=1'-0") A02007

1. FOR GROUNDING SYSTEM CONNECTION TO REINFORCEMENT, SEE DRAWING 95X-5500-E-02032.
2. SEE CIVIL DRAWING 95X-5500-P-02004 AND 95X-5500-P-02005 FOR FINISH FLOOR ELEVATIONS FOR WELL HOUSE 25, 26, 27, 28.

GENERAL CONCRETE NOTES

1. DESIGN, MATERIAL AND WORKMANSHIP SHALL BE IN ACCORDANCE WITH SPECIFICATION SECTION 03001.
2. CONCRETE FOR SLAB ON GRADE SHALL HAVE A MINIMUM COMPRESSIVE STRENGTH OF 4000 PSI AT 28 DAYS. CONCRETE FOR FOUNDATIONS AND MISCELLANEOUS PADS SHALL HAVE A MINIMUM COMPRESSIVE STRENGTH OF 3000 PSI AT 28 DAYS.
3. REINFORCING STEEL SHALL CONFORM TO ASTM SPECIFICATION A-615, GRADE 60.
4. FOUNDATION DESIGN IS BASED ON ASSUMED NET SOIL BEARING PRESSURE ALLOWABLE OF 2000 PSF. SITE SPECIFIC GEOLOGICAL INVESTIGATION WAS NOT PERFORMED. IF ANY SOFT, WET, ORGANIC OR LOOSE SOIL OR ANY OLD FILL IS ENCOUNTERED, THE FDF CONSTRUCTION MANAGER SHALL BE INFORMED AND THE CONDITIONS RESOLVED BEFORE CONTINUATION OF CONCRETE WORK.
5. ANCHOR BOLTS FOR PRE-ENGINEERED BUILDING AS SHOWN WERE DETERMINED USING PARKLINE BUILDING CATALOG INFORMATION. ANCHOR BOLT LOCATIONS SHALL BE CONFIRMED BY SELECTED PRE-ENGINEERED BUILDING VENDOR'S CERTIFIED DRAWINGS, BEFORE CONSTRUCTION OF THE FOUNDATION.
6. HOLD PLAN DIMENSION OF CONCRETE FOUNDATION +¼", -0" FOR ANCHOR BOLT EDGE DISTANCE REQUIREMENTS.

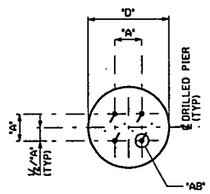


CONC PIER PLAN
1"=1'-0"

PIER SCHEDULE

| WELL HOUSE NO. | "D" | "A" | ½"/"A" | "B" | "AB" |
|---|---|---|---|---|---|
| 25 | 18" | 6" | 3" | #5 | ½" |
| 26 | 18" | 6" | 3" | #5 | ½" |
| 27 | 18" | 6" | 3" | #5 | ½" |
| 28 | 18" | 6" | 3" | #5 | ½" |
| | | | | | |
| | | | | | |

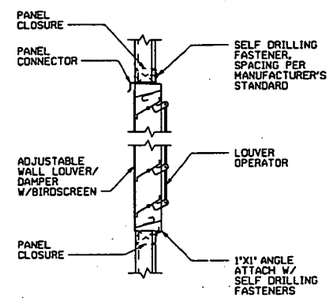


SECTION D (1½"=1'-0") A02007

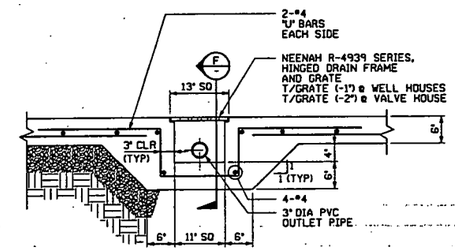


SECTION E (1½"=1'-0") A02007

| REF DWG NO. | DRAWING TITLE |
|---|---|
| 95X-5500-X-02002 | DRAWING INDEX |
| 95X-5500-G-02003 | LEGEND AND SYMBOLS |
| 95X-5500-G-02004 | SITE UTILITY PIPING PLAN |
| 95X-5500-G-02005 | SITE UTILITY PIPING PLAN |
| 95X-5500-A-02007 | PLAN AND ELEVATIONS |
| 95X-5500-E-02038 | 480/120V POWER, INSTRUMENT, AND LIGHTING PLAN |
| | |
| | |
| | |

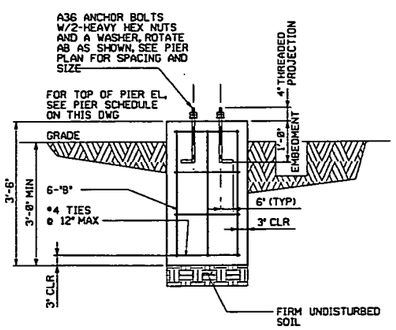


SECTION B (1"=1'-0") A02007

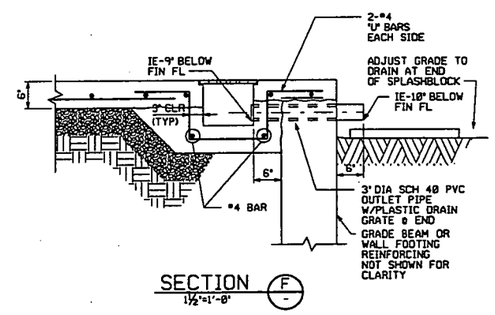


SECTION F (1½"=1'-0") -

PRELIMINARY

000007

| NO. | REVISIONS | DATE | DWN. | BY | APPD. | NO. | REVISIONS | DATE | DWN. | BY | APPD. | REF. DWG. NO. |
|---|---|---|---|---|---|---|---|---|---|---|---|---|
| | | | | | | A | ISSUED FOR ENGINEERING REVIEW | 4-9-0 | GES | | | 95X-5500-X-02002 |

NOTE: FLUOR FERNALD CADD DRAWING, DO NOT REVISE MANUALLY.

CONFIGURATION MANAGEMENT DRAWING — USER / SET — EXISTING ATTACHED OR COMPONENTS REFERENCED ON THIS DRAWING ARE UNDER CONFIGURATION MANAGEMENT CONTROL. SEE NOTES.

COGNIZANT ENGINEER DATE

APPROVALS: CIVIL & STR., ELECTRICAL, ENGINEER, INSTRUMENT, MECHANICAL, CHECKED, APPROVED; SAFETY ENG., MAINTENANCE, FIRE PROTECT., WASTE MANAGE., SECURITY, PROJECTS

Fernald Environmental Management Project

FLUOR FERNALD, INC.

U.S. DEPARTMENT OF ENERGY

ARWWP — SITE

WASTE STORAGE AREA EXTRACTION SYSTEM PHASE I, AND SFES SUPPLEMENTAL WELL ARCHITECTURAL SECTIONS AND DETAILS, WELL HOUSE No's. 1 THRU 4

RES 428 — DATE APRIL 6, 200 — DRAWN G. SCHWARZMAN — 95X-5500-A-02008 — A

FILE NAME: res428/95xa2008.dgn

FFBLDGN 3/22/00

95xa2008.m schw0542 Monday April 09 2001 at 08:36:03 AM EDT

3671'

1. SEE "TABLE A" FOR PUMP, LINE, INSTRUMENT, VALVE NUMBERS AND HIGH POINT FINISHED FLOOR ELEVATION.
2. SEE 95X-5500-G-02004 & 95X-5500-G-02005 SITE UTILITY PIPING PLAN DRAWINGS FOR ACTUAL WELL HOUSE ORIENTATIONS.
3. VENT LINE SHALL BE 1" FIELD ROUTE LINE TO 1'-0" ABOVE FLOOR AND PROVIDE PIPE SUPPORT.
4. FOR P&IDS SEE DRAWINGS 95X-5900-N-00190 AND 95X-5500-N-00044.
5. USE FLAT FACED FLANGE FOR MATING TO PUMP DISCHARGE FLANGE ONLY.
6. WELLS EW-25, 26, 27 & 28 THE FIT IS ALSO THE PRIMARY FLOW ELEMENT (FE).

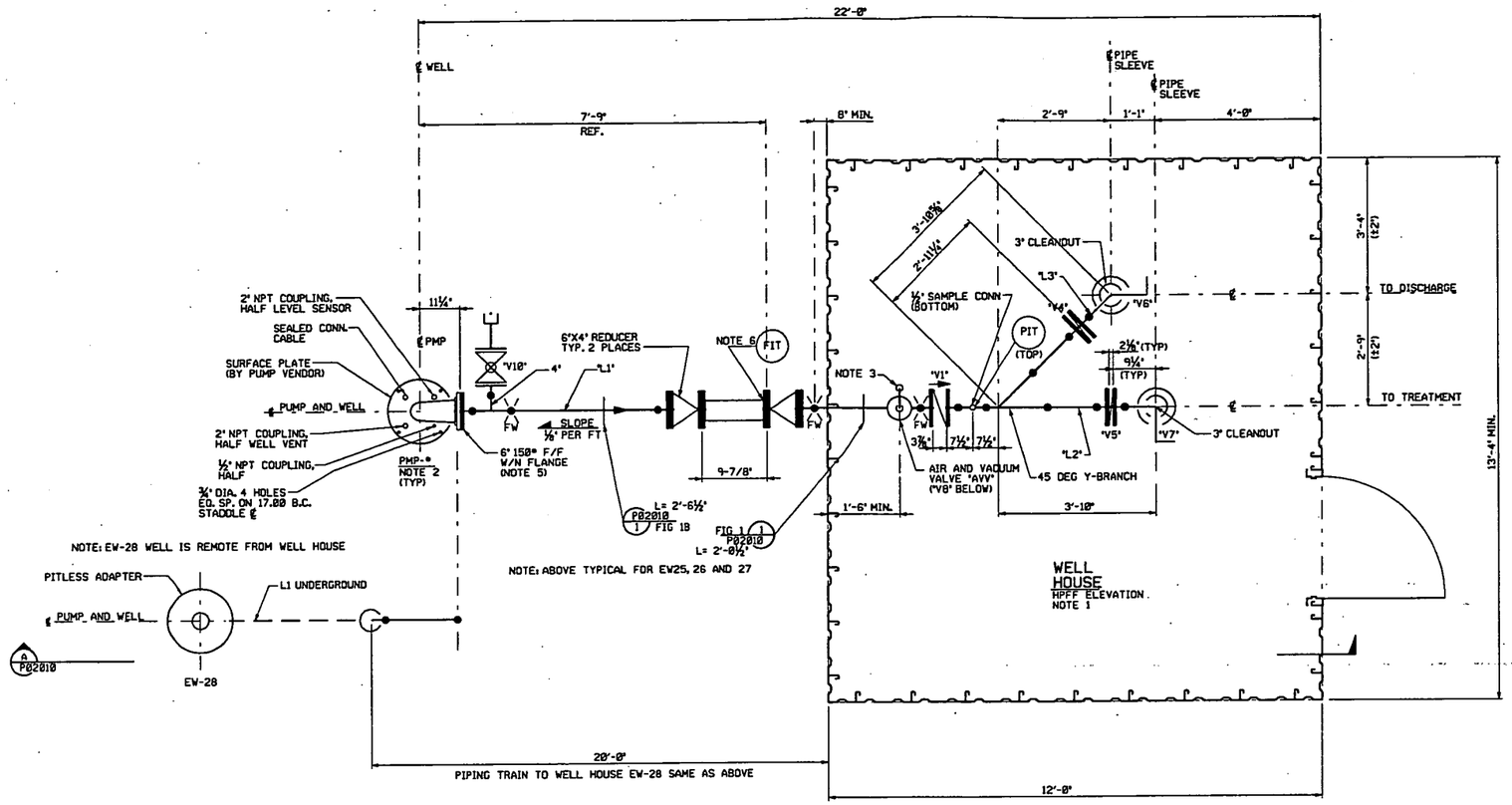


WELL HOUSE PLAN
SCALE : ¾" = 1'-0"

| REF DWG NO. | DRAWING TITLE |
|---|---|
| 95X-5500-X-02002 | DRAWING INDEX |
| | |
| | |

TABLE "A"

| PMP* | "L1" | "L2" | "L3" | "LT" | "FIT" | "PIT" | "V1" | "V2" | "V3" | "V4" | "V5" | "V6" | "V7" | "V8" | "V9" | "V10" | "AVV" | HPFF ELEVATION |
|---|---|---|---|---|---|---|---|---|---|---|---|---|---|---|---|---|---|---|
| 25 | GW-6"-A-2933 | GW-6"-A-2933-IC | GW-6"-A-2934-IC | 053 | 053 | 053 | V357 | V358 | V359 | V360 | V361 | V362 | V363 | V364 | V365 | V366 | 25 | ? |
| 26 | GW-6"-A-2935 | GW-6"-A-2935-IC | GW-6"-A-2936-IC | 056 | 056 | 056 | V367 | V368 | V369 | V370 | V371 | V372 | V373 | V374 | V375 | V376 | 26 | ? |
| 27 | GW-6"-A-2937 | GW-6"-A-2937-IC | GW-6"-A-2938-IC | 059 | 059 | 059 | V377 | V378 | V379 | V380 | V381 | V382 | V383 | V384 | V385 | V386 | 27 | ? |
| 28 | GW-6"-A-2939 | GW-6"-A-2939-IC | GW-6"-A-2940-IC | 062 | 062 | 062 | V387 | V388 | V389 | V390 | V391 | V392 | V393 | V394 | V395 | V396 | 28 | ? |

PRELIMINARY

000008

| NO. | REVISIONS | DATE | DWN. BY | APPD. | NO. | REVISIONS | DATE | DWN. BY | APPD. | REF. DWG. NO. |
|---|---|---|---|---|---|---|---|---|---|---|
| | | | | | A | ISSUED FOR ENGINEERING REVIEW | 1-10 | GES | | 95X-5500-X-02002 |

NOTE: FLUOR FERNALD CADD DRAWING. DO NOT REVISE MANUALLY.

CONFIGURATION MANAGEMENT DRAWING — EFFECTS STRUCTURES OR COMPONENTS SUBJECT TO CONFIGURATION MANAGEMENT CONTROL. SEE NOTES.

COGNIZANT ENGINEER DATE

APPROVALS: CIVIL & STR. / ELECTRICAL / ENGINEER / INSTRUMENT / MECHANICAL / CHECKED / APPROVED / SAFETY ENG. / MAINTENANCE / FIRE PROTECT. / WASTE MANAGE / SECURITY / PROJECTS

Fernald Environmental Management Project
FLUOR FERNALD, INC.
U.S. DEPARTMENT OF ENERGY

ARWWP — SITE
WASTE STORAGE AREA EXTRACTION SYSTEM
PHASE I, AND SFES SUPPLEMENTAL WELL
PIPING/PLANT DESIGN
WELL HOUSE PIPING PLAN

RES 428 | DATE APRIL 6, 2001 | DRAWN G. SCHWARZMAN | 95X-5500-P-02009 | A

FFS.DGN 3/22/00

FILE NAME: res428/95xp2009.dgn

95xp2009.m schw0542 Monday April 09 2001 at 08:41:02 AM EDT

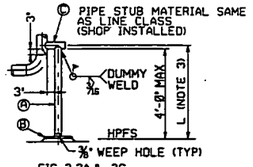


FIG 3,3A,& 3G
(SEE DETAIL 1A)

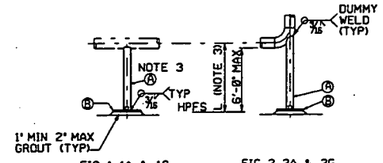


FIG 1, 1A, & 1G
(SEE DETAIL 1A)

FIG 2, 2A, & 2G
(SEE DETAIL 1)

| LINE SIZE | Ⓐ SUPPORTING PIPE SIZE | Ⓑ PIPE SUPPORT BASE PLATE | Ⓒ PIPE STUB SIZE | Ⓓ | Ⓔ | Ⓕ | Ⓖ LOWER BASE PLATE | Ⓣ |
|---|---|---|---|---|---|---|---|---|
| 1 1/2, 2 | 1-1/2 XS | 6X 6X 1/2 | 1-1/2 XS | 1/2 | 1/4 | 4 | 12 X 12 X 1/2 | 1/2 |
| 3,4 | 2 XS | 8X 8X 1/2 | 3 STD WT | 1/2 | 1/4 | 4 | 12 X 12 X 1/2 | 1/2 |
| 6,8 | 3 STD WT | 8X 8X 1/2 | 4 STD WT | 1/2 | 3/8 | 6 | 14 X 14 X 1/2 | 3/4 |
| 10,12 | 4 STD WT | 10X10 X 1/2 | 6 STD WT | 1/2 | 3/8 | 8 | 16 X 16 X 1/2 | 1 |
| 14,16 | 6 STD WT | 12X12 X 3/4 | 8 STD WT | 3/4 | 3/8 | 8 | 18 X 18 X 3/4 | 1 |
| 18,20 | 10 STD WT | 15 X 15 X 1 | SEE | 3/4 | 1/2 | 8 | 21 X 21 X 1 | 1-1/4 |
| 24 | 12 STD WT | 16 X 16 X 1 | NOTE 4 | 3/4 | 1/2 | 8 | 22 X 22 X 1 | 1-1/4 |

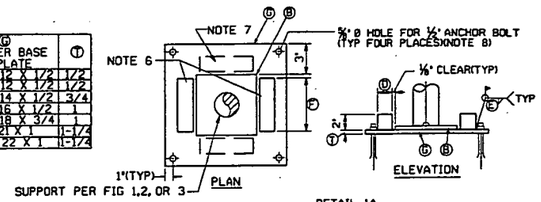


DETAIL 1A
FOR GUIDED SUPPORTS

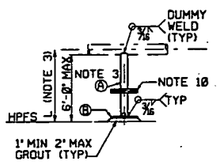


FIG 18

DETAIL 1 (REF P00207, P00223)
NTS

FIXED BASE SUPPORT

NOTES:

1. ALL SUPPORT MATERIAL SHALL BE CARBON STEEL.
2. SPOOL FABRICATOR SHALL FURNISH SUPPORT COMPLETE AS SHOWN AND BAND SUPPORT PARTS TO SPOOL FOR SHIPMENT. STUB Ⓐ SHALL HAVE BEVELED END.
3. DIMENSION L IS SHOWN ON PIPING DRAWING. FABRICATOR SHALL INCLUDE AN EXTRA 6 INCHES IN ITEM Ⓐ FOR FIELD FIT-UP AT INSTALLED LOCATION.
4. DO NOT USE FIGURE 3 FOR SIZE 18 INCHES AND LARGER.
5. PAINT PER SPECIFICATION.
6. INSTALL GUIDE BARS ON TWO SIDES ONLY FOR FIGURES WITH G DESIGNATION. GUIDES TO BE ORIENTED PER THE PIPING DRAWING.
7. INSTALL GUIDE BARS ON ALL SIDES FOR FIGURES WITH A DESIGNATION WHERE INDICATED ON THE PIPING DRAWING.
8. USE HILTI 1/2" X 3 1/2" MINIMUM EMBEDMENT ANCHOR BOLT OR APPROVED EQUAL FOR BASE PLATE.
9. ALL DIMENSIONS ARE IN INCHES, UNLESS NOTED OTHERWISE.
10. SLIDE PLATES WERE ADDED IN THE FIELD IN ORDER TO MAKE SUPPORT REMOVABLE.

3671

1. SEE "TABLE A" ON DRAWING 95X-5500-P-02009 FOR PUMP, LINE, INSTRUMENT, VALVE NUMBERS AND HIGH POINT OF FINISHED FLOOR.
2. USE A 1" SOCKOLET WITH A 1" BALL VALVE AND A 1" AIR AND VACUUM VALVE.
3. PROVIDE EACH WELL WITH A 3/4" POLYETHYLENE CHLORINE INJECTION TUBE STRAPPED TO THE PUMP DISCHARGE COLUMN WITH NON CORRODING FASTENERS AT 10' INTERVALS. TERMINATE LOWER END NEAR PUMP INLET SCREEN AND EXTEND UPPER END THROUGH THE PUMP SURFACE PLATE FOR EW-25, 26 & 27.
4. TRIM CASING TO HEIGHT SHOWN AND INSTALL NEW CLASS 150 SS FLAT FACE FLANGE FOR EW-25, 26 & 27.
5. WELLS EW-25, 26, 27 & 28 THE FIT IS ALSO THE PRIMARY FLOW ELEMENT (FE).

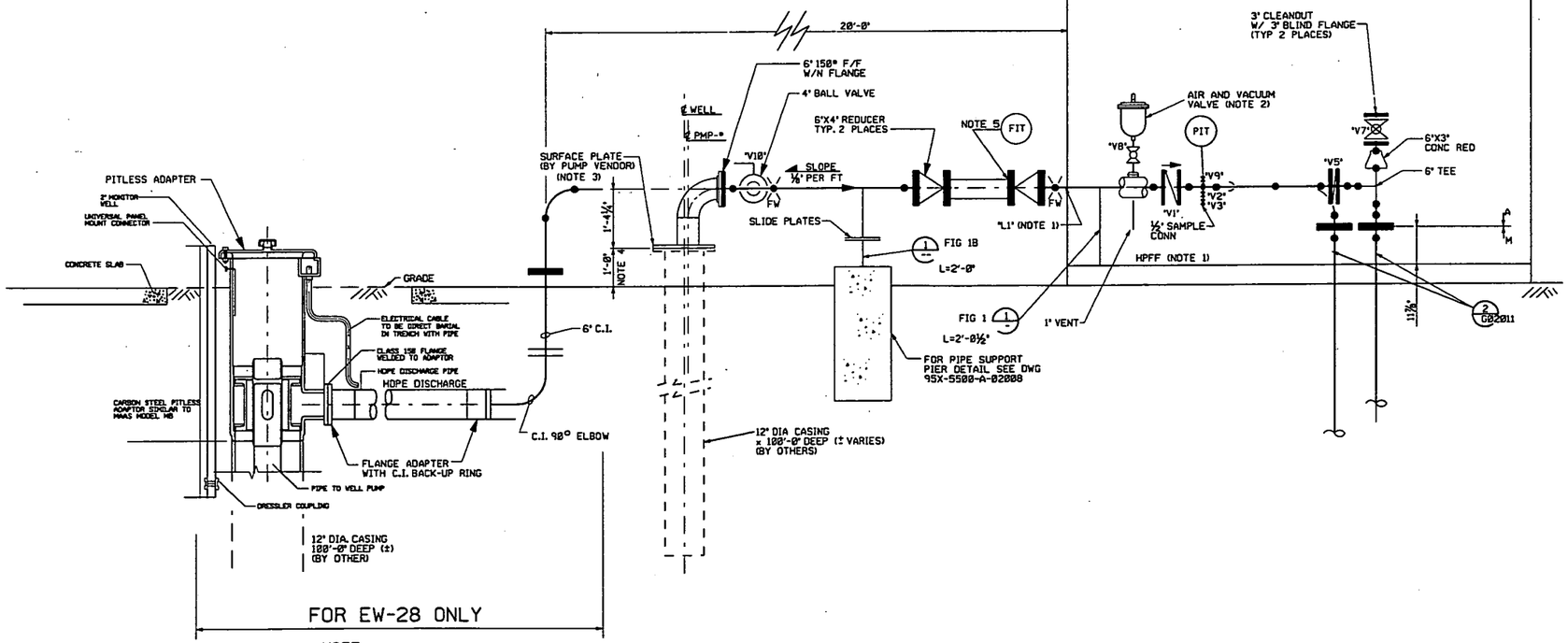


NOTE:
PITLESS ADAPTER TO BE USED FOR EW-28 DUE TO IT BEING REMOTE FROM WELL HOUSE

SECTION A (P02009)
3/4"=1'-0"

| REF DWG NO. | DRAWING TITLE |
|---|---|
| 95X-5500-X-02002 | DRAWING INDEX |
| 95X-5500-A-02007 | WELL HOUSE PIPING PLAN |
| 95X-5500-A-02008 | SECTIONS AND DETAILS |
| 95X-5500-G-02011 | WELL DETAILS |
| 95X-5500-G-02012 | WELL DETAILS |

PRELIMINARY

000009

| NO. | REVISIONS | DATE | DWN. BY | APPD. |
|---|---|---|---|---|
| A | ISSUED FOR ENGINEERING REVIEW | H-D | JML | |

| NO. | REVISIONS | DATE | DWN. BY | APPD. | REF. DWG. NO. |
|---|---|---|---|---|---|
| | | | | | 95X-5500-X-02002 |

NOTE:
FLUOR FERNALD CADD DRAWING. DO NOT REVISE MANUALLY.

CONFIGURATION MANAGEMENT DRAWING — YES / NO
EXISTING STRUCTURES OR COMPONENTS AFFECTED BY THIS DRAWING INCLUDED IN CONFIGURATION MANAGEMENT CONTROL. SEE NOTES.
COGNIZANT ENGINEER — DATE

| APPROVALS | | | |
|---|---|---|---|
| CIVIL & STR. | | SAFETY ENG. | |
| ELECTRICAL | | MAINTENANCE | |
| ENGINEER | | FIRE PROTECT. | |
| INSTRUMENT | | WASTE MANAGE. | |
| MECHANICAL | | SECURITY | |
| | | PROJECTS | |
| CHECKED | | | |
| APPROVED | | | |

Fernald Environmental Management Project
FLUOR FERNALD, INC.
U.S. DEPARTMENT OF ENERGY

ARWWP — SITE
WASTE STORAGE AREA EXTRACTION SYSTEM
PHASE I, AND SFES SUPPLEMENTAL WELL PIPING/PLANT DESIGN AND DETAILS
WELL HOUSE PIPING SECTION

RES 426
DATE APRIL 5, 2001
DRAWN MIKE LOCKE
95X-5500-P-02010 A

FILE NAME: res426/95xp2010.dgn

FFSJOH 3/22/00

95xp2010.m schw0542 Monday April 09 2001 at 08:45:35 AM EDT

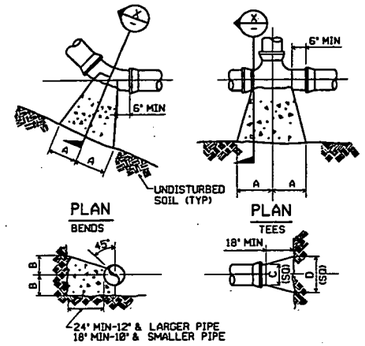


| TYPE | SIZE | 1/4 BENDS A | 1/4 BENDS B | 1/8 BENDS A | 1/8 BENDS B | 1/16 BENDS A | 1/16 BENDS B | TEES A | TEES B | PLUGS C | PLUGS D |
|---|---|---|---|---|---|---|---|---|---|---|---|
| 2000 PSF SOIL | 6" | 16" | 10" | 9" | 10" | 6" | 8" | 10" | 12" | 10" | 21" |
| | 8" | 22" | 13" | 12" | 13" | 8" | 10" | 13" | 16" | 12" | 29" |
| | 10" | 26" | 17" | 14" | 17" | 10" | 13" | 16" | 20" | 14" | 36" |
| | 12" | 29" | 21" | 16" | 21" | 11" | 16" | 18" | 24" | 16" | 41" |
| | 16" | 38" | 27" | - | - | - | - | 24" | 30" | - | - |
| | 20" | 42" | 30" | - | - | - | - | 27" | 30" | - | - |
| | 24" | 48" | 38" | - | - | - | - | 36" | 30" | - | - |

NOTE: BASED ON 150 PSI STATIC PRESSURE PLUS A.W.W.A. WATER HAMMER. ALL BEARING SURFACES TO BE CARRIED TO UNDISTURBED GROUND.

## THRUST BLOCK DETAILS (8)
NTS

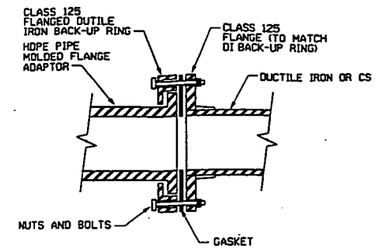


## HDPE FLANGE ADAPTER DETAIL (5)
NTS

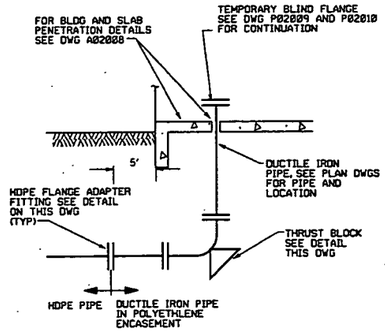


NOTE: OTHER THRUST BLOCKS NEARBY CAN BE COMBINED TOGETHER, AT CONTRACTOR'S OPTION. THIS DETAIL IS TYPICAL FOR ALL WELL HOUSES.

## TYPICAL WELL/VALVE HOUSE TIE-IN DETAIL (2)
NTS

GENERAL NOTES

1. UNLESS OTHERWISE NOTED ALL MATERIALS SHALL CONFORM TO THE STATE OF OHIO DEPARTMENT OF TRANSPORTATION (ODOT) CONSTRUCTION AND MATERIAL SPECIFICATIONS DATED JANUARY 1, 1997.
2. UNLESS OTHERWISE NOTED ALL CONCRETE SHALL BE 3000 PSI AS STATED IN SPECIFICATION SECTION 03301.

3671

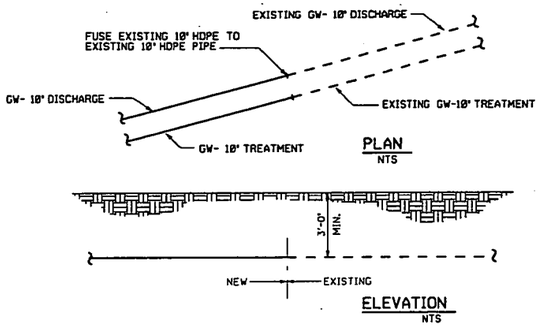


## TIE-IN POINT DETAIL (2)
NTS C02004

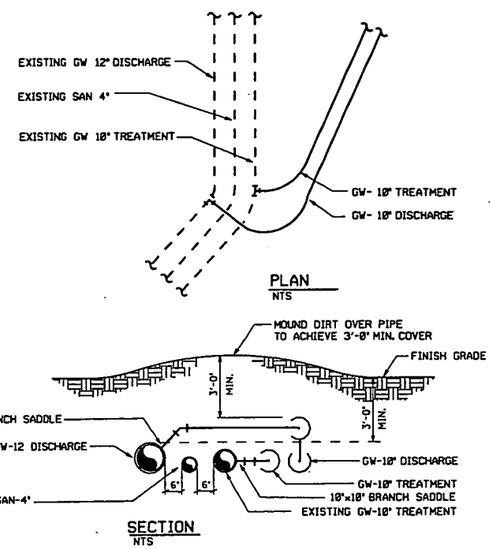


## TIE-IN POINT DETAIL (1)
NTS C02004

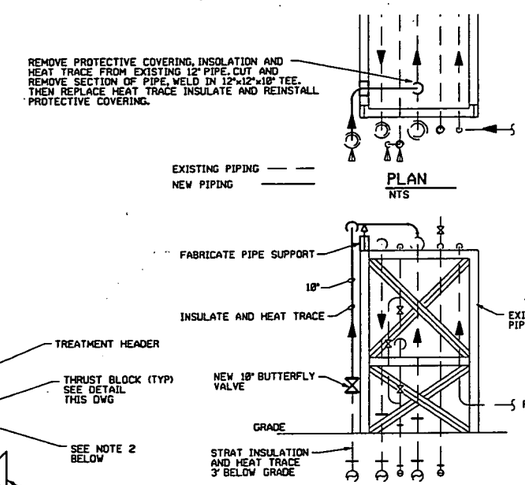


## 10" TIE-IN AT PIPE RACK-WEST SIDE AWWT TANK FARM (9)
NTS

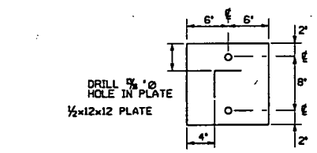


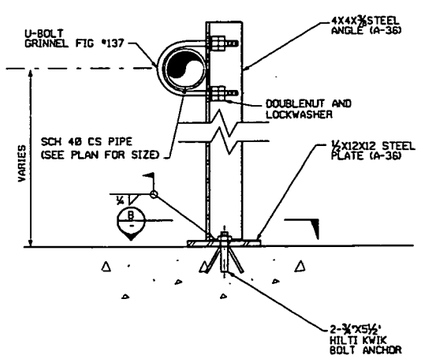


## PIPE SUPPORT (6)
NTS

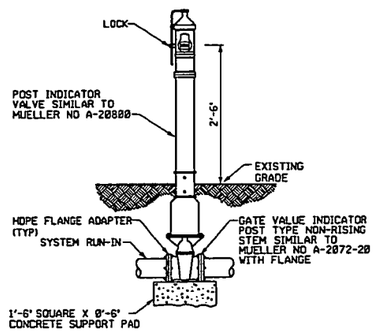


## POST INDICATOR VALVE DETAIL (3)
LINES SIZES 12" AND LESS
NTS

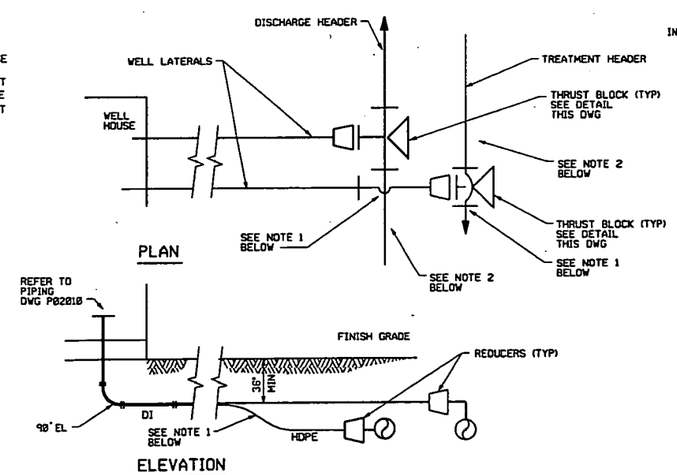


NOTE:

1. BEND TREATMENT LATERAL AND HEADER TO PROVIDE 8' CLEARANCE. MINIMUM BEND RADIUS IS 40 DIAMETERS OR AS SPECIFIED BY PIPE MANUFACTURER.
2. THE DISCHARGE HEADER IS NOT ALWAYS CLOSER TO WELL HOUSE. REFER TO SITE/GRADING/UTILITY PLAN FOR EACH TIE-IN.

## TYPICAL WELL/VALVE HOUSE TIE-IN DETAIL (1)
NTS

ABBREVIATIONS

| | |
|---|---|
| HDPE | HIGH DENSITY POLYETHYLENE |
| DI | DUCTILE IRON |
| PIV | POST INDICATOR VALVE |
| CO | CLEANOUT |
| CS | CAST STEEL |

PRELIMINARY

000010

| NO. | REVISIONS | DATE | DWN. BY | APPD. | NO. | REVISIONS | DATE | DWN. BY | APPD. | REF. DWG. NO. |
|---|---|---|---|---|---|---|---|---|---|---|
| | | | | | A | ISSUED FOR ENGINEERING REVIEW | 1-30 | RSO | | 95X-5500-X-02002 |

NOTE: FLUOR FERNALD CADD DRAWING. DO NOT REVISE MANUALLY.

CONFIGURATION MANAGEMENT DRAWING — SYSTEMS, STRUCTURES OR COMPONENTS DEPICTED ON THIS DRAWING ARE UNDER CONFIGURATION MANAGEMENT CONTROL. SEE NOTES. — COGNIZANT ENGINEER — DATE

APPROVALS: CIVIL & STR. — ELECTRICAL — ENGINEER — INSTRUMENT — MECHANICAL — CHECKED — APPROVED — SAFETY ENG. — MAINTENANCE — FIRE PROTECT. — WASTE MANAGE — SECURITY — PROJECTS

Fernald Environmental Management Project
FLUOR FERNALD, INC.
U.S. DEPARTMENT OF ENERGY

ARWWP — SITE
WASTE STORAGE AREA EXTRACTION SYSTEM
PHASE I, AND SFES SUPPLEMENTAL WELL DETAILS
NOT TO SCALE

RES 429 — DATE FEB. 7, 2001 — DRAWN R. GRR — 95X-5500-G-02011 — A

FILE NAME: /res4211/95xg2011.dgn

95xg2011.m schw0542 Monday April 09 2001 at 08:53:10 AM EDT

1. UNLESS OTHERWISE NOTED ALL MATERIALS SHALL CONFORM TO THE STATE OF OHIO DEPARTMENT OF TRANSPORTATION (ODOT) CONSTRUCTION AND MATERIAL SPECIFICATIONS DATED JANUARY 1, 1997.
2. UNLESS OTHERWISE NOTED ALL CONCRETE SHALL BE 3000 PSI AS SPECIFIED IN THE SPECIFICATIONS.

**3671**

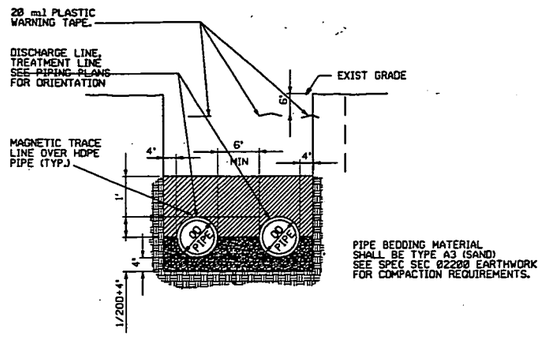


TYPICAL 2 PIPE BEDDING DETAIL (9)
NTS

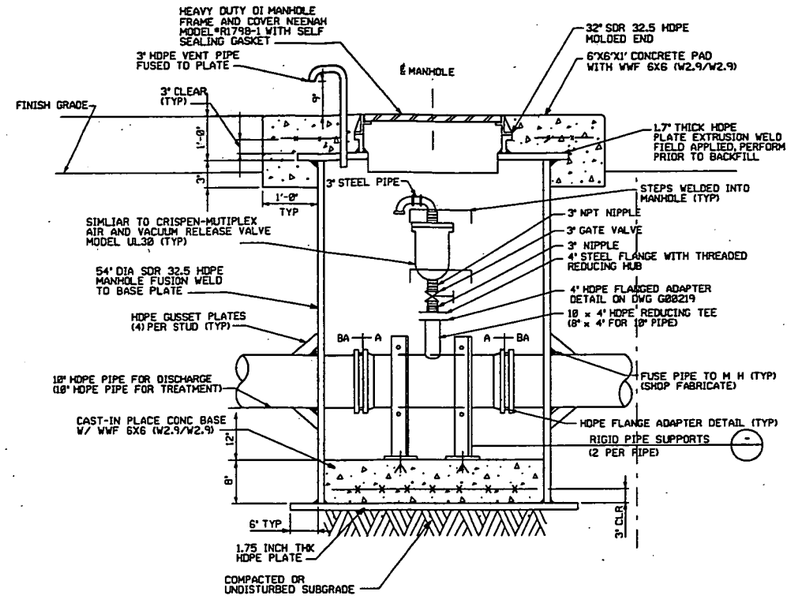


AIR-RELEASE MANHOLE (6)
NTS

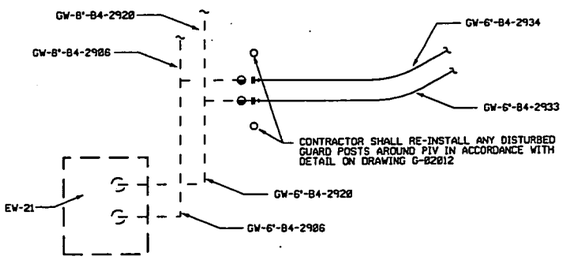


TIE-IN POINT DETAIL (3) G02005
NTS

NOTE: CONTRACTOR SHALL FIELD VERIFY LOCATION OF EXISTING BLIND FLANGES BEFORE CONSTRUCTION TIE-INS.

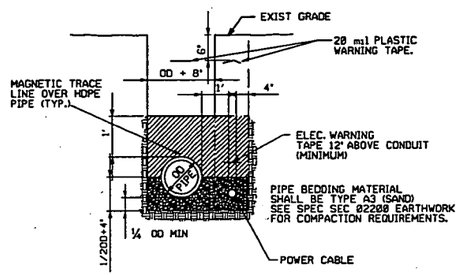


TYPICAL PIPE BEDDING DETAIL (8)
NTS

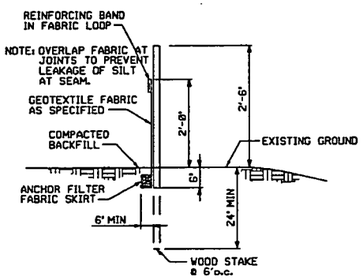


SILT FENCE (5)
NTS

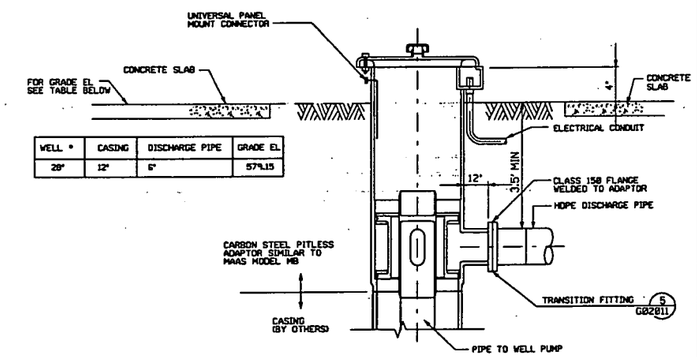


| WELL # | CASING | DISCHARGE PIPE | GRADE EL. |
|---|---|---|---|
| 28" | 12" | 6" | 579.15 |

TYPICAL PITLESS ADAPTOR (2) P02010

NOTE: PROVIDE WELL WITH A ½" POLYETHYLENE CHLORINE INJECTION TUBE STRAPPED TO THE PUMP DISCHARGE COLUMN WITH NON CORRODING FASTENERS AT 10' INTERVALS. TERMINATE LOWER END NEAR PUMP INLET SCREEN. CLAMP UPPER END OF TUBE TO PITLESS ADAPTOR UPPER CASING AND LEAVE SUFFICIENT LENGTH, COILED INSIDE UPPER CASING TO EXTEND 3' ABOVE GRADE.

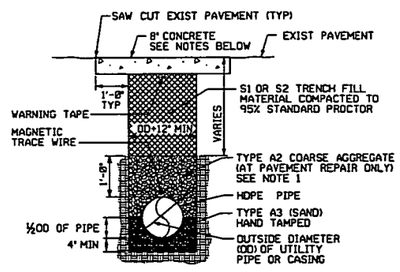


BEDDING UNDER PAVEMENT

NOTES:
1. USE ODOT ITEM 499, CLASS MS CONCRETE AT PAVEMENT CUTS.
2. FOR BEDDING NOT UNDER PAVEMENT, BACKFILL WITH S1 OR S2 MATERIAL.
3. FOR DETAILS OF CASING PIPE AT PAVEMENT REPAIRS SEE PROFILE SHEETS.

TYPICAL PAVEMENT REPAIR DETAIL (7)
NTS

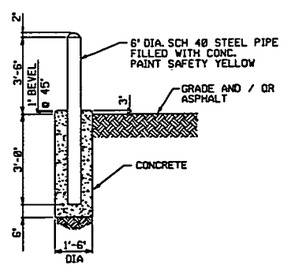


TYPICAL EXTERIOR GUARD POST DETAIL (4)
NTS

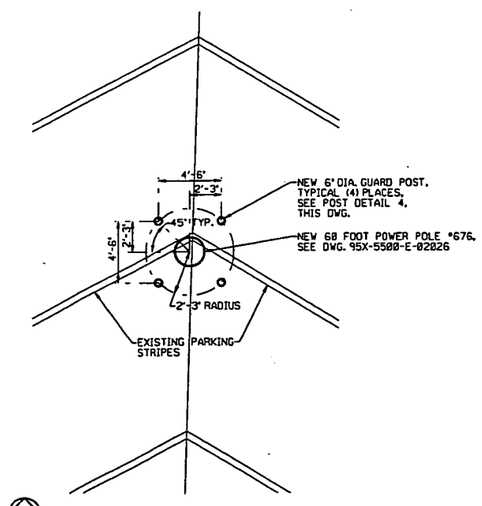


GUARD POST LOCATION DETAIL (10)
BLDG. 45 PARKING LOT
SCALE : ¼" = 1'-0"

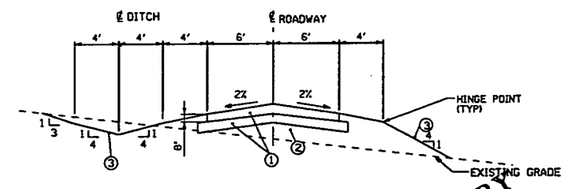


① ODOT ITEM 304 STABILIZED CRUSHED AGGREGATE (2-6" COURSE) ON FILTER FABRIC, ODOT ITEM 712, TYPE D.
② COMPACT SUBGRADE AND EMBANKMENT IN ACCORDANCE WITH THE SPECIFICATIONS.
③ TOPSOIL, SEED AND MULCH ALL NON-AGGREGATE SURFACES.

CRUSHED AGGREGATE PAVING DETAIL (1)
NTS

PRELIMINARY

**000011**

| NO. | REVISIONS | DATE | DWN. BY | APPD. | NO. | REVISIONS | DATE | DWN. BY | APPD. | REF. DWG. NO. |
|---|---|---|---|---|---|---|---|---|---|---|
| | | | | | A | ISSUED FOR ENGINEERING REVIEW | 11-0 | RSO | | 95X-5500-X-02002 |

NOTE: FLUOR FERNALD CADD DRAWING, DO NOT REVISE MANUALLY.

CONFIGURATION MANAGEMENT DRAWING — EXISTING STRUCTURES OR COMPONENTS SHOWN AS BUILT UNLESS NOTED OTHERWISE. CONFIGURATION MANAGEMENT COMMENTS ARE NOTED.

COGNIZANT ENGINEER DATE

| APPROVALS | | | |
|---|---|---|---|
| CIVIL & STR. | | SAFETY ENG. | |
| ELECTRICAL | | MAINTENANCE | |
| ENGINEER | | FIRE PROTECT. | |
| INSTRUMENT | | WASTE MANAGE | |
| MECHANICAL | | SECURITY | |
| | | PROJECTS | |
| CHECKED | | | |
| APPROVED | | | |

Fernald Environmental Management Project
FLUOR FERNALD, INC.
U.S. DEPARTMENT OF ENERGY

ARWWP SITE
WASTE STORAGE AREA EXTRACTION SYSTEM
PHASE I, AND SFES SUPPLEMENTAL WELL
DETAILS
NOT TO SCALE

RES 428
DATE APRIL 6, 2001
DRAWN R. ORR
95X-5500-G-02012 A

FILE NAME: /res428/95xg2012.dgn

FFS.DGN 3/22/00

95xg2012.m derr1907 Wednesday April 11 2001 at 02:48:44 PM EDT

# ELECTRICAL PLAN SYMBOLS

3671

## SWITCH AND RECEPTACLE SYMBOLS

- $ CKT — SWITCH, SINGLE POLE WALL MOUNTED FLUSH
- 3 $ CKT — SWITCH, THREE-WAY
- 4 $ CKT — SWITCH, FOUR-WAY
- CKT — INDICATES DISTRIBUTION PANEL AND CIRCUIT BREAKER NUMBER FROM WHICH POWER IS SUPPLIED (TYPICAL)
- CKT — SINGLE RECEPTACLE
- WP CKT — SINGLE RECEPTACLE WP = WEATHER PROOF
- G CKT — DUPLEX RECEPTACLE G = GROUND FAULT TYPE (GFCI)
- WELDING OR POWER RECEPTACLE
- DS00 / 100A — DISCONNECT SWITCH WITH AMP RATING
- T00 / 50KVA — TRANSFORMER WITH KVA RATING
- T — THERMOSTAT

## LIGHTING SYMBOLS

- CKT — FLUORESCENT FIXTURE
- 70W CKT — WALL MOUNTED FLUORESCENT LIGHT FIXTURE, WITH INDIVIDUAL PHOTOCELL CONTROL, SUITABLE FOR OUTDOOR AND WET LOCATIONS, LAMP WATTAGE AS SHOWN
- CKT — TWO-LAMP EMERGENCY EGRESS LIGHT FIXTURE WITH RECHARGEABLE BATTERIES
- EXIT CKT — EXIT LIGHT
- 250W HPS CKT — CEILING OR PENDANT MOUNTED HIGH PRESSURE SODIUM LIGHT, WITH WIDE BEAM SPREAD, LOWBAY TYPE, FULLY ENCLOSED, LAMP WATTAGE AS SHOWN
- P 70W HPS CKT — POLE MOUNTED, WITH PHOTO CONTROL HIGH PRESSURE SODIUM FLOOD LIGHT, WITH LAMP WATTAGE AS SHOWN
- 150W INC CKT — STANCHION MOUNTED INCANDESCENT LIGHT WITH LAMP WATTAGE AS SHOWN
- 150W INC CKT — WALL MOUNTED INCANDESCENT LIGHT WITH LAMP WATTAGE SHOWN

## COMMUNICATIONS SYMBOLS

- PA — PUBLIC ADDRESS SPEAKER WITH SINGLE HORN.
- PA — PUBLIC ADDRESS SPEAKER WITH DUAL HORN.
- PA — PUBLIC ADDRESS SPEAKER FLUSH CEILING MOUNTED
- TEL — TELEPHONE OUTLET
- B — BELL
- H — HORN
- EH — EVACUATION SYSTEM HORN/SPEAKER

## MISCELLANEOUS SYMBOLS

- M — HORIZONTAL MOTOR
- M — VERTICAL MOTOR
- POWER POLE
- POLE DOWN-GUY AND ANCHOR
- HT — HEAT TRACING POWER CONNECTION
- D — OVERHEAD DOOR MOTOR CONNECTION

| REF DWG NO. | DRAWING TITLE |
|---|---|
| 95X-5500-X-02002 | DRAWING INDEX |
| 95X-5500-E-02021 | 13.2 KV DISTRIBUTION & COMMUNICATION PLAN |
| 95X-5500-E-02038 | 480/120V POWER, INSTRUMENT, AND LIGHTING PLAN - WELL HOUSE |

## GROUNDING SYMBOLS

- G — GROUNDING CABLE EXPOSED
- G — GROUNDING CABLE EMBEDDED OR DIRECT BURIED
- G — GROUNDING CONNECTION
- GROUNDING ROD CONNECTION TO GROUNDING CABLE
- GROUNDING ROD TEST WELL, BOLTED CONNECTIONS TO GROUNDING CABLE
- G — GROUNDING CABLE WITH PARALLEL TAP TO TO STUB-UP WITH PIGTAIL

## CABLE TRAY SYMBOLS

- COVER
- CABLE TRAY - END VIEW
- CABLE TRAY - SIDE VIEW
- CABLE TRAY - VERTICAL CURVE (TURNING DOWN)
- CABLE TRAY - VERTICAL CURVE (TURNING UP)
- P1 / 12" — TRAY SECTION DESIGNATION I = INSTRUMENTATION (ANALOG) P = POWER C = CONTROL (DIGITAL); TRAY WIDTH

## CONDUIT, LINE AND DUCTBANK SYMBOLS

- CONDUIT, EXPOSED
- CONDUIT, ROUTED BELOW PLAN ELEVATION, EMBEDDED OR DIRECT BURIED
- CONDUIT TURNING TOWARDS
- CONDUIT TURNING AWAY
- CONDUIT AND CABLE HOMERUN TO LOCATION INDICATED
- DISCONNECT AND REMOVE CONDUIT (D&R)
- FLEXIBLE CONDUIT AND CONNECTOR AT END OF RIGID CONDUIT RUN
- SEALED CONDUIT CONNECTOR FOR FIRE PROTECTION, VAPOR BARRIER
- CONDUIT GROUPINGS ALONG FLOOR OR WALL
- 3-1/C#10 ,3/4"C — CONDUIT AND CABLE RUNS NOT LISTED IN CONDUIT AND CABLE SCHEDULE
- WEATHERHEAD AT END OF RIGID CONDUIT RUN
- 2/1PC — CONDUIT NUMBER AS IDENTIFIED ON CONDUIT SCHEDULE; CONDUIT IDENTIFICATION BUBBLE; CONDUIT SIZE AS IDENTIFIED ON CONDUIT SCHEDULE

## PUSHBUTTON AND PANEL SYMBOLS

- PUSH BUTTON OR SELECTOR SWITCH , REMOTE MOUNTED, SINGLE
- PUSH BUTTON OR SELECTOR SWITCH , REMOTE MOUNTED, TWO OR MORE
- LP(X) — LIGHTING PANEL, SURFACE MOUNTED AND I.D. NUMBER
- PP00 — POWER PANEL, FLUSH MOUNTED AND I.D. NUMBER
- TEL00 — TELEPHONE PANEL
- ANNUN — ANNUNCIATOR

## MONITOR SYMBOLS

- CM — CRITICALITY MONITOR WITH EMERGENCY POWER CIRCUIT
- RM — RADIATION MONITOR
- AM — AIR MONITOR STATION
- CO — CARBON MONOXIDE MONITOR PANEL
- INSTRUMENT
- XXXX — XXXX - DEVICE NUMBER

PRELIMINARY

000012

| NO. | REVISIONS | DATE | DWN. BY | APPD. | NO. | REVISIONS | DATE | DWN. BY | APPD. | REF. DWG. NO. |
|---|---|---|---|---|---|---|---|---|---|---|
| | | | | | A | ISSUED FOR ENGINEERING REVIEW | 4-6-0 | MWD | | 95X-5500-X-02002 |

NOTE: FLUOR FERNALD CADD DRAWING. DO NOT REVISE MANUALLY.

CONFIGURATION MANAGEMENT DRAWING — YES / NO. SYSTEMS, STRUCTURES, OR COMPONENTS DEPICTED ON THIS DRAWING ARE UNDER CONFIGURATION MANAGEMENT CONTROL. SEE NOTES.

COGNIZANT ENGINEER — DATE

APPROVALS: CIVIL & STR. / ELECTRICAL / ENGINEER / INSTRUMENT / MECHANICAL / CHECKED / APPROVED / SAFETY ENG. / MAINTENANCE / FIRE PROTECT. / WASTE MANAGE / SECURITY / PROJECTS

Fernald Environmental Management Project

FLUOR FERNALD, INC.

U.S. DEPARTMENT OF ENERGY

ARWWP — SITE

WASTE STORAGE AREA EXTRACTION SYSTEM
PHASE I, AND SFES SUPPLEMENTAL WELL
ELECTRICAL SYMBOLS AND LEGEND
NOT TO SCALE

RES 428 — DATE APRIL 6, 2001 — DRAWN M.W.DERROUGH — 95X-5500-E-02016 — A

FILE NAME: res428/95xe2016.dgn

FFSJDN 3/22/00

95xe2016.m schw0542 Monday April 09 2001 at 09:18:59 AM EDT

3671

## SINGLE LINE DIAGRAM SYMBOLS

| | | |
|---|---|---|
| ARRESTER | YY-XXXX | 'YY' INDICATES SPECIAL IDENTIFIER<br>'XXXX' INDICATES ID NO. |
| CIRCUIT BREAKER, LOW VOLTAGE | FFFF<br>TTTT | 'FFFF' INDICATES FRAME RATING AMPS (SHOWN ON SWITCHGEAR ONLY)<br>'TTTT' INDICATES TRIP RATING AMPS |
| CIRCUIT BREAKER, MEDIUM VOLTAGE | FFFF<br>TTTT | 'FFFF' INDICATES FRAME RATING AMPS<br>'TTTT' INDICATES TRIP RATING AMPS |
| COMBINATION STARTER, NON-REVERSING | TTTT<br>ZZZZ | 'TTTT' INDICATES TRIP RATING AMPS<br>'ZZZZ' INDICATES NEMA SIZE<br>EQUIPMENT OUTLINE (TYP) |
| FUSED SWITCH | FFFF | 'FFFF' INDICATES FUSE SIZE |
| CURRENT TRANSFORMER | YY<br>ZZZZ | 'YY' INDICATES NO. OF CT(S)<br>'ZZZZ' INDICATES CT RATIO(S) |
| DISCONNECT SWITCH | FFFF | 'FFFF' INDICATES FRAME RATING AMPS |
| DRAW-OUT DEVICE/ RECEPTACLE | | |
| FUSED DISCONNECT SWITCH | FFFF<br>TTTT | 'FFFF' INDICATES FRAME RATING AMPS<br>'TTTT' INDICATES TRIP RATING AMPS |
| FUSE | XXXX YY TTTT | 'XXXX' INDICATES ID NO.<br>'YY' INDICATES SPECIAL IDENTIFIER<br>'TTTT' INDICATES TRIP RATING AMPS |
| GENERATOR | | |
| INDICATING METER | XXXX YYY | 'XXXX' INDICATES ID NO.<br>'YYY' INDICATES SPECIAL INDICATOR |
| LOAD, NON-MOTOR | ZZZ ZZZ | 'ZZZ' INDICATES EQUIPMENT SIZE IN KVA OR KW |
| MOTOR | ZZZ HP | 'ZZZ' INDICATES HORSEPOWER SIZE |
| MOTOR OVERLOAD RELAY | | |
| MOTOR STARTER CONTACT | ZZ | 'ZZ' INDICATES NEMA SIZE |
| PANEL MOUNTED SWITCH | XXXX YY | 'YY' INDICATES SPECIAL IDENTIFIER<br>'XXXX' INDICATES ID NO. |
| POTENTIAL TRANSFORMER | ZZZZ | 'ZZZZ' INDICATES VOLTAGE RATIO (TYP. 14.4K/120) |
| SYMBOL 3 PHASE DELTA | Δ | |
| SYMBOL, 3 PHASE WYE GROUNDED | Y | |
| TRANSFER SWITCH | YY-XXXX | 'YY' INDICATES SPECIAL IDENTIFIER<br>'XXXX' INDICATES ID NO. |
| WELDING/POWER RECEPTACLE | | |
| TRANSFORMER | XXXX ZZZZ | 'XXXX' INDICATES ID NO.<br>'ZZZZ' INDICATES TRANSFORMER RATINGS - KVA, 1 OR 3 PHASE, VOLTAGE RATIO, IMPEDANCE |

## ELEMENTARY DIAGRAM SYMBOLS

| | | |
|---|---|---|
| CIRCUIT BREAKER | TTTT | 'TTTT' INDICATES TRIP RATING AMPS |
| CONTACT | YY-XXXX | NORMALLY OPEN, CLOSES WHEN COIL IS ENERGIZED, 'XXXX' INDICATES ID NO., 'YY' INDICATES SPECIAL IDENTIFIER |
| CONTACT | YY-XXXX | NORMALLY CLOSED, OPENS WHEN COIL IS ENERGIZED, 'XXXX' INDICATES ID NO., 'YY' INDICATES SPECIAL IDENTIFIER |
| CONTROL POWER XFMR | H1 480V H2<br>CPT<br>X1 120V X2 | |
| DISCONNECT SWITCH | FFFF | 'FFFF' INDICATES FRAME RATING AMPS |
| DISCONNECT SWITCH, 3 PHASE | DSWXXXX<br>FFFF | 'XXXX' INDICATES ID NO.,<br>'FFFF' INDICATES FRAME RATING AMPS |
| EQUIPMENT LOAD, 1 PHASE | H1 H2 ZZZZ ZZZZ | 'ZZZZ' INDICATES EQUIPMENT SIZE IN 'KVA' OR 'KW' |
| EQUIPMENT LOAD, 1 PHASE | H1 H2 ZZZZ ZZZZ | 'ZZZZ' INDICATES EQUIPMENT SIZE IN 'KVA' OR 'KW' |
| EQUIPMENT LOAD, 3 PHASE | H1 H2 H3 ZZZZ ZZZZ | 'ZZZZ' INDICATES EQUIPMENT SIZE IN 'KVA' OR 'KW' |
| FUSE | XXXX<br>TTTT<br>YY | 'XXXX' INDICATES ID NO.,<br>'TTTT' INDICATES TRIP RATING AMPS<br>'Y' INDICATES SPECIAL IDENTIFIER |
| GROUND | | |
| MOTOR, 1 PHASE | T1 T2 ZZZ HP | 'ZZZ' INDICATES HP SIZE |
| MOTOR, 1 PHASE | T1 T2 ZZZ HP | 'ZZZ' INDICATES HP SIZE |
| MOTOR, 3 PHASE | T1 T2 T3 ZZZ HP | 'ZZZ' INDICATES HP SIZE |
| OVERLOAD ELEMENT | OL | |
| PILOT LIGHT | XXXX YY | 'XXXX' INDICATES ID NO.,<br>'YY' INDICATES SPECIAL IDENTIFIER |
| PUSH-TO-TEST LIGHT | XXXX YY | 'XXXX' INDICATES ID NO.,<br>'YY' INDICATES SPECIAL IDENTIFIER |
| RELAY | XXXX YY | 'XXXX' INDICATES ID NO.,<br>'YY' INDICATES SPECIAL IDENTIFIER |
| RELAY, TIME DELAY | TDR-XXXX TDAE TTTT | TIME DELAY AFTER ENERGIZED,<br>'XXXX' INDICATES ID NO.<br>'TTTT' INDICATES TIMING SET POINT |
| RELAY, TIME DELAY | TDR-XXXX TDAD TTTT | TIME DELAY AFTER DE-ENERGIZED,<br>'XXXX' INDICATES ID NO.<br>'TTTT' INDICATES TIMING SET POINT |
| RESISTOR | XXXX ZZZZ | 'XXXX' INDICATES ID NO.<br>'ZZZZ' INDICATES SIZE IN OHMS |
| SOLENOID VALVE COIL | XXXX | 'XXXX' INDICATES ID NO. |
| THERMAL OVERLOAD CONTACT | OL | NORMALLY CLOSED, OPENS WHEN OVERLOAD RELAY(S) TRIP |

| | |
|---|---|
| WIRING BY SUBCONTRACTOR | ———————— |
| WIRING BY CONSTRUCTION | - - - - - - - - - - - - |

## SWITCHES

| | |
|---|---|
| FLOW SWITCH | NORMALLY CLOSED, OPENS ABOVE SET FLOW |
| FLOW SWITCH | NORMALLY OPEN, CLOSES ABOVE SET FLOW |
| FOOT SWITCH | NORMALLY OPEN, CLOSES WHEN ACTUATED |
| FOOT SWITCH | NORMALLY CLOSED, OPENS WHEN ACTUATED |
| LEVEL SWITCH | NORMALLY CLOSED, OPENS ABOVE SET LEVEL |
| LEVEL SWITCH | NORMALLY OPEN, CLOSES ABOVE SET LEVEL |
| LIMIT SWITCH | NORMALLY CLOSED, OPENS BY MECHANICAL OPERATION |
| LIMIT SWITCH | NORMALLY OPEN, CLOSES BY MECHANICAL OPERATION |
| VACUUM SWITCH | NORMALLY OPEN, CLOSES BELOW SET PRESSURE |
| VACUUM SWITCH | NORMALLY CLOSED, OPENS BELOW SET PRESSURE |
| PRESSURE SWITCH | NORMALLY CLOSED, OPENS ABOVE SET PRESSURE |
| PRESSURE SWITCH | NORMALLY OPEN, CLOSES ABOVE SET PRESSURE |
| PUSHBUTTON | XX MOMENTARY OR MAINTAIN CONTACT (XX = MC), NORMALLY OPEN CONTACT |
| PUSHBUTTON | XX MOMENTARY OR MAINTAIN CONTACT (XX = MC), NORMALLY CLOSED CONTACT |
| PUSHBUTTON, MUSHROOM HEAD | XX MOMENTARY OR MAINTAIN CONTACT (XX = MC), NORMALLY OPEN CONTACT |
| PUSHBUTTON, MUSHROOM HEAD | XX MOMENTARY OR MAINTAIN CONTACT (XX = MC), NORMALLY CLOSED CONTACT |
| SELECTOR SWITCH (GENERAL) | XXXX YY ZZ (X) (OX)<br>'XXXX' INDICATES ID NO.<br>'YY' INDICATES NAME OF CURRENT SWITCH POSITION, 'ZZ' INDICATES NAME OF OTHER SWITCH POSITION(S)<br>'X' INDICATES CLOSED CIRCUIT POSITION<br>'O' INDICATES OPEN CIRCUIT POSITION<br>(CONTACTS DIAGRAMMATICALLY SHOWN CLOSED) |
| TEMPERATURE SWITCH | NORMALLY CLOSED, OPENS ABOVE SET TEMPERATURE |
| TEMPERATURE SWITCH | NORMALLY OPEN, CLOSES ABOVE SET TEMPERATURE |
| TIMER SWITCH | NORMALLY CLOSED, OPENS ON TIME DELAY AFTER COIL IS ENERGIZED |
| TIMER SWITCH | NORMALLY OPEN, CLOSES ON TIME DELAY AFTER COIL IS ENERGIZED |
| TIMER SWITCH | NORMALLY CLOSED, CLOSES ON TIME DELAY AFTER COIL IS DE-ENERGIZED |
| TIMER SWITCH | NORMALLY OPEN, OPENS ON TIME DELAY AFTER COIL IS DE-ENERGIZED |
| TORQUE SWITCH | NORMALLY OPEN, CLOSES BELOW SET POINT |
| TORQUE SWITCH | NORMALLY CLOSED, OPENS ABOVE SET POINT |

## SPECIAL IDENTIFIERS

| | |
|---|---|
| A | AMBER LIGHT OR AMMETER |
| AS | AMMETER SWITCH |
| ATS | AUTOMATIC TRANSFER SWITCH |
| C | CLEAR LIGHT |
| CB | CIRCUIT BREAKER |
| CL | CURRENT LIMITING FUSE |
| CR | CONTROL RELAY |
| CS | CONTROL SWITCH |
| E | HIGH SPEED, MEDIUM VOLTAGE FUSE |
| G | GREEN LIGHT |
| LA | LIGHTNING ARRESTER |
| LR | LATCHING RELAY |
| M | MOTOR RELAY |
| MTS | MANUAL TRANSFER SWITCH |
| PF | POWER FACTOR METER |
| R | RED LIGHT |
| SA | SURGE ARRESTER |
| SP | SPARE |
| T | TIME DELAY FUSE |
| V | VOLTMETER |
| VS | VOLTMETER SWITCH |
| W | WATTMETER |
| WH | WATTHOUR METER |
| WHD | WATTHOUR DEMAND METER |

| REF DWG NO. | DRAWING TITLE |
|---|---|
| 95X-5500-X-02002 | DRAWING INDEX |
| | |
| 96X-5900-E-00358 | SINGLE LINE DIAGRAM - 13.2 KV FEEDERS |
| | |
| 95X-5500-E-02030 | SINGLE LINE DIAGRAM - 480V FEEDERS |
| 95X-5500-E-02039 | ELEMENTARY AND INTERCONNECTION DIAGRAM |

PRELIMINARY

000013

| NO. | REVISIONS | DATE | DWN. BY | APPD. | NO. | REVISIONS | DATE | DWN. BY | APPD. | REF. DWG. NO. |
|---|---|---|---|---|---|---|---|---|---|---|
| | | | | | A | ISSUED FOR ENGINEERING REVIEW | 11-01 | MWD | | 95X-5500-X-02002 |

NOTE: FLUOR FERNALD CADD DRAWING. DO NOT REVISE MANUALLY.

CONFIGURATION MANAGEMENT DRAWING — REF / REV — EXISTING STRUCTURES OR COMPONENTS AFFECTED BY THIS DRAWING ARE UNDER CONFIGURATION MANAGEMENT CONTROL. SEE NOTES.

COGNIZANT ENGINEER DATE

APPROVALS: CIVIL & STR., ELECTRICAL, ENGINEER, INSTRUMENT, MECHANICAL, CHECKED, APPROVED; SAFETY ENG., MAINTENANCE, FIRE PROTECT., WASTE MANAGE, SECURITY, PROJECTS

Fernald Environmental Management Project

FLUOR FERNALD, INC.

U.S. DEPARTMENT OF ENERGY

ARWWP — SITE

WASTE STORAGE AREA EXTRACTION SYSTEM
PHASE I, AND SFES SUPPLEMENTAL WELL
ELECTRICAL SYMBOLS AND LEGEND
NOT TO SCALE

RES 421 — DATE APRIL 5, 2001 — DRAWN M.P. DERROUGH — 95X-5500-E-02017 — A

FILE NAME: res421l/95xe2017.dgn

95xe2017.m schw0542 Monday April 09 2001 at 12:22:35 PM EDT

3671

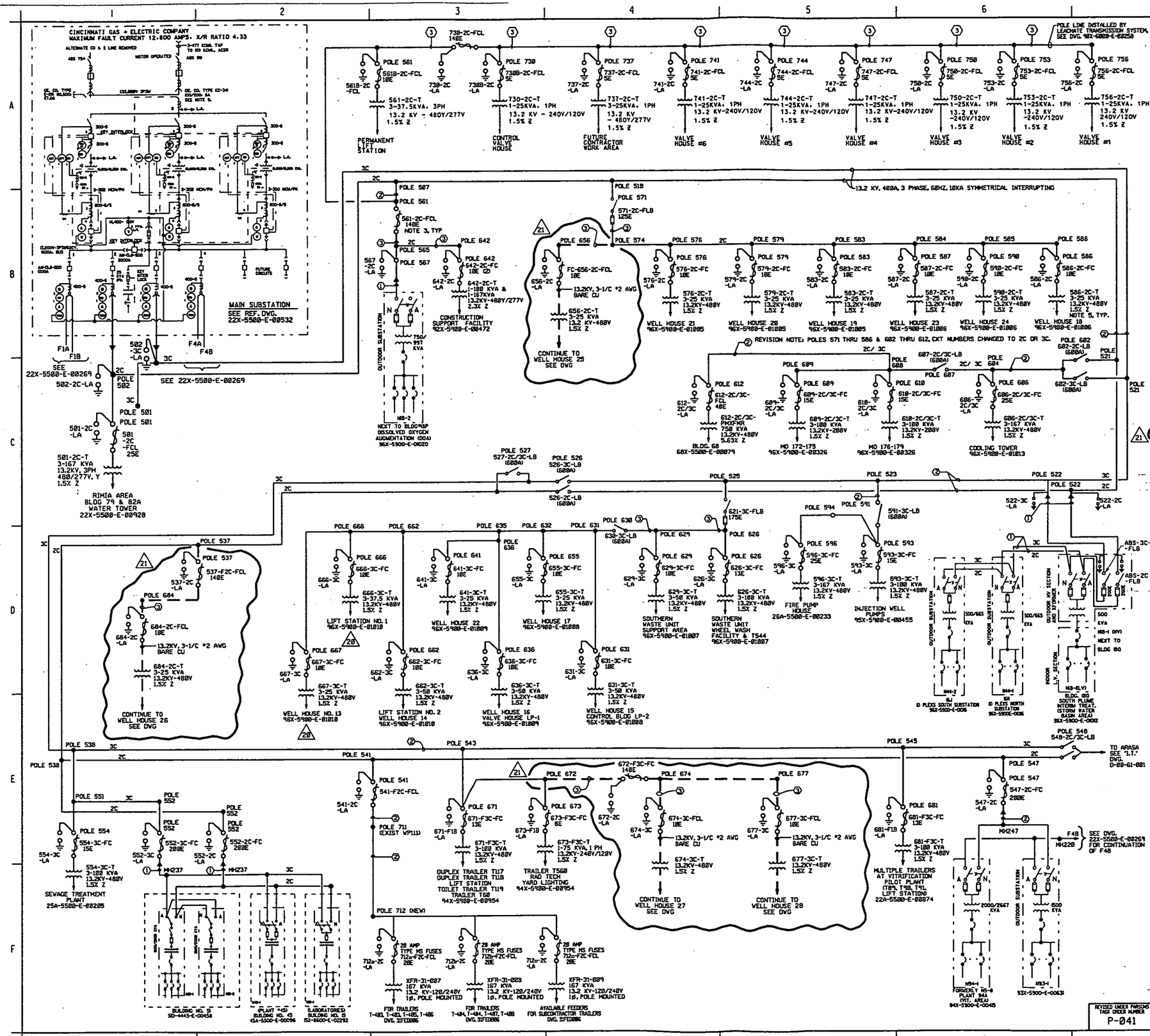


## NOTES

1. N - INDICATES NORMAL FEED
   A - INDICATES ALTERNATE OR EMERGENCY FEED
2. UNIT SUBSTATION, UNLESS OTHERWISE NOTED, RATING IS 1000KVA, 13200/480V, 3 PH, 60 HZ, CONNECTED Δ PRIMARY, & Y SECONDARY.
3. ALL SWITCHES AND CUTOUTS RATED 13.2KV, 10KA SYMMETRICAL INTERRUPTING UNLESS NOTED. CUTOUTS ARE RATED 200A EXCEPT FOR FUSES LESS THAN 100E, WHICH ARE 100A.
4. SEE 96X-5900-E-00352 & 96X-5900-E-00356 FOR POLE LOCATIONS, NUMBERS, AND EQUIPMENT.
5. POLE MOUNTED TRANSFORMER RATINGS ARE 20.5KV WYE/13.2KV DELTA, 3 PH, 60 HZ CONNECTED Δ PRIMARY, & Y SECONDARY.
6. SEE LEGEND ON 96X-5900-E-00352 FOR EQUIPMENT IDENTIFICATION.
7. SEE 22X-5500-E-269 FOR UNDERGROUND 13.2 KV DISTRIBUTION SYSTEM SINGLE LINE DIAGRAM & 22X-5500-E-00728 FOR CONDUIT ROUTING.
8. SEE 96X-5900-E-01002, MASTER SITE ELECTRICAL POWER DISTRIBUTION REFERENCE DRAWING DIAGRAM FOR 480 VOLT SINGLE LINE CONTINUATION REFERENCE DRAWINGS.
9. SET AT 100.5 AMPS.

## LEGEND:

| INSTRUMENT IDENTIFICATION | |
|---|---|
| 50/51 | OVERCURRENT RELAY, TYPE IAC |
| 51 | OVERCURRENT RELAY, TYPE IAC |
| 51G | OVERCURRENT RELAY, TYPE IAC |
| 51N | OVERCURRENT RELAY, TYPE IAC |
| 86T | AUXILIARY RELAY |
| 87T | DIFFERENTIAL CURRENT RELAY, TYPE HDD |
| 87TG | OVERCURRENT RELAY, TYPE IAC |
| A | AMMETER, TYPE AB-18 |
| V | VOLTMETER, TYPE AB-18 |
| W | POLYPHASE WATTMETER, TYPE AB-18 |
| WHM | WATTHOUR METER, TYPE DS-43 |

CABLE
1. 3- 350 KCMIL, #2 GND, 133% INSUL., 15KV, CU IN 4"C
2. 3-1/C 336 KCMIL, ASCR, "MERLIN"
3. 3-1/C #2, ACSR, "SPARROW"

15 KV CABLE TERMINATION

PROPOSED ELECTRICAL WORK

| REF DWG NO. | DRAWING TITLE |
|---|---|
| 22X-5500-E-00532 | ELECTRICAL DISTRIBUTION |
| 22X-5500-E-00728 | U.G. DISTRIBUTION SYSTEM 13.2 KV FEEDER SCHEM. |
| 22X-5500-E-00953 | OUTSIDE PRODUCTION AREA & HIGH VOLTAGE UTILITY POLE NUMBER DESIGNATION SITE PLAN |
| 96X-5900-E-00352 | ELECTRICAL 13.2 KV POLE SCHEDULE |
| 96X-5500-E-_____ | ELECTRICAL 13.2 KV POLE SCHEDULE, CONTINUED |
| 91X-5500-E-02089 | WASTE PIT AREA - 13.2 KV ONE LINE DIAGRAM |
| 96X-5900-E-00356 | MASTER PLAN - 13.2 KV POLES & AERIAL DIST. |
| 22X-5900-E-00269 | U/G DIST. SYSTEM - 13.2 KV. SINGLE LINE DIA. |
| 96X-5900-E-01002 | MASTER SITE ELEC POWER DISTRIBUTION REFERENCE DRAWING DIAGRAM |
| 98X-6000-E-00259 | OVERHEAD POWER TRANSMISSION SYSTEM DETAILS 1 |
| 31FED086 | "FOSTER WHEELER" 480 VOLT DISTRIBUTION SYSTEM SINGLE LINE DIAGRAM FOR TRAILER FEEDERS |

| REV. NO. | ISSUE OR REVISION PURPOSE - DESCRIPTION | TL | PW | REVD BY |
|---|---|---|---|---|
| | | INITIALS AND DATE | | |
| 21 | REVISED AS PER RES 4211 (ADDED NEW AERIAL 13.2 KV LINES AND ELECTRICAL ITEMS FOR EXTRACTION SYSTEM EQUIPMENT) | MWO 4/5/01 | | _/_/_ |
| 20 | REVISED AS PER RES 4203 (REMOVE CROSSHATCHING WITHIN REVISION 19 CLOUD, THIS AREA TO BE REMOVED, IS PROPOSAL WORK. | MWO 2/28/01 | | TBV/_ / / |
| 19 | REVISED AS PER RES 4203 (REMOVE ELECTRICAL AND WIRING FROM WELL HOUSE No. 13 BACK TO POLE #662 | MWO 02/15/01 | | TBV/DEP 2/28/01 |
| 18 | "AS BUILT" ADDED PER DCN 28482-021, INCORPORATED DCN: 28482-100 | JLC 01/23/01 | JW 01/24/01 | JLC 01/23/01 |
| 17 | REVISED AS PER DCN 28111-030 (ADDED FUSE CUTOUT 730 AND RELABELED EXISTING FUSE CUTOUT 730 TO 730B) | MWO 11/1/00 | | JBV/DEP 11/1/00 |
| 16 | REMOVED FUSE CUT-OUT AT POLE #712 AND LABELED FUSES AT TRAILERS | MWO 10/20/00 | | TBV/DEP 10/30/00 |
| 15 | ADDED POLES #514, WP111, WP712 & TRAILERS, REVISED PER DCN 40710-010 | MWO 10/19/00 | | TBV/DEP 10/19/00 |
| 14 | REVISED PER RES 4046 | LRO 6-19-00 | | JBV/DEP 06/21/00 |
| 13 | ADDED DRAWING REFERENCES, PER T.O. P-041 PHASE II & III | RP 01/26/00 | PF 01/26/00 | |
| 12 | ADDED WELLS 23 & 24; ADDED CONTINUATION REFERENCE TO 480V S/L, PER T.O. P-041 PASE I SLD | JLC 9-17-99 | PF 9-17-99 | LMV 9-17-99 |
| 11 | UPDATED FEEDER DESIGNATIONS & REVISED OSDF CONST SUP FEEDER PER DCN 20712-042 | RDP 7/15/99 | PF 7/15/99 | PF 7/15/99 |

# UNITED STATES DEPARTMENT OF ENERGY
## FERNALD ENVIRONMENTAL MANAGEMENT PROJECT

THIS DRAWING PREPARED BY
PARSONS
THE RALPH M. PARSONS CO. - PARSONS MAIN, INC. - ENGINEERING-SCIENCE, INC.
CINCINNATI, OHIO

PROJECT NAME
REDESIGN OF 13.2 KV DISTRIBUTION

DRAWING TITLE
13.2 KV AERIAL DISTRIBUTION
SINGLE LINE DIAGRAM

000014

| DRAWN BY | DATE | TECHNICAL LEAD | DATE | CHECKED BY | DATE |
|---|---|---|---|---|---|
| R. PROSKI | 04-14-98 | T. FERRELL | 5/11/98 | R. JOHNSTON | 5/11/98 |
| PLANT/BLDG. NO. | | FLOOR | | SCALE NONE | CLASS |
| SUBMITTED FOR 30% ISSUE | | SUBMITTED FOR 60% ISSUE | | SUBMITTED FOR 90% ISSUE | |
| TECH LEAD N/A | | TECH LEAD N/A | | TECH LEAD T. FERRELL | |
| DATE | | DATE | | DATE 5/11/98 | |

REVISED UNDER PARSONS TASK ORDER NUMBER P-041

| PO NUMBER | FOF PROJECT NO. | DRAWING INDEX CODE NO. | SHEET NO. | REV. NO. |
|---|---|---|---|---|
| P0179 | 00-90701 | 96X-5900-E-00358 | E0001 | 21A |

pr/parsons/p0179/96e00358.dgn CURRENTLY RES 4211 PROPOSAL WORK

96e00358.m derr1907 Tuesday April 10 2001 at 07:52:19 AM EDT

## POLE INFORMATION / ELECTRICAL EQUIPMENT ON POLE

| POLE NEW | POLE NUMBER OLD | POLE HEIGHT | COORDINATES (NAD83) NORTHING | COORDINATES (NAD83) EASTING | 13.2 KV SERVICE ON POLE FOR 3C | FOR 2C | FOR 2C/3C | LIGHTNING ARRESTER(S) | FUSED CUTOUT(S) | FUSE SIZE(S) | LOAD BREAK(S) | TRANSFORMER(S) | * - KVA SIZE | NOTES : |
|---|---|---|---|---|---|---|---|---|---|---|---|---|---|---|
| 501 | N/A | 60' | 479,935 | 1,350,449 | ✓ | ✓ | | 501-3C-LA | 501-3C-FCL | 3-25E | | 501-3C-T | 3-167 | NOTE 3,10 KV |
| 502 | N/A | 60' | 479,935 | 1,350,363 | ✓ | ✓ | | 502-3C-LA<br>502-2C-LA | | | | | | NOTE 3,10 KV<br>NOTE 3,10 KV |
| 503 | N/A | 60' | 479,941 | 1,350,273 | ✓ | ✓ | | | | | | | | |
| 504 | N/A | 60' | 479,729 | 1,350,267 | ✓ | ✓ | | | | | | | | |
| 505 | N/A | 60' | 479,725 | 1,350,407 | ✓ | ✓ | | | | | | | | |
| 506 | N/A | 60' | 479,536 | 1,350,519 | ✓ | ✓ | | | | | | | | |
| 507 | N/A | 60' | 479,490 | 1,350,513 | ✓ | ✓ | | | | | | | | |
| 508 | N/A | 60' | 479,322 | 1,350,506 | ✓ | ✓ | | | | | | | | |
| 509 | N/A | 60' | 479,226 | 1,350,345 | ✓ | ✓ | | | | | | | | |
| 510 | N/A | 60' | 479,060 | 1,350,317 | ✓ | ✓ | | | | | | | | |
| 511 | OP60 | 60' | 478,898 | 1,350,235 | ✓ | ✓ | | | | | | | | |
| 512 | OP61 | 60' | 478,900 | 1,350,135 | ✓ | ✓ | | | | | | | | |
| 513 | OP62 | 60' | 478,903 | 1,350,035 | ✓ | ✓ | | | | | | | | |
| 514 | OP63 | 60' | 478,906 | 1,349,935 | ✓ | ✓ | | | | | | | | |
| 515 | OP64 | 60' | 478,909 | 1,349,835 | ✓ | ✓ | | | | | | | | |
| 516 | OP65 | 60' | 478,911 | 1,349,735 | ✓ | ✓ | | | | | | | | |
| 517 | OP66 | 60' | 478,914 | 1,349,635 | ✓ | ✓ | | | | | | | | |
| 518 | OP67 | 60' | 478,917 | 1,349,535 | ✓ | ✓ | | | | | | | | |
| 519 | OP68 | 60' | 478,920 | 1,349,435 | ✓ | ✓ | | | | | | | | |
| 520 | OP69 | 60' | 478,922 | 1,349,335 | ✓ | ✓ | | | | | | | | |
| 521 | OP70 | 60' | 478,922 | 1,349,248 | ✓ | ✓ | | | | | | | | |
| 522 | OP71 | 60' | 478,917 | 1,349,164 | ✓ | ✓ | | 522-2C-LA<br>522-3C-LA | | | | | | NOTE 3,15 KV<br>NOTE 3,15 KV |
| 523 | 24A | 60' | 478,899 | 1,349,019 | ✓ | ✓ | | | | | | | | |
| 524 | 24R | 60' | 478,884 | 1,348,885 | ✓ | ✓ | | | | | | | | |
| 525 | 23R | 60' | 478,873 | 1,348,782 | ✓ | ✓ | | | | | | | | |
| 526 | N/A | 60' | 478,830 | 1,348,614 | ✓ | ✓ | | | | | 526-2/3C-LB | | | |
| 527 | N/A | 60' | 478,787 | 1,348,472 | ✓ | ✓ | | | | | 527-2/3C-LB | | | |
| 528 | N/A | 45' | 478,767 | 1,348,324 | ✓ | ✓ | | | | | | | | |
| 529 | N/A | 45' | 478,764 | 1,348,175 | ✓ | ✓ | | | | | | | | |
| 530 | N/A | 45' | 478,789 | 1,348,027 | ✓ | ✓ | | | | | | | | |
| 531 | N/A | 45' | 478,842 | 1,347,898 | ✓ | ✓ | | | | | | | | |
| 532 | N/A | 45' | 478,951 | 1,347,789 | ✓ | ✓ | | | | | | | | |
| 533 | N/A | 45' | 479,121 | 1,347,735 | ✓ | ✓ | | | | | | | | |
| 534 | N/A | 45' | 479,226 | 1,347,729 | ✓ | ✓ | | | | | | | | |
| 535 | N/A | 45' | 479,382 | 1,347,726 | ✓ | ✓ | | | | | | | | |
| 536 | N/A | 45' | 479,527 | 1,347,739 | ✓ | ✓ | | | | | | | | |
| 537 | N/A | 45' | 479,663 | 1,347,793 | ✓ | ✓ | | 537-2C-LA | 537-2C-FCL | 3-140E | | | | |
| 538 | ST2 | 60' | 479,841 | 1,347,845 | ✓ | ✓ | | | | | | | | |
| 539 | ST1 | 60' | 480,003 | 1,347,878 | ✓ | ✓ | | | | | | | | |
| 540 | P13 | 60' | 480,082 | 1,347,786 | ✓ | ✓ | | | | | | | | |
| 541 | P9 | 60' | 480,157 | 1,347,888 | ✓ | ✓ | | 541-2C-LA | 541-F2C-FCL | | | | | |
| 542 | P7 | 60' | 480,217 | 1,347,808 | ✓ | ✓ | | | | | | | | |
| 543 | P5 | 60' | 480,308 | 1,347,810 | ✓ | ✓ | | | | | | | | |
| 544 | P4 | 60' | 480,414 | 1,347,814 | ✓ | ✓ | | | | | | | | |
| 545 | P3 | 60' | 480,515 | 1,347,739 | ✓ | ✓ | | | | | | | | |
| 546 | P15 | 60' | 480,619 | 1,347,749 | ✓ | ✓ | | | | | | | | |
| 547 | P16 | 60' | 480,724 | 1,347,758 | ✓ | ✓ | | 547-3C-LA | 547-3C-FC | 3-200E | | | | NOTE 3,15 KV |
| 548 | N/A | 60' | 480,827 | 1,347,756 | ✓ | ✓ | | | | | 548-2/3C-LB | | | |
| 551 | ST3 | 60' | 479,830 | 1,347,998 | ✓ | ✓ | | | | | | | | |
| 552 | ST4 | 60' | 479,820 | 1,348,147 | ✓ | ✓ | | 552-3C-LA<br>552-2C-LA | 552-3C-FC<br>552-2C-FC | 3-200E<br>3-200E | | | | NOTE 4,15 KV<br>NOTE 4,15 KV |
| 553 | ST5 | 45' | 479,784 | 1,347,971 | ✓ | | | | | | | | | |
| 554 | ST6 | 45' | 479,522 | 1,347,968 | ✓ | | | 554-3C-LA | 554-3C-FC | 3-15E | | 554-3C-T | 3-100 | NOTE 4,10 KV |
| 561 | N/A | 60' | 479,460 | 1,350,589 | | ✓ | | 561B-2C-LA | 561-2C-FCL<br>561B-2C-FCL | 3-140E<br>3-10E | | 561-2C-T | 3-37.5 | |
| 562 | N/A | 55' | 479,488 | 1,350,768 | | ✓ | | | | | | | | |
| 563 | N/A | 55' | 479,356 | 1,350,947 | | ✓ | | | | | | | | |
| 564 | N/A | 55' | 479,354 | 1,351,112 | | ✓ | | | | | | | | |
| 565 | N/A | 55' | 479,352 | 1,351,307 | | ✓ | | | | | | | | |
| 566 | N/A | 45' | 479,413 | 1,351,464 | | ✓ | | | | | | | | |
| 567 | N/A | 45' | 479,482 | 1,351,618 | | ✓ | | 567-2C-LA | | | | | | NOTE 3,10 KV |
| 571 | 41 | 55' | 478,863 | 1,349,557 | | ✓ | | | | 3-125E | 571-2C-LB | | | NOTE 7 |
| 572 | 42 | 55' | 478,710 | 1,349,590 | | ✓ | | | | | | | | |
| 573 | 43 | 55' | 478,527 | 1,349,580 | | ✓ | | | | | | | | |
| 574 | 44 | 55' | 478,345 | 1,349,574 | | ✓ | | | | | | | | |
| 575 | 45 | 55' | 478,158 | 1,349,556 | | ✓ | | | | | | | | |
| 576 | 46 | 55' | 477,969 | 1,349,498 | | ✓ | | 576-2C-LA | 576-2C-FC | 3-10E | | 576-2C-T | 3-25 | NOTE 4,15 KV |
| 577 | 47 | 55' | 477,809 | 1,349,448 | | ✓ | | | | | | | | |
| 578 | 48 | 55' | 477,655 | 1,349,419 | | ✓ | | | | | | | | |
| 579 | 49 | 55' | 477,685 | 1,349,268 | | ✓ | | 579-2C-LA | 579-2C-FC | 3-10E | | 579-2C-T | 3-25 | NOTE 4,15 KV |
| 580 | 50 | 55' | 477,491 | 1,349,386 | | ✓ | | | | | | | | |
| 581 | 51 | 55' | 477,339 | 1,349,350 | | ✓ | | | | | | | | |
| 582 | 52 | 55' | 477,353 | 1,349,200 | | ✓ | | | | | | | | |
| 583 | 53 | 55' | 477,374 | 1,349,046 | | ✓ | | 583-2C-LA | 583-2C-FC | 3-10E | | 583-2C-T | 3-25 | NOTE 4,15 KV |
| 584 | 54 | 55' | 477,147 | 1,349,319 | | ✓ | | | | | | | | |
| 585 | 55 | 55' | 477,887 | 1,349,161 | | ✓ | | | | | | | | |
| 586 | 56 | 55' | 477,835 | 1,349,027 | | ✓ | | 586-2C-LA | 586-2C-FC | 3-10E | | 586-2C-T | 3-25 | NOTE 4,15 KV |
| 587 | N/A | 55' | 477,168 | 1,349,482 | | ✓ | | 587-2C-LA | 587-2C-FC | 3-10E | | 587-2C-T | 3-25 | NOTE 4,15 KV |
| 588 | N/A | 55' | 476,938 | 1,349,177 | | ✓ | | | | | | | | |
| 589 | N/A | 55' | 476,777 | 1,349,288 | | ✓ | | | | | | | | |
| 590 | N/A | 55' | 476,638 | 1,349,270 | | ✓ | | 590-2C-LA | 590-2C-FC | 3-10E | | 590-2C-T | 3-25 | NOTE 4,15 KV |
| 591 | 24B | 55' | 478,988 | 1,348,958 | ✓ | | | | | | 591-3C-LB | | | |
| 592 | 24C | N/A | 479,867 | 1,348,879 | | | | | | | | | | |
| 593 | 24D | 60' | 479,872 | 1,348,836 | ✓ | | | 593-3C-LA | 593-3C-FC | 3-15E | | 593-3C-T | 3-100 | NOTE 4,15 KV |
| 594 | N/A | 55' | 479,081 | 1,348,676 | ✓ | | | | | | | | | |
| 595 | N/A | 55' | 479,889 | 1,348,537 | ✓ | | | | | | | | | |
| 596 | N/A | 55' | 479,119 | 1,348,378 | ✓ | | | 596-3C-LA | 596-3C-FCL | 3-25E | | 596-3C-T | 3-167 | NOTE 3,10 KV |
| 597 | 24E | N/A | 479,215 | 1,348,658 | | | | | | | | | | |
| 598 | 24F | N/A | 479,219 | 1,348,507 | | | | | | | | | | |

## POLE INFORMATION / ELECTRICAL EQUIPMENT ON POLE

| POLE NEW | POLE NUMBER OLD | POLE HEIGHT | COORDINATES (NAD83) NORTHING | COORDINATES (NAD83) EASTING | 13.2 KV SERVICE ON POLE FOR 3C | FOR 2C | FOR 2C/3C | LIGHTNING ARRESTER(S) | FUSED CUTOUT(S) | FUSE SIZE(S) | LOAD BREAK(S) | TRANSFORMER(S) | * - KVA SIZE | NOTES : |
|---|---|---|---|---|---|---|---|---|---|---|---|---|---|---|
| 601 | CT1 | 45' | 479,079 | 1,349,156 | ✓ | ✓ | | | | | | | | |
| 602 | CT2 | 45' | 479,236 | 1,349,162 | ✓ | ✓ | ✓ | | | | 602-3C-LB<br>602-2C-LB | | | |
| 603 | CT3 | 45' | 479,383 | 1,349,169 | | | ✓ | | | | | | | |
| 604 | CT4 | 45' | 479,495 | 1,349,178 | | | ✓ | | | | | | | |
| 605 | CT5 | 45' | 479,683 | 1,349,183 | | | ✓ | | | | | | | |
| 606 | CT6 | 45' | 479,817 | 1,349,192 | | | ✓ | 606-2C/3C-LA | 606-2C/3C-FC | 3-25E | | 606-2C/3C-T | 3-167 | NOTE 4,10 KV |
| 607 | LT1 | 40' | 479,522 | 1,349,001 | | | ✓ | | | | 607-2C/3C-LB | | | |
| 608 | LT2 | 40' | 479,517 | 1,348,929 | | | ✓ | | | | | | | |
| 609 | LT3 | 45' | 479,576 | 1,348,835 | | | ✓ | 609-2C/3C-LA | 609-2C/3C-FC | 3-15E | | 609-2C/3C-T | 3-100 | NOTE 3,10 KV |
| 610 | LT4 | 45' | 479,651 | 1,348,989 | | | ✓ | 610-2C/3C-LA | 610-2C/3C-FC | 3-15E | | 610-2C/3C-T | 3-100 | NOTE 3,10 KV |
| 611 | N/A | 60' | 479,516 | 1,348,780 | | | ✓ | | | | | | | |
| 612 | N/A | 60' | 479,519 | 1,348,598 | | | ✓ | 612-2C/3C-1A | | 3-40E | | SEE NOTE 5 | 1-750 | NOTE 3,10 KV |
| 621 | 22 | 45' | 478,798 | 1,348,718 | ✓ | | | | | 3-175E | 621-3C-LB | | | NOTE 7 |
| 622 | 21 | 45' | 478,676 | 1,348,667 | ✓ | | | | | | | | | |
| 623 | 20 | 45' | 478,555 | 1,348,619 | ✓ | | | | | | | | | |
| 624 | 19 | 45' | 478,441 | 1,348,575 | ✓ | | | | | | | | | |
| 625 | 18 | 45' | 478,320 | 1,348,527 | ✓ | | | | | | | | | |
| 626 | 17 | 45' | 478,202 | 1,348,482 | ✓ | | | 626-3C-LA | 626-3C-FC | 3-13E | | | 3-100 | NOTE 4,10 KV |
| 627 | 16 | 45' | 478,103 | 1,348,443 | ✓ | | | | | | | | | |
| 628 | 15R | 55' | 477,970 | 1,348,475 | ✓ | | | | | | | | | |
| 629 | 14R | 55' | 477,829 | 1,348,421 | ✓ | | | 629-3C-LA | 629-3C-FC | 3-10E | | 629-3C-T | 3-50 | NOTE 4,10 KV |
| 630 | 13R | 55' | 477,697 | 1,348,374 | ✓ | | | | | | 630-3C-LB | | | |
| 631 | 12R | 55' | 477,567 | 1,348,327 | ✓ | | | 631-3C-LA | 631-3C-FC | 3-10E | | 631-3C-T | 3-50 | NOTE 4,10 KV |
| 632 | 11R | 55' | 477,513 | 1,348,388 | ✓ | | | | | | | | | |
| 633 | 26 | 55' | 477,358 | 1,348,252 | ✓ | | | | | | | | | |
| 634 | 27 | 55' | 477,217 | 1,348,201 | ✓ | | | | | | | | | |
| 635 | 28 | 55' | 477,151 | 1,348,286 | ✓ | | | | | | | | | |
| 636 | 29 | 55' | 477,865 | 1,348,372 | ✓ | | | 636-3C-LA | 636-3C-FC | 3-10E | | 636-3C-T | 3-50 | NOTE 4,10 KV |
| 637 | 29B | 55' | 476,924 | 1,348,514 | ✓ | | | | | | | | | |
| 638 | 29C | 55' | 476,866 | 1,348,572 | ✓ | | | | | | | | | |
| 639 | 29D | 55' | 476,783 | 1,348,655 | ✓ | | | | | | | | | |
| 640 | 29E | 55' | 476,642 | 1,348,797 | ✓ | | | | | | | | | |
| 641 | 29F | 55' | 476,454 | 1,348,889 | ✓ | | | 641-3C-LA | 641-3C-FC | 3-10E | | 641-3C-T | 3-25 | NOTE 4,15 KV |
| 642 | N/A | 55' | 479,243 | 1,351,442 | | ✓ | | 642-2C-LA | 642-2C-FC | 3-10E | | 642-2C-T | 1-100<br>1-167 | 3 PH BANK W/<br>100, 167 TRANS |
| | | | | | | | | | | | | | | NOTE 4,10 KV |
| P299 | 643 | N/A | 479,200 | 1,351,471 | | | | | | | | | | NOTE 9 |
| 651 | 11 | 45' | 477,513 | 1,348,323 | ✓ | | | | | | | | | |
| 652 | 11A | 55' | 477,563 | 1,348,511 | ✓ | | | | | | | | | |
| 653 | 11B | 55' | 477,665 | 1,348,625 | ✓ | | | | | | | | | |
| 654 | 11C | 55' | 477,770 | 1,348,742 | ✓ | | | | | | | | | |
| 655 | 11D | 55' | 477,877 | 1,348,864 | ✓ | | | 655-3C-LA | 655-3C-FC | 3-10E | | 655-3C-T | 3-25 | NOTE 4,15 KV |
| 656 | N/A | 45' | 478,344 | 1,349,550 | | ✓ | | 656-2C-LA | 656-2C-FCL | 3-10E | | 656-2C-T | 3-25 | NOTE 4,15 KV |
| 661 | 30 | 55' | 477,105 | 1,348,115 | ✓ | | | | | | | | | |
| 662 | 31 | 55' | 477,072 | 1,347,934 | ✓ | | | 662-3C-LA | 662-3C-FC | 3-10E | | 662-3C-T | 3-50 | NOTE 4,10 KV |
| 663 | 32 | 55' | 477,098 | 1,347,844 | ✓ | | | | | | | | | |
| 664 | 33 | 55' | 477,221 | 1,347,691 | ✓ | | | | | | | | | |
| 665 | 34 | 55' | 477,359 | 1,347,568 | ✓ | | | | | | | | | |
| 666 | 35 | 55' | 477,418 | 1,347,574 | ✓ | | | 666-3C-LA | 666-3C-FC | 3-10E | | 666-3C-T | 3-37.5 | NOTE 4,10 KV |
| 667 | 36 | 55' | 477,607 | 1,347,593 | ✓ | | | 667-3C-LA | 667-3C-FC | 3-10E | | 667-3C-T | 3-25 | NOTE 4,10 KV |
| 671 | P8 | 60' | 480,223 | 1,347,916 | ✓ | | | 671-3C-LA | 671-3C-FC | 3-13E | | 671-3C-T | 3-100 | NOTE 4,15 KV |
| 672 | P10 | 50' | 480,153 | 1,347,934 | ✓ | | | 672-3C-LA | 672-3C-FCL | 3-140E | | | | |
| 673 | P17 | 60' | 480,132 | 1,347,939 | ✓ | | | 673-3C-LA | 673-3C-FC | 3-8E | | 673-3C-T | 1-75 | NOTE 4,15 KV |
| 674 | N/A | 60' | 480,084 | 1,348,805 | ✓ | | | 674-3C-LA | 674-3C-FCL | 3-10E | | 674-3C-T | 3-25 | NOTE 4,15 KV |
| 675 | N/A | 60' | 480,137 | 1,348,828 | ✓ | | | | | | | | | |
| 676 | N/A | 60' | 480,105 | 1,348,184 | ✓ | | | | | | | | | |
| 677 | N/A | 60' | 480,882 | 1,348,388 | ✓ | | | 677-3C-LA | 677-3C-FCL | 3-10E | | 677-3C-T | 3-25 | NOTE 4,15 KV |
| 681 | P2 | 60' | 480,521 | 1,347,633 | ✓ | | | 681-3C-LA | 681-3C-FC | 3-13E | | 681-3C-T | 3-100 | NOTE 4,15 KV |
| 684 | N/A | 55' | 479,867 | 1,347,332 | | ✓ | | 684-2C-LA | 684-2C-FCL | 3-10E | | 684-2C-T | 3-25 | NOTE 4,15 KV |
| 685 | N/A | 55' | 479,729 | 1,347,360 | | ✓ | | | | | | | | |
| 686 | N/A | 55' | 479,624 | 1,347,432 | | ✓ | | | | | | | | |
| 687 | N/A | 55' | 479,745 | 1,347,578 | | ✓ | | | | | | | | |
| 688 | N/A | 55' | 479,681 | 1,347,767 | | ✓ | | | | | | | | |
| 691 | | | | | | | ✓ | | | | | | | NOTE 6. |
| 692 | | | | | | | ✓ | | | | | | | NOTE 6. |
| 693 | | | | | | | ✓ | | | | | | | NOTE 6. |
| 694 | | | | | | | ✓ | | | | | | | NOTE 6. |
| 695 | | | | | | | ✓ | | | | | | | NOTE 6. |
| 696 | | | | | | | ✓ | | | | | | | NOTE 6. |
| 697 | | | | | | | ✓ | | | | | | | NOTE 6. |
| 698 | | | | | | | ✓ | | | | | | | NOTE 6. |
| 699 | | | | | | | ✓ | | | | | | | NOTE 6. |
| | | | SEE DWG. 96X-5900-E-____ | | | | | FOR CONTINUATION OF ELECTRICAL 13.2 KV POLE SCHEDULE | | | | | | |

### NOTES

1. SEE DRAWING 96X-5900-E-00356 FOR POLE LOCATIONS.
2. SEE DRAWING 96X-5900-E-00358 FOR CIRCUITS, EQUIPMENT, AND RATINGS.
3. LIGHTNING ARRESTORS (LA) ARE STAND ALONE, KV AS SHOWN.
4. LIGHTNING ARRESTORS (LA) ARE COMBINATION WITH FUSE CUTOUTS. KV AS SHOWN.
5. 750 KVA, 3 PHASE PAD MOUNT TRANSFORMER, NO. 612-2C/3C-PMXFMR.
6. SEE 91X-5500-E-02009 (SINGLE LINE) & OTHER WPRAP IT CORPORATION DRAWINGS FOR POLE INFORMATION.
7. SEE 96X-5900-E-01002 FOR THE SITE MASTER ELECTRICAL POWER DISTRIBUTION REFERENCE DRAWING DIAGRAM.
8. FUSES (FP) IN LINE WITH SWITCH.
9. POLE NUMBER RESERVED FOR FUTURE ADDITION OF 13.2 KV SERVICES. SEE 22X-5500-E-00953 FOR HIGH VOLTAGE UTILITY POLE NUMBER DESIGNATION SCHEDULE.
10. SEE DRAWING 95X-5500-E-02021 FOR POLE LOCATIONS WASTE STORAGE AREA EXTRACTION SYSTEM PHASE I, SFES SUPPLEMENT WELL PROJECT (EW-25, 26, 27, & 28)

3671

### LEGEND

| | |
|---|---|
| PPP-CC-EEE | TYPICAL, PPP-POLE NO.: CC-CIRCUIT NO.: EEE-EQUIPMENT |
| LA | LIGHTING ARRESTER (SEE NOTES 3, 4) |
| FC | FUSED CUTOUT |
| FCL | FUSED CUTOUT, LOAD BREAK RATED |
| LB | LOAD BREAK SWITCH, 3 POLE GANG OPERATED |
| FLB | FUSED LOAD BREAK SWITCH |
| T | TRANSFORMER |
| FP | PORCELAIN BODY FUSE |

| REF DWG NO. | DRAWING TITLE |
|---|---|
| 96X-5900-X-00350 | DRAWING INDEX |
| 96X-5900-E-00356 | MASTER PLAN-13.2 KV POLES & AERIAL DISTRIB. |
| 96X-5900-E-00358 | 13.2 KV AERIAL DISTRIBUTION - SINGLE LINE DIAGRAM |
| 91X-5500-E-02009 | WASTE PIT AREA - 13.2 KV - ONE LINE DIAGRAM |
| 22X-5500-E-00953 | HIGH VOLTAGE UTILITY POLE NUMBER DESIGNATION SITE PLAN |
| 95X-5500-X-02002 | DRAWING INDEX |
| 96X-5500-E-02003 | ELECTRICAL 13.2 KV POLE SCHEDULE, CONTINUED |
| 96X-5500-E-02021 | ELEC. 13.2 KV DISTRIBUTION & COMM. PLAN |

| REV. NO. | ISSUE OR REVISION PURPOSE - DESCRIPTION | INITIALS AND DATE | | |
|---|---|---|---|---|
| 4 | REVISED AS PER RES4211 (ADDED POLES & EQUIPMENT FROM RES4211 PROJECT AND O.S.D.F. LEACHATE AREA) | MWD 3/12/98 | | __/__/__ |
| 3 | | JLC 10/01/99 | PF 10/01/99 | LMV 10/01/99 |
| 2 | AS-BUILT & ADDED POLES 587 TO 590 | TPF 8/23/99 | PF 8/23/99 | N/A |
| 1 | AS-BUILT; INCORP. DCN 1753-2-004, -006 | RDP 6/18/99 | PF 6/18/99 | N/A |
| 0 | ISSUED FOR CONSTRUCTION | TPF 5/1/98 | PF 5/1/98 | N/A |

**UNITED STATES DEPARTMENT OF ENERGY**
**FERNALD ENVIRONMENTAL MANAGEMENT PROJECT**

THIS DRAWING PREPARED BY
PARSONS
THE RALPH M. PARSONS CO. - PARSONS MAIN, INC. - ENGINEERING-SCIENCE, INC.
CINCINNATI, OHIO

PROJECT NAME: REDESIGN OF 13.2 KV DISTRIBUTION

000015

DRAWING TITLE: ELECTRICAL 13.2KV POLE SCHEDULE

SHEET 1 OF 2

| DRAWN BY | DATE | TECHNICAL LEAD | DATE | CHECKED BY | DATE |
|---|---|---|---|---|---|
| L. N. HAGAMAN | 03/20/98 | T. FERRELL | 5/11/98 | R. JOHNSTON | 5/11/98 |

| PLANT/BLDG. NO. | FLOOR | SCALE | CLASS |
|---|---|---|---|
| | | NONE | |

| SUBMITTED FOR 30% ISSUE | SUBMITTED FOR 60% ISSUE | SUBMITTED FOR 90% ISSUE |
|---|---|---|
| TECH LEAD N/A | TECH LEAD N/A | TECH LEAD T.FERRELL |
| DATE N/A | DATE N/A | DATE 03/12/98 |

| PO NUMBER | FOR PROJECT NO. | DRAWING INDEX CODE NO. | SHEET NO. | REV. NO. |
|---|---|---|---|---|
| P0179 | 00-90701 | 96X-5900-E-00352 | E0019 | 4 |

g/po179/96e00352.dgn : CURRENTLY IN RES 4211 FOR NEW WORK

96e00352.m schw0542 Monday April 09 2001 at 09:52:01 AM EDT

## POLE INFORMATION / ELECTRICAL EQUIPMENT ON POLE

| POLE NUMBER NEW | POLE NUMBER OLD | POLE HEIGHT | COORDINATES NAD83 NORTHING | COORDINATES NAD83 EASTING | 13.2 KV SERVICE ON POLE FOR 3C | 13.2 KV SERVICE ON POLE FOR 2C | 13.2 KV SERVICE ON POLE FOR 2C/3C | LIGHTNING ARRESTER(S) | FUSED CUTOUT(S) | FUSE SIZE(S) | LOAD BREAK(S) | TRANSFORMER(S) | P - KVA SIZE | NOTES : |
|---|---|---|---|---|---|---|---|---|---|---|---|---|---|---|
| | | | SEE DWG. 96X-5900-E-00352 | | | | | FOR CONTINUATION OF ELECTRICAL 13.2 KV POLE SCHEDULE | | | | | | |
| 781 | N/A | N/A | 481,476 | 1,347,288 | | | ✓ | | | | | | | NOTE 6 |
| 782 | N/A | N/A | 488,894 | 1,347,875 | | | | | | | | | | NOTE 9 |
| 783 | N/A | N/A | 488,884 | 1,347,993 | | | | | | | | | | NOTE 9 |
| 784 | NW76 | N/A | 488,894 | 1,348,153 | | | | | | | | | | NOTE 9 |
| 785 | NW77 | N/A | 481,188 | 1,348,249 | | | | | | | | | | NOTE 9 |
| 711 | WP111 | N/A | 488,133 | 1,347,870 | | ✓ | | | | | | | | |
| 712 | N/A | N/A | 488,135 | 1,347,583 | | ✓ | | 712A-2C-LA | 712A-F2C-FCL | 2-20E | | XFR-31-007 | 1-167 | NOTE 4, 15 KVA |
| | | | | | | | | 712B-2C-LA | 712B-F2C-FCL | 2-20E | | XFR-31-008 | 1-167 | NOTE 4, 15 KVA |
| | | | | | | | | 712C-2C-LA | 712C-F2C-FCL | 2-20E | | XFR-31-009 | 1-167 | NOTE 4, 15 KVA |
| 730 | N/A | 55' | 479,568 | 1,350,592 | | ✓ | | 730-2C-LA | 730-2C-FCL | 2-5E | | 730-2C-T | 1-25 | |
| 731 | N/A | 55' | 479,702 | 1,350,598 | | ✓ | | | | | | | | |
| 732 | N/A | 55' | 479,834 | 1,350,603 | | ✓ | | | | | | | | |
| 733 | N/A | 55' | 479,967 | 1,350,607 | | ✓ | | | | | | | | |
| 734 | N/A | 55' | 488,894 | 1,350,612 | | ✓ | | | | | | | | |
| 735 | N/A | 55' | 488,197 | 1,350,616 | | ✓ | | | | | | | | |
| 736 | N/A | 55' | 488,337 | 1,350,622 | | ✓ | | | | | | | | |
| 737 | N/A | 55' | 488,461 | 1,350,638 | | ✓ | | 737-2C-LA | 737-2C-FCL | 3-5E | | 737-2C-T | 3-25 | |
| 738 | N/A | 55' | 488,628 | 1,350,628 | | ✓ | | | | | | | | |
| 739 | N/A | 55' | 488,762 | 1,350,629 | | ✓ | | | | | | | | |
| 740 | N/A | 55' | 488,895 | 1,350,631 | | ✓ | | | | | | | | |
| 741 | N/A | 55' | 481,822 | 1,350,633 | | ✓ | | 741-2C-LA | 741-2C-FCL | 2-5E | | 741-2C-T | 1-25 | |
| 742 | N/A | 55' | 481,156 | 1,350,635 | | ✓ | | | | | | | | |
| 743 | N/A | 55' | 481,294 | 1,350,636 | | ✓ | | | | | | | | |
| 744 | N/A | 55' | 481,428 | 1,350,637 | | ✓ | | 744-2C-LA | 744-2C-FCL | 2-5E | | 744-2C-T | 1-25 | |
| 745 | N/A | 55' | 481,562 | 1,350,640 | | ✓ | | | | | | | | |
| 746 | N/A | 55' | 481,668 | 1,350,641 | | ✓ | | | | | | | | |
| 747 | N/A | 55' | 481,828 | 1,350,643 | | ✓ | | 747-2C-LA | 747-2C-FCL | 2-5E | | 747-2C-T | 1-25 | |
| 748 | N/A | 55' | 481,998 | 1,350,645 | | ✓ | | 748-2C-LA | 748-2C-FCL | 3-15E | | 748-2C-T | 3-100 | |
| 749 | N/A | 55' | 482,896 | 1,350,646 | | ✓ | | | | | | | | |
| 750 | N/A | 55' | 482,229 | 1,350,648 | | ✓ | | 750-2C-LA | 750-2C-FCL | 2-5E | | 750-2C-T | 1-25 | |
| 751 | N/A | 55' | 482,363 | 1,350,650 | | ✓ | | | | | | | | |
| 752 | N/A | 55' | 482,496 | 1,350,650 | | ✓ | | | | | | | | |
| 753 | N/A | 55' | 482,629 | 1,350,653 | | ✓ | | 753-2C-LA | 753-2C-FCL | 2-5E | | 753-2C-T | 1-25 | |
| 754 | N/A | 55' | 482,762 | 1,350,654 | | ✓ | | | | | | | | |
| 755 | N/A | 55' | 482,895 | 1,350,655 | | ✓ | | | | | | | | |
| 756 | N/A | 55' | 483,028 | 1,350,658 | | ✓ | | 756-2C-LA | 756-2C-FCL | 2-5E | | 756-2C-T | 1-25 | |

1. SEE DRAWING 96X-5900-E-00356 FOR POLE LOCATIONS.
2. SEE DRAWING 96X-5900-E-00358 FOR CIRCUITS, EQUIPMENT, AND RATINGS.
3. LIGHTNING ARRESTORS (LA) ARE STAND ALONE, KV AS SHOWN.
4. LIGHTNING ARRESTORS (LA) ARE COMBINATION WITH FUSE CUTOUTS, KV AS SHOWN.
5. 750 KVA, 3 PHASE PAD MOUNT TRANSFORMER, NO. 612-2C/3C-PMOFNL
6. SEE 91X-5500-E-02009 (SINGLE LINE) & OTHER WPRAP IT CORPORATION DRAWINGS FOR POLE INFORMATION.
7. SEE 96X-5900-E-01002 FOR THE SITE MASTER ELECTRICAL POWER DISTRIBUTION REFERENCE DRAWING DIAGRAM.
8. FUSES (FP) IN LINE WITH SWITCH.
9. POLE NUMBER RESERVED FOR FUTURE ADDITION OF 13.2 KV SERVICES. SEE 22X-5500-E-00953 FOR HIGH VOLTAGE UTILITY POLE NUMBER DESIGNATION SCHEDULE.

3671

## LEGEND

| | |
|---|---|
| PPP-CC-EEE | TYPICAL, PPP-POLE NO.: CC-CIRCUIT NO.: EEE-EQUIPMENT |
| LA | LIGHTING ARRESTER (SEE NOTES 3, 4) |
| FC | FUSED CUTOUT |
| FCL | FUSED CUTOUT, LOAD BREAK RATED |
| LB | LOAD BREAK SWITCH, 3 POLE GANG OPERATED |
| FLB | FUSED LOAD BREAK SWITCH |
| T | TRANSFORMER |
| FP | PORCELAIN BODY FUSE |

| REF DWG NO. | DRAWING TITLE |
|---|---|
| 96X-5900-X-00350 | DRAWING INDEX |
| 96X-5900-E-00352 | 13.2 KV POLE SCHEDULE, SHEET 1 OF 2 |
| 96X-5900-E-00356 | MASTER PLAN-13.2 KV POLES & AERIAL DISTRIB. |
| 96X-5900-E-00358 | 13.2 KV AERIAL DISTRIBUTION - SINGLE LINE DIAGRAM |
| 22X-5500-E-00953 | HIGH VOLTAGE UTILITY POLE NUMBER DESIGNATION SITE PLAN |
| 91X-5500-E-02009 | WASTE PIT AREA - 13.2 KV - ONE LINE DIAGRAM |

PRELIMINARY

000016

| NO. | REVISIONS | DATE | DWN. BY | APPD. | NO. | REVISIONS | DATE | DWN. BY | APPD. | REF. DWG. NO. |
|---|---|---|---|---|---|---|---|---|---|---|
| | | | | | | | | | | 95X-5500-X-02002 |
| | | | | | | | | | | 96X-5900-E-00358 |
| | | | | | | | | | | 96X-5900-E-00352 |
| | | | | | | | | | | 90X-6000-E-00258 |
| | | | | | A | ISSUED FOR ENGINEERING REVIEW | 3/5/01 | MWD | | 22X-5500-E-00953 |

NOTE: FLUOR FERNALD CADD DRAWING. DO NOT REVISE MANUALLY.

CONFIGURATION MANAGEMENT DRAWING: YES / NO. ESTIMATED ATTACHED AS COMPONENTS CONTROL FOR MANAGEMENT CONTROL SEE NOTES.

COGNIZANT ENGINEER DATE

APPROVALS: CIVIL & STR., ELECTRICAL, ENGINEER, INSTRUMENT, MECHANICAL, CHECKED, APPROVED; SAFETY ENG., MAINTENANCE, FIRE PROTECT., WASTE MANAGE., SECURITY, PROJECTS

Fernald Environmental Management Project

FLUOR FERNALD, INC.

U.S. DEPARTMENT OF ENERGY

ARWWP SITE

WASTE STORAGE AREA EXTRACTION SYSTEM
PHASE I, AND SFES SUPPLEMENTAL WELL
ELECTRICAL 13.2 KV POLE SCHEDULE
SHEET 2 OF 2

RES. 4211 DATE MAR. 15, 2001 DRAWN M.W.DERROUGH

96X-5500-E-02003 A

FILE NAME: res4211/96xe2003.dgn

FFSLDGN 3/22/00

96xe2003.m schw0542 Wednesday April 04 2001 at 09:29:32 AM EST

3671

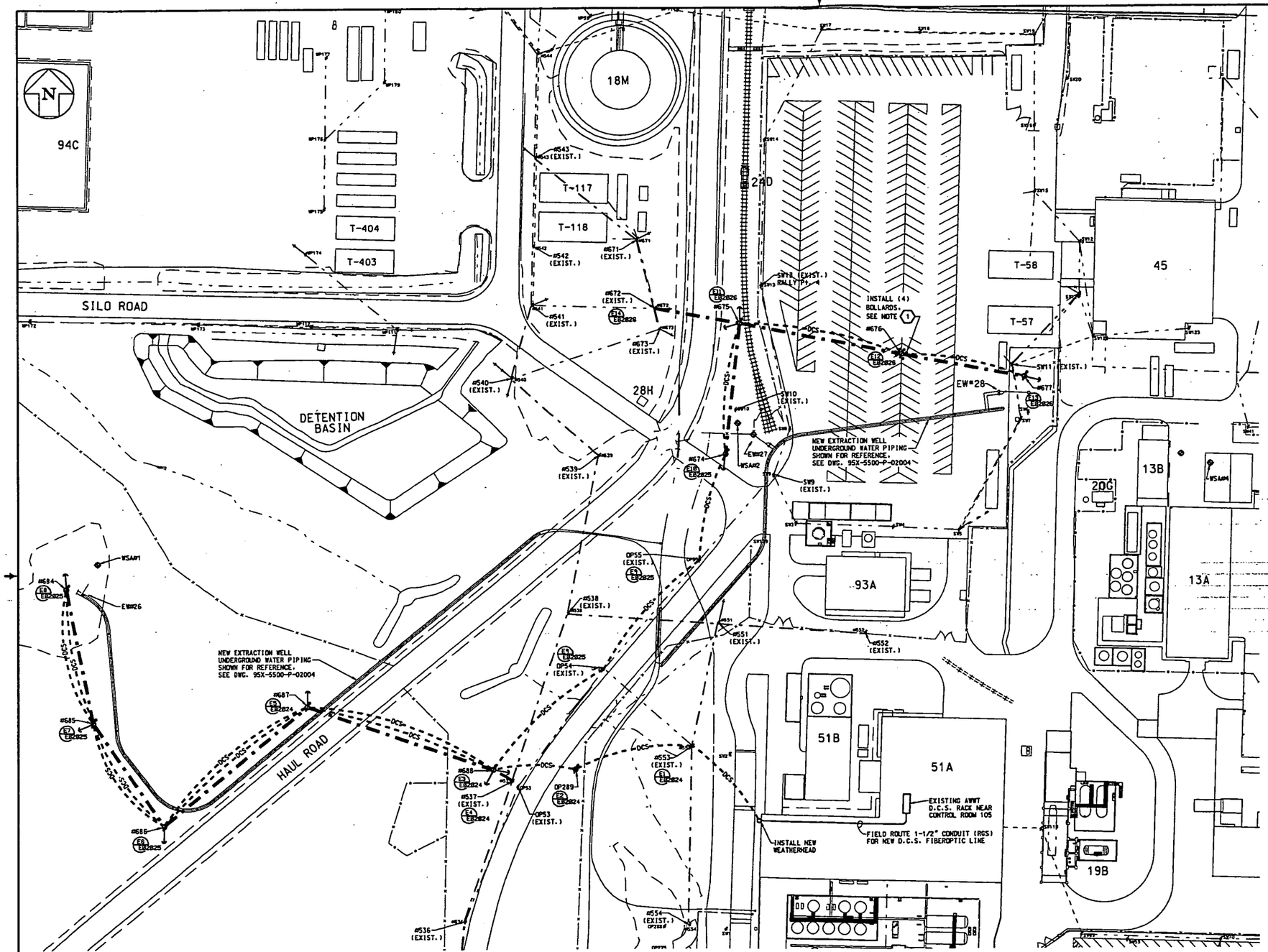


WASTE STORAGE AREA EXTRACTION SYSTEM PHASE 1, AND SFES SUPPLEMENTAL WELL
ELECTRICAL 13.2 KV DISTRIBUTION & COMM. PLAN

SCALE : 1" = 40'-0"

40 0 40 100 150 200

BAR SCALE IN FEET

## PROPOSED POLE COORDINATES (NAD83)

| POLE No. | POLE HEIGHT | POLE STATUS | EASTING | NORTHING | DETAIL DWG. No. | STATIC LINE | 13.2 KV LINE | 480 V LINE | COMM. LINE | D.C.S. (FIBEROPTIC) | BISSECTOR | DEADEND |
|---|---|---|---|---|---|---|---|---|---|---|---|---|
| #674 | 60ft | NEW | 1348005.10 | 480003.68 | 95X-5500-E-02023 | X | X | | | X | | X |
| #675 | 60ft | NEW | 1348019.82 | 480137.45 | 95X-5500-E-02026 | X | X | | | X | | X |
| #676 | 60ft | NEW | 1348183.75 | 480105.36 | 95X-5500-E-02026 | X | X | | | X | | |
| #677 | 60ft | NEW | 1348307.69 | 480082.04 | 95X-5500-E-02026 | X | X | | | X | | X |
| | | | | | | | | | | | | |
| #684 | 55ft | NEW | 1347331.68 | 479866.70 | 95X-5500-E-02025 | X | X | | | X | | X |
| #685 | 55ft | NEW | 1347359.76 | 479728.88 | 95X-5500-E-02025 | X | X | | | X | X | |
| #686 | 55ft | NEW | 1347431.69 | 479623.82 | 95X-5500-E-02025 | X | X | | | X | X | |
| #687 | 55ft | NEW | 1347577.89 | 479745.14 | 95X-5500-E-02024 | X | X | | | X | X | |
| #688 | 55ft | NEW | 1347766.94 | 479680.54 | 95X-5500-E-02024 | X | X | | | X | | X |
| | | | | | | | | | | | | |
| OP289 | 45ft | NEW | 1347851.80 | 479680.54 | 95X-5500-E-02024 | | | | | X | | |

## GUY WIRE ANCHORING:

| POLE# | ANCHOR(S) | GUY(S) | ANGLE OF GUY θ | OR DISTANCE FROM POLE (SEE LEGEND, THIS DWG.) |
|---|---|---|---|---|
| #674 | (1)-12" | (3)-5/8" | N/A | 15ft |
| #675 | (2)-12" | (3)-5/8" EACH ANCHOR | N/A | 15ft |
| #676 | NOT REQUIRED | | | |
| #677 | (1)-12" | (3)-5/8" | N/A | 15ft |
| #684 | (1)-12" | (3)-5/8" | N/A | 15ft |
| #685 | (1)-12" | (3)-5/8" | N/A | 15ft |
| #686 | (1)-12" | (3)-5/8" | N/A | 15ft |
| #687 | (1)-12" | (3)-5/8" | N/A | 15ft |
| #688 | (2)-12" | (3)-5/8" EACH ANCHOR | N/A | 15ft |

## CABLE SAG BETWEEN POLES:

| CABLE SPAN | SAG (@ 70° F) | REMARKS |
|---|---|---|
| #672 TO #675 | 4.00 FT | SLACK SPAN |
| #675 TO #676 | 3.00 FT | |
| #676 TO #677 | 3.00 FT | |
| #675 TO #674 | 3.00 FT | |
| #537 TO #688 | 4.00 FT | SLACK SPAN |
| #688 TO #687 | 3.00 FT | |

## D.C.S. FIBEROPTIC PATH (COMM. LINE)

| CABLE SPAN | No. OF CABLES |
|---|---|
| BLDG.51A TO #553 | 1 CABLE |
| #553 TO OP289 | 1 CABLE |
| OP289 TO #688 | 1 CABLE |
| #688 TO #687 | 2 CABLES |
| #687 TO #686 | 2 CABLES |
| #686 TO #685 | 2 CABLES |
| #685 TO #684 | 2 CABLES |
| | |
| #688 TO OP54 | 1 CABLE |
| OP54 TO OP55 | 1 CABLE |
| OP55 TO #674 | 1 CABLE |
| #674 TO #675 | 1 CABLE |
| #675 TO #676 | 1 CABLE |
| #676 TO #677 | 1 CABLE |

## LEGEND:

POLE, GUY WIRE, GRADE; θ = ANGLE OF GUY WIRE TO GROUND

- LIGHT POLE (EXISTING)
- POWER POLE (EXISTING)
- POWER/LIGHT POLE (EXISTING)
- POWER POLE (NEW)
- GUY WIRE (NEW)
- COMMUNICATION LINE (EXISTING OVERHEAD LINE)
- DCS — D.C.S. FIBEROPTIC LINE, (COMMUNICATION LINE, NEW OVERHEAD LINE)
- 120-480V POWER LINE (EXISTING OVERHEAD LINE)
- 120-480V POWER LINE (NEW UNDERGROUND LINE)
- 13.2 KV LINE (EXISTING OVERHEAD LINE)
- 13.2 KV LINE (NEW OVERHEAD LINE)

PRELIMINARY

000017

| NO. | REVISIONS | DATE | DWN. BY | APPD. | NO. | REVISIONS | DATE | DWN. BY | APPD. | REF. DWG. NO. |
|---|---|---|---|---|---|---|---|---|---|---|
| | | | | | A | ISSUED FOR ENGINEERING REVIEW | 11-0 | MWD | | 95X-5500-X-02002 |

NOTE: FLUOR DANIEL FERNALD CADD DRAWING. DO NOT REVISE MANUALLY.

CONFIGURATION MANAGEMENT DRAWING — REFERENCE / REF. — REFERS TO STRUCTURES OR COMPONENTS NOT IN THE CONFIGURATION MANAGEMENT CONTROL. SEE NOTES.

COGNIZANT ENGINEER DATE

| APPROVALS | | | |
|---|---|---|---|
| CIVIL & STR. | | SAFETY ENG. | |
| ELECTRICAL | | MAINTENANCE | |
| ENGINEER | | FIRE PROTECT. | |
| INSTRUMENT | | WASTE MANAGE | |
| MECHANICAL | | SECURITY | |
| | | PROJECTS | |
| CHECKED | | | |
| APPROVED | | | |

Fernald Environmental Management Project

FLUOR DANIEL FERNALD

U.S. DEPARTMENT OF ENERGY

ARWWP — SITE

WASTE STORAGE AREA EXTRACTION SYSTEM PHASE I, AND SFES SUPPLEMENTAL WELL ELEC. 13.2 KV DISTRIBUTION & COMM. PLAN

SCALE : 1" = 40'-0'

RES. 428 — DATE APRIL 6, 2001 — DRAWN M.R.DERROUGH

95X-5500-E-02021 A

FILE NAME: /res428/95xe2021.dgn

FORMAT REVISED 1/5/96 FORMAT REVISED 6/25/98 FDF LOGO

95xe2021.m schw0542 Monday April 09 2001 at 10:12:21 AM EDT

3671

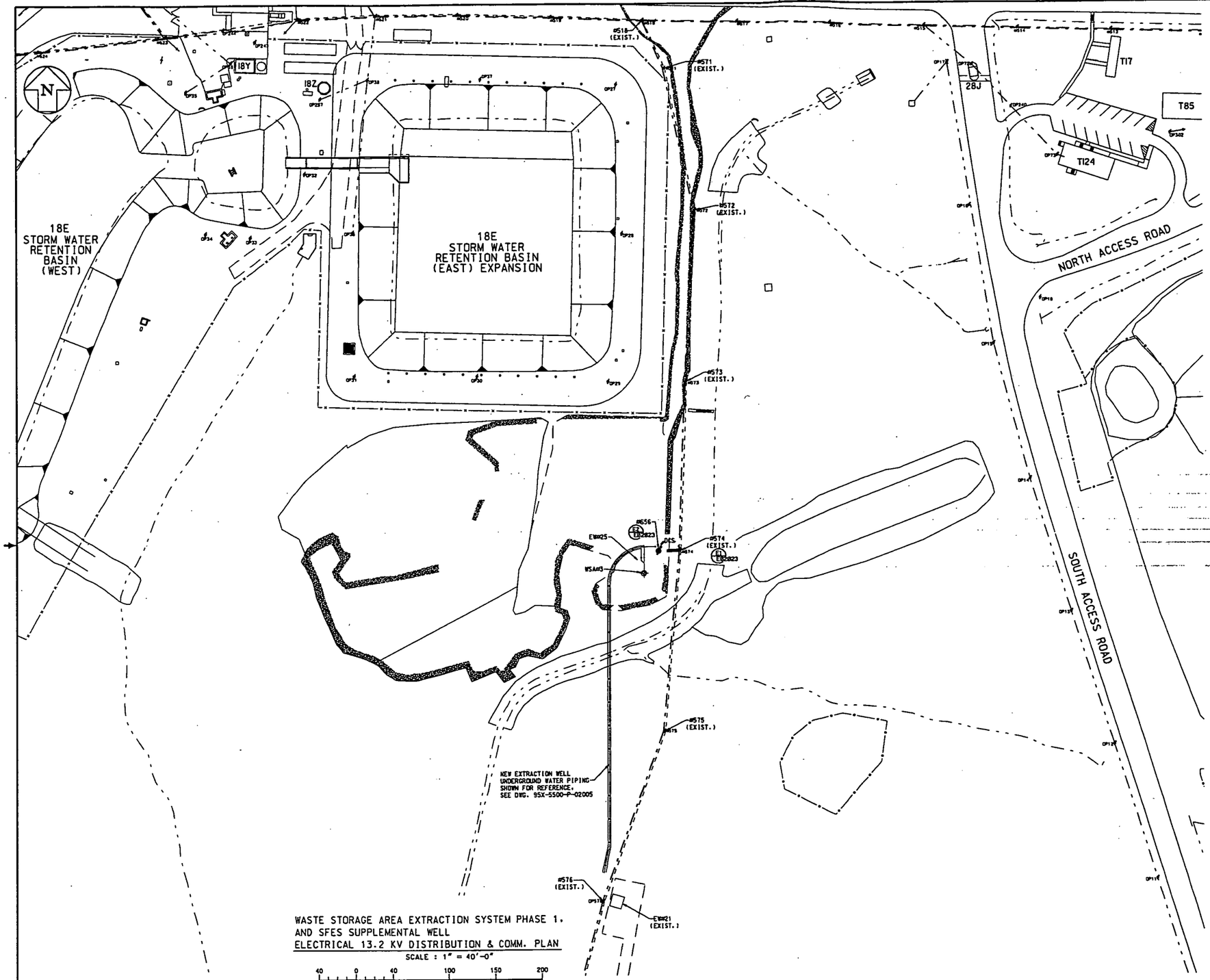


WASTE STORAGE AREA EXTRACTION SYSTEM PHASE 1.
AND SFES SUPPLEMENTAL WELL
ELECTRICAL 13.2 KV DISTRIBUTION & COMM. PLAN

SCALE : 1" = 40'-0"

40 0 40 100 150 200

BAR SCALE IN FEET

PROPOSED POLE COORDINATES (NAD83)

| POLE No. | POLE HEIGHT | POLE STATUS | EASTING | NORTHING | DETAIL DWG. No. | STATIC LINE | 13.2 KV LINE | 480 V LINE | COMM. LINE | DCS LINE (FIBEROPTIC) | BISSECTOR | DEADEND |
|---|---|---|---|---|---|---|---|---|---|---|---|---|
| #656 | 45ft | NEW | 1349549.92 | 478344.28 | 95X-5500-E-02023 | X | X | | | X | | |
| | | | | | | | | | | | | |

GUY WIRE ANCHORING:

| POLE# | ANCHOR(S) | GUY(S) | ANGLE OF GUY θ (SEE LEGEND, THIS DWG.) | OR | DISTANCE FROM POLE |
|---|---|---|---|---|---|
| #656 | NOT REQUIRED | | N/A | | N/A |

CABLE SAG BETWEEN POLES:

| CABLE SPAN | SAG (@ 70°F) | REMARKS |
|---|---|---|
| #574 TO #656 | 4.00 FT | SLACK SPAN |
| | | |

LEGEND:

POLE
GUY WIRE
GRADE
θ = ANGLE OF GUY WIRE TO GROUND

- LIGHT POLE (EXISTING)
- POWER POLE (EXISTING)
- POWER/LIGHT POLE (EXISTING)
- POWER POLE (NEW)
- GUY WIRE (NEW)
- COMMUNICATION LINE (EXISTING OVERHEAD LINE)
- DCS — D.C.S. FIBEROPTIC LINE. (COMMUNICATION LINE. NEW OVERHEAD LINE)
- 120-480V POWER LINE (EXISTING OVERHEAD LINE)
- 120-480V POWER LINE (NEW UNDERGROUND LINE)
- 13.2 KV LINE (EXISTING OVERHEAD LINE)
- 13.2 KV LINE (NEW OVERHEAD LINE)

PRELIMINARY

000018

| NO. | REVISIONS | DATE | DWN. BY | APPD. | NO. | REVISIONS | DATE | DWN. BY | APPD. | REF. DWG. NO. |
|---|---|---|---|---|---|---|---|---|---|---|
| | | | | | A | ISSUED FOR ENGINEERING REVIEW | 4-6 | MWD | | 95X-5500-X-02002 |

NOTE: FLUOR DANIEL FERNALD CADD DRAWING. DO NOT REVISE MANUALLY.

CONFIGURATION MANAGEMENT DRAWING — USE / DO NOT USE

SYSTEMS, STRUCTURES OR COMPONENTS CONTROLLED BY THIS DRAWING ARE UNDER CONFIGURATION MANAGEMENT CONTROL. SEE NOTES.

COGNIZANT ENGINEER — DATE

APPROVALS

| | | | |
|---|---|---|---|
| CIVIL & STR. | | SAFETY ENG. | |
| ELECTRICAL | | MAINTENANCE | |
| ENGINEER | | FIRE PROTECT. | |
| INSTRUMENT | | WASTE MANAGE. | |
| MECHANICAL | | SECURITY | |
| | | PROJECTS | |
| CHECKED | | | |
| APPROVED | | | |

Fernald Environmental Management Project

FLUOR DANIEL FERNALD

U.S. DEPARTMENT OF ENERGY

ARWWP — SITE

WASTE STORAGE AREA EXTRACTION SYSTEM
PHASE I, AND SFES SUPPLEMENTAL WELL
ELEC. 13.2 KV DISTRIBUTION & COMM. PLAN
SCALE: 1" = 40'-0"

RES 421
DATE APRIL 6, 2001
DRAWN M.R.DERBOROUGH

95X-5500-E-02022 | A

FILE NAME: /res421U/95xe2022.dgn

FORMAT REVISED 5/5/98
FORMAT REVISED 5/15/98 FDF5.DGN

95xe2022.m schw0542 Monday April 09 2001 at 10:27:24 AM EDT

1. SEE DRAWING 95X-5500-E-02028 FOR MATERIAL LIST.

3671

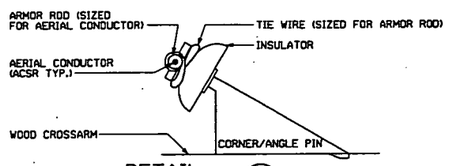


DETAIL 6 E02077
CROSSARM CORNER TYPE PINS
NTS
USE ON POLES AS REQUIRED

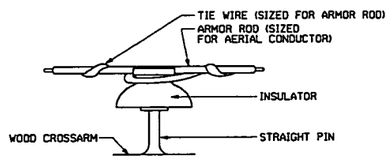


DETAIL 7 E02077
STRAIGHT ATTACHMENT TYPE PINS
NTS
USE ON POLES AS REQUIRED

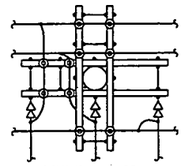

VIEW N
NTS

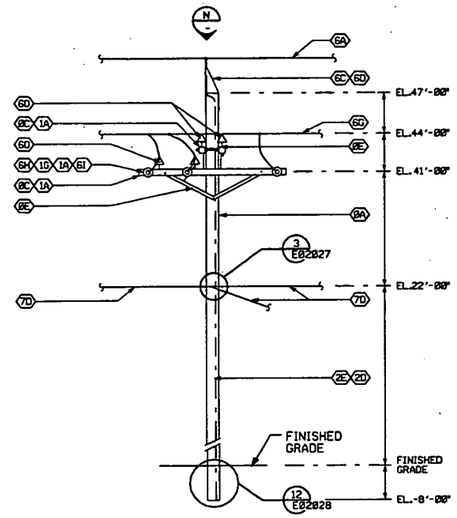


ELEVATION E1 E02022
POLE 574
EXISTING
NTS
(POLE INSTALLATION ON P0126 - DWG. 95X-5900-E-00241)

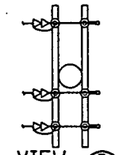

VIEW B
NTS

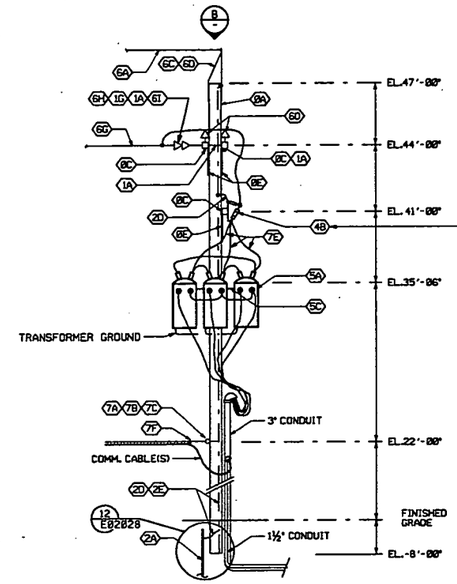


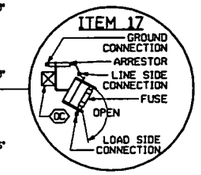


ELEVATION E2 E02022
POLE 656
NTS

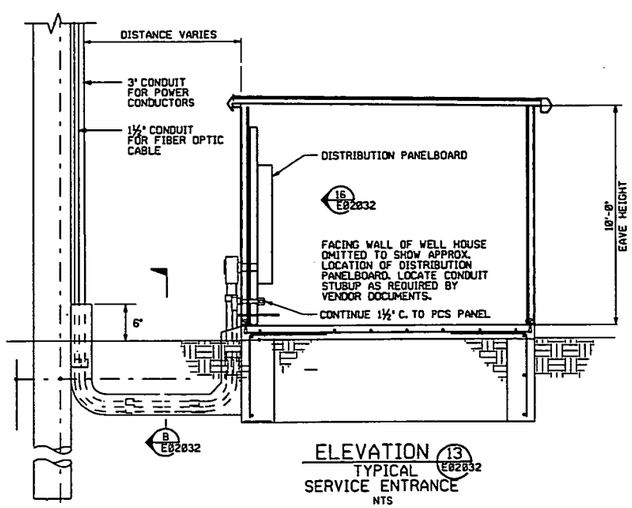


ELEVATION 13 E02032
TYPICAL SERVICE ENTRANCE
NTS

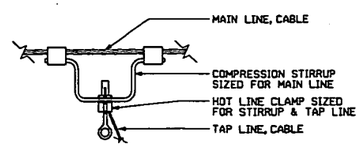


DETAIL 8
REMOVABLE TAP
NTS

| REF DWG NO. | DRAWING TITLE |
|---|---|
| 95X-5500-X-02002 | DRAWING INDEX |
| 95X-5500-E-02021 | ELEC. 13.2 KV DISTRIBUTION & COMM. PLAN |
| 95X-5500-E-02022 | ELEC. 13.2 KV DISTRIBUTION & COMM. PLAN |
| 95X-5500-E-02024 | ELECTRICAL ELEVATIONS, SECTIONS AND DETAILS |
| 95X-5500-E-02025 | ELECTRICAL ELEVATIONS, SECTIONS AND DETAILS |
| 95X-5500-E-02026 | ELECTRICAL ELEVATIONS, SECTIONS AND DETAILS |
| 95X-5500-E-02027 | ELECTRICAL SECTIONS AND DETAILS |
| 95X-5500-E-02028 | ELECTRICAL MATERIAL LIST AND STANDARD DETAILS |

PRELIMINARY

000019

| NO. | REVISIONS | DATE | DWN. BY | APPD. | NO. | REVISIONS | DATE | DWN. BY | APPD. | REF. DWG. NO. |
|---|---|---|---|---|---|---|---|---|---|---|
| | | | | | A | ISSUED FOR ENGINEERING REVIEW | 1/24 | GES | | 95X-5500-X-02002 |

NOTE: FLUOR FERNALD CADD DRAWING. DO NOT REVISE MANUALLY.

CONFIGURATION MANAGEMENT DRAWING — YES / NO
SYSTEMS, STRUCTURES OR COMPONENTS SHOWN ON THIS DRAWING ARE UNDER CONFIGURATION MANAGEMENT CONTROL. SEE NOTES.
COGNIZANT ENGINEER DATE

APPROVALS

| | | | |
|---|---|---|---|
| CIVIL & STR. | | SAFETY ENG. | |
| ELECTRICAL | | MAINTENANCE | |
| ENGINEER | | FIRE PROTECT. | |
| INSTRUMENT | | WASTE MANAGE. | |
| MECHANICAL | | SECURITY | |
| | | PROJECTS | |
| CHECKED | | | |
| APPROVED | | | |

Fernald Environmental Management Project
FLUOR FERNALD, INC.
U.S. DEPARTMENT OF ENERGY

ARWWP — SITE
WASTE STORAGE AREA EXTRACTION SYSTEM
PHASE I, AND SFES SUPPLEMENTAL WELL
ELECTRICAL
ELEVATIONS, SECTIONS AND DETAILS

RES 428
DATE FEB. 7, 2000
DRAWN G. SCHWARZMAN
95X-5500-E-02023 A

FILE NAME: /res428/95XE2023.dgn

FFS.DGN 3/22/00

95xe2023.m schw0542 Monday April 09 2001 at 11:00:20 AM EDT

3671

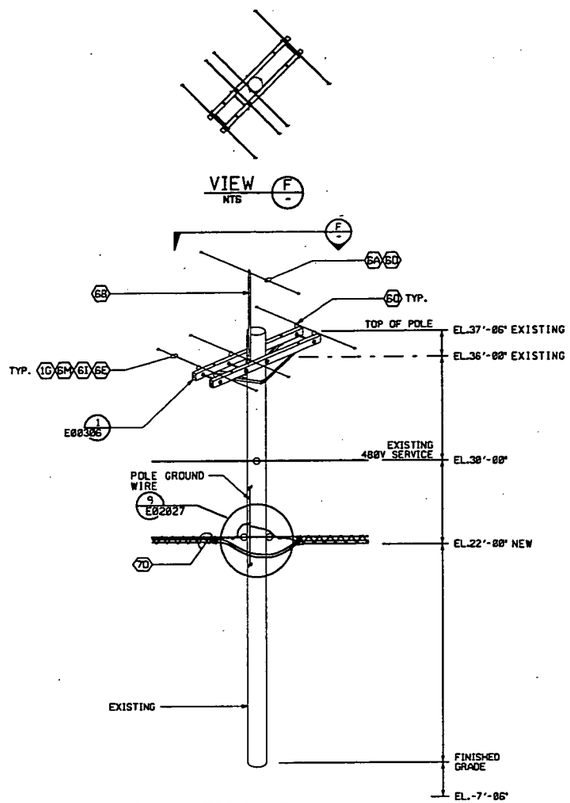


ELEVATION E1 REF E02021 E02---
POLE 553
NTS
(POLE INSTALLATION ON P0179 - DWG. 96X-5900-E-00308)

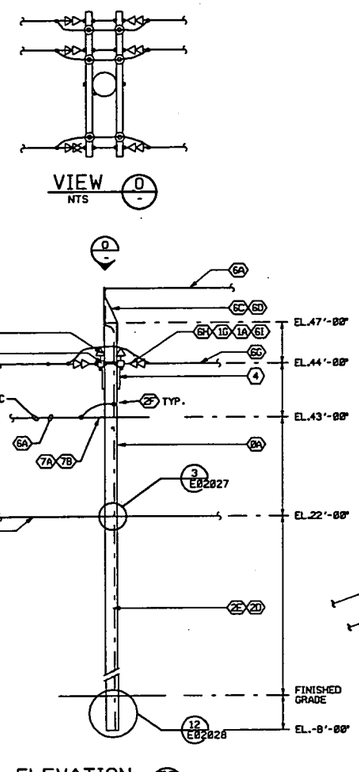


ELEVATION E3 E02021
POLE 688
NTS

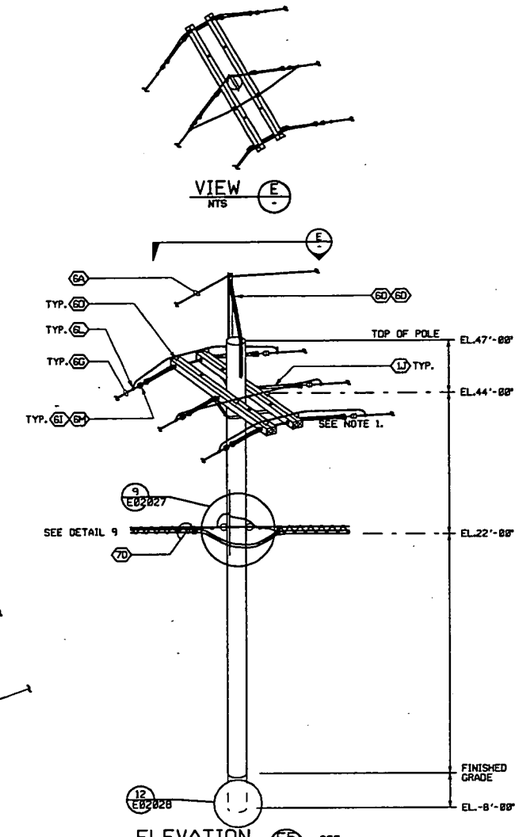


ELEVATION E5 REF E02021 E02---
POLE 687
NTS

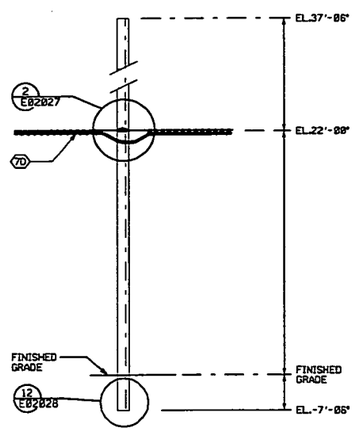


ELEVATION E2 E02021
POLE 289
NTS

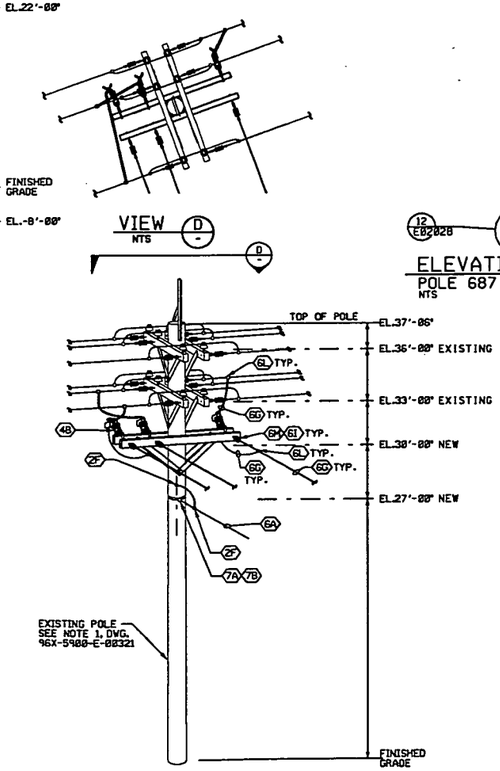


ELEVATION E4 E02021
POLE #537
EXISTING
NTS
(POLE INSTALLATION ON P0179 - DWG. 96X-5900-E-00322)

1. SEE DRAWING 95X-5500-E-02028 FOR MATERIAL LIST.

| REF DWG NO. | DRAWING TITLE |
|---|---|
| 95X-5500-X-02002 | DRAWING INDEX |
| 95X-5500-E-02021 | ELEC. 13.2 KV DISTRIBUTION & COMM. PLAN |
| 95X-5500-E-02022 | ELEC. 13.2 KV DISTRIBUTION & COMM. PLAN |
| 95X-5500-E-02024 | ELECTRICAL ELEVATIONS, SECTIONS AND DETAILS |
| 95X-5500-E-02025 | ELECTRICAL ELEVATIONS, SECTIONS AND DETAILS |
| 95X-5500-E-02026 | ELECTRICAL ELEVATIONS, SECTIONS AND DETAILS |
| 95X-5500-E-02027 | ELECTRICAL SECTIONS AND DETAILS |
| 95X-5500-E-02028 | ELECTRICAL MATERIAL LIST AND STANDARD DETAILS |

PRELIMINARY

000020

| NO. | REVISIONS | DATE | DWN. BY | APPD. | NO. | REVISIONS | DATE | DWN. BY | APPD. | REF. DWG. NO. |
|---|---|---|---|---|---|---|---|---|---|---|
| | | | | | A | ISSUED FOR ENGINEERING REVIEW | 1-28-01 | GES | | 95X-5500-X-02002 |

NOTE: FLUOR FERNALD CADD DRAWING. DO NOT REVISE MANUALLY.

CONFIGURATION MANAGEMENT DRAWING — USE / NOT USE
EXISTING STRUCTURES OR COMPONENTS SHOWN ON THIS DRAWING MUST ADHERE TO CONFIGURATION MANAGEMENT CONTROL. SEE NOTES.
COGNIZANT ENGINEER DATE

APPROVALS: CIVIL & STR. | ELECTRICAL | ENGINEER | INSTRUMENT | MECHANICAL | SAFETY ENG. | MAINTENANCE | FIRE PROTECT. | WASTE MANAGE. | SECURITY | PROJECTS | CHECKED | APPROVED

Fernald Environmental Management Project
FLUOR FERNALD, INC.
U.S. DEPARTMENT OF ENERGY

ARWWP SITE
WASTE STORAGE AREA EXTRACTION SYSTEM
PHASE I, AND SFES SUPPLEMENTAL WELL
ELECTRICAL
ELEVATIONS, SECTIONS AND DETAILS

RES 429 | DATE FEB. 7, 2001 | DRAWN G. SCHWARZMAN | 95X-5500-E-02024 | A

FFS.DGN 3/22/00

FILE NAME: /RES428/95XE02024.DGN

95xe2024.m schw0542 Monday April 09 2001 at 01:31:00 PM EDT

1. 1½" CONDUIT AND WEATHERHEAD FOR FIBER OPTIC CABLE REQUIRED ON POLES 12 AND 578 ONLY.

3671

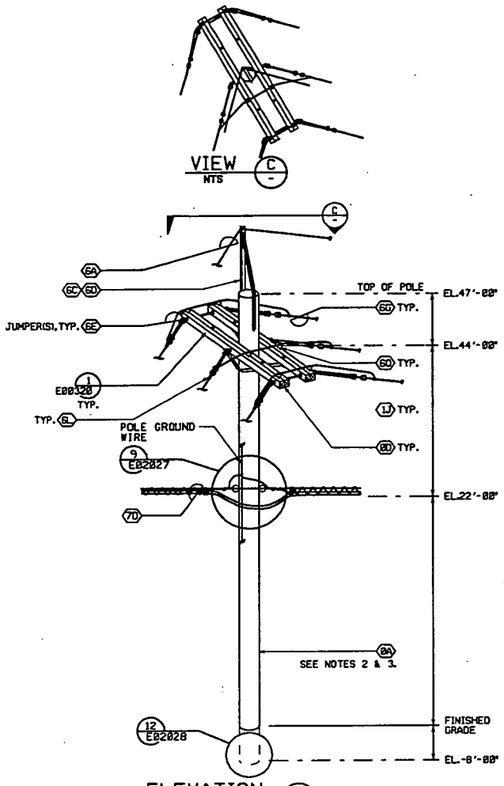


ELEVATION E6 E02021
POLE 686
NTS

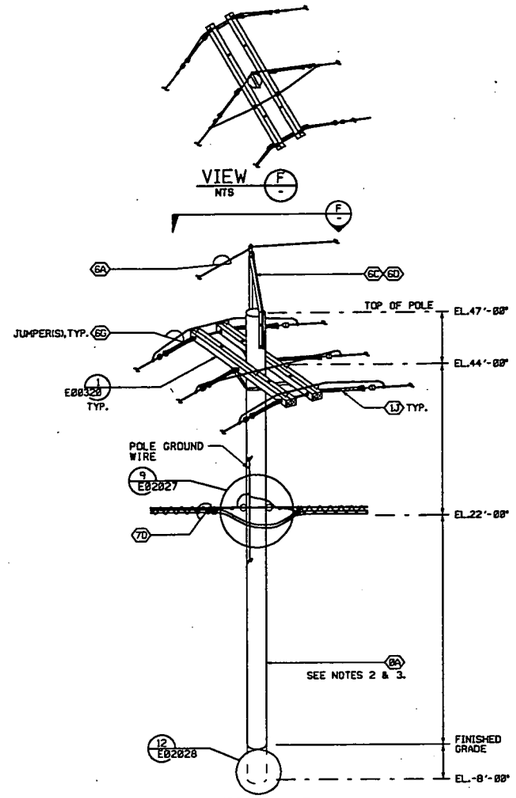


ELEVATION E7 E02021
POLE 685
NTS

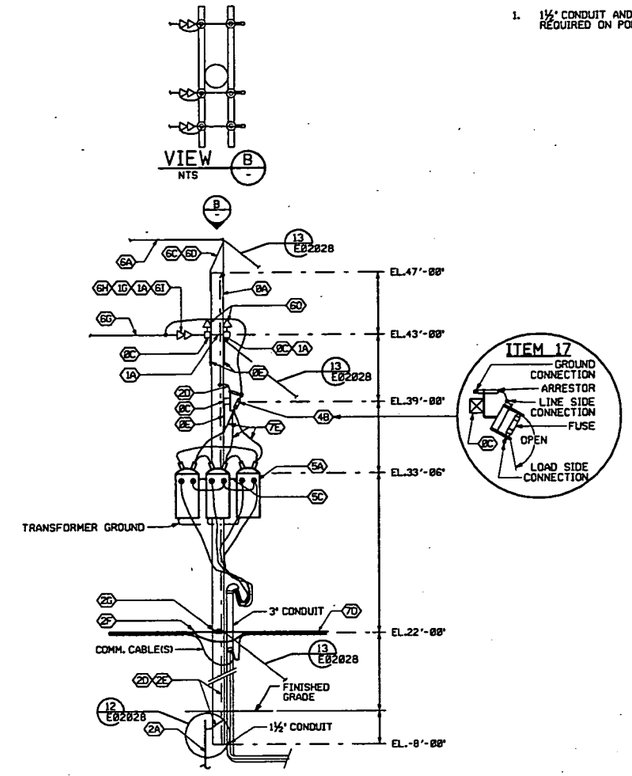


ELEVATION E8 E02021
POLE 684
NTS

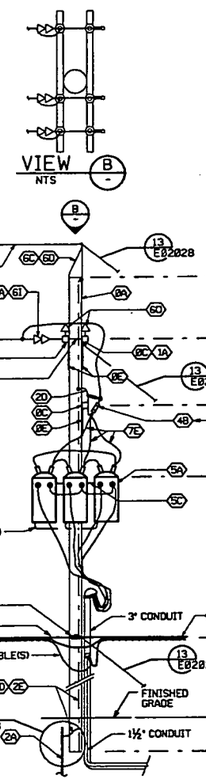


ELEVATION E10 E02021
POLE 674
NTS

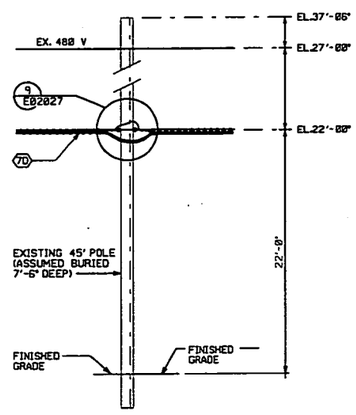


ELEVATION E9 E02021 REF E02---
POLE OP-54,OP-55
EXISTING
NTS

| REF DWG NO. | DRAWING TITLE |
|---|---|
| 95X-5500-X-02002 | DRAWING INDEX |
| 95X-5500-E-02021 | ELEC. 13.2 KV DISTRIBUTION & COMM. PLAN |
| 95X-5500-E-02022 | ELEC. 13.2 KV DISTRIBUTION & COMM. PLAN |
| 95X-5500-E-02024 | ELECTRICAL ELEVATIONS, SECTIONS AND DETAILS |
| 95X-5500-E-02025 | ELECTRICAL ELEVATIONS, SECTIONS AND DETAILS |
| 95X-5500-E-02026 | ELECTRICAL ELEVATIONS, SECTIONS AND DETAILS |
| 95X-5500-E-02027 | ELECTRICAL SECTIONS AND DETAILS |
| 95X-5500-E-02028 | ELECTRICAL MATERIAL LIST AND STANDARD DETAILS |

PRELIMINARY

000021

| NO. | REVISIONS | DATE | DWN. BY | APPD. | NO. | REVISIONS | DATE | DWN. BY | APPD. | REF. DWG. NO. |
|---|---|---|---|---|---|---|---|---|---|---|
| | | | | | A | ISSUED FOR ENGINEERING REVIEW | 3-8-0 | GES | | 95X-5500-X-02002 |

NOTE: FLUOR FERNALD CADD DRAWING, DO NOT REVISE MANUALLY.

CONFIGURATION MANAGEMENT DRAWING — USE / DO NOT USE
SYSTEMS, STRUCTURES OR COMPONENTS IDENTIFIED IN THIS DRAWING ARE UNDER CONFIGURATION MANAGEMENT CONTROL. SEE NOTES.
COGNIZANT ENGINEER DATE

| APPROVALS | | | | | |
|---|---|---|---|---|---|
| CIVIL & STR. | | | SAFETY ENG. | | |
| ELECTRICAL | | | MAINTENANCE | | |
| ENGINEER | | | FIRE PROTECT. | | |
| INSTRUMENT | | | WASTE MANAGE. | | |
| MECHANICAL | | | SECURITY | | |
| | | | PROJECTS | | |
| CHECKED | | | | | |
| APPROVED | | | | | |

Fernald Environmental Management Project
FLUOR FERNALD, INC.
U.S. DEPARTMENT OF ENERGY

ARWWP — SITE
WASTE STORAGE AREA EXTRACTION SYSTEM
PHASE I, AND SFES SUPPLEMENTAL WELL
ELECTRICAL
ELEVATIONS, SECTIONS AND DETAILS

RES 429
DATE FEB. 7, 2001
DRAWN G. SCHWARZMAN
95X-5500-E-02025 A

FFLOGN 3/22/00

FILE NAME: /RES420/95XE2025.DGN

95xe2025.m schw0542 Monday April 09 2001 at 02:26:18 PM EDT

3671

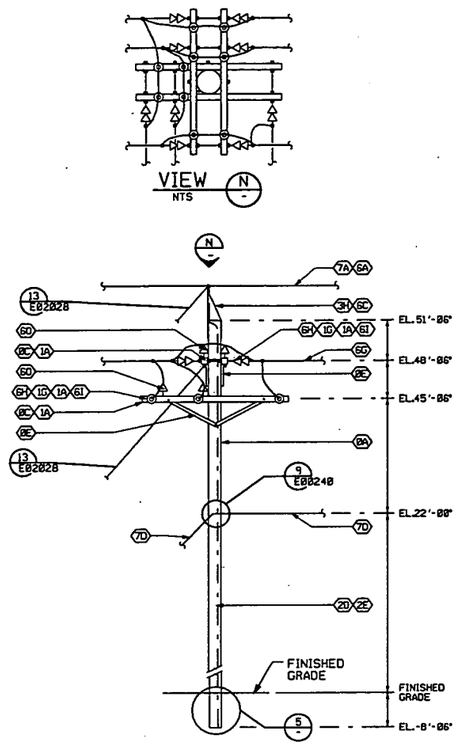


ELEVATION E11 REF E02021 E02---
POLE 675
NTS

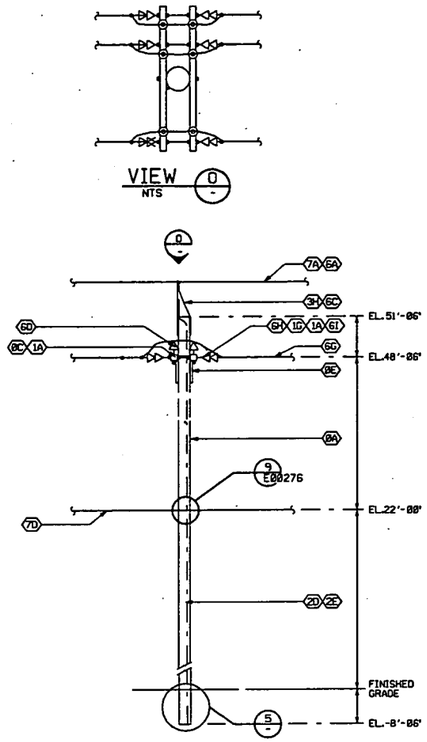


ELEVATION E12 REF E02021 E02---
POLE 676
NTS

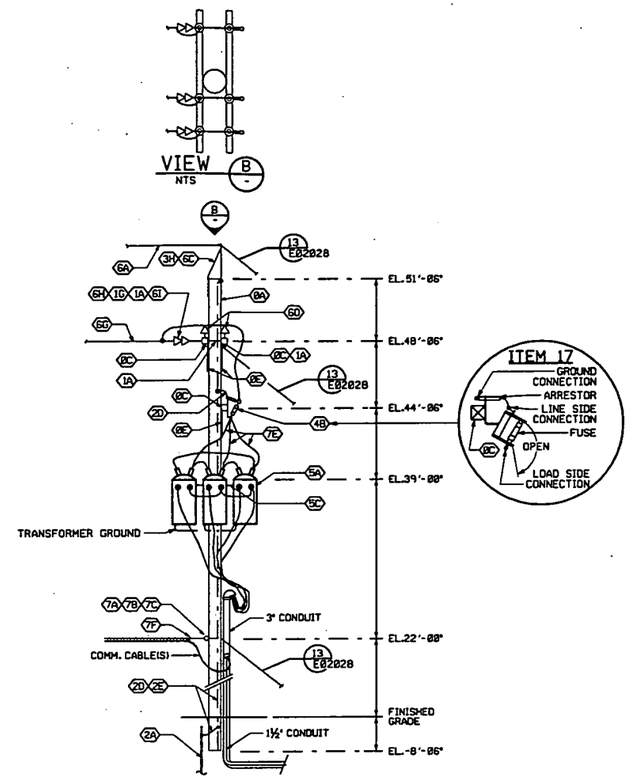


ELEVATION E13 E02021
POLE 677
NTS

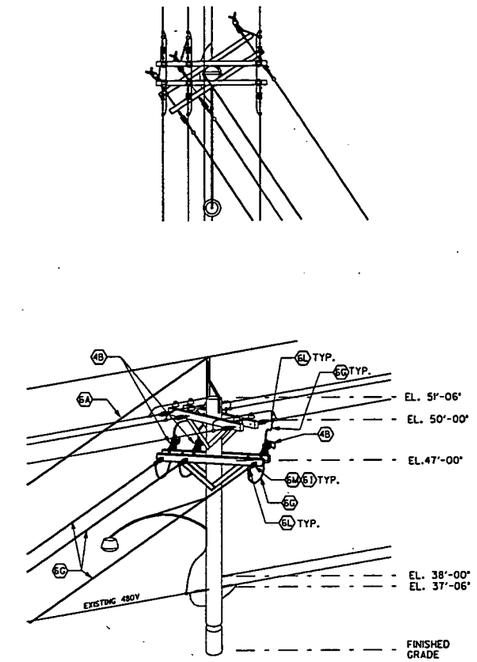


ELEVATION E14 E02021
POLE 672
NTS

000022

| REF DWG NO. | DRAWING TITLE |
|---|---|
| 95X-5500-X-02002 | DRAWING INDEX |
| 95X-5500-E-02021 | ELEC. 13.2 KV DISTRIBUTION & COMM. PLAN |
| 95X-5500-E-02022 | ELEC. 13.2 KV DISTRIBUTION & COMM. PLAN |
| 95X-5500-E-02024 | ELECTRICAL ELEVATIONS, SECTIONS AND DETAILS |
| 95X-5500-E-02025 | ELECTRICAL ELEVATIONS, SECTIONS AND DETAILS |
| 95X-5500-E-02026 | ELECTRICAL ELEVATIONS, SECTIONS AND DETAILS |
| 95X-5500-E-02027 | ELECTRICAL SECTIONS AND DETAILS |
| 95X-5500-E-02028 | ELECTRICAL MATERIAL LIST AND STANDARD DETAILS |

PRELIMINARY

| NO. | REVISIONS | DATE | DWN. BY | APPD. | NO. | REVISIONS | DATE | DWN. BY | APPD. | REF. DWG. NO. |
|---|---|---|---|---|---|---|---|---|---|---|
| | | | | | A | ISSUED FOR ENGINEERING REVIEW | 1-30 | GES/JAL | | 95X-5500-X-02002 |

NOTE: FLUOR FERNALD CADD DRAWING. DO NOT REVISE MANUALLY.

CONFIGURATION MANAGEMENT DRAWING — YES / NO
EXISTING STRUCTURES OR COMPONENTS SHOWN AS FOR GRAPHICAL AID ONLY. CONFIGURATION MANAGEMENT CONTROL. SEE NOTES.
COGNIZANT ENGINEER DATE

APPROVALS

| | | | | | |
|---|---|---|---|---|---|
| CIVIL & STR. | | | SAFETY ENG. | | |
| ELECTRICAL | | | MAINTENANCE | | |
| ENGINEER | | | FIRE PROTECT. | | |
| INSTRUMENT | | | WASTE MANAGE. | | |
| MECHANICAL | | | SECURITY | | |
| | | | PROJECTS | | |
| CHECKED | | | | | |
| APPROVED | | | | | |

Fernald Environmental Management Project
FLUOR FERNALD, INC.
U.S. DEPARTMENT OF ENERGY

ARWWP — SITE
WASTE STORAGE AREA EXTRACTION SYSTEM
PHASE I, AND SFES SUPPLEMENTAL WELL
ELECTRICAL
ELEVATIONS, SECTIONS AND DETAILS

RES 428
DATE FEB. 7, 2001
DRAWN G. SCHWARZMAN
95X-5500-E-02026 A

FILE NAME: /RES428/95XE2026.DGN

FFS.DGN 3/22/00

95xe2026.m schw0542 Tuesday April 10 2001 at 08:23:42 AM EDT

3671

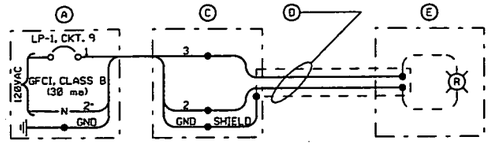


TYPICAL WIRING DIAGRAM FOR HEAT TRACING SYSTEM

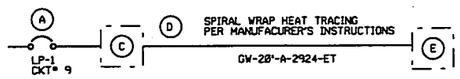


| BILL OF MATERIAL | | |
|---|---|---|
| ITEM | QUANTITY | DESCRIPTION |
| A | 1 | CIRCUIT BKR, 20A, GFCI, CLASS B, 30MA, 1 POLE |
| C | 1 | POWER CONNECTION KIT |
| D | 65 FT | SELF REGULATING HEAT TRACE, NOMINAL 15 W/FT |
| E | 1 | PILOT LIGHT CONNECTION KIT, WITH RED LIGHT |

DETAIL 1 E02027
HEAT TRACE RISER DIAGRAM
NTS

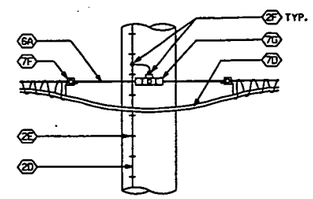


DETAIL 2 E02027
COMM. CABLE ATTACHMENT
NTS

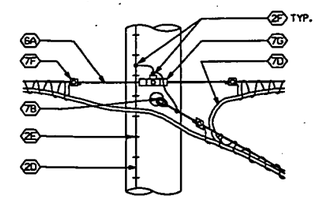


DETAIL 3 E02027
COMM. CABLE INTERSECTION
NTS

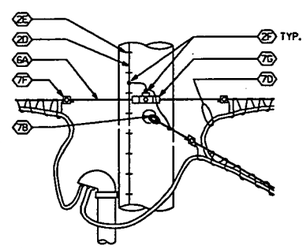


DETAIL 10 E02027
COMM. CABLE INTERSECTION
NTS

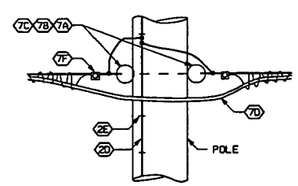


DETAIL 9 E02027
NTS

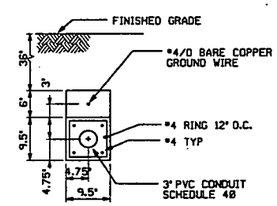


SECTION A E02027
NTS

| REF DWG NO. | DRAWING TITLE |
|---|---|
| 95X-5500-X-02002 | DRAWING INDEX |
| 95X-5500-E-02021 | ELEC. 13.2 KV DISTRIBUTION & COMM. PLAN |
| 95X-5500-E-02022 | ELEC. 13.2 KV DISTRIBUTION & COMM. PLAN |
| 95X-5500-E-02024 | ELECTRICAL ELEVATIONS, SECTIONS AND DETAILS |
| 95X-5500-E-02025 | ELECTRICAL ELEVATIONS, SECTIONS AND DETAILS |
| 95X-5500-E-02026 | ELECTRICAL ELEVATIONS, SECTIONS AND DETAILS |
| 95X-5500-E-02027 | ELECTRICAL SECTIONS AND DETAILS |
| 95X-5500-E-02028 | ELECTRICAL MATERIAL LIST AND STANDARD DETAILS |

PRELIMINARY

000023

| NO. | REVISIONS | DATE | DWN. BY | APPD. | NO. | REVISIONS | DATE | DWN. BY | APPD. | REF. DWG. NO. |
|---|---|---|---|---|---|---|---|---|---|---|
| | | | | | A | ISSUED FOR ENGINEERING REVIEW | 3-9 | GES | | 95X-5500-X-02002 |

NOTE:
FLUOR FERNALD CADD DRAWING. DO NOT REVISE MANUALLY.

CONFIGURATION MANAGEMENT DRAWING
YES NO
EXISTING ATTRIBUTES OR COMMENTS ARE PROVIDED ACCORDING TO CONFIGURATION MANAGEMENT CONTROL PER NOTES.
COGNIZANT ENGINEER DATE

| APPROVALS | | | |
|---|---|---|---|
| CIVIL & STR. | | SAFETY ENG. | |
| ELECTRICAL | | MAINTENANCE | |
| ENGINEER | | FIRE PROTECT. | |
| INSTRUMENT | | WASTE MANAGE. | |
| MECHANICAL | | SECURITY | |
| | | PROJECTS | |
| CHECKED | | | |
| APPROVED | | | |

Fernald Environmental Management Project
FLUOR FERNALD, INC.
U.S. DEPARTMENT OF ENERGY

ARWWP SITE
WASTE STORAGE AREA EXTRACTION SYSTEM
PHASE I, AND SFES SUPPLEMENTAL WELL
ELECTRICAL SECTIONS & DETAILS
NOT TO SCALE

RES 429
DATE MAR. 5, 2001
DRAWN G. SCHWARZMAN
95X-5500-E-02027 A

FFS.DGN 3/22/00

FILE NAME: res421l/95xe2027.dgn

95xe2027.m schw0542 Tuesday April 10 2001 at 09:22:20 AM EDT

3671

## MATERIAL LIST

| ITEM TAG | POLE MATERIAL ITEMS |
|---|---|
| 0A | WOODEN POLE - ANSI 05.1, CLASS 2, SOUTHERN PINE, PENTACHLOROPHENOL TREATED TO 12 lbs/ft$^3$, AWPA C4. SEE "POLE SCHEDULE" FOR REQUIRED LENGTH. |
| 0B | WOODEN CROSSARM - 3½" X 4½" X 6'-0". SOUTHERN PINE, PENTACHLOROPHENOL TREATED TO 8 lbs/ft$^3$. |
| 0C | WOODEN CROSSARM - 3½" X 4½" X 8'-0". SOUTHERN PINE, PENTACHLOROPHENOL TREATED TO 8 lbs/ft$^3$. |
| 0D | WOODEN CROSSARM - 3¾" X 4¾" X 10'-0". SOUTHERN PINE, PENTACHLOROPHENOL TREATED TO 8 lbs/ft$^3$. |
| 0E | CROSSARM ANGLE BRACE - 63" LONG X 18" DROP, HOT DIP GALVANIZED ASTM A675 (2 PIECE BRACES ARE ACCEPTABLE). (2 SINGLE CROSSARM BRACES SHALL BE USED WHEN REQUIRED BY ELEC. EQUIPMENT, I.E. FUSED CUTOUTS.) |

| ITEM TAG | HARDWARE ITEMS |
|---|---|
| 1A | DOUBLE ARMING ⅝" BOLT - FULL THREAD, HOT DIP GALVANIZED, LENGTH AS REQUIRED. |
| 1B | ⅝" MACHINE BOLT - ANSI C135.1, LENGTH AS REQUIRED, HOT DIP GALVANIZED. |
| 1C | SQUARE WASHER - FOR ⅝" BOLT, HOT DIP GALVANIZED. |
| 1D | ROUND WASHER - FOR ⅝" BOLT, HOT DIP GALVANIZED. |
| 1E | SPRING LOCK WASHER - FOR ⅝" BOLT, HOT DIP GALVANIZED. |
| 1F | SQUARE NUT - FOR ⅝" BOLT, HOT DIP GALVANIZED. |
| 1G | EYENUT - ANSI C135.1, FOR ⅝" BOLT, HOT DIP GALVANIZED. |
| 1H | THIMBLE EYENUT - FOR ⅝" BOLT, HOT DIP GALVANIZED. |
| 1J | ASSEMBLY, EXTENSION LINK 20", WITH END CLEVIS, ANCHOR SHACKLE AND EYENUT, ALL HOT DIP GALVANIZED, PLUS CLEVISES FOR DOUBLE ARMING BOLT ATTACHMENT. |
| 1K | CROSSARM GAIN - 3" X 4", TEETH ON BOTH SIDES, HOT DIP GALVANIZED. |

| ITEM TAG | GROUNDING ITEMS |
|---|---|
| 2A | GROUND ROD - ¾" DIAMETER X 10' LONG, COPPERWELD. |
| 2B | GROUND ROD CLAMP (FOR GROUND WIRE CONNECTION) - ¾" DIA., BRONZE OR BRASS. |
| 2C | GROUND CONDUCTOR - #2 AWG, BARE SOLID COPPER, SOFT DRAWN. |
| 2D | GROUND CONDUCTOR - #4 AWG, BARE SOLID COPPER, SOFT DRAWN. |
| 2E | GROUND STAPLE - COPPERCLAD, 1½" LONG. |
| 2F | GROUNDING CLAMP - WIRE TO WIRE. |
| 2G | POLE BOTTOM GROUND PLATE - COPPER (OR COIL GROUND WIRE ON POLE BOTTOM) |

| ITEM TAG | GUYING ITEMS |
|---|---|
| 3A | GUY ANCHOR SYSTEM - HELIX SCREW TYPE, GALVANIZED STEEL, ASTM A36/36M WITH MINIMUM PULLOUT CAPACITY OF 23,000 lbs. FOR SOIL WITH BLOW COUNT OF 10, MID-STRENGTH INSTALLATION TORQUE SERIES, EYENUT TO ACCOMMODATE UP TO THREE GUY WIRES. |
| 3B | GUY WIRE - ½" DIA. STRAND, CLASS A OR B GALVANIZED, ASTM A475 1 X 7 EXTRA HIGH STRENGTH CONSTRUCTION, MINIMUM TENSILE STRENGTH OF 26,000 lbs. |
| 3C | DEADEND GRIP - PREFORMED TWISTED LOOP, CLASS A OR B GALVANIZED, SIZED FOR GUY WIRE. |
| 3D | GUY STRAIN INSULATOR - ⅝" SIZE, ANSI C29.4 CLASS 54-1. |
| 3E | FIBERGLASS GUY STRAIN INSULATOR - 16,000 LBS. RATING, HOT-DIPPED GALVANIZED CLEVIS-THIMBLE-EYE FITTINGS, LENGTH AS REQUIRED. |
| 3F | ¾" THIMBLEYE ANGLE BOLT (LENGTH AS REQUIRED), WASHER, SPRING LOCK WASHER, NUT, HOT DIP GALVANIZED, MINIMUM TENSILE STRENGTH OF 18,000 lbs. |
| 3G | GUY WIRE MARKER - HALF ROUND UV RESISTANT YELLOW PLASTIC, 2" WIDE X 96" LONG, WITH MOUNTING HARDWARE. |
| 3H | GUY STATIC ATTACHMENT - THIMBLEYES(2) WITH ROD SIZED FOR BAYONET HOLE, HOT DIP GALVANIZED. |

| ITEM TAG | ELECTRICAL SWITCH ITEMS |
|---|---|
| 4A | CUTOUT SWITCH/ARRESTER COMBINATION UNIT, FOR CROSSARM MOUNTING; CUTOUTS, ANSI C37.42, LOAD BREAK, UNLESS EXISTING, DROPOUT TYPE, 110 KV BIL, SEE SINGLE LINE FOR RATINGS. SEE ITEM TAG 4E BELOW FOR ARRESTER REQUIREMENTS. |
| 4B | FUSED CUTOUT SWITCH/ARRESTER COMBINATION UNIT, FOR CROSSARM MOUNTING; CUTOUTS, ANSI C37.42, LOAD BREAK, UNLESS EXISTING, DROPOUT TYPE, 110 KV BIL, FUSES, TYPE K, SEE SINGLE LINE FOR RATINGS, SEE ITEM TAG 4E BELOW FOR ARRESTER TYPE AND RATING. |
| 4C | LOAD BREAK SWITCH, FOR CROSSARM MOUNTING; ANSI C37.30, 110 KV BIL, FUSES, WHERE REQUIRED, TYPE K, SEE SINGLE LINE FOR RATINGS. |
| 4D | LOAD BREAK SWITCH, FOR CROSSARM MOUNTING, HORIZONTAL, S & C CAT. # 147432-D-S2; ANSI C37.30, 110 KV BIL, FUSES, WHERE REQUIRED, TYPE K; SEE SINGLE LINE FOR RATINGS. |
| 4E | ARRESTER, DIRECT CONNECTED, 9 KV, IEEE C62.1, RISER POLE TYPE, METAL OXIDE VALVE W/CROSSARM MOUNTING HARDWARE. |
| 4F | SWITCH NAMEPLATE - ¼" BAKELITE SIGN MATERIAL SIZED FOR NUMBER OF CHARACTERS, BLACK LETTERS ON WHITE BACKGROUND WITH MOUNTING HOLES SIZED FOR ¼" BOLTS SET AT BOTH ENDS. MOUNT THE NAMEPLATE AT EYE LEVEL NEAR OPERATING HANDLE. SEE DETAIL 5. |

| ITEM TAG | TRANSFORMER ITEMS |
|---|---|
| 5A | TRANSFORMER - POLE MOUNTED, SEE SINGLE LINE FOR RATINGS AND QUANTITIES. ANSI C57.12.20, 1 PHASE, OIL FILLED, 125 KV BIL, 65°C OVER 30°C RISE, EXTERNALLY OPERATED CHANGER FOR TWO EACH 2½% ABOVE AND BELOW NORMAL VOLTAGE TAPS. |
| 5B | POLE MOUNTED EQUIPMENT BRACKET FOR SINGLE TRANSFORMER - DOUBLE-BANDED, HEAVY DUTY CLUSTER MOUNT, HIGH-STRENGTH STEEL GALVANIZED OR ALUMINUM, WITH GROUNDING LUG. SIZED FOR ITEM 5A ABOVE. |
| 5C | POLE MOUNTED EQUIPMENT BRACKET FOR THREE TRANSFORMERS - DOUBLE-BANDED, HEAVY DUTY CLUSTER MOUNT, HIGH-STRENGTH STEEL GALVANIZED OR ALUMINUM, WITH GROUNDING LUG. SIZED FOR ITEM 5A ABOVE. |

| ITEM TAG | STATIC LINE, CABLE(S) AND INSULATOR ITEMS |
|---|---|
| 6A | STATIC LINE - ⅜" DIA. STRAND, CLASS A OR B GALVANIZED, 1 X 7 HIGH STRENGTH CONSTRUCTION, MINIMUM TENSILE STRENGTH OF 10,000 LBS. |
| 6B | STATIC LINE BAYONET - STRAIGHT, 66" LENGTH, HOT DIP GALVANIZED. |
| 6C | STATIC LINE BAYONET - CORNER, 66" LENGTH, HOT DIP GALVANIZED. |
| 6D | STATIC LINE CLAMP - HOT DIP GALVANIZED J-BOLT DESIGNED TO FIT INTO TWO HOLES AT TOP OF BAYONET. |
| 6E | 13.2KV AERIAL CABLE - 336.4KCMIL ACSR "MERLIN", ASTM B232. |
| 6G | 13.2KV AERIAL CABLE - #2 AWG ACSR "SPARROW", ASTM B232. |
| 6I | DEADEND CLAMP - ALUMINUM, STRAIGHT-LINE, SIZED FOR AERIAL CABLE. |
| 6J | CABLE TO CABLE CONNECTOR USED FOR XFMR PRIMARY CONNECTION TO OVERHEAD - COMPRESSION STIRRUP (ALUM., SIZED FOR AERIAL CABLE) WITH MECHANICAL HOT LINE CLAMP (ALUM., SIZED FOR STIRRUP AND TAP CABLE). USE SILICON-BRONZE BOLTING MATERIALS. |
| 6K | CABLE TO CABLE CONNECTOR USED FOR MAIN LINE TAPS TO BRANCH CIRCUITS - ALUMINUM MECHANICAL NON-CRIMP REMOVABLE CONNECTOR, SIZED FOR CABLES. USE SILICON-BRONZE BOLTING MATERIALS. |
| 6L | CABLE TO CABLE CONNECTOR USED FOR MAIN LINE CONNECTIONS - ALUMINUM COMPRESSION CONNECTOR, SIZED FOR CABLES. USE SILICON-BRONZE BOLTING MATERIALS. |
| 6M | SUSPENSION INSULATOR - CLEVIS TYPE, STEEL HARDWARE, ANSI C29.2, CLASS 52-9, 2 REQUIRED FOR 13.2KV SERVICE. OTHER INSULATOR ARRANGEMENTS SUITABLE FOR 15KV SERVICE MAY BE SUBMITTED FOR APPROVAL. |
| 6O | STRAIGHT PIN/INSULATOR/ASSEMBLY. FOR WOOD CROSSARM - FLAT BASE LONG SHANK TYPE, MOUNTING HARDWARE, HOT DIP GALVANIZED; PIN INSULATOR - 14.4KV, GLAZED PORCELAIN, ANSI C29.5, CLASS 55-5, "F" NECK; ARMOR ROD - SIZED AND LENGTH AS REQUIRED BY AERIAL CABLE SIZE/SUPPORT(S); TIE WIRE - TYPE (COPPER OR ALUMINUM), SIZED AND LENGTH AS REQUIRED BY AERIAL CABLE SIZE/SUPPORT(S). SEAL WITH SILICON PUTTY WHEN NOT MOUNTED UPRIGHT. |
| 6P | CORNER ANGLE PIN/INSULATOR/PREFORMED ARMOR ROD/TIE WIRE ASSEMBLY. CORNER ANGLE PIN FOR WOOD CROSSARM - MOUNTING HARDWARE, HOT DIP GALVANIZED; PIN INSULATOR - 14.4KV, GLAZED PORCELAIN, ANSI C29.5, CLASS 55-5, "F" NECK; ARMOR ROD - SIZED AND LENGTH AS REQUIRED BY AERIAL CABLE SIZE/SUPPORT(S); TIE WIRE - TYPE (COPPER OR ALUMINUM), SIZED AND LENGTH AS REQUIRED BY AERIAL CABLE SIZE/SUPPORT(S). SEAL WITH SILICON PUTTY WHEN NOT MOUNTED UPRIGHT. |
| 6Q | POLE TOP PIN/INSULATOR/ASSEMBLY. POLE TOP PIN - C135.22, 15" LENGTH, MOUNTING HARDWARE FOR WOOD POLE, HOT DIP GALVANIZED; PIN INSULATOR - 14.4KV, GLAZED PORCELAIN, ANSI C29.5, CLASS 55-5, "F" NECK; ARMOR ROD - SIZED AND LENGTH AS REQUIRED BY AERIAL CABLE SIZE/SUPPORT(S); TIE WIRE - TYPE (COPPER OR ALUMINUM), SIZED AND LENGTH AS REQUIRED BY AERIAL CABLE SIZE/SUPPORT(S). SEAL WITH SILICON PUTTY WHEN NOT MOUNTED UPRIGHT. |
| 6S | CABLE TERMINATION - SIZED FOR INSULATED CABLE WITH CROSSARM MOUNTING HARDWARE. |

| ITEM TAG | MISC. HARDWARE ITEMS |
|---|---|
| 7A | THIMBLE, FOR STATIC WIRE OR MESSENGER WIRE DEAD-END. |
| 7B | EYE BOLT, OVAL EYE TYPE, FOR DEAD-END ⅝" DIA. WITH ONE SQUARE NUT, ADDITIONAL NUTS, WASHERS, AND LENGTH AS REQUIRED. |
| 7C | GUY GRIP FOR STATIC WIRE, PREFORMED WIRE TYPE. |
| 7D | COMMUNICATION (DCS) CABLE LASHED TO ⅜" MESSENGER. |
| 7E | #2 AWG BARE COPPER. |
| 7F | LASHING WIRE CLIP, SIZE AS REQUIRED. |
| 7G | CLAMP, SUSPENSION, FOR ⅜" MESSENGER. |

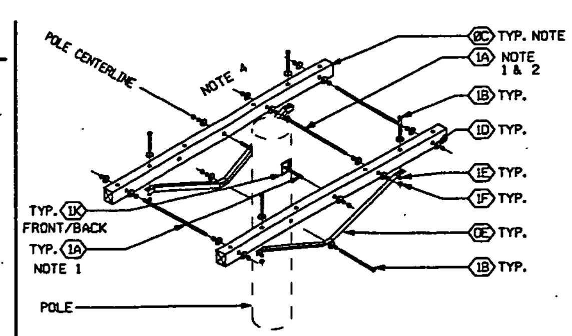


NOTES

1. PROVIDE ADEQUATE LENGTH OF THREAD TO FACILITATE THE ADDITION OF FUTURE EYENUTS ON END OF BOLT.
2. PROVIDE ITEM 1A WITH REQUIRED HARDWARE WHEN "OFFSET" IS NEEDED.
3. 0D REPLACES 0C WHERE NOTED. USE 4 CROSSARMS (ADJUST LENGTH OF 1A WHERE NOTED.
4. USE STANDARD CROSSARM DRILL HOLE SPACINGS.

DETAIL 1 E02028
CROSSARMS & MOUNTING ITEMS
NTS

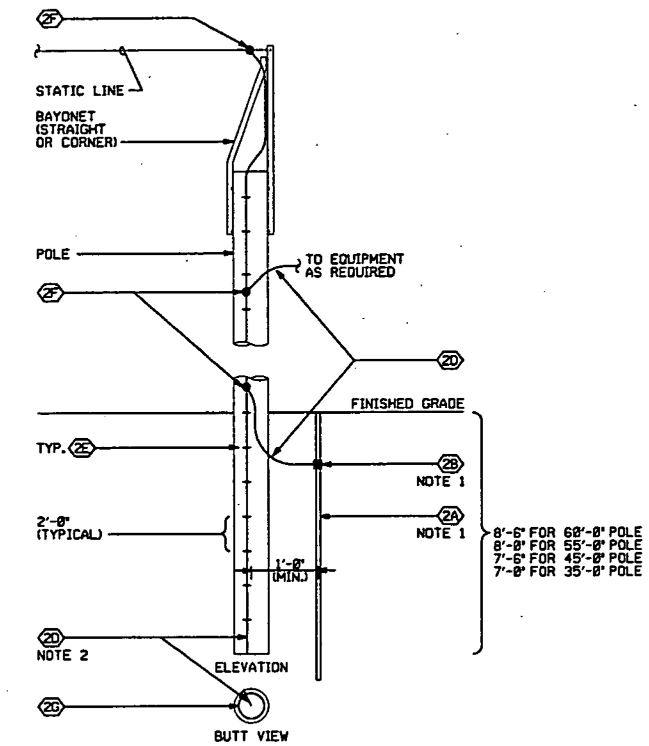


NOTES

1. INSTALL ITEMS 2A & 2B ONLY WHEN CALLED OUT ON THE POLE ELEVATION.
2. LOCATE ITEM 2D FOR MAXIMUM CLEARANCE TO NEAREST 13.2KV BARE AERIAL CONDUCTOR(S). ALWAYS LOCATE ON OPPOSITE SIDE OF POLE FROM OFF-CENTER MIDDLE PHASE FEATURES.

DETAIL 12 E02028
POLE GROUNDING SYSTEM
NTS

LEGEND:

XX - AERIAL MATERIAL OR EQUIPMENT

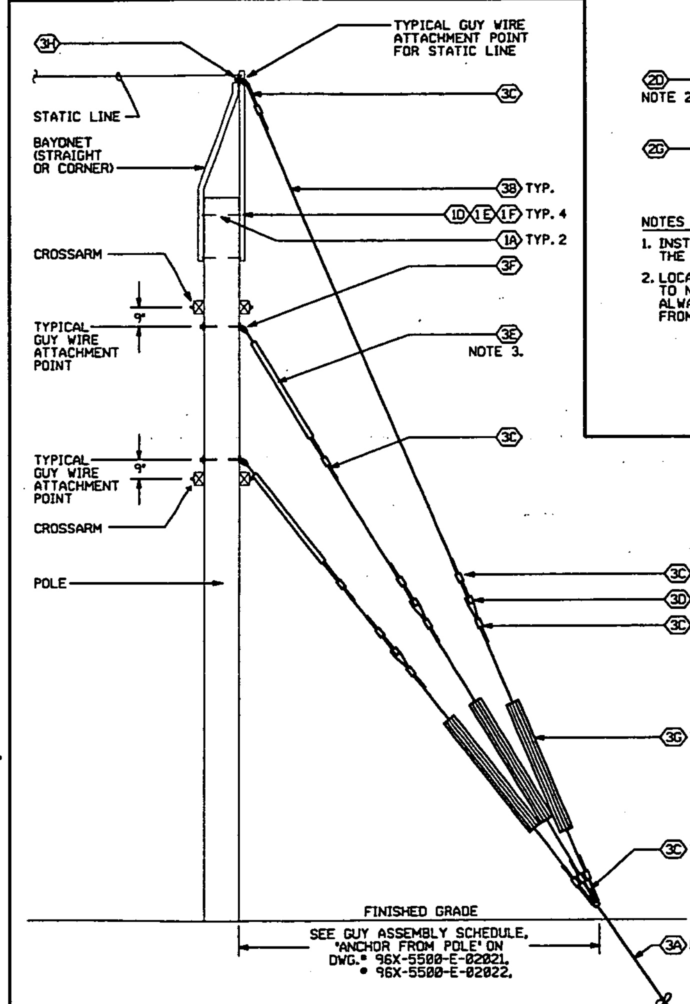


DETAIL 13 E02028
GUYING SYSTEM
NTS

NOTES

1. INSTALL SOIL ANCHORS ACCORDING TO MANUFACTURER'S INSTRUCTIONS. FOR REQUIRED PULLOUT SOIL, ASSUME MINIMUM BLOW COUNT OF 10. (ASTM D1586).
2. PRIOR TO INSTALLATION OF EARTH ANCHORS, VERIFY LOCATION OF NEARBY UNDERGROUND UTILITIES AND PUSH SMALL DIAMETER STEEL SOIL PROBE THROUGH AREA TO VERIFY THAT NO UNDERGROUND OBSTRUCTIONS ARE PRESENT.
3. INSTALL GUY STRAIN INSULATORS (FIBERGLASS ROD TYPE) TO MAINTAIN LINE TO GROUND CLEARANCE TO ANY CONDUCTIVE PART OF THE GUY ASSEMBLY. USE MINIMUM 4 FOOT INSULATOR, IN SERIES IF REQUIRED.

| REF. DWG NO. | DRAWING TITLE |
|---|---|
| 95X-5500-X-02002 | DRAWING INDEX |
| 95X-5500-E-02021 | ELEC. 13.2 KV DISTRIBUTION & COMM. PLAN |
| 95X-5500-E-02022 | ELEC. 13.2 KV DISTRIBUTION & COMM. PLAN |
| 95X-5500-E-02024 | ELECTRICAL ELEVATIONS, SECTIONS AND DETAILS |
| 95X-5500-E-02025 | ELECTRICAL ELEVATIONS, SECTIONS AND DETAILS |
| 95X-5500-E-02026 | ELECTRICAL ELEVATIONS, SECTIONS AND DETAILS |
| 95X-5500-E-02027 | ELECTRICAL SECTIONS AND DETAILS |
| 95X-5500-E-02028 | ELECTRICAL MATERIAL LIST AND STANDARD DETAILS |

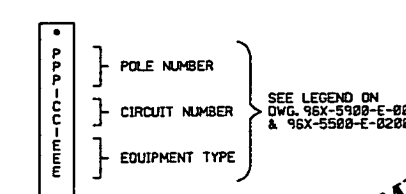


DETAIL 15 E02028
SWITCH NAMEPLATE LETTERING
NTS

PRELIMINARY

000024

| NO. | REVISIONS | DATE | DWN. BY | APPD. | NO. | REVISIONS | DATE | DWN. BY | APPD. | REF. DWG. NO. |
|---|---|---|---|---|---|---|---|---|---|---|
| | | | | | A | ISSUED FOR ENGINEERING REVIEW | 3-30 | GES | | 95X-5500-X-02002 |

NOTE: FLUOR FERNALD CADD DRAWING. DO NOT REVISE MANUALLY.

CONFIGURATION MANAGEMENT DRAWING
SYSTEMS, STRUCTURES OR COMPONENTS DEPICTED ON THIS DRAWING ARE UNDER CONFIGURATION MANAGEMENT CONTROL. SEE NOTES.
COGNIZANT ENGINEER DATE

| APPROVALS | | | |
|---|---|---|---|
| | | SAFETY ENG. | |
| CIVIL & STR. | | MAINTENANCE | |
| ELECTRICAL | | FIRE PROTECT. | |
| ENGINEER | | WASTE MANAGE | |
| INSTRUMENT | | SECURITY | |
| MECHANICAL | | PROJECTS | |
| CHECKED | | | |
| APPROVED | | | |

Fernald Environmental Management Project
FLUOR FERNALD, INC.
U.S. DEPARTMENT OF ENERGY

ARWWP SITE
WASTE STORAGE AREA EXTRACTION SYSTEM PHASE I, AND SFES SUPPLEMENTAL WELL
ELECTRICAL
MATERIAL LIST AND STANDARD DETAILS
RES 42II
DATE FEB. 7, 2001
DRAWN G. SCHWARZMAN
95X-5500-E-02028 A

FILE NAME: /res42II/95xe2028.dgn

FF5.DGN 3/22/00

95xe2028.m schw0542 Tuesday April 10 2001 at 10:22:05 AM EDT

1. "XX" REPRESENTS THE CORRESPONDING EXTRACTION WELL HOUSE NUMBER.

3671

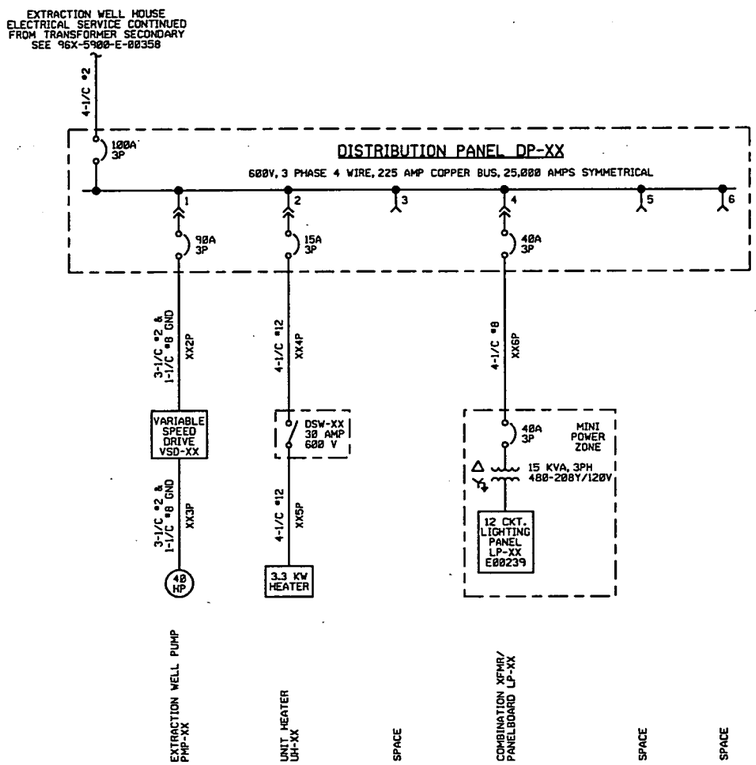


SINGLE LINE CONFIGURATION FOR EXTRACTION WELL HOUSES 25, 26, 27 AND 28

EQUIPMENT NAME : UNIT HEATER UH-XX

EQUIPMENT NO. : UH-XX

PANEL SCH'D DWG NO.: E02031

PLAN DWG NO. : E02038

PREFIX WIRE NUMBERS WITH UH-XX

INTERCONNECTION DIAGRAM : BY VENDOR

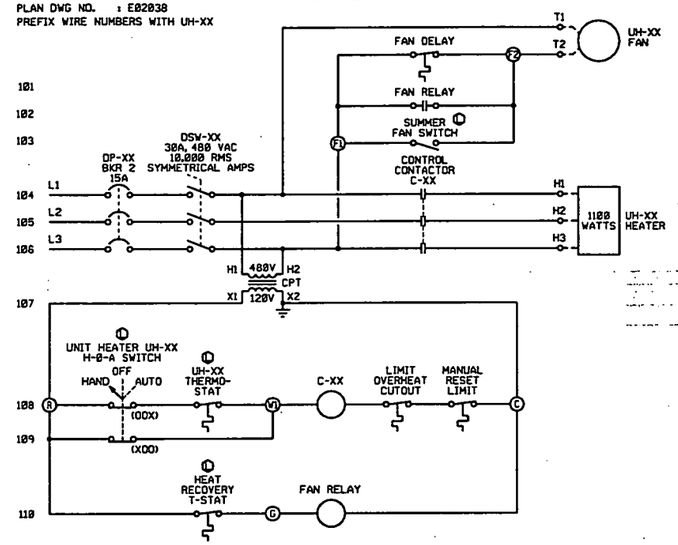


| REF DWG NO. | DRAWING TITLE |
|---|---|
| 95X-5500-X-02002 | DRAWING INDEX |
| 95X-5500-E-02017 | SYMBOLS AND LEGEND |
| 96X-5900-E-00358 | SINGLE LINE DIAGRAM - 13.2 KV FEEDERS |
| 95X-5500-E-02021 | 13.2 KV DISTRIBUTION & COMMUNICATION PLAN |
| 95X-5500-E-02038 | 480/120V POWER, INSTRUMENT, AND LIGHTING PLAN - WELL HOUSE AND VALVE HOUSE |
| 95X-5500-E-02033 | CABLE SCHEDULE |
| 95X-5500-E-02031 | PANEL SCHEDULES |
| 95X-5500-N-02045 | INTERCONNECTION - WELL HOUSE DCS PCS |

PRELIMINARY

000025

| NO. | REVISIONS | DATE | DWN. BY | APPD. | NO. | REVISIONS | DATE | DWN. BY | APPD. | REF. DWG. NO. |
|---|---|---|---|---|---|---|---|---|---|---|
| | | | | | A | ISSUED FOR ENGINEERING REVIEW | 1-10 | GES | | 95X-5500-X-02002 |

NOTE: FLUOR FERNALD CADD DRAWING. DO NOT REVISE MANUALLY.

CONFIGURATION MANAGEMENT DRAWING — REFERENCE STRUCTURES OR COMPONENTS SHOWN ON THIS DRAWING ARE UNDER CONFIGURATION MANAGEMENT CONTROL. SEE NOTES.

COGNIZANT ENGINEER DATE

APPROVALS: CIVIL & STR., ELECTRICAL, ENGINEER, INSTRUMENT, MECHANICAL, CHECKED, APPROVED; SAFETY ENG., MAINTENANCE, FIRE PROTECT., WASTE MANAGE, SECURITY, PROJECTS

Fernald Environmental Management Project

FLUOR FERNALD, INC.

U.S. DEPARTMENT OF ENERGY

ARWWP — SITE

WASTE STORAGE AREA EXTRACTION SYSTEM
PHASE I, AND SFES SUPPLEMENTAL WELL
ELECTRICAL SINGLE LINE DIAGRAM
NOT TO SCALE

RES 428 — DATE MAR. 5, 2001 — DRAWN C. SCHRAEMAN

95X-5500-E-02030 A

FILE NAME: res428l/95xe2030.dgn

FFSLOGN 3/22/00

95xe2030.m schw0542 Tuesday April 10 2001 at 11:01:30 AM EDT

# DISTRIBUTION PANEL DP-XX

VOLTAGE : 480 VOLTS, 3 PHASE, 4 WIRE
MAIN BKR : 100 AMP
MOUNTING : SURFACE

REMARKS : 1. ALL BREAKERS SHALL BE LOCKABLE IN THE "OFF" POSITION
2. SEE NOTE 1.

MAIN BUS 225 AMP

| DIRECTORY | WATTS LOAD L1 | WATTS LOAD L2 | WATTS LOAD L3 | CKT NO | WIRE SIZE | BKR AMPS | BKR AMPS | WIRE SIZE | CKT NO | WATTS LOAD L1 | WATTS LOAD L2 | WATTS LOAD L3 | DIRECTORY |
|---|---|---|---|---|---|---|---|---|---|---|---|---|---|
| UNIT HEATER UH-XX | 1100 | | | | | | | | | 5882 | | | COMBINATION TRANSFORMER/PANELBOARD LP-XX |
| | | 1100 | | 1 | #12 | 15 | 40 | #8 | 2 | | 5882 | | |
| | | | 1100 | | | | | | | | | 5882 | |
| EXTRACTION WELL PUMP XX | 10.8K | | | | | | | | | | | | SPACE |
| | | 10.8K | | 3 | #2 | 80 | | | 4 | | | | |
| | | | 10.8K | | | | | | | | | | |
| SPACE | | | | | | | | | | | | | SPACE |
| | | | | 5 | | | | | 6 | | | | |
| | | | | | | | | | | | | | |
| SUB-TOTALS | 11.9K L1 | 11.9K L2 | 11.9K L3 | NEUTRAL BUS | | | | | | 5882 L1 | 5882 L2 | 5882 L3 | SUB-TOTALS |

TOTAL WATTS L1 : 17.8K TOTAL WATTS L2 : 17.8K TOTAL WATTS L3 : 17.8K TOTAL WATTS : 53.4K

# LIGHTING PANEL LP-XX

VOLTAGE : 208Y/120 VOLT, 3 PHASE, 4 WIRE
MAIN BKR : 50 AMP
MOUNTING : COMBINATION TRANSFORMER/PANEL

REMARKS : 1. * INDICATES GFCI, ** INDICATES 30MA GFEP
2. SEE NOTE 1.

MAIN BUS : 100 AMP

| DIRECTORY | WATTS LOAD L1 | WATTS LOAD L2 | WATTS LOAD L3 | CKT NO | WIRE SIZE | BKR AMPS | BKR AMPS | WIRE SIZE | CKT NO | WATTS LOAD L1 | WATTS LOAD L2 | WATTS LOAD L3 | DIRECTORY |
|---|---|---|---|---|---|---|---|---|---|---|---|---|---|
| RECEPTACLES | 900 | | | 1 | *12 | 20 | 20 | *12 | 2 | 80 | | | INSTRUMENT POWER FIT (N02071) & PCSXX |
| LIGHTS - INSIDE | | 118 | | 3 | *12 | 20 | | | 4 | | | | SPACE |
| LIGHTS - OUTSIDE & EXIT | | | 33 | 5 | *12 | 20 | 20 | *12 | 6 | | | 38 | EXHAUST FAN EF-XX |
| SPACE | | | | 7 | | 20 | | | 8 | | | | SPACE |
| SPACE | | | | 9 | | 20 | | | 10 | | | | SPACE |
| SPACE | | | | 11 | | 20 | | | 12 | | | | SPACE |
| SUB-TOTALS | 900 L1 | 118 L2 | 33 L3 | NEUTRAL BUS | | | | | | 80 L1 | 0 L2 | 38 L3 | SUB-TOTALS |

TOTAL WATTS L1 : 980 TOTAL WATTS L2 : 118 TOTAL WATTS L3 : 71 TOTAL WATTS : 1169

1. "XX" REPRESENTS THE CORRESPONDING EXTRACTION WELL HOUSE NUMBER.

3671

EQUIPMENT NAME : WELL HOUSE XX EXHAUST FAN EF-XX (SEE NOTE 1 (TYPICAL))
EQUIPMENT NO. : EF-XX
S/L DWG NO. : E-02030
PLAN DWG NO. : E-02031
PANEL SCH'D DWG NO.: E-02031

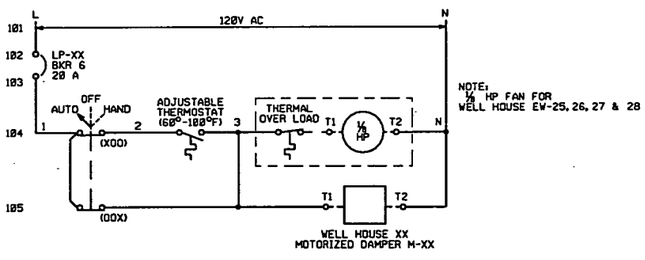


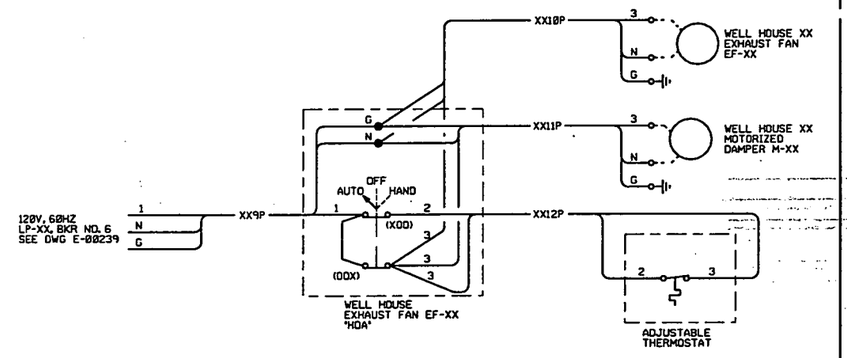


WELL HOUSE EXHAUST FAN EF-XX
INTERCONNECTION DIAGRAM

| REF DWG NO. | DRAWING TITLE |
|---|---|
| 95X-5500-X-02002 | DRAWING INDEX |
| 95X-5500-E-02017 | SYMBOLS AND LEGEND |
| 96X-5900-E-00358 | SINGLE LINE DIAGRAM - 13.2 KV FEEDERS |
| 95X-5500-E-02021 | 13.2 KV DISTRIBUTION & COMMUNICATION PLAN |
| 95X-5500-E-02038 | 480/120V POWER, INSTRUMENT, AND LIGHTING PLAN - WELL HOUSE AND VALVE HOUSE |
| 95X-5500-E-02033 | CABLE SCHEDULE |
| 95X-5500-E-02031 | PANEL SCHEDULES |
| 95X-5500-N-02045 | INTERCONNECTION - WELL HOUSE DCS PCS |

POLE MOUNTED TRANSFORMER CONNECTION

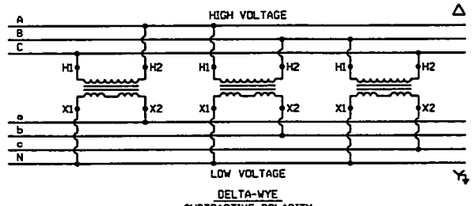


DELTA-WYE
SUBTRACTIVE POLARITY

| SINGLE PHASE TRANSFORMER JUMPER WIRE SIZING TABLE | | | | |
|---|---|---|---|---|
| TRANSFORMER KVA | PRIMARY AMPS | SECONDARY AMPS | PRIMARY WIRE SIZE | SECONDARY WIRE SIZE |
| 25 | 3.28 | 98.21 | #2 | #4 |
| | | | | |

NOTE : INSTALLER SHALL CONFIRM DESIGNATIONS WITH VENDOR SUPPLIED INFORMATION.

PRELIMINARY

000026

| NO. | REVISIONS | DATE | DWN. BY | APPD. | NO. | REVISIONS | DATE | DWN. BY | APPD. | REF. DWG. NO. |
|---|---|---|---|---|---|---|---|---|---|---|
| | | | | | A | ISSUED FOR ENGINEERING REVIEW | 3-9 | MWD | | 95X-5500-X-02002 |

NOTE: FLUOR FERNALD CADD DRAWING. DO NOT REVISE MANUALLY.

CONFIGURATION MANAGEMENT DRAWING — YES / NO
EXISTING STRUCTURES OR COMPONENTS DEPICTED ON THIS DRAWING ARE UNDER CONFIGURATION MANAGEMENT CONTROL. SEE NOTES.
COGNIZANT ENGINEER DATE

| APPROVALS | | | |
|---|---|---|---|
| CIVIL & STR. | | SAFETY ENG. | |
| ELECTRICAL | | MAINTENANCE | |
| ENGINEER | | ERG. PROTECT. | |
| INSTRUMENT | | WASTE MANAGE | |
| MECHANICAL | | SECURITY | |
| | | PROJECTS | |
| CHECKED | | | |
| APPROVED | | | |

Fernald Environmental Management Project
FLUOR FERNALD, INC.
U.S. DEPARTMENT OF ENERGY

ARWWP — SITE
WASTE STORAGE AREA EXTRACTION SYSTEM
PHASE I, AND SFES SUPPLEMENTAL WELL
ELECTRICAL PANEL SCHEDULES & DIAGRAMS
ELEMENTARY AND INTERCONECTION

RES 428 — DATE MAR. 5, 2001 — DRAWN M.W.DERROUGH — 95X-5500-E-02031 — A

FILE NAME: res428/95xe2031.dgn

95xe2031.m schw0542 Tuesday April 10 2001 at 11:59:03 AM EDT

3671

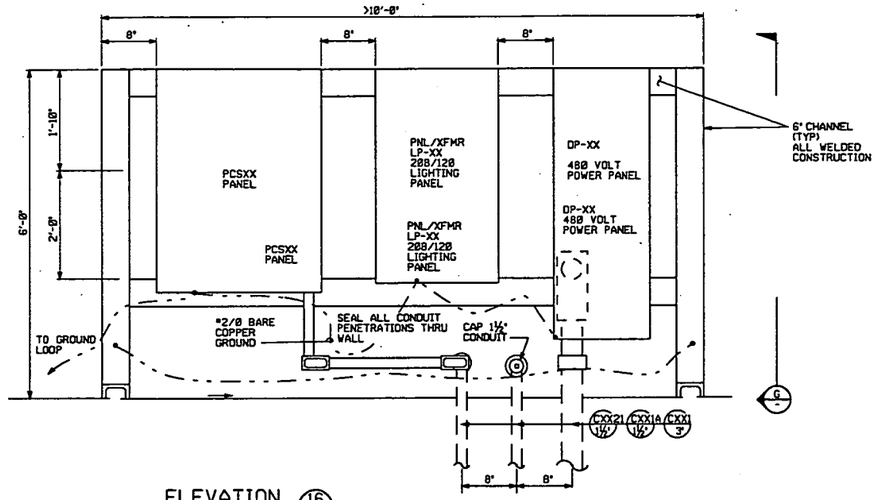


ELEVATION 16 E02023
SWITCHRACK
NTS
REQUIRED IN EACH WELL HOUSE

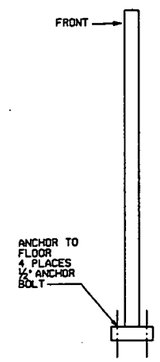


VIEW G -
SIDE VIEW
NTS

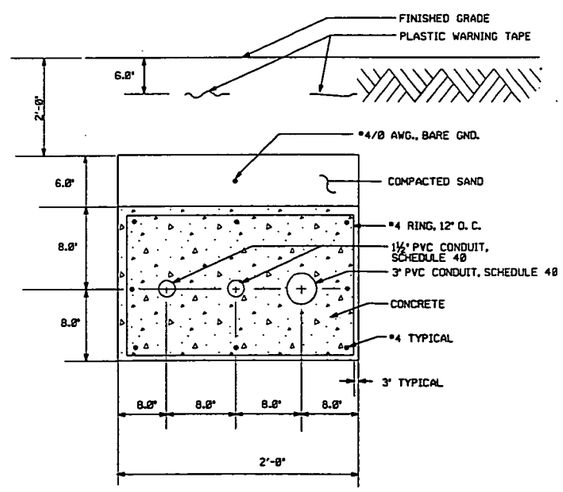


SECTION B E02023
NTS

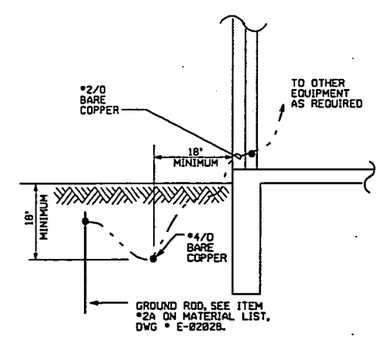


DETAIL 4 E02038
NTS

| REF DWG NO. | DRAWING TITLE |
|---|---|
| 95X-5500-X-02002 | DRAWING INDEX |
| 95X-5500-E-02017 | SYMBOLS AND LEGEND |
| 96X-5900-E-00358 | SINGLE LINE DIAGRAM - 13.2 KV FEEDERS |
| 95X-5500-E-02021 | 13.2 KV DISTRIBUTION & COMMUNICATION PLAN |
| 95X-5500-E-02038 | 480/120V POWER, INSTRUMENT, AND LIGHTING PLAN - WELL HOUSE AND VALVE HOUSE |
| 95X-5500-E-02033 | CABLE SCHEDULE |
| 95X-5500-E-02031 | PANEL SCHEDULES |
| 95X-5500-N-02045 | INTERCONNECTION - WELL HOUSE DCS PCS |

PRELIMINARY

000027

| NO. | REVISIONS | DATE | DWN. BY | APPD. | NO. | REVISIONS | DATE | DWN. BY | APPD. | REF. DWG. NO. |
|---|---|---|---|---|---|---|---|---|---|---|
| | | | | | A | ISSUED FOR ENGINEERING REVIEW | 3-01 | MWD | | 95X-5500-X-02002 |

NOTE: FLUOR FERNALD CADD DRAWING. DO NOT REVISE MANUALLY.

CONFIGURATION MANAGEMENT DRAWING
EXISTING STRUCTURES OR COMPONENTS MODIFIED BY THIS DRAWING. SEE NOTES. SEE NOTES.
COGNIZANT ENGINEER DATE

| APPROVALS | | | |
|---|---|---|---|
| CIVIL & STR. | | SAFETY ENG. | |
| ELECTRICAL | | MAINTENANCE | |
| ENGINEER | | FIRE PROTECT. | |
| INSTRUMENT | | WASTE MANAGE. | |
| MECHANICAL | | SECURITY | |
| | | PROJECTS | |
| CHECKED | | | |
| APPROVED | | | |

Fernald Environmental Management Project
FLUOR FERNALD, INC.
U.S. DEPARTMENT OF ENERGY

ARWWP SITE
WASTE STORAGE AREA EXTRACTION SYSTEM
PHASE I, AND SFES SUPPLEMENTAL WELL
ELECTRICAL ELEVATIONS, SECTIONS & DETAILS
NOT TO SCALE

RES 428
DATE MAR. 5, 2001
DRAWN M.W.DERROUGH
95X-5500-E-02032 A

FFS.DGN 3/22/00

FILE NAME: res428/95xe2032.dgn

95xe2032.m schw0542 Tuesday April 10 2001 at 12:55:23 PM EDT

# CABLE SCHEDULE

| CABLE NO | FROM | TO | CONDUCTOR NUMBER | CONDUCTOR SIZE | CONDUCTOR MATL. | CONDUCTOR INSUL. | CONDUCTOR FUNCTION | WIRE TERMINATIONS 1 | 2 | 3 | 4 | 5 | 6 | 7 | 8 | 9 | 10 | 11 | 12 | ROUTING | REF DWG | REMARKS |
|---|---|---|---|---|---|---|---|---|---|---|---|---|---|---|---|---|---|---|---|---|---|---|
| XX1P | TRANSFORMER ZZZ | WELL HOUSE DISTRIBUTION PANEL DP-XX | 4-1/C | #2 AWG | CU | 600V | 480V POWER | ZZZ -L1 | ZZZ -L2 | ZZZ -L3 | ZZZ -GND | | | | | | | | | CXX1 | SEE REF DWG. BLOCK | NOTE 4 |
| XX2P | WELL HOUSE DISTRIBUTION PANEL DP-XX | VARIABLE SPEED DRIVE VSD-XX | 3-1/C 1-1/C | #2 AWG #8 GND | CU | 600V | 480V POWER | VSD-XX -L1 | VSD-XX -L2 | VSD-XX -L3 | VSD-XX -GND | | | | | | | | | CXX2 | " " | NOTE 5 |
| XX3P | VARIABLE SPEED DRIVE VSD-XX | EXTRACTION WELL PUMP MOTOR PMP-XX | 3-1/C 1-1/C | #2 AWG #8 GND | CU | 600V | 480V POWER | PMP-XX -L1 | PMP-XX -L2 | PMP-XX -L3 | PMP-XX -GND | | | | | | | | | CXX3 | " " | NOTE 6 |
| XX4P | WELL HOUSE DISTRIBUTION PANEL DP-XX | DISCONNECT SWITCH DSW-XX | 4-1/C | #12 AWG | CU | 600V | 480V POWER | DSW-XX -L1 | DSW-XX -L2 | DSW-XX -L3 | DSW-XX -GND | | | | | | | | | CXX4 | " " | NOTE 7 |
| XX5P | DISCONNECT SWITCH DSW-XX | UNIT HEATER UH-XX | 4-1/C | #12 AWG | CU | 600V | 480V POWER | UH-XX -L1 | UH-XX -L2 | UH-XX -L3 | UH-XX -GND | | | | | | | | | CXX5 | " " | NOTE 8 |
| XX6P | WELL HOUSE DISTRIBUTION PANEL DP-XX | COMBINATION TRANSFORMER/ PANELBOARD LP-XX | 4-1/C | #8 AWG | CU | 600V | 480V POWER | LP-XX -L1 | LP-XX -L2 | LP-XX -L3 | LP-XX -GND | | | | | | | | | CXX6 | " " | NOTE 9 |
| XX7P | COMBINATION TRANSFORMER/ PANELBOARD LP-XX, CKT. 2 | INSTRUMENT POWER TO PCS-XX | 3-1/C | #12 AWG | CU | 600V | 120V POWER | L | N | GND | | | | | | | | | | CXX7 | " " | |
| XX8P | COMBINATION TRANSFORMER/ PANELBOARD LP-XX, CKT. 2 | INSTRUMENT POWER TO FITA | 3-1/C | #12 AWG | CU | 600V | 120V POWER | L | N | GND | | | | | | | | | | CXX8 | " " | |
| XX9P | COMBINATION TRANSFORMER/ PANELBOARD LP-XX, CKT. 6 | EXHAUST FAN EF-XX HAND-OFF-AUTO SWITCH | 3-1/C | #12 AWG | CU | 600V | 120V POWER | EF-XX -1 | EF-XX -N | EF-XX -GND | | | | | | | | | | CXX9 | " " | |
| XX10P | EXHAUST FAN EF-XX HAND-OFF-AUTO SWITCH | EXHAUST FAN EF-XX MOTOR | 3-1/C | #12 AWG | CU | 600V | 120V POWER | EF-XX -3 | EF-XX -N | EF-XX -GND | | | | | | | | | | CXX10 | " " | |
| XX11P | EXHAUST FAN EF-XX HAND-OFF-AUTO SWITCH | EXHAUST FAN EF-XX MOTORIZED DAMPER M-XX | 3-1/C | #12 AWG | CU | 600V | 120V POWER | M-XX -3 | M-XX -N | M-XX -GND | | | | | | | | | | CXX11 | " " | |
| XX12P | EXHAUST FAN EF-XX HAND-OFF-AUTO SWITCH | EXHAUST FAN EF-XX ADJUSTABLE THERMOSTAT | 2-1/C | #12 AWG | CU | 600V | 120V POWER | T -2 | T -3 | | | | | | | | | | | CXX12 | " " | |

1. "XX" REPRESENTS THE CORRESPONDING EXTRACTION WELL HOUSE NUMBER.
2. "ZZZ" REPRESENTS THE CORRESPONDING POLE MOUNTED TRANSFORMER NUMBER FROM WHICH CABLE IS CONNECTED TO. SEE 95X-5500-E-00358 SINGLE LINE FOR CLARITY.
3. NOT USED.
4. CABLE ROUTING FROM XFMR SECONDARY TO WEATHERHEAD BELOW XFMR, TO CONDUIT UNDERGROUND, TO DISTRIBUTION PANEL.
5. CABLE NO. REPRESENTS THE FOLLOWING CABLE NUMBERS: 152P, 162P, 172P, 182.
6. CABLE NO. REPRESENTS THE FOLLOWING CABLE NUMBERS: 152P, 162P, 172P, 182.
7. CABLE NO. REPRESENTS THE FOLLOWING CABLE NUMBERS: 152P, 162P, 172P, 182.
8. CABLE NO. REPRESENTS THE FOLLOWING CABLE NUMBERS: 152P, 162P, 172P, 182.
9. CABLE NO. REPRESENTS THE FOLLOWING CABLE NUMBERS: 152P, 162P, 172P, 182.

3671

| REF DWG NO. | DRAWING TITLE |
|---|---|
| 95X-5500-X-02002 | DRAWING INDEX |
| 95X-5500-E-02030 | SINGLE LINE DIAGRAM - 13.2 KV FEEDERS |
| 95X-5500-E-02031 | ELEC. PANEL SCHEDULE & DIAGRAMS |
| 95X-5500-E-02032 | ELEC. ELEVATIONS, SECTIONS AND DETAILS |
| 95X-5500-E-02038 | 480/120V POWER, INSTRUMENT, AND LIGHTING PLAN - |
| 95X-5500-E-02045 | INSTUMENTATION INTERCONNECTION DIAGRAM WELL HOUSE |

PRELIMINARY

000028

| NO. | REVISIONS | DATE | DWN. BY | APPD. | NO. | REVISIONS | DATE | DWN. BY | APPD. | REF. DWG. NO. |
|---|---|---|---|---|---|---|---|---|---|---|
| | | | | | A | ISSUED FOR ENGINEERING REVIEW | 3/30 | NWD | | 95X-5500-X-02002 |

NOTE: FLUOR FERNALD CADD DRAWING. DO NOT REVISE MANUALLY.

CONFIGURATION MANAGEMENT DRAWING

SYSTEMS, STRUCTURES AND COMPONENTS SHOWN ON THIS DRAWING ARE SUBJECT TO CONFIGURATION MANAGEMENT CONTROL. SEE NOTES.

COGNIZANT ENGINEER DATE

APPROVALS

| | | | |
|---|---|---|---|
| CIVIL & STR. | | SAFETY ENG. | |
| ELECTRICAL | | MAINTENANCE | |
| ENGINEER | | FIRE PROTECT. | |
| INSTRUMENT | | WASTE MANAGE | |
| MECHANICAL | | SECURITY | |
| | | PROJECTS | |
| CHECKED | | | |
| APPROVED | | | |

Fernald Environmental Management Project

FLUOR FERNALD, INC.

U.S. DEPARTMENT OF ENERGY

ARWWP SITE

WASTE STORAGE AREA EXTRACTION SYSTEM PHASE I, AND SFES SUPPLEMENTAL WELL

ELECTRICAL CABLE SCHEDULE

NOT TO SCALE

RES 429

DATE MAR. 5, 2001

DRAWN M.R.DERROUGH

95X-5500-E-02033 A

FILE NAME: res421/95xe2033.dgn

FFS.DGN 3/21/00

95xe2033.m schw0542 Tuesday April 10 2001 at 03:40:14 PM EDT

# CABLE SCHEDULE

| CABLE NO | FROM | TO | CONDUCTOR NUMBER | CONDUCTOR SIZE | CONDUCTOR MATL. | CONDUCTOR INSUL | CONDUCTOR FUNCTION | WIRE TERMINATIONS 1 | 2 | 3 | 4 | 5 | 6 | 7 | 8 | 9 | 10 | 11 | 12 | ROUTING | REF DWG | REMARKS |
|---|---|---|---|---|---|---|---|---|---|---|---|---|---|---|---|---|---|---|---|---|---|---|
| 10201 | AWWT DCS | PCS-26 | 2/BNDL | 62.5/125 MULTIMOD | FIBER OPTIC | | COMM | 1 | 2 | | | | | | | | | | | NOTE 19 | SEE REF DWG. BLOCK | FIELD ROUTE CABLE VIA EXISTING POLES NEAR BLDG 51 TO POLE *684 |
| 10211 | PCS-26 | PCS-27 | 2/BNDL | 62.5/125 MULTIMOD | FIBER OPTIC | | COMM | 1 | 2 | | | | | | | | | | | NOTE 20 | • • | BELDEN NO. 225702 OR EQUAL |
| 10221 | PCS-28 | PCS-28 | 2/BNDL | 62.5/125 MULTIMOD | FIBER OPTIC | | COMM | 1 | 2 | | | | | | | | | | | NOTE 21 | • • | BELDEN NO. 225702 OR EQUAL |
| 3C-30 | TAP 3C @ POLE *672 | DEADEND TERMINATION @ POLE *677 | 3-1/C | *2 AWG | ASCR | BARE | 13.2KV POWER | F3C -L1 | F3C -L2 | F3C -L3 | | | | | | | | | | C483, C581 | SEE REF DWG. BLOCK | NOTE 4 |
| 3C-31 | TAP 3C @ POLE *677 | FUSED CUTOUT FC-677 (POLE *677) | 3-1/C | *2 AWG | ASCR | BARE | 13.2KV POWER | F3C -L1 | F3C -L2 | F3C -L3 | | | | | | | | | | | • • | NOTE 4 |
| 3C-32 | FUSED CUTOUT FC-677 (POLE *677) | TRANSFORMER T-677 (POLE *677) | 3-1/C | *2 AWG | ASCR | BARE | 13.2KV POWER | F3C -L1 | F3C -L2 | F3C -L3 | | | | | | | | | | | • • | |
| 3C-33 | TAP 3C @ POLE *675 | DEADEND TERMINATION @ POLE *674 | 3-1/C | *2 AWG | ASCR | BARE | 13.2KV POWER | F3C -L1 | F3C -L2 | F3C -L3 | | | | | | | | | | | • • | NOTE 4 |
| 3C-34 | TAP 3C @ POLE *674 | FUSED CUTOUT FC-674 (POLE *674) | 3-1/C | *2 AWG | ASCR | BARE | 13.2KV POWER | F3C -L1 | F3C -L2 | F3C -L3 | | | | | | | | | | | • • | NOTE 4 |
| 3C-35 | FUSED CUTOUT FC-674 (POLE *674) | TRANSFORMER T-674 (POLE *674) | 3-1/C | *2 AWG | ASCR | BARE | 13.2KV POWER | F3C -L1 | F3C -L2 | F3C -L3 | | | | | | | | | | | • • | |
| 2C-30 | TAP 2C @ POLE *574 | DEADEND TERMINATION @ POLE *656 | 3-1/C | *2 AWG | ASCR | BARE | 13.2KV POWER | F2 -L1 | F2 -L2 | F2 -L3 | | | | | | | | | | C483, C581 | SEE REF DWG. BLOCK | NOTE 4 |
| 2C-31 | TAP 2C @ POLE *656 | FUSED CUTOUT FC-656 (POLE *656) | 3-1/C | *2 AWG | ASCR | BARE | 13.2KV POWER | F2 -L1 | F2 -L2 | F2 -L3 | | | | | | | | | | | • • | |
| 2C-32 | FUSED CUTOUT FC-656 (POLE *656) | TRANSFORMER T-656 (POLE *656) | 3-1/C | *2 AWG | ASCR | BARE | 13.2KV POWER | F2 -L1 | F2 -L2 | F2 -L3 | | | | | | | | | | | • • | |
| 2C-33 | TAP 2C @ POLE *537 | DEADEND TERMINATION @ POLE *684 | 3-1/C | *2 AWG | ASCR | BARE | 13.2KV POWER | F2 -L1 | F2 -L2 | F2 -L3 | | | | | | | | | | | • • | NOTE 4 |
| 2C-34 | TAP 2C @ POLE *684 | FUSED CUTOUT FC-684 (POLE *684) | 3-1/C | *2 AWG | ASCR | BARE | 13.2KV POWER | F2 -L1 | F2 -L2 | F2 -L3 | | | | | | | | | | | • • | |
| 2C-35 | FUSED CUTOUT FC-684 (POLE *684) | TRANSFORMER T-684 (POLE *684) | 3-1/C | *2 AWG | ASCR | BARE | 13.2KV POWER | F2 -L1 | F2 -L2 | F2 -L3 | | | | | | | | | | | • • | |

1. "XX" REPRESENTS THE CORRESPONDING EXTRACTION WELL HOUSE NUMBER.
2. FEA (ULTRASONIC TRANSMITTER) AND FEB (ULTRASONIC RECEIVER) MAKE UP THE FLOW ELEMENT FOR FITA.
3. FOR INSTRUMENT LOOP NUMBER MATRIX SEE DRAWING 95X-5900-N-00271.
4. INSTALL PER MANUFACTURERS INSTRUCTIONS
5. STARTING @ BUILDING 51, OVERHEAD VIA EXISTING POLES TO POLE *524(*), OVERHEAD TO C1521 @ POLE *631(*), TO PSC-15.
6. STARTING @ PCS-15 C1521 UNDERGROUND TO POLE*631(*), OVERHEAD TO C1721 @ POLE *655, TO PCS-17.
7. STARTING @ PCS-17 C1721 UNDERGROUND TO POLE*655, OVERHEAD TO C572@ POLE *635(*), TO PCS-VHI.
8. STARTING @ PCS-VHI C572 UNDERGROUND TO POLE*635(*), OVERHEAD TO C1421 @ POLE *31A, TO PCS-14.
9. STARTING @ PCS-14 C1421 UNDERGROUND TO POLE*662, OVERHEAD TO C1321 @ POLE *36A(*), TO PCS-13.
10. STARTING @ PCS-13 C1321 UNDERGROUND TO POLE*36A(*), OVERHEAD TO C1621 @ POLE *636(*), TO PCS-16.
11. STARTING @ PCS-16 C1621 UNDERGROUND TO POLE *636(*). OVERHEAD TO C2221 @ POLE *641 TO PCS-22.
12. STARTING @ BUILDING 51, OVERHEAD VIA EXISTING POLES TO POLE *524(*), OVERHEAD TO C2121 @ POLE *576, TO PSC-21.
13. STARTING @ PCS-21 C2121 UNDERGROUND TO POLE*575, OVERHEAD TO C2021 @ POLE *579, TO PCS-20.
14. STARTING @ PCS-20 C2021 UNDERGROUND TO POLE*579, OVERHEAD TO C1921 @ POLE *583, TO PCS-19.
15. REROUTE EXISTING CABLE 10131 STARTING @ PCS-19 C1921 UNDERGROUND TO POLE*583, OVERHEAD TO C2321 @ POLE *587, TO PCS-23.
16. POLE NUMBERS FOLLOWED BY AN "(*)" ARE EXISTING OR ORIGINATE THEIR NUMBERS FROM THE "WASTE UNITS REMEDIATION - SOUTHERN WASTE UNITS - SITE PREPARATION PACKAGE" AND ARE TO BE CONSIDERED EXISTING AT THE TIME THIS JOB IS CONSTRUCTED.
17. STARTING @ PCS-23 C2321 UNDERGROUND TO POLE*587, OVERHEAD TO C2421 @ POLE *598, TO PCS-24.
18. STARTING @ PCS-24 C2421 UNDERGROUND TO POLE*598, OVERHEAD TO C1821 @ POLE *586, TO PCS-18.
19. STARTING @ BUILDING 51, OVERHEAD VIA EXISTING POLES TO POLE *684(*), UNDERGROUND TO C2621 @ POLE *684(*), TO PSC-26.
20. STARTING @ PCS-26 C2621 UNDERGROUND TO POLE*684(*), OVERHEAD TO C2721 @ POLE *674, TO PCS-27.
21. STARTING @ PCS-27 C2721 UNDERGROUND TO POLE*684, OVERHEAD TO C2821 @ POLE *677(*), TO PSC-28.

| REF DWG NO. | DRAWING TITLE |
|---|---|
| 95X-5500-X-02002 | DRAWING INDEX |
| 96X-5500-E-00358 | 13.2 KV ARIAL DISTRIBUTION SINGLE LINE DIAGRAM |
| 95X-5500-E-02021 | ELEC.13.2 KV DISTRIBUTION & COMM. PLAN |
| 95X-5500-E-02022 | 13.2.KV. DISTRIBUTION & COMMUNICATION PLAN |
| 95X-5500-E-02038 | 480/120 POWER, INSTUMENT & LIGHTING PLAN |
| 95X-5500-N-00273 | SOUTH FIELD EXTRATION SYSTEM INSTRUMENTATIONCONTROL SYSTEM ARCHITECTURE |
| 95X-5500-N-02045 | INSTRUMENTATION INTERCONNECTION DIAGRAM WELL HOUSE DCS PCS |

PRELIMINARY

000029

| NO. | REVISIONS | DATE | DWN. BY | APPD. | NO. | REVISIONS | DATE | DWN. BY | APPD. | REF. DWG. NO. |
|---|---|---|---|---|---|---|---|---|---|---|
| | | | | | A | ISSUED FOR ENGINEERING REVIEW | 3/9 | MWD | | 95X-5500-X-02002 |

NOTE: FLUOR FERNALD CADD DRAWING. DO NOT REVISE MANUALLY.

CONFIGURATION MANAGEMENT DRAWING — YES / NO. SYSTEMS, STRUCTURES OR COMPONENTS SHOWN ON THIS DRAWING ARE UNDER CONFIGURATION MANAGEMENT CONTROL. SEE NOTES.

COGNIZANT ENGINEER DATE

APPROVALS: CIVIL & STR. / ELECTRICAL / ENGINEER / INSTRUMENT / MECHANICAL / CHECKED / APPROVED / SAFETY ENG. / MAINTENANCE / FIRE PROTECT. / WASTE MANAGE / SECURITY / PROJECTS

Fernald Environmental Management Project

FLUOR FERNALD, INC.

U.S. DEPARTMENT OF ENERGY

ARWWP — SITE

WASTE STORAGE AREA EXTRACTION SYSTEM PHASE I, AND SFES SUPPLEMENTAL WELL ELECTRICAL CABLE SCHEDULE

NOT TO SCALE

RES. 421 — DATE MAR. 5, 2001 — DRAWN M.W.DERROUGH

95X-5500-E-02034 A

FILE NAME: res421/95xe2034.dgn

FFLOGN 3/21/00

95xe2034.m schw0542 Wednesday April 11 2001 at 08:58:33 AM EDT

# CABLE SCHEDULE

| CABLE NO | FROM | TO | CONDUCTOR | | | | | WIRE TERMINATIONS | | | | | | | | | | | | ROUTING | REF DWG | REMARKS |
|---|---|---|---|---|---|---|---|---|---|---|---|---|---|---|---|---|---|---|---|---|---|---|
| | | | NUMBER | SIZE | MATL | INSUL | FUNCTION | 1 | 2 | 3 | 4 | 5 | 6 | 7 | 8 | 9 | 10 | 11 | 12 | | | |
| 1001I | AWWT DCS | PCS-15 | 2/BNDL | 62.5/125 MULTIMOD | FIBER OPTIC | | COMM | 1 | 2 | | | | | | | | | | | NOTE 5 | N-00271, N-00273 E-00244 | FIELD ROUTE CABLE VIA EXISTING POLES NEAR BLDG 51 TO POLE 524 |
| 1002I | PCS-15 | PCS-17 | 2/BNDL | 62.5/125 MULTIMOD | FIBER OPTIC | | COMM | 1 | 2 | | | | | | | | | | | NOTE 6 | N-00271 N-00273, E-00244 | BELDEN NO. 225702 OR EQUAL |
| 1003I | PCS-17 | PCSVH1 | 2/BNDL | 62.5/125 MULTIMOD | FIBER OPTIC | | COMM | 1 | 2 | | | | | | | | | | | NOTE 7 | N-00271 N-00273, E-00244 | BELDEN NO. 225702 OR EQUAL |
| 1004I | PCSVH1 | PCS-14 | 2/BNDL | 62.5/125 MULTIMOD | FIBER OPTIC | | COMM | 1 | 2 | | | | | | | | | | | NOTE 8 | N-00272 N-00273, E-00244 | BELDEN NO. 225702 OR EQUAL |
| 1005I | PCS-14 | PCS-13 | 2/BNDL | 62.5/125 MULTIMOD | FIBER OPTIC | | COMM | 1 | 2 | | | | | | | | | | | NOTE 9 | N-00272 N-00273, E-00244 | BELDEN NO. 225702 OR EQUAL |
| 1006I | PCS-13 | PCS-16 | 2/BNDL | 62.5/125 MULTIMOD | FIBER OPTIC | | COMM | 1 | 2 | | | | | | | | | | | NOTE 10 | N-00271 N-00273, E-00244 | BELDEN NO. 225702 OR EQUAL |
| 1007I | PCS-16 | PCS-22 | 2/BNDL | 62.5/125 MULTIMOD | FIBER OPTIC | | COMM | 1 | 2 | | | | | | | | | | | NOTE 11 | N-00271 N-00273, E00244 | BELDEN NO. 225702 OR EQUAL |
| 1010I | AWWT DCS | PCS-25 | 2/BNDL | 62.5/125 MULTIMOD | FIBER OPTIC | | COMM | 1 | 2 | | | | | | | | | | | NOTE 12 | X-02002 N-02042, N-02045 | FIELD ROUTE CABLE VIA EXISTING POLES NEAR BLDG 51 TO POLE #574 |
| 135I | PCS-25 | PCS-21 | 2/BNDL | 62.5/125 MULTIMOD | FIBER OPTIC | | COMM | 1 | 2 | | | | | | | | | | | NOTE 12A | N-02002 N-02042, N-02045 | BELDEN NO. 225702 OR EQUAL |
| 1011I | PCS-21 | PCS-20 | 2/BNDL | 62.5/125 MULTIMOD | FIBER OPTIC | | COMM | 1 | 2 | | | | | | | | | | | NOTE 13 | N-00271 N-00273, E-00244 | BELDEN NO. 225702 OR EQUAL |
| 1012I | PCS-20 | PCS-19 | 2/BNDL | 62.5/125 MULTIMOD | FIBER OPTIC | | COMM | 1 | 2 | | | | | | | | | | | NOTE 14 | N-00271 N-00273, E-00244 | BELDEN NO. 225702 OR EQUAL |
| 1013I | PCS-19 | PCS-23 | 2/BNDL | 62.5/125 MULTIMOD | FIBER OPTIC | | COMM | 1 | 2 | | | | | | | | | | | NOTE 15 | N-00271 N-00273, E-00244 | BELDEN NO. 225702 OR EQUAL |
| 1020I | FIT001 | PCSVH1 | 1 PAIR | #16 AWG | CU | 600V | ANALOG | + | - | SHLD | | | | | | | | | | C575 | N-00272 E-00245 | |
| 1021I | FE001A (TRANSMITTER) | FIT001 | 1/C COAX | VENDOR | | | ULTRSNC X-MITTR | + | SHLD | | | | | | | | | | | C585 | N-00272 E-00245 | VENDOR CABLE |
| 1022I | FE001B (RECEIVER) | FIT001 | 1/C COAX | VENDOR | | | ULTRSNC RECEIVER | + | SHLD | | | | | | | | | | | C585, C586 | N-00272 E-00245 | VENDOR CABLE |
| 1023I | PIT002 | PCSVH1 | 1 PAIR | #16 AWG | CU | 600V | ANALOG | + | - | SHLD | | | | | | | | | | C575, C579 | N-00272 E-00245 | |
| 1024I | FIT003 | PCSVH1 | 1 PAIR | #16 AWG | CU | 600V | ANALOG | + | - | SHLD | | | | | | | | | | C575, C576 | N-00272 E-00245 | |
| 1025I | FE003A (TRANSMITTER) | FIT003 | 1/C COAX | VENDOR | | | ULTRSNC X-MITTR | + | SHLD | | | | | | | | | | | C587 | N-00272 E-00245 | VENDOR CABLE |
| 1026I | FE003B (RECEIVER) | FIT003 | 1/C COAX | VENDOR | | | ULTRSNC RECEIVER | + | SHLD | | | | | | | | | | | C587, C588 | N-00272 E-00245 | VENDOR CABLE |
| 1027I | FCV001 | PCSVH1 | 1 PAIR | #16 AWG | | | ANALOG | + | - | SHLD | | | | | | | | | | C575, C584 | N-00272 E-00245 | |
| 1028I | PCV002 | PCSVH1 | 1 PAIR | #16 AWG | CU | 600V | ANALOG | + | - | SHLD | | | | | | | | | | C575, C589 | N-00272 E-00245 | |
| XX01I | FIT | PCS-XX | 1 PAIR | #16 AWG | CU | 600V | ANALOG | + | - | SHLD | | | | | | | | | | CXX14 | N-00271 E-00245 | |
| | | | | | | | | | | | | | | | | | | | | | | |
| XX04I | PITA | PCS-XX | 1 PAIR | #16 AWG | CU | 600V | ANALOG | + | - | SHLD | | | | | | | | | | CXX14, CXX17 | N-00271 E-00245 | |
| XX05I | FYA | PCS-XX | 1 PAIR | #16 AWG | CU | 600V | ANALOG | + | - | SHLD | | | | | | | | | | CXX19 | N-00271 E-00245 | |
| | | | | | | | | | | | | | | | | | | | | | | |
| 1001C | ZSH022/ZSL022 | PCSVH1 | 3-1/C | #14 AWG | CU | 600V | DIGITAL | 1 | 2 | 3 | | | | | | | | | | C575, C580 | N-00272 E-00245 | |
| 1002C | ZSH023/ZSL023 | PCSVH1 | 3-1/C | #14 AWG | CU | 600V | DIGITAL | 1 | 2 | 3 | | | | | | | | | | C575, C582 | N-00272 E-00245 | |
| 1003C | ZSH024/ZSL024 | PCSVH1 | 3-1/C | #14 AWG | CU | 600V | DIGITAL | 1 | 2 | 3 | | | | | | | | | | C575, C581 | N-00272 E-00245 | |
| 1004C | ZSH025/ZSL025 | PCSVH1 | 3-1/C | #14 AWG | CU | 600V | DIGITAL | 1 | 2 | 3 | | | | | | | | | | C575, C577, C581 | N-00272 E-00245 | |
| 1006C | ZSH027/ZSL027 | PCSVH1 | 3-1/C | #14 AWG | CU | 600V | DIGITAL | 1 | 2 | 3 | | | | | | | | | | C575, C583 | N-00272 E-00245 | |
| 1008C | ZSH030/ZSL030 | PCSVH1 | 3-1/C | #14 AWG | CU | 600V | DIGITAL | 1 | 2 | 3 | | | | | | | | | | C575, C578 | N-00272 E-00245 | |
| 1009C | FCV001 | PCSVH1 | 2-1/C | #14 AWG | CU | 600V | DIGITAL | 1 | 2 | | | | | | | | | | | C575, C584 | N-00272 E-00245 | (ZSL001) |
| | | | | | | | | | | | | | | | | | | | | | | |
| XX01C | ZSHA/ZSLA | PCS-XX | 3-1/C | #14 AWG | CU | 600V | DIGITAL | 1 | 2 | 3 | | | | | | | | | | CXX14, CXX15 | N-00271 E-00245 | |
| XX02C | ZSHB/ZSLB | PCS-XX | 3-1/C | #14 AWG | CU | 600V | DIGITAL | 1 | 2 | 3 | | | | | | | | | | CXX14, CXX16 | N-00271 E-00245 | |
| XX03C | UNIT HEATER UH-XX | UNIT HEATER UH-XX HAND-OFF-AUTO SWITCH | 3-1/C | #12 AWG | CU | 600V | CONTROL | UH-XX-1 | UH-XX-2 | UH-XX-3 | UH-XX-4 | UH-XX-5 | | | | | | | | CXX18 | E-00245 E-00243 | NOTE 4 |
| | | | | | | | | | | | | | | | | | | | | | | |
| 573C | UNIT HEATER UH-1 | UNIT HEATER UH-1 HAND-OFF-AUTO SWITCH | 3-1/C | #12 AWG | CU | 600V | CONTROL | UH-1-1 | UH-1-2 | UH-1-3 | UH-1-4 | UH-1-5 | | | | | | | | C307, C573 | E-00245 E-00243 | NOTE 4 |
| 574C | UNIT HEATER UH-2 | UNIT HEATER UH-2 HAND-OFF-AUTO SWITCH | 3-1/C | #12 AWG | CU | 600V | CONTROL | UH-2-1 | UH-2-2 | UH-2-3 | UH-2-4 | UH-2-5 | | | | | | | | C309, C574 | E-00245 E-00243 | NOTE 4 |
| | | | | | | | | | | | | | | | | | | | | | | |
| 601C | UNIT HEATER UH-3 | UNIT HEATER UH-3 HAND-OFF-AUTO SWITCH | 3-1/C | #12 AWG | CU | 600V | CONTROL | UH-3-1 | UH-3-2 | UH-3-3 | UH-3-4 | UH-3-5 | | | | | | | | C403, C601 | E-00375 E-00243 | NOTE 4 |
| 1030I | PCS-23 | PCS-24 | 2/BNDL | 62.5/125 MULTIMOD | FIBER OPTIC | | COMM | 1 | 2 | | | | | | | | | | | NOTE 17 | N-00271 N-00273, E-00244 | BELDEN NO. 225702 OR EQUAL |
| 1031I | PCS-24 | PCS-18 | 2/BNDL | 62.5/125 MULTIMOD | FIBER OPTIC | | COMM | 1 | 2 | | | | | | | | | | | NOTE 18 | N-00271 N-00273, E-00244 | BELDEN NO. 225702 OR EQUAL |
| 2C-24 | TAP 2C-3 @ POLE #584 | DEADEND TERMINATION @ POLE # 587 | 3-1/C | #2 AWG | ASCR | BARE | 13.2KV POWER | F1A1-24-L1 | F1A1-24-L2 | F1A1-24-L3 | | | | | | | | | | C403, C601 | E-00375 E-00243 | NOTE 4 |
| 2C-25 | TAP 2C-24 @ POLE 587 | FUSED CUTOUT FC-587 (POLE 587) | 3-1/C | #2 AWG | ASCR | BARE | 13.2KV POWER | F1A1-25-L1 | F1A1-25-L2 | F1A1-25-L3 | | | | | | | | | | | E00244 E00477 | |
| 2C-26 | FUSED CUTOUT FC-587 (POLE 587) | TRANSFORMER T-587 (POLE 587) | 3-1/C | #2 AWG | ASCR | BARE | 13.2KV POWER | F1A1-26-L1 | F1A1-26-L2 | F1A1-26-L3 | | | | | | | | | | | E00244 E00477 | |
| 2C-27 | TAP 2C-3 @ POLE #585 | DEADEND TERMINATION @ POLE # 590 | 3-1/C | #2 AWG | ASCR | BARE | 13.2KV POWER | F1A1-27-L1 | F1A1-27-L2 | F1A1-27-L3 | | | | | | | | | | | E00244 E00477 | NOTE 4 |
| 2C-28 | TAP 2C-27 @ POLE 590 | FUSED CUTOUT FC-590 (POLE 590) | 3-1/C | #2 AWG | ASCR | BARE | 13.2KV POWER | F1A1-28-L1 | F1A1-28-L2 | F1A1-28-L3 | | | | | | | | | | | E00244 E00477 | |
| 2C-29 | FUSED CUTOUT FC-590 (POLE 590) | TRANSFORMER T-590 (POLE 590) | 3-1/C | #2 AWG | ASCR | BARE | 13.2KV POWER | F1A1-29-L1 | F1A1-29-L2 | F1A1-29-L3 | | | | | | | | | | | E00244 E00477 | |

1. "XX" REPRESENTS THE CORRESPONDING EXTRACTION WELL HOUSE NUMBER.
2. FEA (ULTRASONIC TRANSMITTER) AND FEB (ULTRASONIC RECEIVER) MAKE UP THE FLOW ELEMENT FOR FITA.
3. FOR INSTRUMENT LOOP NUMBER MATRIX SEE DRAWING 95X-5900-N-00271.
4. INSTALL PER MANUFACTURERS INSTRUCTIONS
5. STARTING @ BUILDING 51, OVERHEAD VIA EXISTING POLES TO POLE #524(•), OVERHEAD TO C1521 @ POLE #631(•), TO PSC-15.
6. STARTING @ PCS-15 C1521 UNDERGROUND TO POLE#631(•), OVERHEAD TO C1721 @ POLE #655, TO PCS-17.
7. STARTING @ PCS-17 C1721 UNDERGROUND TO POLE#655, OVERHEAD TO C572@ POLE #635(•), TO PCS-VH1.
8. STARTING @ PCS-VH1 C572 UNDERGROUND TO POLE#635(•), OVERHEAD TO C1421 @ POLE #31A, TO PCS-14.
9. STARTING @ PCS-14 C1421 UNDERGROUND TO POLE#662, OVERHEAD TO C1321 @ POLE #36A(•), TO PCS-13.
10. STARTING @ PCS-13 C1321 UNDERGROUND TO POLE#36A(•), OVERHEAD TO C1621 @ POLE #636(•), TO PCS-16.
11. STARTING @ PCS-16 C1621 UNDERGROUND TO POLE #636(•). OVERHEAD TO C2221 @ POLE #641 TO PCS-22.
12. STARTING @ BUILDING 51, OVERHEAD VIA EXISTING POLES TO POLE #524(•), OVERHEAD TO C2521 @ POLE #656, TO PSC-25.

12A. STARTING @ PSC-25 UNDERGROUND TO POLE #656 OVERHEAD TO C2121 @ POLE #576 TO PSC-21.

13. STARTING @ PCS-21 C2121 UNDERGROUND TO POLE#575, OVERHEAD TO C2021 @ POLE #579, TO PCS-20.
14. STARTING @ PCS-20 C2021 UNDERGROUND TO POLE#579, OVERHEAD TO C1921 @ POLE #583, TO PCS-19.
15. REROUTE EXISTING CABLE 1013I STARTING @ PCS-19 C1921 UNDERGROUND TO POLE#583, OVERHEAD TO C2321 @ POLE #587, TO PCS-23.
16. POLE NUMBERS FOLLOWED BY AN "(•)" ARE EXISTING OR ORIGINATE THEIR NUMBERS FROM THE "WASTE UNITS REMEDIATION - SOUTHERN WASTE UNITS - SITE PREPARATION PACKAGE" AND ARE TO BE CONSIDERED EXISTING AT THE TIME THIS JOB IS CONSTRUCTED.
17. STARTING @ PCS-23 C2321 UNDERGROUND TO POLE#587, OVERHEAD TO C2421 @ POLE #590, TO PCS-24.
18. STARTING @ PCS-24 C2421 UNDERGROUND TO POLE#590, OVERHEAD TO C1821 @ POLE #586, TO PCS-18.

3671

| REF DWG NO. | DRAWING TITLE |
|---|---|
| 95X-5500-X-02002 | DRAWING INDEX |
| 95X-5900-N-00273 | SOUTH FIELD EXTRACTION SYSTEM INSTRUMENTATION CONTROL SYSTEM ARCHITECTURE |
| 95X-5500-N-02045 | INSTRUMENTATION INTERCONNECTION DIAGRAM WELL HOUSE DCS PCS |

PRELIMINARY

000030

this file is copied & updated to/res42II/95e00870.dgn

| NO. | REVISIONS | DATE | DWN. BY | APPD. | NO. | REVISIONS | DATE | DWN. BY | APPD. | REF. DWG. NO. |
|---|---|---|---|---|---|---|---|---|---|---|
| | | | | | A | ISSUED FOR ENGINEERING REVIEW | 3-01 | MWD | | 95X-5500-X-02002 |

NOTE: FLUOR FERNALD CADD DRAWING. DO NOT REVISE MANUALLY.

CONFIGURATION MANAGEMENT DRAWING — YES / NO

SYSTEMS, STRUCTURES OR COMPONENTS DEPICTED ON THIS DRAWING ARE UNDER CONFIGURATION MANAGEMENT CONTROL. SEE NOTES.

COGNIZANT ENGINEER DATE

APPROVALS

| | | | |
|---|---|---|---|
| CIVIL & STR. | | SAFETY ENG. | |
| ELECTRICAL | | MAINTENANCE | |
| ENGINEER | | FIRE PROTECT. | |
| INSTRUMENT | | WASTE MANAGE | |
| MECHANICAL | | SECURITY | |
| | | PROJECTS | |
| CHECKED | | | |
| APPROVED | | | |

Fernald Environmental Management Project

FLUOR FERNALD, INC.

U.S. DEPARTMENT OF ENERGY

ARWWP SITE

WASTE STORAGE AREA EXTRACTION SYSTEM PHASE I, AND SFES SUPPLEMENTAL WELL ELECTRICAL CABLE SCHEDULE

NOT TO SCALE

RES 421 DATE MAR. 5, 2001 DRAWN M.W.DERROUGH

95X-5500-E-02035 A

FILE NAME: res42II/95xe2035.dgn

FFS.DGN 3/22/00

95xe2035.m schw0542 Wednesday April 11 2001 at 08:49:03 AM EDT

# CONDUIT SCHEDULE

| CONDUIT NO | FROM | TO | COND SIZE | CONTAINS CABLE(S) | REMARKS |
|---|---|---|---|---|---|
| CXX1 | WEATHERHEAD ON POLE | WELL HOUSE DISTRIBUTION PANEL DP-XX | 3" | XX1P | WELL HOUSE XX CONDUITS |
| CXX1A | STUB-UP AT POLE | STUB-UP BELOW DISTRIBUTION PANEL DP-XX | 1½" | (EMPTY) | |
| CXX2 | WELL HOUSE DISTRIBUTION PANEL DP-XX | VARIABLE SPEED DRIVE VSD-XX | 1½" | XX2P | |
| CXX3 | VARIABLE SPEED DRIVE VSD-XX | EXTRACTION WELL PUMP MOTOR PMP-XX | 1½" | XX3P | |
| CXX4 | WELL HOUSE DISTRIBUTION PANEL DP-XX | DISCONNECT SWITCH DSW-XX | ¾" | XX4P | |
| CXX5 | DISCONNECT SWITCH DSW-XX | UNIT HEATER UH-XX | ¾" | XX5P | |
| CXX6 | WELL HOUSE DISTRIBUTION PANEL DP-XX | COMBINATION TRANSFORMER/ PANELBOARD LP-XX | ¾" | XX6P | |
| CXX7 | COMBINATION TRANSFORMER/ PANELBOARD LP-XX | PCS-XX | ¾" | XX7P | |
| CXX8 | COMBINATION TRANSFORMER/ PANELBOARD LP-XX | FLOW INDICATING TRANSMITTER FIT | ¾" | XX8P | |
| CXX9 | COMBINATION TRANSFORMER/ PANELBOARD LP-XX | EXHAUST FAN EF-XX HAND-OFF-AUTO SWITCH | ¾" | XX9P, XX11P, 1112P | |
| CXX10 | EXHAUST FAN EF-XX HAND-OFF-AUTO SWITCH | EXHAUST FAN EF-XX MOTOR | ¾" | XX10P | |
| CXX11 | TEE IN CXX9 | EXHAUST FAN EF-XX MOTORIZED DAMPER M-XX | ¾" | XX11P | |
| CXX12 | TEE IN CXX9 | EXHAUST FAN EF-XX ADJUSTABLE THERMOSTAT | ¾" | XX12P | |
| CXX13 | TEE IN CXX20 | FLOW ELEMENT FEB (RECIEVER) | ¾" | XX03I | WELL HOUSE XX CONDUITS |
| CXX14 | PCS-XX | FLOW INDICATING TRANSMITTER FIT | ¾" | XX01I, XX04I, XX01C, XX02C | |
| CXX15 | TEE IN CXX14 | POSITION SWITCHES ZSHA & ZSLA | ¾" | XX01C | |
| CXX16 | TEE IN CXX14 | POSITION SWITCHES ZSHB & ZSLB | ¾" | XX02C | |
| CXX17 | TEE IN CXX14 | PRESSURE INDICATING TRANSMITTER PITA | ¾" | XX04I | |
| CXX18 | UNIT HEATER UH-XX | UNIT HEATER HAND-OFF-AUTO SWITCH | ¾" | XX03C | |
| CXX19 | VARIABLE SPEED DRIVE VSD-XX | PCS-XX | ¾" | XX05I | |
| CXX21 | WEATHERHEAD AT POLE | PCS-XX | 1½" | CONTAINS PCS COMM. CABLES | |

1. CONDUIT RIGID GALVANIZED UNLESS OTHERWISE INDICATED.
2. "XX" REPRESENTS THE CORRESPONDING EXTRACTION WELL HOUSE NUMBER.
3. "ZZZ" REPRESENTS THE CORRESPONDING POLE MOUNTED TRANSFORMER NUMBER FROM WHICH CABLE IS CONNECTED TO. SEE DWG # 96X-5500-E-00358 SINGLE LINE FOR CLARITY.

3671

| REF DWG NO. | DRAWING TITLE |
|---|---|
| 95X-5500-X-02002 | DRAWING INDEX |
| 95X-5500-E-02017 | SYMBOLS AND LEGEND |
| 96X-5900-E-00358 | SINGLE LINE DIAGRAM - 13.2 KV FEEDERS |
| 95X-5500-E-02021 | 13.2 KV DISTRIBUTION & COMMUNICATION PLAN |
| 95X-5500-E-02038 | 480/120V POWER, INSTRUMENT, AND LIGHTING PLAN - WELL HOUSE AND VALVE HOUSE |
| 95X-5500-E-02033 | CABLE SCHEDULE |
| 95X-5500-E-02031 | PANEL SCHEDULES |
| 95X-5500-N-02045 | INTERCONNECTION - WELL HOUSE DCS PCS |

PRELIMINARY

000031

| NO. | REVISIONS | DATE | DWN. BY | APPD. | NO. | REVISIONS | DATE | DWN. BY | APPD. | REF. DWG. NO. |
|---|---|---|---|---|---|---|---|---|---|---|
| | | | | | A | ISSUED FOR ENGINEERING REVIEW | 3-5-0 | MWD | | 95X-5500-X-02002 |

NOTE: FLUOR FERNALD CADD DRAWING. DO NOT REVISE MANUALLY.

CONFIGURATION MANAGEMENT DRAWING — YES / NO
EXISTING STRUCTURES OR COMPONENTS AFFECTED BY THIS DRAWING. CONSULT CONFIGURATION MANAGEMENT CONTROL. SEE NOTES.
COGNIZANT ENGINEER DATE

APPROVALS: CIVIL & STR. / ELECTRICAL / ENGINEER / INSTRUMENT / MECHANICAL / CHECKED / APPROVED / SAFETY ENG. / MAINTENANCE / FIRE PROTECT. / WASTE MANAGE. / SECURITY / PROJECTS

Fernald Environmental Management Project
FLUOR FERNALD, INC.
U.S. DEPARTMENT OF ENERGY

ARWWP — SITE
WASTE STORAGE AREA EXTRACTION SYSTEM PHASE I, AND SFES SUPPLEMENTAL WELL ELECTRICAL CONDUIT SCHEDULE
NOT TO SCALE
RES 428 — DATE MAR. 5, 2001 — DRAWN M.W.DERROUGH
95X-5500-E-02036 A

FILE NAME: res428/95xe2036.dgn

FF5.DGN 3/22/00

95xe2036.m schw0542 Wednesday April 11 2001 at 09:37:09 AM EDT

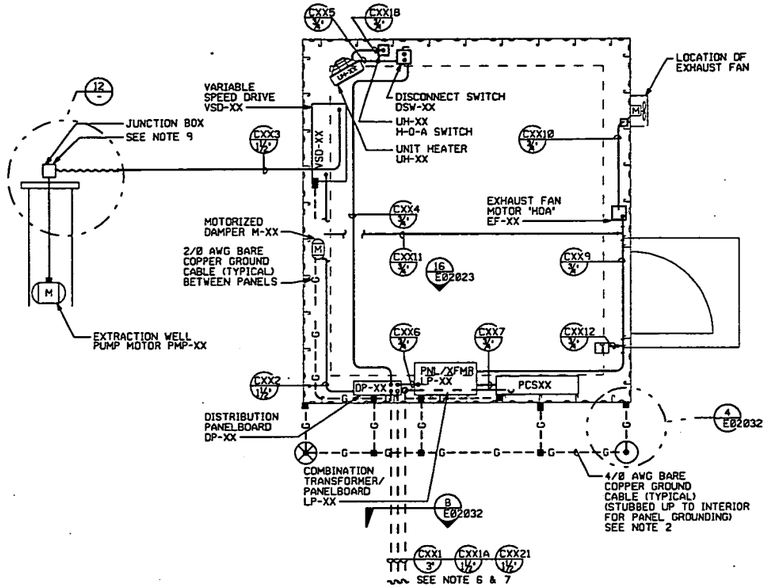


WELL HOUSE EW-XX
POWER PLAN

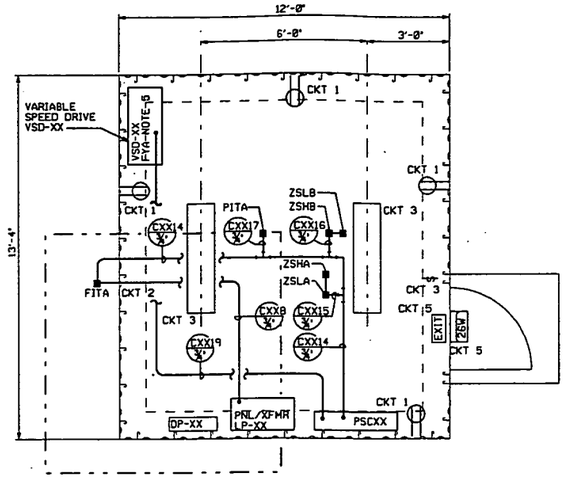


WELL HOUSE EW-XX
LIGHTING AND INSTRUMENT PLAN

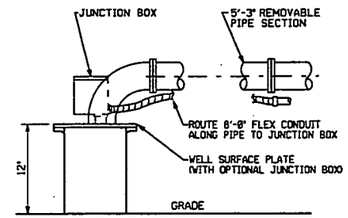


DETAIL 12
NTS

EXTRACTION WELL ELECTRICAL CONNECTION

1. "XX" REPRESENTS THE CORRESPONDING EXTRACTION WELL HOUSE NUMBER.
2. INSTALL #4/0 AWG BARE COPPER BUILDING GROUND GRID. CONNECT COLUMNS TO GROUND GRID USING #2/0 AWG BARE COPPER GROUND CABLE. ALLOW 10 FOOT PIGTAIL AT GROUND STUB UP LOCATIONS FOR CONNECTION TO EQUIPMENT.
3. CONDUIT RUNS ARE SHOWN DIAGRAMMATICALLY. FIELD ROUTE AND SUPPORT CONDUITS AS NECESSARY SUBJECT TO APPROVAL OF THE FERMCO CONSTRUCTION MANAGER.
4. ALL ELECTRICAL DISTRIBUTION RACK(S), PANEL(S), SWITCHE(S), TRANSFORMER(S), AND STARTER(S) SHALL BE GROUNDED USING A #1/0 AWG COPPER GROUND CABLE.
5. FYA DENOTES 4-20 MA INPUT TO VARIABLE SPEED DRIVE.
6. ROUTE CONDUIT TO POLE WITH TRANSFORMER (SEE DWG. 95X-5900-E-00359). PROVIDE 480 V SERVICE ENTRANCE AT POLE AND CONTINUE FEEDER TO TRANSFORMER. STUBUP SPARE CONDUIT AT POWER POLE AND INSIDE WELL HOUSE AT LP-1.
7. ROUTE COMMUNICATIONS CONDUIT WITH ELECTRICAL CONDUITS IN NOTE 6, SEE SECTION B, ON DWG. 95X-5500-E-02032.
8. FIELD ROUTE 120V POWER FOR LIGHTING AND RECEPTACLES IN ¾" RIGID GALVANIZED STEEL CONDUIT TO LIGHTING PANEL LP-XX (OR LP-1) CIRCUIT INDICATED. SEE DWG. 95X-5500-E-02023 FOR PANEL SCHEDULES.
9. TERMINATE MOTOR CONDUIT AND CABLES AT EXTRACTION WELL ELECTRICAL JUNCTION BOX.
10. NOT USED.
11. SUPPORT CONDUIT TO PIPE SUPPORTS WITH UNISTRUT OR STRUCTURAL CHANNEL.

3671

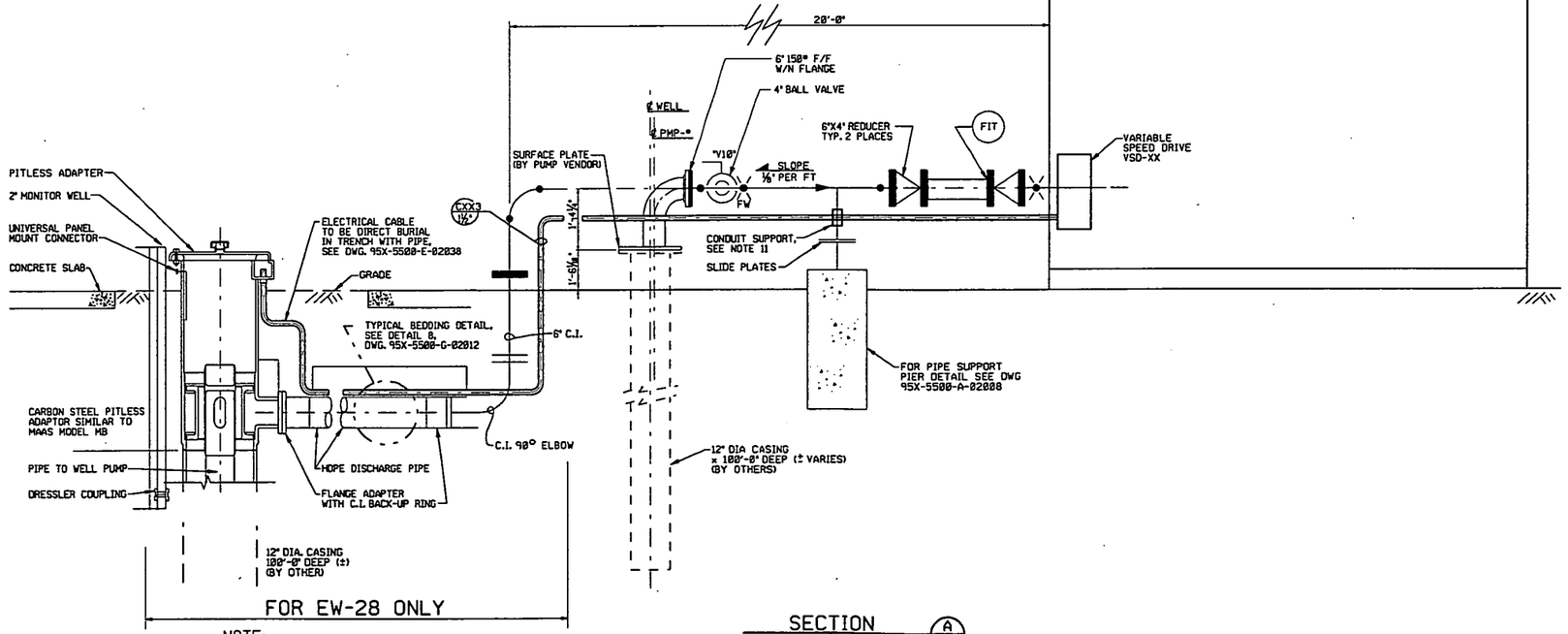


NOTE:
PITLESS ADAPTER TO BE USED FOR EW-28 DUE TO IT BEING REMOTE FROM WELL HOUSE

SECTION A
SCALE : ¾" = 1'-0"
NOTE : FOR PIPING INFORMATION, SEE DWG. 95X-5500-P-02010

| REF DWG NO. | DRAWING TITLE |
|---|---|
| 95X-5500-X-02002 | DRAWING INDEX |
| 95X-5500-E-02023 | ELECTRICAL ELEVATIONS, SECTIONS AND DETAILS |
| 95X-5500-E-02032 | ELECTRICAL ELEVATIONS, SECTIONS AND DETAILS |
| | |
| | |

PRELIMINARY

000032

| NO. | REVISIONS | DATE | DWN. BY | APPD. | NO. | REVISIONS | DATE | DWN. BY | APPD. | REF. DWG. NO. |
|---|---|---|---|---|---|---|---|---|---|---|
| | | | | | A | ISSUED FOR ENGINEERING REVIEW | 4-6 | MWD | | 95X-5500-X-02002 |

NOTE: FLUOR FERNALD CADD DRAWING. DO NOT REVISE MANUALLY.

CONFIGURATION MANAGEMENT DRAWING
EXISTING STRUCTURES OR COMPONENTS MAY BE AFFECTED BY THIS DOCUMENT. CONTACT CONFIGURATION MANAGEMENT CONTROL FOR NOTES.
COGNIZANT ENGINEER DATE

APPROVALS

| | | | |
|---|---|---|---|
| CIVIL & STR. | | SAFETY ENG. | |
| ELECTRICAL | | MAINTENANCE | |
| ENGINEER | | FIRE PROTECT. | |
| INSTRUMENT | | WASTE MANAGE | |
| MECHANICAL | | SECURITY | |
| | | PROJECTS | |
| CHECKED | | | |
| APPROVED | | | |

Fernald Environmental Management Project
FLUOR FERNALD, INC.
U.S. DEPARTMENT OF ENERGY

ARWWP — SITE
WASTE STORAGE AREA EXTRACTION SYSTEM
PHASE I, AND SFES SUPPLEMENTAL WELL
ELECTRICAL 480/120V POWER, INSTRUMENT & LIGHTING PLAN
NOT TO SCALE

RES 420
DATE APRIL 6, 2000
DRAWN M.W.DERROUGH
95X-5500-E-02038 A

FILE NAME: res420/95xe2038.dgn

FFS.DGN 3/22/00

95xe2038.m derr1907 Wednesday April 11 2001 at 09:15:21 AM EDT

## PIPING VALVES

CONFIGURATIONS FOR VALVE TYPE

ANGLE STRAIGHT 3-WAY 4-WAY

VALVE TYPES

- AIR RELEASE VALVE
- AIR AND VACUUM VALVE
- BACKPRESSURE REGULATOR
- BACKFLOW PREVENTER
- BALL
- BLOWDOWN
- BUTTERFLY/DAMPER
- CHECK, SWING TYPE
- CHECK, WAFER TYPE
- DELUGE
- DIAPHRAGM
- DIFFERENTIAL PRESSURE REGULATOR
- FLOAT
- FOOT
- GATE
- GLOBE
- HOSE
- KNIFE
- NEEDLE
- PINCH
- PRESSURE REGULATOR
- PLUG
- SAFETY RELIEF
- SLIDING GATE
- STOP CHECK
- VACUUM

## PIPING SEGMENT BREAKS

- CONSTRUCTION REQUIREMENTS
- INSULATION REQUIREMENTS
- PIPING MATERIAL REQUIREMENTS
- UNDERGROUND ROUTING (SHADED AREA INDICATES DIRECTION OF UNDERGROUND)
- GROUP BREAK FOR END OF PIPING LINE NUMBER

## PIPING FITTINGS

- BASKET STRAINER - SINGLE
- BASKET STRAINER - DUPLEX
- CAP
- CONCENTRIC REDUCER
- CONE STRAINER
- ECCENTRIC REDUCER
- EXPANSION FLANGE
- EXPANSION JOINT
- FILTER
- FLANGE
- FLEXIBLE HOSE
- HOSE CONNECTION
- HOSE QUICK COUPLING
- MECHANICAL COUPLING
- ORIFICE
- ORIFICE UNION
- PLUG
- REDUCING FLANGE
- STEAM TRAP
- SUMP STRAINER
- TEMPORARY STRAINER
- Y-STRAINER

## PIPING SYMBOLOGY

- PRIMARY PIPING
- SECONDARY PIPING
- EXISTING PIPING
- FLEXIBLE HOSE
- FUTURE PIPING
- TIE-IN POINT
- INSULATED ELECTRIC HEAT TRACE

## EQUIPMENT SYMBOLS

- AGITATOR (MIXER)
- CENTRIFUGAL BLOWER
- (AREA NAME) DEFINED BOUNDRY
- HORIZONTAL CENTRIFUGAL PUMP
- (SYSTEM NAME) PACKAGED SYSTEM BOUNDRY
- SUBMERSIBLE TURBINE PUMP
- SUMP PUMP WITH MOTOR

## PIPING LINE NUMBER FORMAT

MEDIUM CODE
NOMINAL PIPE SIZE
NOMINAL CONTAINMENT PIPE SIZE (WHERE SHOWN)
MATERIAL CODE
LINE NUMBER
INSULATION CODE

GW-6(10)"-B4-2930-ET

MEDIUM FLOW DIRECTION

## ABBREVIATIONS

| | |
|---|---|
| AC | AIR TO CLOSE |
| AG | AGITATOR |
| AO | AIR TO OPEN |
| ARV | AIR RELEASE VALVE |
| AVV | AIR AND VACUUM VALVE |
| AWWT | ADVANCED WASTEWATER TREATMENT |
| BLW | BLOWER |
| BTU | BRITISH THERMAL UNIT |
| CFM | CUBIC FEET/MINUTE |
| CO | CLEAN OUT |
| CU FT | CUBIC FEET |
| ECC | ECCENTRIC |
| EF | EXHAUST FAN |
| FC | FAIL CLOSED |
| FO | FAIL OPEN |
| GPH | GALLONS PER HOUR |
| GPM | GALLONS PER MINUTE |
| GV | GRAVITY VENTILATOR |
| HDPE | HIGH DENSITY POLYETHYLENE |
| IA | INSTRUMENT AIR |
| KW | KILOWATT |
| LB/HR | POUNDS PER HOUR |
| MATL | MATERIAL |
| MED | MEDIUM |
| MS | MIST ELIMINATOR |
| NC | NORMALLY CLOSED |
| NO | NORMALLY OPEN |
| PIV | POST INDICATOR VALVE |
| PMP | PUMP |
| RED | REDUCER |
| RH | RELATIVE HUMIDITY |
| SCFM | STANDARD CUBIC FEET/MINUTE |
| SFES | SOUTH FIELD EXTRACTION SYSTEM |
| SWRB | STORMWATER RETENTION BASIN |
| TBD | TO BE DETERMINED |
| TF | TOP FLAT |
| TNK | TANK |
| TYP | TYPICAL |
| UH | UNIT HEATER |
| 1 | SOLENOID VALVE COMMON PORT |
| 2 | SOLENOID VALVE NORM. OPEN PORT |
| 3 | SOLENOID VALVE NORM. CLOSED PORT |
| | |
| ID | INJECTION DEMONSTRATION |
| SPO | SOUTH PLUME OPTIMIZATION |

## PIPING SPECIFICATIONS

| FLOWING MEDIUM | MED. CODE | MATL CODE |
|---|---|---|
| BACK WASH | BW | T |
| BLOWER AIR | BA | A |
| CHILLED WATER | CHS, CHR | A |
| CHLORINE | CL | B1 |
| CONDENSATE | LC | W, T |
| CONDENSER WATER | CWS, CWR | A |
| COOLING WATER | WS, WR | A |
| DRAIN | DR | A, T |
| FILTRATE EFFLUENT | FT | A |
| FLOCCULANT | FL | A |
| FLUSH WATER | FW | T |
| FORCE MAIN | FM | M |
| GROUND WATER | GW | A, B, B4, M |
| INSTRUMENT AIR | IA | T |
| MELTER OFF-GAS | OG | T |
| NITRIC ACID | AN | T1 |
| PERCHED GND WATER | PGW | B |
| PHOSPHORIC ACID | PAPH | T1 |
| PLANT AIR | PA | W |
| POLISHED WATER | PW | A |
| POTABLE WATER | DW | W, B4, C1 |
| PROCESS WATER | TW, TWX1 | A, B4 |
| PROCESS WASTEWATER | CE | A |
| RAW WATER | RW | A |
| RECYCLE WATER | RC | T, B2 |
| SCRUBBER RECYCLE | RSL | T |
| SLURRY | SL | T |
| SODIUM CARBONATE | SC | A |
| SODIUM HYDROXIDE | NA | T |
| SODIUM SILICATE | SS | A |
| STORM WATER | ST | A, B4, B5 |
| SULFURIC ACID | SB | T1 |
| SUMP DISCHARGE | SU | T |
| THICKENER OVERFLOW | TO | T |
| VACUUM | V | A |
| VENTILATION AIR | VE | T, A |
| WASTE WATER | WW | T |

| MATL CODE | DESCRIPTION |
|---|---|
| A | A53 SEAMLESS CARBON STEEL |
| B | PVC |
| B1 | PVDF |
| B2 | PVDF, 100PSI |
| B3 | CPVC |
| B4 | HDPE |
| B5 | CORRUGATED HDPE |
| C1 | CLASS 150, COPPER TUBING |
| L | FIBERGLASS REINFORCED PLASTIC |
| M | DUCTILE IRON |
| T | 304L, STAINLESS STEEL |
| T1 | 316L, STAINLESS STEEL |
| W | A53, GR. A, GALVANIZED STEEL |

| INSUL CODE | DESCRIPTION |
|---|---|
| ET | ELECTRIC TRACED AND INSULATED |
| IC | ANTI-CONDENSATION INSULATION |
| ST | STEAM TRACED AND INSULATED |

## LETTERS OF INSTRUMENT IDENTIFICATION

| LETTER | 1ST LETTER | 2ND LETTER | 3RD OR 4TH LETTER |
|---|---|---|---|
| | MEASURED OR INITIATING VARIABLE | MODIFIER | READ OUT OR PASSIVE FUNCTION |
| A | ANALYSIS | ALARM | ALARM |
| B | BURNER FLAME | ---- | ---- |
| C | CAMERA | CONTROLLER | CLOSED |
| D | DENSITY | DIFFERENTIAL | ---- |
| E | VOLTAGE | ELEMENT | ELEMENT |
| F | FLOW RATE | RATIO (FRACTION) | ---- |
| G | GAGING (DIM) | VIEWING DEVICE | GLASS |
| H | HAND (MANUAL) | ---- | ---- |
| I | CURRENT (ELEC) | INDICATE | INDICATE |
| J | POWER | SCAN | ---- |
| K | TIME | ---- | ---- |
| L | LEVEL | LIGHT | LOW |
| M | MOIST. OR HUMIDITY | ---- | ---- |
| N | ---- | ---- | ---- |
| O | OBSERVATION | ORIFICE | OPEN |
| P | PRESSURE OR VACUUM | ---- | POINT (TEST) |
| Q | QUANTITY OR EVENT | TOTALIZER | ---- |
| R | RESTRICTIVE | RECORDER | RECORDER |
| S | SPEED OR FREQUENCY | SAFETY/SWITCH | SWITCH |
| T | TEMPERATURE | TRANSMITTER | TRANSMITTER |
| U | USER'S GUIDE | ---- | MULTIFUNCTION |
| V | VISCOSITY | ---- | VENT, VALVE |
| W | WEIGHT OR FORCE | WELL | ---- |
| X | UNCLASSIFIED | ---- | UNCLASSIFIED |
| Y | RELAY | RELAY | ---- |
| Z | POSITION | ---- | ---- |

## FUNCTION LABELS

| SYMBOLS | DESCRIPTION |
|---|---|
| AVG | AVERAGING |
| − | BIAS MINUS |
| + | BIAS PLUS |
| ± | BIAS PLUS/MINUS |
| d/dt | DERIVATIVE |
| ÷ | DIVIDING |
| ∫ | INTEGRAL |
| X | MULTIPLYING |
| K | PROPORTIONAL |
| $X^n$ | RAISE TO POWER |
| REV | REVERSE ACTION |
| $\sqrt{X}$ | ROOT EXTRACT |
| Σ | SUMMING |

3671

## INSTRUMENT ACTUATOR LABELS

- BALL FLOAT
- CAPACITY SENSOR
- DIAPHRAGM
- DISPLACING FLOAT
- DUAL ACTION PISTON
- DUAL SOLENOID
- MANUAL
- MOTOR
- PILOT
- SINGLE ACTION PISTON
- SINGLE SOLENOID
- SINGLE SOLENOID WITH RESET

## INSTRUMENT DEVICE TAG TYPES

- IN-LINE TAG WITH LEADER LINE
- LOCAL MOUNTED DEVICE
- FRONT OF PANEL MOUNTED DEVICE
- FRONT OF PANEL MOUNTED DEVICE AUXILLARY LOCATION
- REAR OF PANEL MOUNTED DEVICE
- REAR OF PANEL MOUNTED DEVICE AUXILLARY LOCATION
- SHARED DISPLAY COMPUTER CONTROL AND OPERATOR INTERFACE

EXAMPLE OF TAG CALLOUTS

- INSTRUMENT TAG TYPE
- LETTERS OF INSTRUMENT IDENT.
- LOOP NUMBER SUFFIX
- LOOP NUMBER
- SPECIAL DESIGNATION

## INSTRUMENT IN-LINE DEVICES

- AVERAGING PITOT
- FLOW NOZZLE
- FLUME
- MAGNETIC FLOW METER
- ORIFICE PLATE
- POSITIVE DISPLACEMENT METER
- PROPELLER METER
- STRAIGHTING VANE
- SILENCER
- THERMOWELL
- ULTRASONIC FLOW METER
- VARIABLE AREA FLOW METER
- VENTURI
- VORTEX SHEDDING FLOW METER
- WEIR

## INSTRUMENT SIGNAL LINES

- CONNECT TO PROCESS
- MECHANICAL LINK
- ELECTRIC BINARY
- PNEUMATIC BINARY
- GUIDED ELECTROMAG OR SONIC
- SOFTWARE/DATA LINK
- CAPILLARY
- ELECTRIC
- PNEUMATIC
- HYDRAULIC
- UNGUIDED ELECTROMAG OR SONIC
- UNDEFINED

## INSTRUMENT SPECIAL DESIGNATIONS

| DESIGNATION | FUNCTION / ABBREVIATION |
|---|---|
| C | CLOSED |
| DIF | DIFFERENTIAL |
| EX | EXISTING INSTRUMENTATION |
| H | HIGH |
| HH | HIGH HIGH |
| HL | HIGH LOW |
| HOA | HAND-OFF-AUTO |
| IA | IN-AUTO |
| I/I | CURRENT TO CURRENT |
| I/O | INPUT/OUTPUT |
| I/P | CURRENT TO PNEUMATIC TRANSDUCER |
| L | LOW |
| LL | LOW LOW |
| LOR | LOCAL-OFF-REMOTE |
| O | OPEN |
| OA | OFF-AUTO |
| OCA | OPEN-CLOSED-AUTO |
| R | RUNNING |
| Y | UNDETERMINED COMPUTING RELAY |
| | |

## MISC. INSTRUMENTATION SYMBOLS

- INTERLOCK
- DIAPHRAGM SEAL
- INSTRUMENT AIR SUPPLY

PRELIMINARY

000033

| REF DWG NO. | DRAWING TITLE |
|---|---|
| 95X-5500-X-02002 | DRAWING INDEX |

| NO. | REVISIONS | DATE | DWN. BY | APPD. | NO. | REVISIONS | DATE | DWN. BY | APPD. | REF. DWG. NO. |
|---|---|---|---|---|---|---|---|---|---|---|
| | | | | | A | ISSUED FOR ENGINEERING REVIEW | 11-0 | JML | | 95X-5500-X-02002 |

NOTE: FLUOR FERNALD CADD DRAWING. DO NOT REVISE MANUALLY.

CONFIGURATION MANAGEMENT DRAWING — YES / NO — EFFECTS STRUCTURES OR COMPONENTS IDENTIFIED IN CONFIGURATION MANAGEMENT PLAN OR CONFIGURATION MANAGEMENT CONTROL DOC NOTED. — COGNIZANT ENGINEER — DATE

APPROVALS: CIVIL & STR. / ELECTRICAL / ENGINEER / INSTRUMENT / MECHANICAL / CHECKED / APPROVED / SAFETY ENG. / MAINTENANCE / FIRE PROTECT. / WASTE MANAGE. / SECURITY / PROJECTS

Fernald Environmental Management Project

FLUOR FERNALD, INC.

U.S. DEPARTMENT OF ENERGY

ARWWP — SITE

WASTE STORAGE AREA EXTRACTION SYSTEM
PHASE I, AND SFES SUPPLEMENTAL WELL
MECHANICAL PROCESS
PIPING AND INSTRUMENTATION SYMBOLS & LEGEND

RES 429 — DATE APRIL 6, 2001 — DRAWN MIKE LOCKE — 95X-5500-N-02041 — A

FILE NAME: res428/95xn204Ldgn

FFSLOGN 3/22/00

95xn2041.m derr1907 Monday April 09 2001 at 03:01:46 PM EDT

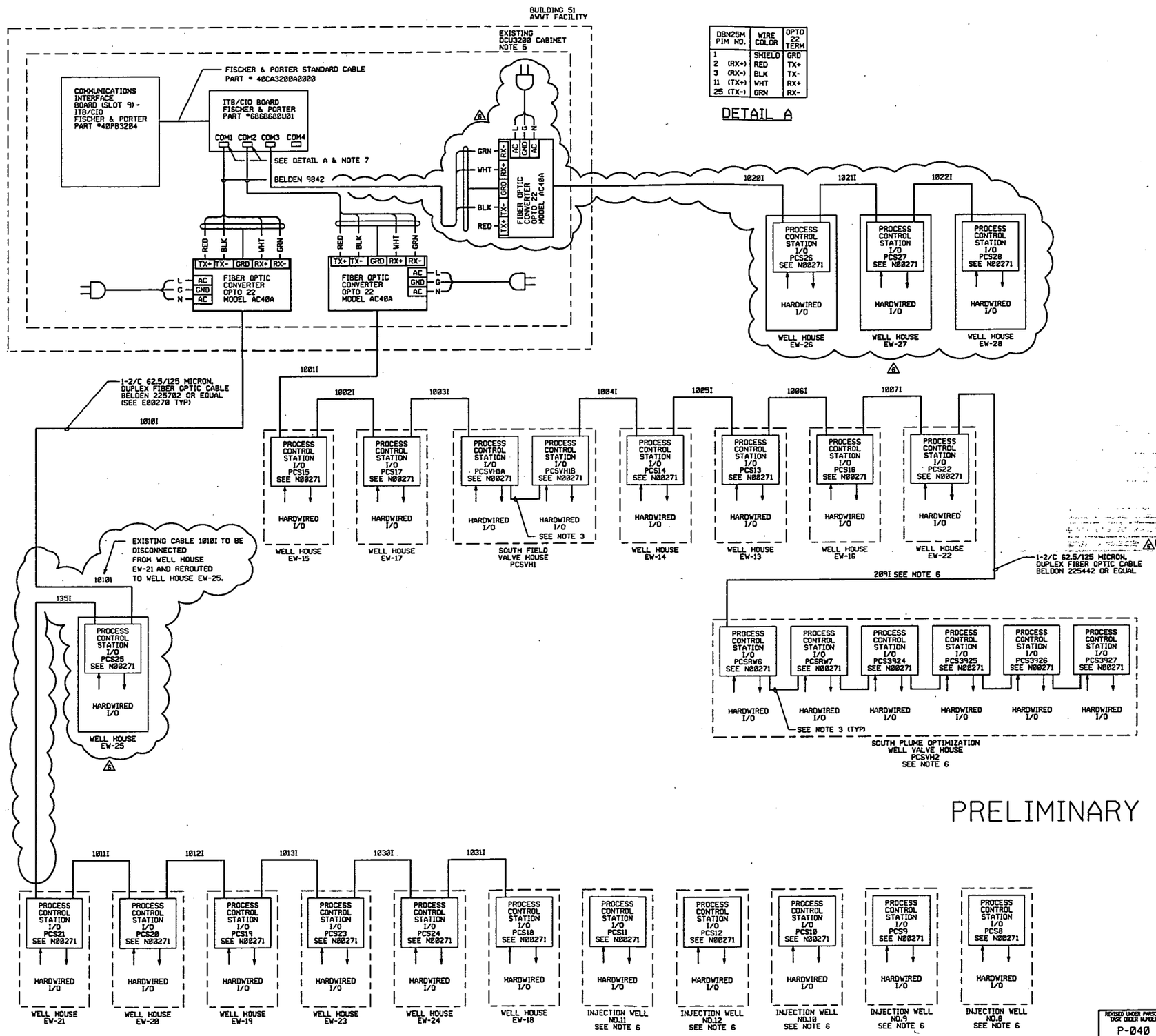


| DBN25M PIN NO. | WIRE COLOR | OPTO 22 TERM |
|---|---|---|
| 1 | SHIELD | GRD |
| 2 (RX+) | RED | TX+ |
| 3 (RX-) | BLK | TX- |
| 11 (TX+) | WHT | RX+ |
| 25 (TX-) | GRN | RX- |

DETAIL A

PRELIMINARY

## NOTES

1. FIBER OPTIC CONVERTERS REQUIRED FOR EACH END OF FIBER OPTIC COMMUNICATIONS CABLE. SEE DWG 95X-5900-N-00271 THRU 00272 FOR PROCESS CONTROL STATION INTERCONNECTION DIAGRAMS AND FOR THE SOUTH PLUME OPTIMIZATION AND INJECTION DEMONSTRATION, SEE DRAWINGS 95X-5900-N-00438 AND 95X-5900-N-00442.
2. SEE DRAWING 95X-5900-E-00244 FOR ROUTING OF COMMUNICATION LINES TO THE VALVE AND WELL HOUSES. SEE DRAWING 95X-5900-E-00245 FOR INTERNAL WELL AND VALVE HOUSE ROUTING.
3. J9 OF PCSRW6 PLUGS INTO J10 OF PCSRW7, ETC. CORD IS SUPPLIED WITH CONTROLLER.
4. SEE DRAWING 95X-5900-E-00245 FOR PCS LOCATIONS.
5. UNDER DIRECTION OF THE FERMCO CONSTRUCTION MANAGER, INSTALL NEW COMPONENTS AS SHOWN INSIDE THE EXISTING DCU3200 CABINET.
6. THIS EQUIPMENT IS FURNISHED AS PART OF SOUTH PLUME OPTIMIZATION AND INJECTED DEMONSTRATION, PARSONS P0169. SEE ALSO SOUTH PLUME DRAWING 95X-5900-X-00411.
7. CONTRACTOR SHALL PROVIDE DB25 MALE CONNECTOR WITH SOLDER CONNECTIONS AS SHOWN IN DETAIL A.
8. NEW EQUIPMENT AND CABLE REROUTING/ADDITIONS PROVIDED FOR WELLS EW-25, EW-26, EW-27 AND EW-28 .

3671

| REF DWG NO. | DRAWING TITLE |
|---|---|
| 95X-5900-X-00203 | DRAWING INDEX |
| 95X-5900-E-00244 | 13.2KV POWER AND COMMUNICATIONS PLAN |
| 95X-5900-E-00245 | EXTRACTION WELL HOUSE POWER AND 120V PLANS |
| 95X-5900-E-00270 | CABLE SCHEDULE |
| 95X-5900-N-00271 | INTERCONNECTION DIAGRAM - WELL HOUSE DCS PCS |
| 95X-5900-N-00272 | INTERCONNECTION DIAGRAM - VALVE HOUSE DCS PCS |
| 95X-5900-X-00411 | DRAWING INDEX FOR THE SOUTH PLUME OPTIMIZATION AND INJECTION DEMONSTRATION |
| 95X-5900-N-00438 | SOUTH PLUME OPTIMIZATION & INJECTION DEMONSTRA INTERCONN DIAG - OPTIMIZATION & RECOVERY WELLS |
| 95X-5900-N-00442 | SOUTH PLUME OPTIMIZATION & INJECTION DEMONSTRA INTERCONN DIAG - INJECTION SYSTEM |
| 95X-5900-E-00461 | CABLE SCHEDULE (101 - 150) |
| 95X-5500-X-02002 | DRAWING INDEX |

| REV. NO. | ISSUE OR REVISION PURPOSE - DESCRIPTION | A-E | FERMCO | DATE |
|---|---|---|---|---|
| 6 | REVISED AS PER RES4211 (ADDED PROCESS CONTROL STATIONS FOR EW-25, EW-26, EW-27 & EW-28) | GES 4/6/01 | | |
| 5 | "AS-BUILT" PER FLUOR FERNALD, TOP 40 | PF | N/A | 3/05/00 |
| 4 | CFC FOR WELLS EW-23 & EW-24 | PF | N/A | 7/30/99 |
| 3 | "AS-BUILT" PER FDF. | TH | N/A | 9/30/98 |
| 2 | INCORPORATED DCN 53200-003 & 53100/300-004, BELDEN CABLE WAS 225812 | TH | N/A | 01/30/98 |
| 1 | SOUTH PLUME OPTIMIZATION AND INJECTION DEMONSTRATION. PARSONS P0169 ADDED RTU22, ASSOCIATED FIBER OPTIC CONVERTERS, ADDED RTU22 TO NOTE 1 AND S. PLUME DWG INDEX REF. SFES - ISSUED FOR DESIGN UPGRADE | TPH | N/A | 05/13/97 |
| 0 | CERFIFIED FOR CONSTRUCTION | RWB | NA | 09/15/95 |

INITIALS AND DATE

# UNITED STATES DEPARTMENT OF ENERGY
## FERNALD ENVIRONMENTAL MANAGEMENT PROJECT

THIS DRAWING PREPARED BY
PARSONS
THE RALPH M. PARSONS CO. - PARSONS MAIN, INC. - ENGINEERING-SCIENCE, INC.
CINCINNATI, OHIO

PROJECT NAME
SOUTH FIELD EXTRACTION SYSTEM

DRAWING TITLE
INSTRUMENTATION
CONTROL SYSTEM ARCHITECTURE

000034

| DRAWN BY | DATE | LEAD ENGINEER | DATE | CHECKED BY | DATE |
|---|---|---|---|---|---|
| B.JASPER | 07-17-95 | B.JASPER | 9/15/95 | J. L. COOPER | 08/02/95 |

PLANT/BLDG. NO. | FLOOR | SCALE: NONE | CLASS

SUBMITTED FOR APPROVAL: R.W. BRETTIN 9/15/95 | FERMCO CRU APPROVAL: NA | FDF PROJECT NUMBER: SFES-53200

REVISED UNDER PARSONS TASK ORDER NUMBER: P-040

PREPARED UNDER PARSONS PROJECT ORDER NUMBER: CRU5/P0126

A-E DOC PROJECT NO. | DATE | FDF PROJECT NO.: WBS 1.1.1.1.5.3.1 00-90701 | DRAWING INDEX CODE NO.: 95X-5900-N-00273 | SHEET NO.: N0005 | REV. NO.: 6

chi/res4211/95-00273.dgn installed to supersede gi/parsons/p0126/95-00273.dgn

95n00273.m derr1907 Monday April 09 2001 at 04:15:26 PM EDT

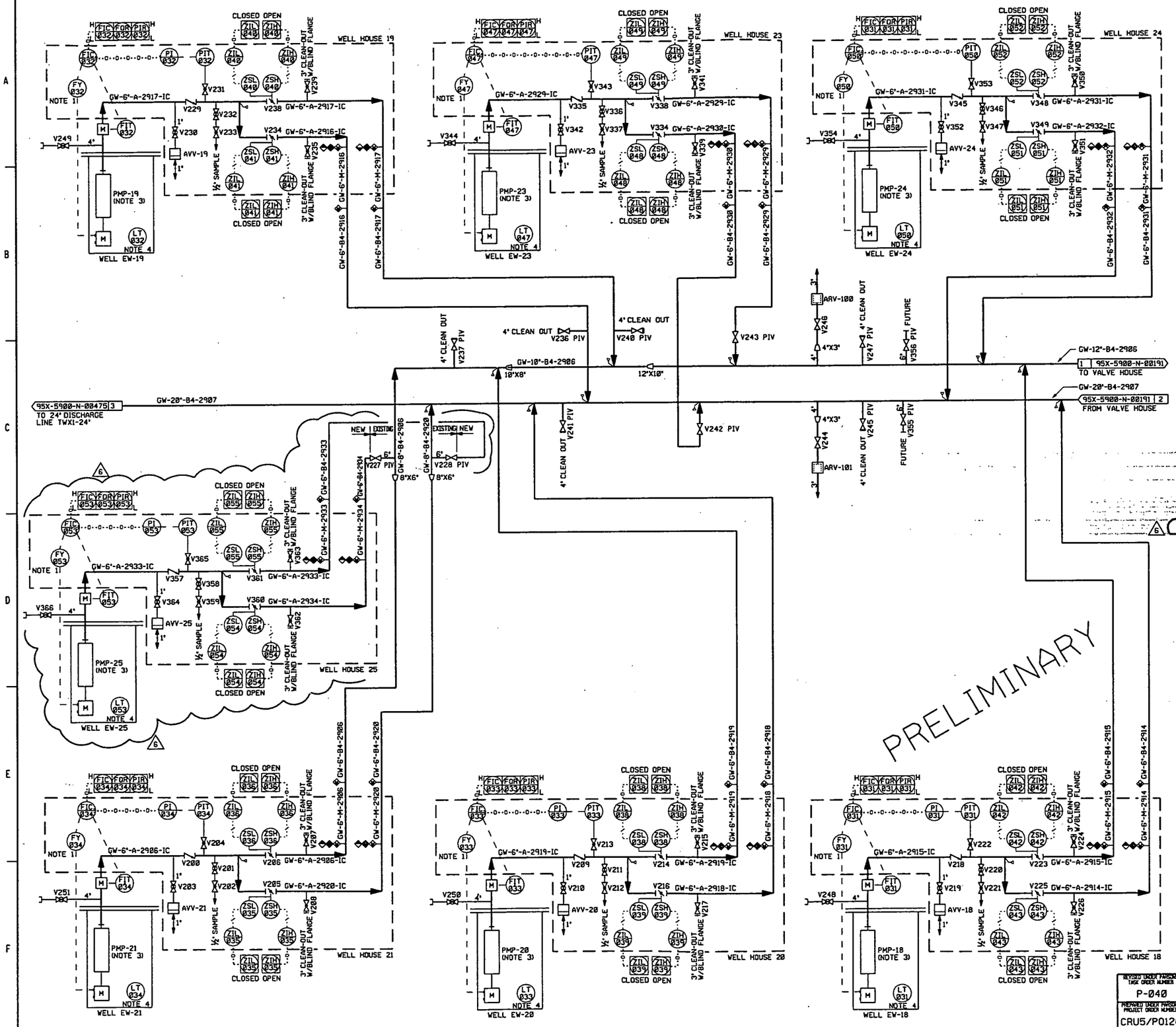


NOTES

1. THE INSTRUMENTATION TAG DESIGNATION 'FY' REPRESENTS A VARIABLE FREQUENCY DRIVE.
2. SEE CIVIL DRAWINGS FOR UNDERGROUND PIPING VENTS AND CLEAN-OUTS.
3. THE TWO DIGIT SUFFIX ASSIGNED TO THE PUMPS CORRESPOND TO THE EXTRACTION WELL NUMBER. SUBCONTRACTOR SHALL PROVIDE PIPE REDUCER AT PUMP DISCHARGE AS REQUIRED.
4. THE LEVEL TRANSMITTERS SHOWN ARE ACCESSIBLE FOR LOCAL INDICATION USING FDF, INC. PORTABLE DATA RECORDERS.
5. WELL SHALL BE PROVIDED WITH ½" POLYETHYLENE CHLORINE INJECTION TUBE.
6. FOR CLARITY, ONLY THE NEW EQUIPMENT/ MATERIALS FOR WELL EW-25 IS SHOWN CLOUDED ON THIS DRAWING.

3671

| LAST VALVE NUMBER | V356 |
|---|---|

| REF DWG NO. | DRAWING TITLE |
|---|---|
| 95X-5900-X-00203 | DRAWING INDEX |
| 95X-5900-N-00189 | SYMBOLS AND LEGEND |
| 95X-5900-N-00191. | PIPING AND INSTRUMENTATION DIAGRAM - WELLS EW-13, EW-14, EW-15, EW-16, EW-17, & EW-22 |
| 95X-5900-N-00475 | PIPING AND INSTRUMENTATION DIAGRAM - SFES VALVE HOUSE |
| 95X-5500-X-02002 | DRAWING INDEX |

| REV. NO. | ISSUE OR REVISION PURPOSE - DESCRIPTION | A-E INITIALS | REVIWED INITIALS | DATE |
|---|---|---|---|---|
| 6 | REVISED AS PER RES 4211 ADD SOUTH FIELD EXTRACTION SYSTEM EW-25 | GES 4/5/01 | | |
| 5 | "AS-BUILT" PER FLUOR FERNALD, TOP 40 | PF | N/A | 3/26/00 |
| 4 | INCORPORATED DCN 53200-059 ; CFC FOR WELLS EW-23 & EW-24 | PF | N/A | 7/30/99 |
| 3 | "AS-BUILT" PER FDF REDLINE MARK-UPS. INCORPORATED DCN# 53200-022 AND -047. | TH | N/A | 9/30/98 |
| 2 | ISSUED FOR DESIGN UPGRADE | TH | N/A | 6/13/97 |
| 1 | ISSUED IN RESPONSE TO EPA COMMENTS, AND DCNS 25-SF-001/002 | RWB | N/A | 3/25/96 |
| 0 | CERTIFIED FOR CONSTRUCTION | RWB | N/A | 9/15/95 |

**UNITED STATES DEPARTMENT OF ENERGY**
**FERNALD ENVIRONMENTAL MANAGEMENT PROJECT**

THIS DRAWING PREPARED BY
**PARSONS**
THE RALPH M. PARSONS CO. - PARSONS MAIN, INC. - ENGINEERING-SCIENCE, INC.
CINCINNATI, OHIO

PROJECT NAME: SOUTH FIELD EXTRACTION SYSTEM

000035

DRAWING TITLE
MECHANICAL PROCESS
PIPING AND INSTRUMENTATION DIAGRAM
WELLS EW-18, EW-19, EW-20, EW-21, EW-22, EW23, EW-24 & EW-25

| DRAWN BY | DATE | LEAD ENGINEER | DATE | CHECKED BY | DATE |
|---|---|---|---|---|---|
| G. AMBUSH | 03-27-95 | S. GHANTOUS | 9-15-95 | J. L. COOPER | 4-6-95 |

| PLANT/BLDG. NO. | FLOOR | SCALE | CLASS |
|---|---|---|---|
| | | NONE | |

| SUBMITTED FOR APPROVAL | FERNCO CRU APPROVAL | FDF PROJECT NO. |
|---|---|---|
| R. W. BRETTIN 9-15-95 | NA | SFES-53200 |

| REVISED UNDER PARSONS TASK ORDER NUMBER | DOE PROJECT NO. | FDMP PROJECT NO. | DRAWING INDEX CODE NO. | SHEET NO. | REV. NO. |
|---|---|---|---|---|---|
| P-040 | | WBS 1.1.1.1.5.3.1 00-90701 | 95X-5900-N-00190 | N0002 | 6 |
| PREPARED UNDER PARSONS PROJECT ORDER NUMBER: CRU5/P0126 | | | | | |

95n00190.m der1907 Monday April 09 2001 at 02:36:25 PM EDT

1. THE INSTRUMENTATION TAG DESIGNATION 'FY' REPRESENTS A VARIABLE FREQUENCY DRIVE.
2. SEE CIVIL DRAWINGS FOR UNDERGROUND PIPING VENTS AND CLEAN-OUTS.
3. THE TWO DIGIT SUFFIX ASSIGNED TO THE PUMPS CORRESPOND TO THE EXTRACTION WELL NUMBER. SUBCONTRACTOR SHALL PROVIDE PIPE REDUCER AT PUMP DISCHARGE AS REQUIRED.
4. WELL SHALL BE PROVIDED WITH ½" POLYETHYLENE CHLORINE INJECTION TUBE.

3671

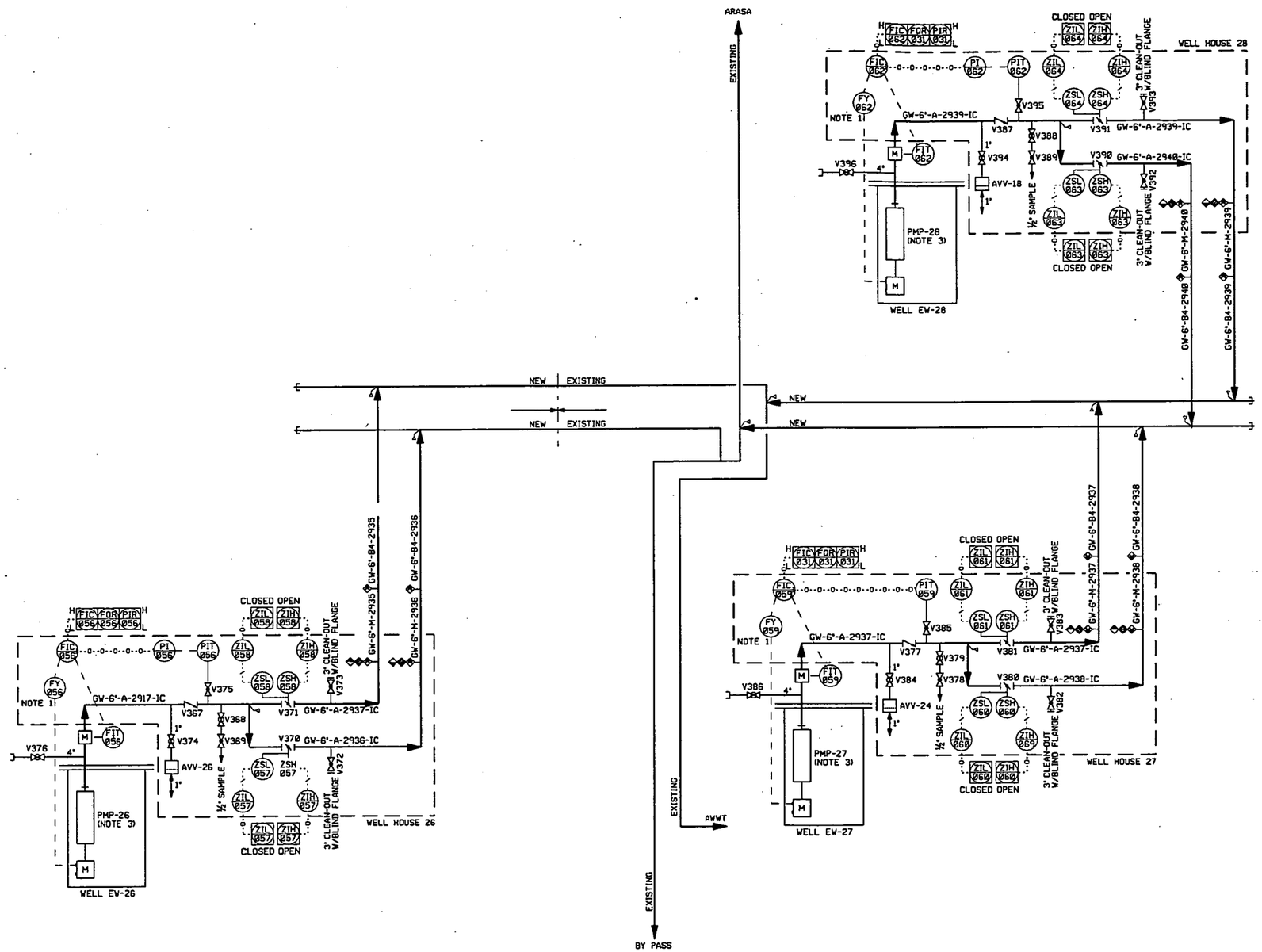


| LAST VALVE NUMBER | V396 |
|---|---|

| REF DWG NO. | DRAWING TITLE |
|---|---|
| 95X-5500-X-02002 | DRAWING INDEX |
| 95X-5500-N-02041 | SYMBOLS AND LEGEND |
| 95X-5500-N-00475 | PIPING AND INSTRUMENTATION DIAGRAM - SFES VALVE HOUSE |
| | |
| 95X-5900-N-00190 | PIPING AND INSTRUMENTATION DIAGRAM - WELLS EW-18, EW-19, EW-20, EW-21, EW-23, & EW-24 |

PRELIMINARY

000036

| NO. | REVISIONS | DATE | DWN. BY | APPD. | NO. | REVISIONS | DATE | DWN. BY | APPD. | REF. DWG. NO. |
|---|---|---|---|---|---|---|---|---|---|---|
| A | ISSUED FOR ENGINEERING REVIEW | | | | | | 4-4-0 | CES | | 95X-5500-X-02002 |

NOTE: FLUOR FERNALD CADD DRAWING. DO NOT REVISE MANUALLY.

CONFIGURATION MANAGEMENT DRAWING — EXISTING STRUCTURES OR COMPONENTS MAY BE AFFECTED BY THIS DRAWING. CONTACT THE MANAGEMENT CONTROL FOR NOTES.

COGNIZANT ENGINEER DATE

APPROVALS: CIVIL & STR. / ELECTRICAL / ENGINEER / INSTRUMENT / MECHANICAL / CHECKED / APPROVED / SAFETY ENG. / MAINTENANCE / FIRE PROTECT. / WASTE MANAGE. / SECURITY / PROJECTS

Fernald Environmental Management Project

FLUOR FERNALD, INC.

U.S. DEPARTMENT OF ENERGY

ARWWP — SITE

WASTE STORAGE AREA EXTRACTION SYSTEM PHASE I, AND SFES SUPPLEMENTAL WELL PIPING AND INSTRUMENTATION DIAGRAM WELL No's. 1, 2 & 3

RES 428 — DATE APRIL 6, 2001 — DRAWN C. SCHWARZMAN

95X-5500-N-02044 A

FILE NAME: /res428/95xn2044.dgn

FF-2.DGN 3/22/00

95xn2044.m schw0542 Wednesday April 11 2001 at 12:04:35 PM EDT

| TYPICAL WELL HOUSE XX/ PCS XX | INSTRUMENT LOOP NUMBER MATRIX | | | | | | | | |
|---|---|---|---|---|---|---|---|---|---|
| | FYA | FIT | PITA | VA | ZSLA | ZSHA | VB | ZSLB | ZSHB |
| 25 | FY053 | FIT053 | PIT053 | V360 | ZSL054 | ZSH054 | V361 | ZSL055 | ZSH055 |
| 26 | FY056 | FIT056 | PIT056 | V370 | ZSL057 | ZSH057 | V371 | ZSL058 | ZSH058 |
| 27 | FY059 | FIT059 | PIT059 | V380 | ZSL060 | ZSH060 | V381 | ZSL061 | ZSH062 |
| 28 | FY062 | FIT062 | PIT062 | V390 | ZSL063 | ZSH063 | V391 | ZSL064 | ZSH064 |

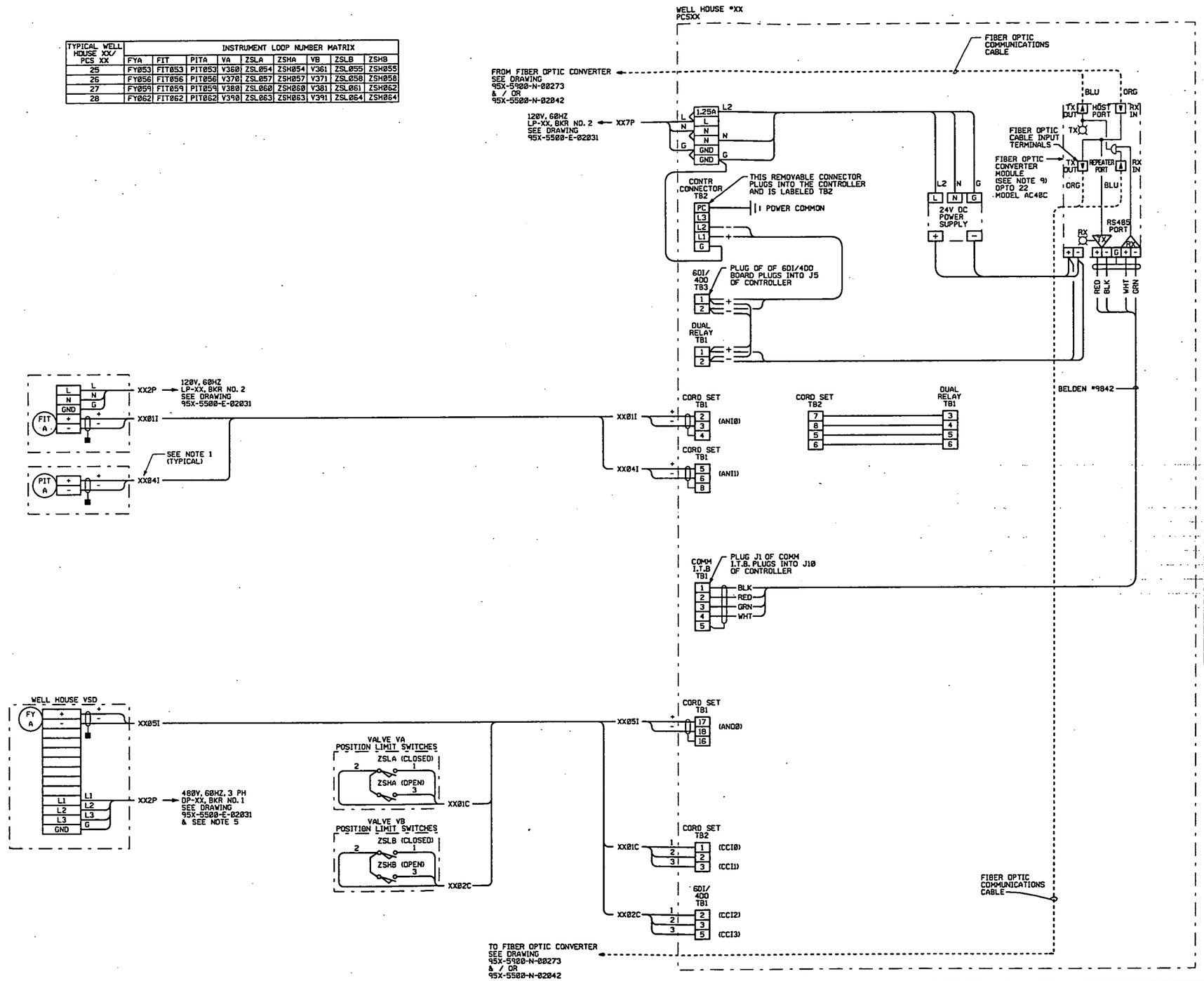


## NOTES:

1. 'XX' REPRESENTS THE CORRESPONDING WELL NUMBER.
2. BE SURE THAT ONLY JUMPERS A2 & A5 ARE INSERTED IN THE FIBER OPTIC CONVERTER MODULE.
3. NOT USED
4. FOR CABLE SCHEDULES SEE DRAWING'S 95X-5500-E-02033, 02034, & 02035.
5. FOR THREE PHASE POWER CABLES, SEE DRAWING 95X-5900-E-00242.
6. NOT USED
7. ONE BAILEY FISCHER & PORTER MODEL 53MC5222A25BAC1XXCXX CONTROLLER WITH CORD SETS IS REQUIRED PER WELL HOUSE. THIS MODEL NUMBER INCLUDES ALL ITEMS IN THE WELL HOUSE INDICATED AS CONTR CONNECTOR, 6DI/4DO, DUAL RELAY, COMM I.T.B. AND CORD SET.
8. 6A, 24V DC POWER SUPPLY SHALL BE SOLA (GENERAL SIGNAL) TYPE 28-1024-1, OR APPROVED EQUAL.
9. BE SURE THAT ONLY JUMPERS A2 & A5 ARE INSERTED IN THE FIBER OPTIC CONVERTER MODULE.

3671

## LEGEND:

CONTRACTOR WIRING

SHIELD - CUT AND TAPED

| REF DWG NO. | DRAWING TITLE |
|---|---|
| 95X-5900-N-00190 | PIPING AND INSTRUMENTATION DIAGRAM WELL No'S. EW-18, EW-19, EW-20, EW-21, EW-22 & EW-23 |
| 95X-5900-E-00239 | PANEL SCHEDULES |
| 95X-5900-E-00242 | CABLE SCHEDULE |
| 95X-5900-E-00270 | CABLE SCHEDULE |
| 95X-5900-N-00273 | CONTROL SYSTEM ARCHITECTURE |
| | |
| 95X-5500-X-02002 | DRAWING INDEX |
| 95X-5500-E-02033 | CABLE SCHEDULE |
| 95X-5500-E-02034 | CABLE SCHEDULE |
| 95X-5500-E-02035 | CABLE SCHEDULE |
| 95X-5500-N-02041 | PIPING AND INSTRUMENTATION DIAGRAM SYMBOLS AND LEGEND |
| 95X-5500-N-02042 | CONTROL SYSTEM ARCHITECTURE |
| 95X-5500-E-02044 | PIPING AND INSTRUMENTATION DIAGRAM WELL No'S. 1, 2 & 3 |

PRELIMINARY

000037

| NO. | REVISIONS | DATE | DWN. BY | APPD. | NO. | REVISIONS | DATE | DWN. BY | APPD. | REF. DWG. NO. |
|---|---|---|---|---|---|---|---|---|---|---|
| | | | | | A | ISSUED FOR ENGINEERING REVIEW | 4-0 | NWD | | 95X-5500-X-02002 |

NOTE: FLUOR FERNALD CADD DRAWING, DO NOT REVISE MANUALLY.

CONFIGURATION MANAGEMENT DRAWING

COGNIZANT ENGINEER DATE

APPROVALS: CIVIL & STR., ELECTRICAL, ENGINEER, INSTRUMENT, MECHANICAL, CHECKED, APPROVED, SAFETY ENG., MAINTENANCE, FIRE PROTECT., WASTE MANAGE., SECURITY, PROJECTS

Fernald Environmental Management Project

FLUOR FERNALD, INC.

U.S. DEPARTMENT OF ENERGY

ARWWP — SITE

WASTE STORAGE AREA EXTRACTION SYSTEM PHASE I, AND SFES SUPPLEMENTAL WELL INSTRUMENTATION INTERCONNECTION DIAGRAM WELL HOUSE DCS PCS

RES 428 — DATE APRIL 6, 2000 — DRAWN M.W.CORROUGH

95X-5500-N-02045 A

FILE NAME: /res428/95xn2045.dgn

95xn2045.m schw0542 Wednesday April 11 2001 at 11:51:24 AM EDT