Department of Energy
Ohio Field Office
Fernald Environmental Management Project
P. O. Box 538705
Cincinnati, Ohio 45253-8705
(513) 648-3155

APR 15 2003

Mr. Gene Jablonowski, Remedial Project Manager
United States Environmental Protection Agency
Region V, SRF-5J
77 West Jackson Boulevard
Chicago, Illinois 60604-3590

DOE-0326-03

Mr. Tom Schneider, Project Manager
Ohio Environmental Protection Agency
401 East 5th Street
Dayton, Ohio 45402-2911

Dear Mr. Jablonowski and Mr. Schneider:

REVISED REMEDIAL DESIGN PACKAGE FOR SILOS 1 AND 2 REMEDIATION FACILITY

References:
1. Letter, T. Schneider to J. Reising, "Comments - Silos 1 and 2 Remediation Facility Draft Remedial Design Package," dated March 7, 2003
2. Letter, G. Jablonowski to J. Reising, "USEPA Review of the Draft Remedial Design Package for the Silos 1 and 2 Remediation Facility," dated February 20, 2003
3. DOE Letter, DOE-0144-03, J. Reising to G. Jablonowski and T. Schneider, "Draft Remedial Design Package for the Silos 1 and 2 Remediation Facility," dated December 19, 2002

The purpose of this letter is to transmit the revised Remedial Design Package for Silos 1 and 2. The document was revised in response to comments received from the United States Environmental Protection Agency (USEPA) and Ohio Environmental Protection Agency (OEPA).

The following documentation is enclosed with this transmittal:

1. A Response to Comments Document providing responses to the referenced comments from the USEPA and OEPA.
2. Supplemental electrical, Heating, Ventilation and Air Conditioning (HVAC), and Piping and Instrumentation Diagram (P&ID) drawings requested by the USEPA to facilitate their review of the Remedial Design Package.

Recycled and Recyclable

3. A draft Final RD Package incorporating the responses to the USEPA and OEPA comments.

The enclosed documentation is due to the USEPA and the OEPA by April 17, 2003.

If there are any questions concerning the enclosed documentation, please contact Nina Akgündüz at (513) 648-3110.

Sincerely,

Johnny Reising

FCP:Hall

Johnny W. Reising
Fernald Remedial Action
Project Manager

Enclosure: As Stated

cc w/enclosure:
N. Akgündüz, OH/FCP
G. Brown, OH/FCP
J. Hall, OH/FCP
J. Saric, USEPA-V, SR-6J
T. Schneider, OEPA-Dayton (three copies of enclosure)
M. Cullerton, Tetra Tech
M. Shupe, HSI GeoTrans
R. Vandegrift, ODH
AR Coordinator, Fluor Fernald, Inc./MS78

cc w/o enclosure:
R. Greenberg, EM-31/CLOV
S. Robison, EM-31/CLOV
S. Beckman, Fluor Fernald, Inc./MS52-4
D. Carr, Fluor Fernald, Inc./MS1
R. Corradi, Fluor Fernald, Inc./MS52-4
T. Hagen, Fluor Fernald, Inc./MS1
D. Nixon, Fluor Fernald, Inc./MS65-2
D. Thiel, Fluor Fernald, Inc./MS52-2
T. Walsh, Fluor Fernald, Inc./MS52-3
ECDC, Fluor Fernald, Inc./MS52-7

RESPONSES TO
"TECHNICAL REVIEW COMMENTS ON
SILOS 1 AND 2 REMEDIATION FACILITY
DRAFT REMEDIAL DESIGN PACKAGE"
FERNALD ENVIRONMENTAL MANAGEMENT PROJECT

GENERAL COMMENTS

Design Criteria Package

1. Commenting Organization: U.S. EPA Commentor: Jablonowski
Sections: NA Page #: Not Applicable (NA) Line #: NA
Original General Comment #: 1
Comment: While U.S. EPA supports the United States Department of Energy's (DOE) efforts to expand its transportation and disposal options for the Silos Project, the tasks required to facilitate disposal of treated Silos 1 and 2 material at a Permitted Commercial Disposal Facility (PCDF) have yet to be completed. These tasks include: 1) U.S. EPA approval of an Explanation of Significant Difference (ESD) document that accommodates disposal of treated Silos 1 and 2 material at a PCDF; 2) DOE and the Nuclear Regulatory Commission (NRC) entering into a Memorandum of Agreement (MOA) that will allow Silos material disposal at a PCDF as 11(e)(2) byproduct material; and 3) modification of a PCDF's permits to allow disposal of treated Silos 1 and 2 material. Even with an ESD that can accommodate Silos material disposal at a PCDF, there are still uncertainties related to whether a PCDF will ultimately become available for that purpose. Also, it is not clear whether an intermodal facility currently exists that can accommodate treated Silos 1 and 2 material if intermodal transportation to NTS was needed.

While the RD Package could accommodate either direct rail shipment to a PCDF or intermodal shipment to NTS, it should also ultimately accommodate direct truck shipment to NTS consistent with: 1) the Record of Decision Amendment for Silos 1 and 2; 2) recent discussion amongst DOE and the regulators with regard to maintaining contingencies; and 3) maintaining a transportation and disposal option that is known to be implementable for treated Silos 1 and 2 material.

Response: As has been discussed with the U.S. EPA, the design reflected in the current RD Package can be implemented with disposal at the NTS via either direct truck or intermodal transportation. Section 1.3 of the RD Package states " If transportation by truck is chosen as the final transportation mode, the infrastructure provided by this RD package would be unaffected. The railcar loading facility is designed to accommodate both railcars and trucks." The tracks in the railcar loading facility are installed flush with the floor level so that the facility can be used, without modification, to load trucks. The disposal container design currently being finalized is specified to be useable for either truck or rail shipment. Customized railcars and trucks are currently being designed.

Action: Additional detail documenting the ability of the current design to support direct truck shipment has been added to Sections 2.2.3 and 2.4 of the RD Package. Consistent with the approved Silos 1 and 2 Remedial Design Work

Plan, details concerning the onsite packaging, staging, and offsite shipment of treated Silos 1 and 2 material to the selected disposal facility(s)will be documented in the Transportation and Disposal Plan, to be submitted for U.S. EPA review and approval as a deliverable under the RA Work Plan.

2. Commenting Organization: U.S. EPA Commentor: Jablonowski
Sections: NA Page #: Not Applicable (NA) Line #: NA
Original General Comment #: 2
Comment: As discussed in the text, one of the primary goals associated with the selected remedy for Silos 1 and 2 material is to address characterization and facility acceptance criteria for off-site disposal. Since the remedial design package discusses a mechanism to meet these goals, additional information should be provided to ensure these goals can be met. While reference is made to achieve acceptance at the Nevada Test Site (NTS), other disposal facilities (such as Envirocare of Utah) are also considered. However, it is not clear how specific acceptance criteria will be met for either of these facilities. If parameters associated with the Silos 1 and 2 final waste forms have the potential to exceed current facility acceptance criteria, some discussion regarding variances, conditional approval, or special arrangements should be provided. For example, NTS specifies a radium-226 action level of 3.6E+07 Becquerel per cubic meter (Bq/m^3) of waste. This value would equate to 36 Bq/cm^3. Considering that Silos 1 and 2 final waste form densities would be about 1.5 g/cm^3, would result in a final normalized action level of about:

Therefore, if final waste form activities exceed this value for radium-226, some discussion regarding NTS variance is warranted. Although the current action levels for NTS may be exceeded, an evaluation would be performed by NTS personnel to ensure that disposal cell limits are not exceeded.

Along the same lines, it is not clear that acceptance criteria for any LLW disposal facility would be met. Considering that LLW disposal facilities must meet certain requirements for radon flux out of the disposal area, additional consideration of the final waste form and compliance should be provided. Since the remedial design package fails to identify a single disposal facility for the final waste form, it is not clear that Silos 1 and 2 wastes have a final path to disposal. Additional information should be provided or referenced in the text discussing how the cement-stabilized wastes will meet certain isotopic requirements of the intended disposal facility.

Response: The radionuclide "action levels" specified by the NTSWAC are levels which trigger NTS review of the specific waste form and disposal configuration by NTS to confirm that the limits imposed by the disposal facility performance assessment are met. Informal review by NTS personnel of draft waste profile information for chemically stabilized Silos 1 and 2 material has indicated that the material will meet all criteria for disposal at the NTS, including physical and chemical criteria, radionuclide concentration levels, and radon flux requirements.

Action: The final waste acceptance process at the selected disposal facility will consist of review and formal approval of the waste profile, based upon the final waste form and packaging configuration. This process will confirm the packaging, certification, and treated waste sampling and analysis requirements for acceptance of the waste at the selected facility. Consistent with the approved Silos 1 and 2 Remedial Design Work Plan, these details will be documented in the Transportation and Disposal Plan and treated waste Sampling and Analysis Plan, to be submitted for U.S. EPA review and approval as deliverables under the RA Work Plan.

3. Commenting Organization: U.S. EPA Commentor: Jablonowski
Sections: NA Page #: Not Applicable (NA) Line #: NA
Original General Comment #: 3
Comment: The text provides some discussion regarding radiological sampling and analysis of the waste materials both during processing (slurry) and as a final waste form (cement-stabilized waste). However, there is some ambiguity as to what analytical method(s) will be used to radiologically characterize the waste material. The Sampling and Analysis Plan (SAP) for the Silos 1 and 2 Remediation Facility Project state that the slurry and stabilized waste forms will be analyzed using gamma spectroscopy for a suite of radionuclides. However, Table 4-1 of the SAP provides analysis (i.e. radiochemical) in addition to gamma spectroscopy. The text should more clearly present the radio-analytical methods that will be used.

If gamma spectroscopy is the only intended radio-analytical method, there is some concern that proper radionuclide characterization will be compromised. The text states that gamma spectroscopy will be able to identify the energy of specific gamma peaks and quantify the concentrations of radionuclides (e.g. protactinium-231, radium-226, thorium-228, thorium-230, thorium-232, uranium-234, and uranium-235). However, based on the gamma emission from these nuclides, it is doubtful that they all can be quantified accordingly through this method alone. Radium-226 emits a 186 keV photon with an intensity of about 3.3%. Considering that U-235 emits a photon at 185 keV (54% intensity), there is concern these peaks would not be discernable. Typically, accurate radium-226 measurement relies either on radiochemical separation followed by alpha spectroscopy or allowing secular equilibrium to be established and analyzing through gamma spectroscopy. In the case with gamma spectroscopy the sample is placed in a sealed container and radium-226 is allowed to reach secular equilibrium with its daughters (this usually takes about 21 days). Once this is achieved, radium-226 is quantified based on the level of lead-214 that has grown in.

Th-230 and U-234 emit very low energy photons with low intensities that could not allow identification and quantification through gamma spectroscopy, as well. Considering that some degree of secular equilibrium would exist between the natural thorium and uranium daughter chains, many radionuclides will be present resulting in a high Compton edge introducing additional uncertainty.

It is suggested that a process knowledge evaluation first be conducted in which potentially reportable nuclides (i.e. those contributing greater than 1% of the total activity) be presented. Then a comprehensive sampling plan should be developed explaining how analysis will be conducted for the purposes of radiological characterization. In this regard, specific radioanalytical methods should be defined. It is suggested that isotopic uranium (U-234, 235, 238), isotopic thorium (Th-228, 230, 232) and radium-226 be analyzed through alpha spectroscopy. All other reportable nuclides should be inferred from gamma spectroscopy and/or secular relationships.

Response: Comment acknowledged. Final sampling and analysis requirements (i.e., use of process knowledge vs. sampling and analysis, number/frequency of analyses and necessary analytes) for treated Silos 1 and 2 material will be negotiated with the selected disposal facility(s). Consistent with the approved Remedial Design Work Plan, these requirements will be documented in a treated waste Sampling and Analysis Plan, submitted for U.S. EPA and OEPA approval as a Remedial Action (RA) deliverable.

Action: Treated waste sampling and analysis requirements will be submitted for U.S. EPA and OEPA approval in accordance with the RA Work Plan. Specific discussion of these requirements will be removed from the RD Package.

4. Commenting Organization: U.S. EPA Commentor: Jablonowski
Sections: NA Page #: Not Applicable (NA) Line #: NA
Original General Comment #: 4
Comment: It is conceivable that appreciable quantities of secondary waste streams will be generated through treatment of Silos 1 and 2 material (i.e. PPE, HEPA filter media, contaminated equipment). No discussion for characterization of these items has been provided. The SAP should be expanded to include discussion for all waste streams/items generated through the treatment process.

Response: Management of secondary waste is discussed in Section 6.4, and Appendix B-5, of the RD Package. In accordance with site procedures, potential secondary waste streams will be identified, along with their estimated generation rates, waste characterization (based upon process knowledge), and disposition plans, on a Project Waste Identification and Disposition (PWID) document prior to initiation of operations.

Action: The above details will be added to Section 6.4 of the RD Package

5. Commenting Organization: U.S. EPA Commentor: Jablonowski
Sections: NA Page #: Not Applicable (NA) Line #: NA
Original General Comment #: 5
Comment: Discussion is provided that indicates rail will be the transport mode used to ship the waste for disposal. However, if wastes are to be sent to NTS shipment via truck is necessary for receipt at the site. If shielded gondola cars are necessary for rail, it is not clear how transportation requirements will be met if shipment to NTS is selected. Additional information should be provided to discuss the necessary preparation if wastes are to be transported by truck.

Response: The packaging and transportation infrastructure reflected in the RD Package is designed to accommodate both rail (direct rail or intermodal) and direct truck transportation. Section 1.3 of the RD Package states "If transportation by truck is chosen as the final transportation mode, the infrastructure provided by this RD package would be unaffected. The railcar loading facility is designed to accommodate both railcars and trucks." The tracks in the railcar loading facility are installed flush with the floor level so that the facility can be used, without modification, to load trucks. The disposal container design currently being finalized is specified to be useable for either truck or rail shipment. The design of customized railcars and trucks (including the shielding required to meet transportation requirements) is currently being finalized.

Action: Consistent with the approved Silos 1 and 2 Remedial Design Work Plan, details concerning the onsite packaging, staging, and offsite shipment of treated Silos 1 and 2 material to the selected disposal facility(s)will be documented in the Transportation and Disposal Plan, to be submitted for U.S. EPA review and approval as a deliverable under the RA Work Plan.

6. Commenting Organization: U.S. EPA Commentor: Jablonowski
Sections: NA Page #: NA Line #: NA
Original General Comment #: 6
Comment: Some sections of this document state that material from Silos 1 and 2 will be stabilized to attain the Nevada Test Site (NTS) waste acceptance criteria (WAC). Other sections state that the stabilized material will be shipped to an appropriately licensed off-site disposal facility. It is not clear if the NTS's WAC are the same as WAC at the other appropriately licensed off-site disposal facilities. It may be advisable to select the disposal facility prior to treatment and stabilization of the material from Silos 1 and 2. The text should be revised to address this issue.

Response: Stabilization of metals present in Silos 1 and 2 material is driven by the requirements of the Silos 1 and 2 ROD Amendment, rather than by disposal facility WAC. The NTS has confirmed that their WAC would allow disposal of Silos 1 and 2 material without treatment for metals.

Action: Selection of the facility(s) to be utilized for disposal of Silos 1 and 2 material, as well as finalization of WAC demonstration requirements, will be completed and documented in RA deliverables prior to initiation of treatment operations.

7. Commenting Organization: U.S. EPA Commentor: Jablonowski
Sections: NA Page #: NA Line #: NA
Original General Comment #: 7
Comment: A number of sections in this document refer to potential use of other stabilization chemicals for K-65 material. The treatability study shows that the only materials required for stabilization are polymer, cement, and fly ash. The text should be revised to clarify how these other stabilization chemicals will be selected and what the dosage rates will be.

Response: The other chemicals referenced in this comment refer to chemicals considered for use as settling and flocculation agents or to enhance stabilization of metals. Treatability studies for Flocculation have shown that Nalco 7768 is effective as a settling agent with no additional additives. During the studies, additional polymers, Alum , Ferric Sulfate and Lime were also considered as flocculation agents. During the Stabilization study, phosphoric acid and trisodium phosphate were considered in addition to cement and fly ash as stabilization agents. Although chemical mixing, and reaction tanks remain in the design as a contingency, there are no current plans to utilize this equipment. If the use of additional flocculation or stabilization agents were to become necessary during operations, the addition rates for the additives would be determined at that time. In summary, a general purpose chemical addition system has been left in the design as a contingency for unforseen conditions.

Action: N/A

8. Commenting Organization: U.S. EPA Commentor: Jablonowski
Sections: NA Page #: NA Line #: NA
Original General Comment #: 8
Comment: The text states in a number of places that the tanks used for chemical stabilization will be contained in a concrete vault to protect workers from gamma radiation. The text should clarify how these workers will be protected when they enter these tanks to clear clogs. Heavy, abrasive slurries cause many handling problems. Double handling of slurries should be avoided. The text should address these potential problems and include procedures to minimize associated risks.

Response: The slurry receipt tanks, clarifier, and slurry feed tanks are all contained in concrete vaults. The plan is that these tanks will not be entered by personnel. The pumps, piping, and other equipment likely to require maintenance are located in pump galleries that are separate from the tank vaults. Any personnel entering the pumping gallery will be clothed in anti contaminant clothing and utilizing proper protective equipment. Piping and pumps will be flushed out when not in use. Provisions exist for back flushing and forward flushing of tanks and pumps. If a blockage does occur, which can not be removed with flushing, local shielding will be utilized when opening the line.

Action: N/A

9. Commenting Organization: U.S. EPA Commentor: Jablonowski
Sections: 1 through 3 Page #: NA Line #: NA
Original General Comment #: 9
Comment: Carbon steel is specified for the slurry receipt tanks, piping, and slurry feed tanks. Consideration should be given to the compatibility of the K-65 slurry with carbon steel in accordance with Nuclear Regulatory Commission (NRC) guidance. In addition, the text gives only one pH value of 7.52 for the K-65 slurry. Additional pH values should be provided to allow a more accurate compatibility analysis. The text should be revised as needed to address these compatibility issues.

Response: Based on pH measurements from the treatability study reports(7.5-9.5), as well as the corrosivity rate published in Jacobs' Design Basis and Requirements Document, there is no compatibility issue using carbon steel. Carbon Steel piping was also successfully utilized to fill Silos 1 & 2

Action: N/A

10. Commenting Organization: U.S. EPA Commentor: Jablonowski
Sections #: 2 and 3 Page #: NA Line #: NA
Original General Comment #: 10
Comment: The K-65 slurry will be monitored for density, radiation level, and pH during the stabilization process. Given the amount of heat that will be generated during this process, the text should be revised to include monitoring of the slurry temperature at critical points in the process. Section 2.1.3.7 states that thermocouple-type sensors will be used to monitor temperature but does not state where in the processor feed system they will be located. Consideration should be given to adding temperature gauges at critical locations where slurry temperatures are at a minimum or maximum. The text should be revised as needed.

Response: Treatability study results showed only a minimal temperature rise during the grout mixing and curing process. However, temperatures are monitored in the Slurry Receipt Tanks and the Slurry Feed Tanks. These sensors are shown on the Piping and Instrumentation drawings which have been included in the attachment to this Response to Comments Document.

Action: N/A

11. Commenting Organization: U.S. EPA Commentor: Jablonowski
Section #: 2 Page #: NA Line #: NA
Original General Comment #: 11
Comment: Because of the heat and steam that will be generated from adding dry cement to the slurry, the steam and off-gases may require pretreatment prior to discharge to the Radon Control System (RCS). The text should be revised to address this issue.

Response: The off-gases from the Product Mixer will be connected to a wet scrubber system for the removal of particulate prior to being discharged to the RCS system. The exhaust stream will not contain steam or excessive heat. The wet scrubber is discussed in section 2.1.8, Vessel Vent System. The gases will pass through a chiller when entering the RCS System

Action: N/A

12. Commenting Organization: U.S. EPA Commentor: Jablonowski
Section #: 2 Page #: NA Line #: NA
Original General Comment #: 12
Comment: Secondary containment is provided for slurry receipt, polymer, cement, and fly ash tanks, but secondary containment is not provided for the product mixing tanks or reaction/polymer tank. The text should be revised to discuss measures that will be taken to contain potential releases from these tanks.

Response: Secondary Containment is provided for the product mixers and the reaction/polymer tanks. These containment areas will drain to sumps provided in each of these areas. The Sump system is described in section 2.1.6.2.

Action: N/A

13. Commenting Organization: U.S. EPA Commentor: Jablonowski
Section #: 4.2 Pages #: 51 through 53 Line #: NA
Original General Comment #: 13
Comment: Section 4.2 states that flocculation studies were conducted to optimize the design of the clarifier to "produce 30-percent solids slurry or more." The text should clarify if this material can be readily pumped without causing major maintenance problems and if any pump testing has been performed to verify that the 30-percent solids slurry will not impede the stabilization process. In addition, Section 3.2 implies that the slurry concentration may need to be reduced in order to meet the process objectives in Section 3.1, which includes radiation limits set by the U.S. Department of Transportation (DOT); therefore, it may be advisable to reduce polymer dosage rather than add dilution water to the slurry feed tanks. Slurry with lower solids content will reduce wear on pipelines, pumps, and other equipment.

Response: Section 4.2 is a discussion of the results of bench-scale flocculation studies. The pumpability of slurries is currently being studied in separate pilot-scale studies. All previous work, including the Vitrification Pilot Plant, indicates that 30% solids can be easily pumped with proper piping configurations and will not impede the stabilization process. If the slurry concentration needs to be reduced, this will be accomplished primarily by increasing the flow rate from the bottom of the clarifier. Water would be added to a slurry feed tank only as a temporary fix until the clarifier is lined out. The polymer addition rate will be adjusted as appropriate.

Action: N/A

14. Commenting Organization: U.S. EPA Commentor: Jablonowski
Appendix #: C Page #: NA Line #: NA
Original General Comment #: 14
Comment: Revision A of the sampling and analysis plan (SAP) states that wastewater from the remediation stabilization process will be treated at the Advanced Wastewater Treatment plant (AWWTP). The weekly conference call agenda for the week of January 20, 2003, stated that the AWWTP was having trouble meeting its discharge requirement of 30 parts per billion (ppb) for uranium and that "no stormwater or remediation wastewater can be treated under the scenario required to meet the 30 ppb standard." The SAP should therefore be revised to include alternatives to wastewater treatment at the AWWTP.

Response: The referenced quote from the conference call agenda refers to a specific situation during January 2003 when USEPA and OEPA were briefed on actions being taken by the Aquifer Restoration and Wastewater Project (ARWWP) in order to meet the 2003 monthly average uranium concentration. ARWWP has confirmed their ability to manage the wastewater expected to be generated from Silos 1 and 2 Remediation Facility operations. Wastewater will be analyzed and discharged, in coordination with other streams as described.

Action: N/A

Drawings

15. Commenting Organization: U.S. EPA Commentor: Jablonowski
Drawing #: HVAC drawings Line #: NA
Original General Comment #: 15
Comment: The HVAC drawings included in this submittal do not indicate locations of motorized dampers, manual dampers, controls, or duct sizes. Section 2.3.2.3 also indicates interlocks with door switches, pressure monitors, and other equipment not shown on the drawings. The submittal should be revised to include a complete set of drawings showing the entire system and all its controls.

Response: The drawings included in the draft RD Package were selected based upon the understood scope of USEPA's review, consistent with previous RD package submittals. The entire set of drawings (piping, mechanical, instrumentation, electrical, structural) the Silos 1 & 2 project consists of over 2200 drawings.

Action: The P&ID's and selected layout drawings for the HVAC system are attached to this Response to Comments Document to facilitate U.S. EPA review of the Silos 1 & 2 Remedial Design Package.

16. Commenting Organization: U.S. EPA Commentor: Jablonowski
Drawing #: Electrical drawings Line #: NA
Original General Comment #: 16
Comment: No electrical drawings are included in this submittal. The electrical drawings should be provided to allow a proper review.

Response: Comment acknowledged.

Action: Appropriate electrical one-line drawings are attached to this Response to Comments Document to facilitate U.S. EPA review of the Silos 1 & 2 Remedial Design Package

17. Commenting Organization: U.S. EPA Commentor: Jablonowski
Drawing #: Mechanical drawings Line #: NA
Original General Comment #: 17
Comment: The mechanical drawings do not include piping or piping equipment such as valves, flow and density meters, and pressure and temperature gauges. In addition, no process and instrumentation drawings (P&ID) are included. The resubmittal should include all the pertinent drawings to facilitate proper review.

Response: The drawings included in the draft RD Package were selected based upon the understood scope of USEPA's review, consistent with previous RD package submittals. The entire set of drawings (piping, mechanical, instrumentation, electrical, structural) for the Silos 1 & 2 project consists of over 2200 drawings.

Action: Appropriate P&ID's are attached to this Response to Comments Document to provide the necessary detail concerning instrumentation and controls and facilitate review of the RD Package by the U.S. EPA.

SPECIFIC COMMENTS

Design Criteria Package

18. Commenting Organization: U.S. EPA Commentor: Jablonowski
Sections #: 1.3 Page #: 6 Lines #: 7 through 10
Original Specific Comment #: 1
Comment: The text states that the treatability study shows that the only materials required for stabilizing K-65 material are polymer, cement, and fly ash. The text further states that additional piping systems are included to allow addition of other chemicals at various points in the process. The text should clarify what other chemicals are required for K-65 stabilization, and the associated piping system sizes and piping materials selected.

Response: The other chemicals referenced refer to chemicals considered for use as settling and flocculation agents or to enhance the stabilization of metals. Treatability studies for Flocculation have shown that Nalco 7768 is effective as a settling agent with no additional additives. During the studies, additional polymers, Alum , Ferric Sulfate and Lime were also considered as flocculation agents. During the Stabilization study, phosphoric acid and trisodium phosphate were considered in addition to cement and fly ash as stabilization agents. Although chemical mixing, and reaction tanks remain in the design as a contingency, there are no current plans to utilize this equipment. If the use of additional chemicals became necessary, the addition rates for additional chemical additives would be determined at that time. The text in Section 1.3 is explicit that only Polymer, cement and fly ash will be added. The chemical addition system has been left in the design as a contingency for unforseen conditions

Action: N/A

19. Commenting Organization: U.S. EPA Commentor: Jablonowski
Section #: 1.3 Page #: 7 Lines #: 1 through 4
Original Specific Comment #: 2
Comment: The text states that the additives will be added in the reaction tank and polymer will be added in the polymer addition tank, implying the use of two separate tanks. The text should be revised to clearly indicate how many tanks will be used in this process. Figure 1-1 on page 6 indicates that the reaction/polymer tank is one unit and also shows chemical additives being added at several stages of the chemical stabilization process, including the slurry feed tanks, slurry receipt tanks, and product mixers. The text or figure should be revised as needed to resolve this inconsistency.

Response: The reaction tank and polymer tank are two separate tanks in function, but are closely conjoined in physical layout and are being fabricated as one unit. The reaction tank is designed for the addition of flocculating agents such as alum or lime that are not being utilized in the current process. The reaction tank has been included in the process flow as a contingency. Slurry will flow from the receipt tanks, through the reaction tank and into the polymer tank.

Action: Section 1.3 has been expanded to better explain process flow.

20. Commenting Organization: U.S. EPA Commentor: Jablonowski
Section #: 2.1 Page #: 8 Line #: 37
Original Specific Comment #: 3
Comment: The text should be revised to explain how the 5 to 10 feet per second critical transport velocity was calculated for a 30-percent solids slurry. The slurry velocity is stated as a general design guideline for all piping. However, the solids content of the slurry ranges from 15 percent to 30 percent solids through the stabilization process. Typically, a 15-percent solids slurry requires a much higher transport velocity to prevent settling of solids. Slurry with a solids content of 30 percent is transported at a much lower velocity because of the use of positive displacement pumps. The pipe design should consider the percent solids in the slurry when determining the critical transport velocity.

Response: The actual critical velocities for both 15 percent and 30 percent solids slurries are expected to be significantly lower than the 5 to 10 ft/sec range specified as a criterion for the Silos 1 and 2 design. The 5 to 10 ft/sec criterion was specified to provide a range comfortably above the critical velocity based on sound engineering practice. A 30% slurry is still quite thin and requires about the same velocity as a 15% slurry to maintain solids suspension. If operations allow greater than 30% slurries to be processed, velocities may be reduced if dictated by pressure drop, pump power draw, or production logistical considerations.
Action: N/A

21. Commenting Organization: U.S. EPA Commentor: Jablonowski
Section #: 2.1 Page #: 8 Line #: 38
Original Specific Comment #: 4
Comment: The second item of the general design guidelines states that double-contained pipe will be used in outdoor areas. It may be advisable to specify that double-walled pipe will be used throughout the facility. Additionally, the text should be revised to explain how outdoor pipes will be kept from freezing.

Response: Double contained pipe is utilized in outdoor areas to provide containment in case the primary carrier line ruptures. For indoor areas, the piping is contained in piping vaults and the building itself acts as the secondary containment. Building Sumps will return spilled materials to the slurry feed tanks or the supernatant tanks to be reprocessed. Outdoor piping will be freeze protected through the use of heat tracing and insulation. The heat tracing will be provided with emergency backup power.

Action: The referenced section will be revised to indicate the use of heat tracing and insulation on the outdoor piping.

22. Commenting Organization: U.S. EPA Commentor: Jablonowski
Section #: 2.1.1 Page #: 9 Line #: 14
Original Specific Comment #: 5
Comment: The text states that 5 to 15 percent solids materials from Silos 1 and 2 will be pumped at approximately 350 gallons per minute (gpm) from the transfer tank area (TTA) to slurry receipt tanks. Section 1.3, Page 6, Line 17, states that 15 percent solids materials from Silos 1 and 2 will be pumped at approximately 350 gpm. The text should be revised to resolve this discrepancy.

Response: The target solids percent is 15%. The range of solids is 5 - 15%.

Action: The text of Section 1.3 will be revised to reflect the 5-15% range.

23. Commenting Organization: U.S. EPA Commentor: Jablonowski
Section #: 2.1.1 Page #: 9 Lines #: 27 through 33
Original Specific Comment #: 6
Comment: The paragraph states that each slurry receipt tank will complete one filling and emptying cycle in 36 hours. The text should clarify the volume or flow rate, and explain how the volume or flow rate will be measured, and indicate the total volume of each tank.

Response: The volume of the slurry receipt tanks is 83,800 gallons as stated in section 2.1.1. The flow rate is variable based on solids of the slurry received, clarifier settling, and production rates in the product mixing area. Flow is measured by a flow meter installed on the discharge of the receipt tank slurry pump. The flowmeter is described in Section 2.1.1.7 The slurry pump is variable speed to allow variation of flow rates. The pumps are described in section 2.1.1.3. This area of the process is defined on P&ID's 94X-3900-N-01165 through 94X-3900-N-01167.

Action: These P&ID's are attached to this Response to Comments Document.

24. Commenting Organization: U.S. EPA Commentor: Jablonowski
Section #: 2.1.1.3 Page #: 10 Lines #: 31 through 33
Original Specific Comment #: 7
Comment: The last sentence of Paragraph 3 states personnel access to the slurry transfer pumps will be limited for monitoring and maintenance. The text should clarify how these pumps and associated piping will be shielded to protect workers performing monitoring and maintenance activities.

Response: All piping and pumps will be flushed prior to personnel entry into the receipt pump gallery. If the pumps or piping must be opened for maintenance purposes, additional local shielding will be utilized. Section 2 is a discussion of the Equipment and systems being installed. Personnel safety and shielding procedures are discussed in detail in Section 8- Safety and Health Plan.

Action: N/A

25. Commenting Organization: U.S. EPA Commentor: Jablonowski
Section #: 2.1.1.4 Page #: 10 Lines #: 41 through 43
Original Specific Comment #: 8
Comment: The text states that "under manual operation, a manual position switch is installed for correct valve alignment." The text should be revised to explain the function of the manual position switch. It is not clear how this will work. Typically, three-way valves are equipped with limit switches that provide contact to indicate remotely the valves' position. The limit switches work if the valve is operated in automatic or manual mode.

Response: The manual position switch is a pointer which allows the operator to know the valve position when he is physically at the valve. The valve does have limit switches which will send a valve position signal to the control panel.

Action: N/A

26. Commenting Organization: U.S. EPA Commentor: Jablonowski
Section #: 2.1.1.6 Page #: 11 Lines #: 21 through 31
Original Specific Comment #: 9
Comment: This section states that slurry samples will be collected using an isolock-type sampler inside a glove box. The text should be revised to state how the sample will be decontaminated and how the required tests will be performed while ensuring worker health and safety.

Response: The isolock sampler is in the sampling glovebox. Adjacent to the sampling glovebox is the analysis glovebox. The sample is analyzed in this glovebox and the worker exposure to the sample is minimized. Appendix 3 includes a draft Sampling and Analysis Plan for this project. Section 4.1.1 of the Sampling and Analysis Plan includes this explanation.

Action: N/A

27. Commenting Organization: U.S. EPA Commentor: Jablonowski
Section #: 2.1.1.7 Page #: 11 Line #: 45
Original Specific Comment #: 10
Comment: The text states that slurry density is measured at a point in the recycle loop using a "densitometer." Paragraph 2.1.1.6 states that slurry samples will be collected to determine the total percent solids to determine additive requirements. It is not clear why the densitometer and flow meter will not be used to control the polymer dosage rate. This system can adjust the dosage rate to the actual density and flow variation and therefore minimize chemical usage. The text should be revised as needed to address this issue.

Response: The densitometer and flow meter will be utilized for the day to day and minute to minute control of the process. The sampling described in Section 2.1.1.6 will be utilized for calibration of the instruments and ongoing quality assurance. The sampling will be reduced as increasing process control is established. This is discussed in the process control plan in Section 3.3.1.3 Quality Control Testing

Action: N/A

28. Commenting Organization: U.S. EPA Commentor: Jablonowski
Section #: 2.1.1.8 Page #: 12 Lines #: 10 through 15
Original Specific Comment #: 11
Comment: The text discusses flushing of the slurry discharge line, slurry transfer line, and sampling lines; however, flushing of the slurry pump's suction line is not discussed. The text should be revised to explain if the slurry pump suction line will be flushed and where flush water will be discharged.

Response: As stated in the text, there is a flush water line routed to the suction side of each slurry pump. This line will flush the tank discharge line (pump suction) through the pump. Flush water clearing the pump suction will backflow into the slurry receipt tank. When flushing through the pump, flush water will be routed depending on valve lineup to either the clarifier, the slurry receipt tank or the sumps.

Action: N/A

29. Commenting Organization: U.S. EPA Commentor: Jablonowski
Section #: 2.1.2 Page #: 12 Lines #: 21 through 26
Original Specific Comment #: 12
Comment: The text does not indicate the retention time in the "reaction/polymer addition tank" or which other chemical additives may be used. The text should be revised to address these issues.

Response: The reaction tank has a capacity of 1,100 gallons as stated in section 2.1.2.2, and the polymer tank has a capacity of 400 gallons as stated in the same section. The system flow is variable so a fixed retention time is not meaningful. At a nominal flow of 78 gpm, the retention time would be 14 minutes for the reaction tank and 5 minutes for the polymer tank. See responses to specific questions 1 and 2 for discussion of other chemical additives.

Action: N/A

30. Commenting Organization: U.S. EPA Commentor: Jablonowski
Section #: 2.1.2.1.1 Page #: 12 Lines #: 38 through 47
Original Specific Comment #: 13
Comment: This section describes the polymer system. It is not clear why the polymer solution will be prepared in two 500- gallon polymer feed tanks from neat polymer. The polymer solution would sit in the tanks for more than 6 hours before being used up. Systems are available that can pump neat polymer, mix it with water to the desired concentration, age it in an internal chamber, and deliver it, on demand, at the proper concentration and dosage rate. These systems can also be controlled by an outside signal from flow meters and/or density meters. The text should be revised to explain why the large polymer solution feed tanks will be used.

Response: The polymer preparation system was chosen for its simplicity. It also provides adequate storage to allow aging of the polymer and working inventory to cover an operating shift.

Action: N/A

31. Commenting Organization: U.S. EPA Commentor: Jablonowski
Section #: 2.1.2.1.1 Page #: 12 Lines #: 45 and 46
Original Specific Comment #: 14
Comment: The sentence stating that the polymer is "allowed to age" should be revised to state if mixing will occur during the hour that the polymer ages. Allowing the polymer to "age" without mixing may cause problems with material settling out in the polymer tank or problems pumping the polymer to the polymer addition tank due to varying viscosity of the polymer.

Response: It is the intention of the project for polymer solution to be agitated during aging.

Action: This sentence will be revised to reflect agitation of the polymer solution.

32. Commenting Organization: U.S. EPA Commentor: Jablonowski
Section #: 2.1.2.1.2 Page #: 13 Lines #: 8 through 16
Original Specific Comment #: 15
Comment: General Comment No. 2 applies here and should be addressed.

Response: As addressed in General Comment #7 and Specific Comments # 1 and #2, there are no plans to use other chemical additives. The chemical feed systems have been added as a contingency.

Action: A sentence will be added to the end of this section stating "There are no plans at this time to utilize any additional additives."

33. Commenting Organization: U.S. EPA Commentor: Jablonowski
Section #: 2.1.2.1.2 Page #: 13 Lines #: 20 through 32
Original Specific Comment #: 16
Comment: The text states that the reaction/polymer tank is divided into two sections with a baffle, the reaction section and the polymer addition section, each equipped with a variable speed mixer/agitator. The text in Section 2.1.2.1.1 also states that polymer will be added to the polymer addition section of this tank. The text should clarify the function of the reaction section of this tank.

Response: The reaction /polymer tank combination is fairly standard for waste treatment processes. Only polymer is currently planned to be added. The reaction tank is being installed now as a contingency rather then incurring lost time and expense if additional additive would become necessary at a future date.

Action: A sentence will be added to the beginning of section 2.1.2.2 to indicate that the reaction tank is installed as a contingency only.

34. Commenting Organization: U.S. EPA Commentor: Jablonowski
Section #: 2.1.2.3 Page #: 14 Lines #: 1 and 2
Original Specific Comment #: 17
Comment: The first paragraph states that the thickened slurry will be monitored for radiation level and density, and the supernatant water from the clarifier will be monitored for turbidity. The text should be revised to clarify the monitoring equipment that will be used to monitor radiation level, density, and turbidity.

Response: As stated in Section 2.1.1.7, the specific types of instrumentation to be used will be finalized based on results of cold loop testing on the instrumentation at Oak Ridge National Laboratory.

Action: N/A

35. Commenting Organization: U.S. EPA Commentor: Jablonowski
Section #: 2.1.3 Page #: 14 Lines #: 18 through 36
Original Specific Comment #: 18
Comment: The text states that thickened slurry (30 percent solids by weight) will be pumped from the bottom of clarifier to one of three slurry feed tanks. The text should explain why this thickened slurry will be pumped to these large tanks before being pumped to the stabilization mixers. The slurry could be pumped from the clarifier directly to the stabilization mixers, eliminating the need for the slurry feed tanks and its pumps. The 30-percent slurry may cause settling problems in storage tanks, pumps, piping, and valves, and the abrasive material may damage mixing equipment such as impellers and mixer shafts, which could bend under the heavy load. Maintenance could require constant process stoppage and be labor intensive.

Response: The slurry feed tanks are the transition from a continuous process (clarifier) to a batch process (Product mixers). Utilizing three slurry feed tanks provides several process advantages. 1) A deposition point for clarifier sludge is constantly available. 2) Accumulating slurry in the slurry feed tanks allows for sampling and recipe preparation based on homogenous supply of

slurry. The tanks are agitated to maintain homogenous mix and to prevent settling. 3) Production is assured by providing multiple processing units.

Action: N/A

36. Commenting Organization: U.S. EPA Commentor: Jablonowski
Section #: 2.1.3 Page #: 14 Lines #: 21 through 23
Original Specific Comment #: 19
Comment: The slurry feed tanks are contained in a shielded vault not intended for personnel access. The text should be revised to explain how the pumps and associated piping for these tanks will be shielded to provide protection to workers performing monitoring and maintenance activities.

Response: Pumps, most piping, and other equipment likely to require maintenance are located in shielded pump galleries outside the tank vaults. All piping and pumps will be flushed prior to personnel entry into the pump gallery. If the pumps or piping must be opened for maintenance purposes, additional local shielding will be utilized if required. Section 2 is a discussion of the Equipment and systems being installed. Personnel safety and shielding procedures are discussed in detail in Section 8- Safety and Health Plan.

Action: N/A

37. Commenting Organization: U.S. EPA Commentor: Jablonowski
Section #: 2.1.3.1 Page #: 14 Lines #: 44 and 45
Original Specific Comment #: 20
Comment: The text states that the slurry feed tanks will have cooling water jackets to remove heat resulting from agitation. The text should identify the source of this jacket water, explain how the heat is removed from this water, and explain if this water will require treatment.

Response: The source of the cooling water will be the Chilled Water System (system 56). This system is cooled by a mechanical chiller. The system is a closed water system.

Action: The text will be revised to note that the cooling jackets are fed by the chilled water system (system 56)

38. Commenting Organization: U.S. EPA Commentor: Jablonowski
Section #: 2.1.3.3 Page #: 15 Lines #: 21 through 26
Original Specific Comment #: 21
Comment: The text states that three pumps will be used to transfer thickened slurry to the product mixers but does not specify the type of pumps. The text should clarify the pump type.

Response: The slurry pumps are currently specified as centrifugal pumps.

Action: The first sentence of section 2.1.3.3 will be revised to read "Three centrifugal pumps..."

39. Commenting Organization: U.S. EPA Commentor: Jablonowski
Section #: 2.1.3.4 Page #: 15 Lines #: 39 through 42
Original Specific Comment #: 22
Comment: The text states that "pinch valves will be used on primary slurry lines to minimize pluggage and flow restrictions." Pinch valves work well on organic type sludges and some slurries; however, they may not close properly when a 30-percent slurry is pumped. The text should explain if these valves were tested on 30-percent slurry similar to K-65 material or be revised to explain how the pinch valves were chosen.

Response: Pinch valves have been tested, and demonstrated to perform adequately on surrogate Silos 1 and 2 material during AWR Project Cold Loop testing at Oak Ridge Tennessee. The valves will be further tested during Silos 1 & 2 Cold Loop testing.

Action: The first sentence of the third paragraph of section 2.1.3.4 will be revised "Based on cold loop testing, pinch valves are used on primary slurry lines…"

40. Commenting Organization: U.S. EPA Commentor: Jablonowski
Section #: 2.1.3.4 Page #: 16 Lines #: 35 through 36
Original Specific Comment #: 23
Comment: The text states that a radiation measurement of the slurry will be taken to measure the gamma dose that may impact waste transport criteria. However, it is unclear what quantitative criteria will be applied in order to make a determination that transportation requirements could be compromised. Additional information should be provided explaining specific dose level criteria and what actions will be performed to ensure that final waste forms meet specific dose-rate requirements.

Response: (Assume comment refers to Section 2.1.3.7) The quantitative criteria will not be known until operations commence. Operations will start at a low, e.g. 15%, waste loading which should meet all requirements. As waste loading is increased, the radiation readings on the slurry line will be correlated with external readings on the waste containers to maintain compliance.

Action: N/A

41. Commenting Organization: U.S. EPA Commentor: Jablonowski
Section #: 2.1.3.6 Page #: 16 Lines #: 15 through 25
Original Specific Comment #: 24
Comment: The text states that the thickened slurry is sampled from the slurry recycle loop. The text should explain how often the slurry will be sampled and the turnaround time for sample analysis. In addition, the text should explain how the batch recipe will be adjusted to ensure that the final product meets transport and disposal requirements.

Response: Sampling plans are discussed in section 3.3.1.3 and in Appendix 3 the Sampling and Analysis Plan. The batch recipe is discussed in section 4.3.

Action: N/A

42. Commenting Organization: U.S. EPA Commentor: Jablonowski
Section #: 2.1.3.7 Page #: 16 Lines #: 37 through 39
Original Specific Comment #: 25
Comment: The text states that each of the slurry feed tanks has "a separate pressure relief and vacuum relief valves to prevent pressurization or vacuums above the tank design." The text should explain how a pressure or a vacuum could develop inside these tanks, which would exceed the tank design levels. According to Section 2.1.3, the tanks are connected to the RCS system to control radon emissions. The RCS system operates on very low pressure and vacuum.
Response: Although over pressurization or vacuum buildup in the tanks is not anticipated, pressure relieve and vacuum relief is good engineering design and is required to meet API 650 specifications. An overpressurization could exist if all tank outlets were plugged or valves closed and the full tank were undergoing a fill cycle. An implosion situation could exist if all outlets were plugged or valved off and the tank pumps were in operation to transport material out of the tank.
Action: The sentence noted by the reviewer will be revised as follows "Each tank also has a separate pressure relief valve and vacuum relief valve to prevent pressurization or vacuums above the tank design levels as required by API 650."

43. Commenting Organization: U.S. EPA Commentor: Jablonowski
Section #: 2.1.4.1.2 Pages #: 17 and 18 Lines #: 38 and 42
Original Specific Comment #: 26 41 and 42
Comment: The text states that the cement and fly ash will be fed by gravity from the bins into the respective feeder through an inflatable, seated butterfly valve. The text should explain how this valve will be inflated and indicate the valve manufacturer.
Response: The inflatable, seated butterfly valve is manufactured by Posi-Flate, St. Paul Minnesota (website address: www.posiflate.com). The inflatable, seated butterfly valve is commonly used in the operation of pneumatic transfer systems for dry and abrasive solids in the commercial sector.

The inflatable seated butterfly valve design uses air pressure to expand its seat against the disc, providing even pressure distribution for a bubble-tight seal, every time. Because the seat makes only casual contact with the disc during valve opening and closing, there is minimal disc impingement. This is in contrast to conventional butterfly valves where disc impingement leads to shaving of the seat, decreasing the overall performance and valve life.

Substantially less torque is required to open and close the butterfly valve, thus a smaller actuator can be used resulting in lower overall valve cost. The inflatable seated butterfly valve has a life of one million to three million cycles.

As the valve rotates into the closed position, the disc makes only casual contact with the seat, reducing friction, wear and torque requirements. After the valve is closed, the seat inflates against the disc providing more sealing surface and an even pressure distribution against the disc. Before the valve opens, the seat is first deflated. The disc is then free to rotate to the open position.
Action: N/A

44. Commenting Organization: U.S. EPA Commentor: Jablonowski
Section #: 2.1.8 Page #: 22 Lines #: 1 through 4
Original Specific Comment #: 27 Comment: The text states that the scrubber water is recirculated in the scrubber until the solids buildup to approximately 5 to 10 percent, then the scrubber solution is recycled back to the supernatant tank or slurry feed tank. Scrubbers use water spray nozzles with very small openings. Typically, spray-water for scrubbers is free of solids. Recirculating the internal solution laden with 5 to 10 percent solids may affect efficiency of the scrubber by clogging up these nozzles. In addition, the scrubber solution is typically removed and not recycled as stated. The text should be revised to address these issues.

Response: The scrubber is a venturi type scrubber so solids buildup will not have a significant impact on performance. The control of the scrubber blowdown has been changed from solids percentage to turbidity. Recycling, in this context, means that the scrubber blowdown will be treated along with the Silos 1 and 2 material.

Action: Section 2.1.8 will be revised to reflect this change.

45. Commenting Organization: U.S. EPA Commentor: Jablonowski
Section #: 2.2.1.1 Page #: 23 Line #: 24
Original Specific Comment #: 28
Comment: The text refers to "accumulating conveyors." The text should be revised to clarify the meaning of this phrase.

Response: An accumulating conveyor is a series of conveyor sections which are driven and controlled separately. As each section of conveyor is filled, that section is stopped until there is a demand downstream to index or move forward the conveyor. The unfilled sections of conveyor upstream are still operational to allow continued loading or "accumulation" of material (e.g. containers) on the conveyor.

Action: N/A

46. Commenting Organization: U.S. EPA Commentor: Jablonowski
Section #: 2.2.1.2 Page #: 23 Lines #: 40 through 47
Original Specific Comment #: 29
Comment: The text describes movement of containers through room 114. A simple diagram or drawing should be included to show this process.

Response: Drawing number 94-X-3900-M-1600 illustrates the flow through Room 114. This drawing is included in the RD package.

Action: Section 2.2.1.2 will include a reference to Drawing 94-X-3900-M-1600.

47. Commenting Organization: U.S. EPA Commentor: Jablonowski
Section #: 2.2.1.3 Page #: 24 Lines #: 21 and 22
Original Specific Comment #: 30
Comment: The text states that defective containers are removed and returned to the vendor. However, Line 42 on this page states that defective containers are "moved by forklift to a holding/repair area," implying that they are repaired on site and not returned to the manufacturer. The text should be revised to resolve this apparent discrepancy.

Response: Comment acknowledged.

Action: Line 42 will be revised to " The palletized container is then moved by forklift to a holding/return area, and subsequently returned to the vendor."

48. Commenting Organization: U.S. EPA Commentor: Jablonowski
Section #: 2.2.2.2 Page #: 26 Lines #: 1 through 9
Original Specific Comment #: 31
Comment: The text states that the containers are filled by a chute attached to a discharge valve from the mixer above and that the fill chute is equipped with an extended bellows so that the fill chute is coupled to the container opening. When the product is flowing through this fill chute, it will tend to adhere to the chute walls, specifically in the bellows section. Once the chute is uncoupled from the containers, the material will drip out of the chute and contaminate the outside of the container. One way of solving that problem is to install a redundant valve (knife valve) at the bottom of this chute. This valve could be used to contain material in the chute that would otherwise drip out when the chute is disconnected from the container. The text should be revised to address these issues.

Response: The design of the fill chute has taken these issues into consideration. The fill chute is equipped with vibrators to assist in completely emptying the chute prior to being removed from the container. A second knife valve is located at the bottom of the chute. The drip pan is repositioned immediately after retraction from the product container to capture any residual material that remained in the chute.

Action: A sentence will be added to acknowledge the use of vibrators to assist in chute emptying.

49. Commenting Organization: U.S. EPA Commentor: Jablonowski
Section #: 2.2.2.3 Page #: 26 Lines #: 13 through 18
Original Specific Comment #: 32
Comment: Container inspection is to be performed remotely due to the potentially high exposure-rate from the waste containers. This being the case, it is not clear how decontamination activities will be performed. The text should be expanded to discuss decontamination efforts, when needed.

Response: In the event contamination is observed during the remote inspection of the container, the visual contamination would be removed by a facility operator before the container leaves the fill room. The operator would be appropriately dressed in personal protective equipment. Depending on the

quantity of contamination encountered, the operator would either remove the contamination using a long reach tool (e.g., a "swifter" for a light splatter) or use more rigorous contact methods for more extensive contamination (e.g., spatula with hand wash). Various methods and procedures would be evaluated during system start-up activities, so that worker radiological exposure is maintained ALARA and adequate supplies are ordered to support operations activities. These procedures will be discussed in the Remedial Action Plan for the facility.

Action: N/A

50. Commenting Organization: U.S. EPA Commentor: Jablonowski
Section #: 2.2.2.5 Page #: 26 Lines #: 37 through 39
Original Specific Comment #: 33
Comment: The text states that every second container will be sampled. The text should clarify how these samples will be collected. The text also states that after the samples have cured, they will be examined for free liquids. The text should clarify the sample curing time prior to toxicity characteristic leaching procedure (TCLP) testing as well as how "free liquid" in the sample will be addressed. If free liquid is observed, it is very possible that free liquid is also present inside the sealed product container from which the sample was collected.

Response: The samples will be taken from the fill chute, as the treated Silos 1 and 2 material enters the container. Since neither the NTS nor Envirocare WAC specify TCLP limits for 11(e)(2) material, TCLP analyses of treated Silos 1 and 2 material are not currently planned. However, final sampling and analysis requirements (i.e., use of process knowledge vs. sampling and analysis, number/frequency of analyses and necessary analytes, and the need for TCLP analyses) for treated Silos 1 and 2 material will be negotiated with the selected disposal facility(s).

If free liquids are identified, absorbent can be added to the initial containers to make them acceptable for transport and disposal, and more fly ash can be added to the recipe to absorb the excess water in subsequent batches.

Consistent with the approved Remedial Design Work Plan, final sampling and analysis requirements for treated Silos 1 and 2 material will be documented in a treated waste Sampling and Analysis Plan, submitted for U.S. EPA and OEPA approval as a Remedial Action (RA) deliverable. The issues raised in U.S. EPA's comment will be addressed as appropriate based upon the final requirements.

Action: The referenced text has been revised to clarify that final sampling and analysis requirements for treated Silos 1 and 2 material will be documented in a treated waste Sampling and Analysis Plan, submitted for U.S. EPA and OEPA approval as a Remedial Action (RA) deliverable.

51. Commenting Organization: U.S. EPA Commentor: Jablonowski
Section #: 2.2.2.5 Page #: 26 Lines #: 39 through 42
Original Specific Comment #: 34
Comment: The text states that one sample will be sent to a laboratory for analysis and the other sample will be stored in the container fill room. Typically, cement-stabilized soil mixtures need to be cured for 28 days and should be cured under the same conditions as the product. The American Society for Testing and Materials (ASTM) Method C618 requires that the pozzolanic activity index with Portland cement be a minimum of 75 percent of the average 28-day compressive strength of control mixes made with Portland cement. The text should indicate how long the samples will be cured on site in the container fill room prior to shipment for laboratory analysis and if these samples will be stored in sealed containers to replicate the same conditions the product will undergo.

Response: The second sample referred to in the text is a 'backup sample' which will be retained in case one of the analyses of the original sample needs to be repeated. As stated in the text, these samples will be retained temporarily and then disposed of. With respect to curing times, since neither the NTS nor Envirocare require waste form compressive strength analyses as part of their WAC, there are no current plans to conduct compressive strength analyses, or other tests which specify extended cure times.
Action: N/A

52. Commenting Organization: U.S. EPA Commentor: Jablonowski
Section #: 2.2.2.5 Page #: 27 Lines #: 12 through 15
Original Specific Comment #: 35
Comment: The last sentence of the paragraph states that samples may be collected from the fill chute and deposited into an attached container. The method used to obtain these samples should be clarified. Specific Comment No. 34 also applies here and should be addressed.

Response: In an effort to maintain worker radiological exposure ALARA, the fill chute is designed with an in-line, remotely-operated Isolok sampler, capable of collecting an in-situ sample of the grout product, prior to discharge to the container. The Isolok sampler is located inline of the fill chute, approximately five feet above the mezzanine floor level in the fill room. The fill chute would be filled with grout so that an in-situ sample of the grout can be collected. The sample would be collected as follows:

- The 18-inch knife-gate at the bottom of the fill chute station would be closed.
- The 18-inch knife-gate valve at the base of the product mixer (top of the fill chute) would be incrementally opened, allowing the rate of discharge of the product from the product mixer to be regulated.
- After the fill chute has been filled with product, the Isolok sampler will be remotely operated to collect the sample.
- After the sample has been collected, the 18-inch knife-gate at the bottom of the fill chute station would be opened, allowing the product to be discharged into the container.
- The container would be lidded and further processed.
- The product sample would be retrieved by an operator after the container has left the area.

Action: This text will be added in Section 2.2.2.5 to clarify lines 12 through 15.

53. Commenting Organization: U.S. EPA Commentor: Jablonowski
Section #: 2.2.3 Page #: 27 Lines #: 19 through 46
Original Specific Comment #: 36
Comment: The text does not indicate how long the filled containers will remain on site. From the time the samples are collected, cured, shipped to laboratory for analysis, and analyzed, several weeks may pass before the test results are available. The text should also indicate what will be done if the samples fail TCLP analysis.

Response: The time a filled container remains onsite prior to shipment to the disposal facility is expected to be determined by the time required to stage and prepare railcars (or trucks) for shipment, prepare and approve shipping papers, etc. The filled containers will be immediately placed into shielded railcars in the load out area. As railcars are filled with containers, they will be moved into the FEMP rail yard for assembly into unit trains for off-site shipment to the disposal facility. At an operational design rate of 4.25 railcars being filled per day, seven days per week, it would take approximately 15 days to assemble a unit train for shipment, and another 4 days to process the shipment papers and arrange rail transportation.

Therefore, it is assumed that it take approximately 3 weeks to complete a unit train cycle for shipment. The loaded railcars comprising each unit train would be onsite a range of approximately 4 to 20 days before they are shipped offsite. Laboratory contracts will specify turnaround times such that analytical results will be available within this timeframe.

With respect to TCLP analyses, the need and criteria for TCLP analyses for WAC attainment will be finalized through the final waste acceptance process with the selected disposal facility(s). Since neither the NTS, nor Envirocare, specify TCLP limits for 11(e)(2) material, there are currently no plans to conduct TCLP analyses of treated Silos 1 and 2 material.

Action: Final sampling and analysis requirements for treated Silos 1 and 2 material, and any actions to be taken in response to out-of-specification results, will be documented in a treated waste Sampling and Analysis Plan, and transportation & Disposal Plan submitted for U.S. EPA and OEPA approval as Remedial Action (RA) deliverables.

54. Commenting Organization: U.S. EPA Commentor: Jablonowski
Section #: 2.2.3 Page #: 27 Line #: 32 through 45
Original Specific Comment #: 37
Comment: The text states that the loaded 15-ton containers will be placed into seven steel-lined transport cells with lids inside the gondola rail car. The text also states that the loaded 15-ton containers may be transported by truck and that containers with high radiation levels will be placed in railcars with containers having lower radiation levels to meet DOT dose rate requirements (Title 49 of the Code of Federal Regulations 173.441). The text should explain how low-level radiation and high-level radiation containers will be placed to meet DOT dose rate requirements if the containers will be transported by truck. The DOT truck legal

load limit is 80,000 pounds, or 40 tons. Presumably, these trucks will have steel shielding with lids that will add to the trucks' weight to a point where only one container can be legally transported per truck. In this case, the text should explain how a container of high-level radiation material will be handled if it is transported by truck.

Response: The weight of the filled containers will be approximately 10 tons. This weight will be included in the RD Package.

A design for transporting containers of treated Silos 1 and 2 material by truck is currently being developed with the intent of being able to place two containers on each shipment.

Designs of the containers and transport systems are based on the assumption that Silos 1 and 2 material will be treated to reduce the radium-226 content to below 100,000 pCi/g in order to meet the acceptance criteria in the proposed license modification of a commercial disposal facility. The current designs assume a final radium-226 concentration of approximately 86,000 pCi/g with a resulting container contact radiation level of approximately 80 mrem/hr. Radiation levels above 80 mrem/hr are not anticipated due to the need to meet waste acceptance criteria and radiation level requirements established by the Department of Transportation. The treatment formulation per batch will be modified as needed to ensure these requirements are met.

Action: Section 2.2.3 will be modified to reflect a filled shipping container weight of 10 tons and an anticipated truck loading of two containers per truck.

55. Commenting Organization: U.S. EPA Commentor: Jablonowski
Section #: 2.3.1 Page #: 28 Lines #: 17 through 26
Original Specific Comment #: 38
Comment: The third sentence states that the HVAC system will be maintained under negative pressure of -0.25 to -1.50 inch water column. The text should state how these values were determined and how this pressure differential will be adequate to maintain negative pressure in the remediation building.

Response: The variable values of negative pressure were calculated on the basis of the driving force necessary to move air through the facility. The -0.25 inches of water column is equivalent to the velocity head of a 23 MPH wind and was a starting point for the facility space pressure with all downstream spaces at a lower pressure. This negative pressure is clearly adequate to keep any air leakage INTO the facility and not out of the facility. The statements provided in the text are adequate to convey the intent and approach for maintaining negative pressure in the building.

Action: N/A

56. Commenting Organization: U.S. EPA Commentor: Jablonowski
Section #: 2.3.2 Page #: 29 Lines #: 4 through 13
Original Specific Comment #: 39
Comment: The text states that the "occupied areas of the Remediation Building are maintained at a slightly negative pressure" and "the areas with potential for contamination are maintained at a slightly more negative pressure to ensure that all air exchange between a normally occupied area and a potentially contaminated area is always towards the latter..." The text should explain how this will work without the use of airlock doors. Typically, when a door is opened between two rooms with only a slight pressure differential between them, the pressure will equalize rather quickly. An average door has an opening of 20 square feet, which is much larger than any air "inlet" or "outlet" to those rooms. Also, if there is a temperature gradient between the two rooms, a back flow can be created from the more contaminated area to the clean area. The text should be revised to address these issues.

Response: Rooms 104, 105 and 139 are air lock vestibules for traversing from the normally occupied areas to areas with potential for contamination. These airlocks vestibules will adequately address the issues raised in this comment.

Action: N/A

57. Commenting Organization: U.S. EPA Commentor: Jablonowski
Section #: 2.3.2 Page #: 29 Lines #: 19 through 36
Original Specific Comment #: 40
Comment: The ventilation air exchange rates should be described in terms of air velocity or air volume exchanged per hour. The equipment used to measure air exchange rates should also be specified.

Response: Ventilation turnover rates are listed in the text on page 29. In testing and balancing the facility air flows during the construction, the contractor will use equipment designed for the purpose, including but not limited to hot wire anemometers, wind vane anemometers, and/or pitot tubes.

Action: N/A

58. Commenting Organization: U.S. EPA Commentor: Jablonowski
Section #: 2.3.2 Page #: 29 Lines #: 21 through 36
Original Specific Comment #: 41
Comment: The text indicates that some areas of the building will be maintained at temperatures of up to 103 °F. This high temperature may affect some electronic controls, surveillance, and instrumentation located in the areas exposed to elevated temperatures. Typically, electronic equipment should not be operated outside the manufacturer's specified temperature range. The text should be revised to address this issue.

Response: The 103°F areas include areas where there is no cooling other than ambient air. The calculated air flow is based on design ambient plus 10 degrees. Electronic equipment specified for these areas has been specified to meet this condition.

Action: N/A

59. Commenting Organization: U.S. EPA Commentor: Jablonowski
Section #: 2.3.2.1 Page #: 29 Line #: 40
Original Specific Comment #: 42
Comment: The text in the first line is not clear. Typically, the capacity of air-conditioning units is presented in tons or British thermal units per hour (Btu/hr). The text should be corrected accordingly.

Response: The text is intended to convey the fact that the air conditioning units have spare capacity and therefore a higher level of availability. Each of three units is a 115 ton, 21,250 CFM air conditioning unit, capable of providing half the required air conditioning.

Action: Section 2.3.2.1 has been revised to include the capacity of the air conditioning units.

60. Commenting Organization: U.S. EPA Commentor: Jablonowski
Section #: 2.3.2.1 Page #: 29 Lines #: 44 and 45
Original Specific Comment #: 43
Comment: The text indicates the use of space heaters. Space heaters should only be used in areas where flammable or explosive atmospheric hazards are not present. The text should be revised to specify that explosion-proof space heaters will be used.

Response: There are no explosives or flammables in the facility. Space heaters are actually electric unit heaters.

Action: N/A

61. Commenting Organization: U.S. EPA Commentor: Jablonowski
Section #: 2.3.2.2 Page #: 30 Lines #: 6 and 7
Original Specific Comment #: 44
Comment: The text states that each filter train of the air exhaust system has two stages of high-efficiency particulate air (HEPA) filters in series with a combined removal efficiency of 99.97 percent. Typically, HEPA filters are rated at 99.97 percent efficiency. The text should explain why two filters with the same removal efficiency are used in series. When two HEPA filters are used in series, the filters should be higher than the efficiency for a single filter.

Response: The system design has been revised to a single stage of HEPA filtration.

Action: Text has been revised to reflect the single stage of HEPA filtration.

62. Commenting Organization: U.S. EPA Commentor: Jablonowski
Section #: 2.3.2.3 Page #: 30 Lines #: 21 through 24
Original Specific Comment #: 45
Comment: The text states that "motorized dampers are provided in the supply ducts to rooms that receive conditioned air directly from the air conditioning units (ACU)" and that "these dampers provide the ability to isolate the supply air and maintain each room's differential pressure when a door is opened that breaches the cascade ventilation system boundary." If the supply air damper in the air supply duct, which normally has higher pressure, is closed, and a

door to that room is opened from the adjacent room, which has a lower pressure, then the pressure in both rooms will equalize rather quickly. If there is a temperature gradient between the two rooms, it is very possible that the air from the contaminated area will be drawn into the clean room by the temperature differential across the open door. Air lock doors are commonly used to minimize cross contamination. The HVAC design should be reviewed and the text should be revised to address these issues.

Response: These dampers have been deleted.

Action: Paragraph will be revised to reflect deleting these dampers. See also response to comment #39.

63. Commenting Organization: U.S. EPA Commentor: Jablonowski
Section #: 2.3.2.3 Page #: 30 Lines #: 39 through 43
Original Specific Comment #: 46
Comment: The text states that "motorized isolation dampers are installed in the transfer ducts between Zone 3 and Zone 2 rooms so that Zone 3 rooms can be isolated from the rest of the HVAC cascade ventilation system..." If dampers in the duct work between rooms in Zones 3 and 2 are closed, air in the rooms in Zone 3 still blows into those rooms. It is also not clear which way the doors open in those rooms. If the air source is cut off to rooms in Zone 2 and the exhaust fans are operational, it may be difficult to open or close the doors, depending on which way they open. The text should be revised to explain clearly how this system will work.

Response: The dampers have been deleted.

Action: Paragraph will be revised to reflect deleting these dampers. See also response to comment #39.

64. Commenting Organization: U.S. EPA Commentor: Jablonowski
Section #: 2.3.2.4 Page #: 31 Lines #: 3 through 5
Original Specific Comment #: 47
Comment: The text states that the "exhaust duct will be round, galvanized steel of welded construction with welded joints." Welding galvanized steel materials will damage the zinc coating. Other types of joints should be considered, such as gasketed flange joints. The text also does not state what type of galvanization will be required and if outside, inside, or both inside and outside surfaces will be galvanized. The text should be revised to address these issues.

Response: Comment acknowleged.

Action: Text will be revised to reflect galvanized, welded and flanged construction. Galvanizing will be zinc based and used on duct surfaces inside and out.

65. Commenting Organization: U.S. EPA Commentor: Jablonowski
Section #: 2.3.2.7 Page #: 31 Lines #: 43 and 44
Original Specific Comment #: 48
Comment: Specific Comment No. 42 also applies here and should be addressed.

Response: The system design has been revised to a single stage of HEPA filtration. See response to comment #42.

Action: Text has been revised to reflect the single stage of HEPA filtration.

66. Commenting Organization: U.S. EPA Commentor: Jablonowski
Section #: 2.4.1 Page #: 32 Line #: NA
Original Specific Comment #: 49
Comment: The text discusses logistical support; however, the use of trucks to transport filled product containers is omitted. Truck use for transportation of filled containers is discussed in previous sections. The text should be revised to include truck transport of product-filled containers.

Response: Agreed.

Action: The text will be expanded to address truck transportation of treated Silos 1 and 2 material.

67. Commenting Organization: U.S. EPA Commentor: Jablonowski
Section #: 2.4.1 Page #: 32 Lines #: 16 and 17
Original Specific Comment #: 50
Comment: The text indicates that four gondola railcars will be loaded with the product-filled containers daily and then assembled into trains of 60 to 65 railcars. The text should clarify how long the filled containers will remain on site from the time they are initially filled, and if the product will be cured for 28 days prior to loading and shipment.

Response: a.) The filled containers will be immediately placed into shielded railcars in the load out area. As railcars are filled with containers, they will be moved into the FEMP rail yard for assembly into unit trains for off-site shipment to the disposal facility.

At an average rate of approximately four railcars being filled per day, seven days per week, it would take approximately 15 days to assemble a 60-65 railcar unit train for shipment. Another five days is assumed to be necessary to process the shipment papers and arrange rail transportation, resulting in a total of approximately 20 days to complete a unit train cycle for shipment. The loaded railcars comprising each unit train would be onsite for a range of approximately 5 days (last cars) filled to 20 days (first cars filled) before they are shipped offsite.

b.) Although conventional concrete typically requires (28 days) to meet maximum strength requirements, there are no compressive strength criteria, or other criteria requiring a specified curing time, for treated Silos 1 material. The only physical criteria for the treated waste are that it be solidified and have no free liquid. Treatability results indicate that these requirements will be met within the a 2-5 day curing time, which is well within the 5-20 day period required to prepare and release a shipment.

Action: The text of Section 2.4.1 has been revised to identify the time required to prepare a train for shipment.

68. Commenting Organization: U.S. EPA Commentor: Jablonowski
Section #: 2.4.1.2 Page #: 33 Lines #: 10 through 14
Original Specific Comment #: 51
Comment: The text should be revised to explain how the product containers will be secured in the gondola railcars.

Response: The containers will be placed in gondola railcars specially outfitted with customized steel inserts that not only provide necessary shielding for compliance with DOT requirements, but more importantly secure and protect the containers for safe transportation. The inserts in each railcar form seven (7) container cells. Each cell is designed to secure and protect one container.

The base of each container cell is a circular receptacle that is slightly larger than the container and is designed to stabilize the container in both the x-y axes of motion. Each cell has a lid that is pneumatically raised, lowered and locked/unlocked. The cells are also designed to protect the container and cell from rain, snow, ice, and intruders. They are structurally reinforced to prevent vertical motion (up to 1 G) in the z-axis.

Access to the containers can only be gained by opening a locked (key-entry) control panel and applying compressed air lines to pneumatic fittings.

Action: The text in Section 2.4.1.2 will be revised to include this text to clarify lines 10 through 14.

69. Commenting Organization: U.S. EPA Commentor: Jablonowski
Section #: 2.5.1.2 Page #: 35 Lines #: 8 and 9
Original Specific Comment #: 52
Comment: The text states that "there will be 1 to 2 minute power outage until backup power is available." Usually, standby power generators can be on line within seconds. An automatic transfer switch can switch from the primary power (the utility) to the standby power (the generator) in less than 15 seconds. The text should be revised to explain this long power outage.

Response: There is a diesel generator connected to the electrical system for the purpose of backup power to the facility. On a loss of power, the loads on the electrical system are tripped off line. Once the diesel generator is on line and available for loading (approximately 30 seconds minimum) critical loads will be restarted and put on the diesel generator. While the diesel generator is capable of carrying these critical loads, it is not capable of handling the simultaneous starting current of all these loads. As a consequence these loads have a sequenced restart. (Instrumentation loads are carried on the uninterruptible power source (UPS) which is battery powered.) The 1-2 minute power interruption is related to the time required for diesel starting sequence plus the time for the restart sequence. As far as the control system is concerned there will be no interruption of power.

Action: The text of section 2.5.1.2 has been revised.

70. Commenting Organization: U.S. EPA Commentor: Jablonowski
Section #: 2.5.3.2 Page #: 36 Lines #: 10 and 11
Original Specific Comment #: 53
Comment: The text states that the emergency showers will be connected to the domestic water system. American National Standards Institute (ANSI) Method Z3558.1-1998 requires that the water for emergency shower be "tepid" (moderately warm or lukewarm). The text should clarify how this water temperature will be achieved.

Response: ANSI Standard Z358.1-1998 (not Z3558.1-1998), Emergency Eyewash and Shower Equipment is guidance, as opposed to an OSHA requirement, and is not made applicable to Fernald Closure Project activities by DOE Order 440.1A.

ANSI Std Z358.1-1998 establishes standards for injurious materials. Our emergency showers were installed to provide the capability for personnel decontamination and not installed due to a concern with exposure to any acidic or caustic materials. Supply of these showers with unheated domestic water is adequate for their intended purpose.

Action: N/A

71. Commenting Organization: U.S. EPA Commentor: Jablonowski
Section #: 2.5.3.4 Page #: 37 Lines #: 19 through 21
Original Specific Comment #: 54
Comment: The source of process chilled water should be specified.

Response: Comment acknowledged.

Action: The text of section 2.5.3.4 Will be expanded by the following two sentences. "The Chilled Water system is a closed water system. Any makeup water requirements will be provided from the process water system."

72. Commenting Organization: U.S. EPA Commentor: Jablonowski
Section #: 2.5.3.5 Page #: 37 Lines #: 28 and 29
Original Specific Comment #: 55
Comment: The text states that the seal water tank is equipped with a low-level indicator. The low-level indicator should initiate an alarm when the low level is reached. The text should be revised to address this issue.

Response: The level sensor in the seal water tank actuates a makeup water valve supplied by process water.

Action: The text will be revised as follows: " Process water is used to supply the seal water system. The tank is equipped with a low level indicator which automatically opens a makeup water valve when low level is reached."

73. Commenting Organization: U.S. EPA Commentor: Jablonowski
Section #: 3.1 Page #: 39 Lines #: 20 through 26
Original Specific Comment #: 56
Comment: The text states that the process objective is to treat materials from Silos 1 and 2 to meet an appropriately licensed off-site disposal facility's WAC for disposal. The text also states that some other objectives are included in case the product is disposed of at the NTS. The off-site disposal facility has apparently not been selected yet. It will be difficult to treat material to meet WAC without knowing where the treated product will be disposed of. The text should be revised to address this issue.

Response: The treatment process and the final product - stabilized grout within a sealed steel IP2 container - have been designed to meet the WAC requirements for both the NTS and Envirocare. Informal review of draft waste profile information for chemically stabilized Silos 1 and 2 material has indicated that the material will meet all criteria for disposal at the NTS, including physical and chemical criteria, radionuclide concentration levels, and radon flux requirements.

Action: The text will be revised to reflect the above response.

74. Commenting Organization: U.S. EPA Commentor: Jablonowski
Section #: 3.1 Page #: 39 Lines #: 28 and 29
Original Specific Comment #: 57
Comment: A contingency plan should be provided if water or other free liquid is present on top of the final packaged material. Consideration should also be given to the effect of transport and vibration on the stabilized product, including the creation of free-liquid on the product surface. These issues should be addressed.

Response: Treatability studies using actual K-65 material (taken from Silos 1 and 2) were completed in September 2003. The results showed that the grout product would set to a monolithic solid with no free liquid within 2-5 days, as long as the total solids content of the product was greater than 65 weight %. The study included tests to simulate the effects of vibration during transport (using a shaker table), temperature cycling, and freezing and thawing on the grout product. None of these additional tests resulted in the formation of free liquid on the product surface. The current process design assumes the grout will contain > 67.5 wt% solids, which should produce an acceptable product for transportation and disposal. The first few batches of product created during start-up of the treatment facility will be checked to ensure that no free liquids are formed in the full scale system. If free liquids do appear in the full scale treatment, absorbent can be added to the initial containers to make them acceptable for transport and disposal, and more fly ash can be added to the recipe to absorb the excess water in subsequent batches.

Action: N/A

75. Commenting Organization: U.S. EPA Commentor: Jablonowski
Section #: 3.2 Page #: 40 Lines #: 28 and 29
Original Specific Comment #: 58
Comment: The text states that "the stabilization recipe will contain amounts of additives that will be valid for a range of lead concentrations..." The text should specify the range of lead concentrations and the additives that will be used.

Response: Treatability studies using actual K-65 material (taken from Silos 1 and 2) were completed in September 2002. The results showed that the stabilization of the lead was independent of its concentration. As long as the pH of the TCLP extract solution was kept within the range of 8-11.5, there were no detectable amounts of lead in the extract. In order to achieve this pH range, it was determined that the treated product needed to contain 8-12 weight % of portland cement (type II). The current process design assumes the grout will contain 10 wt% cement, which should produce a treated product that passes TCLP.

Action: N/A

76. Commenting Organization: U.S. EPA Commentor: Jablonowski
Section #: 3.3.1.2 Page #: 41 Lines #: 26 through 28
Original Specific Comment #: 59
Comment: The text indicates that Ra-226 will be determined through direct measure or a correlated indicator. Caution should be exercised here since variable isotopic distributions could lead to considerable uncertainties if indirect characterization methodologies are applied. Additional information should be provided discussing how a correlated indicator will be established and verified for application.

Response: The Silos 1 and 2 project team is in the process of conducting tests on surrogate and actual K-65 slurries to evaluate the performance of various pumps, piping devices, and instrumentation. This includes the evaluation of an on-line monitor for Ra-226. Grab samples will be analyzed for Ra-226 by standard methods to verify its performance.

Action: N/A

77. Commenting Organization: U.S. EPA Commentor: Jablonowski
Section #: 3.3.1.3 Page #: 42 Line #: 23
Original Specific Comment #: 60
Comment: Table 3-1 lists a sample frequency of one per batch during "startup/upset" for the product mixer fill chute. Section 2.2.2.5, Line 27, states that every second container will be sampled, which is every second batch. The text should be corrected to agree with Table 3-1. The table also indicates that one sample per 15 batches will be collected from the product mixer fill chute, as an initial control. This frequency seems inadequate because the concentration of the slurry will be altered in order to control radiation. Because the slurry concentration will be varied, so will the quantities of cement, fly ash, and other unnamed chemical additives. A sample should be collected and analyzed each time the slurry concentration needs to be changed. The text should be revised to address this issue. Finally, the table indicates that

slurry feed tank sampling will also be reduced. Each slurry feed tank should be sampled to determine if the slurry concentration needs to be adjusted to lower radiation to comply with DOT requirements. Without sampling each slurry feed tank content for solids and Radium 226 (Ra-226), there is no way of determining if the slurry concentration needs to be adjusted. The text should be revised to address this issue.

Response: The text of Section 2.2.2.5 is consistent with Table 3-1. The TCLP requirement of every second batch is a worst case, but is still consistent with Table 3.1 which shows a Startup/upset sampling frequency of every batch. Since neither the NTSWAC, nor the Envirocare WAC specify TCLP limits for 11(e)(2) material, TCLP analyses of treated Silos 1 and 2 material are not currently planned. WAC demonstration sampling requirements will be finalized base on the final disposal site selected.

Attaining TCLP levels as required by the Silos 1 and 2 remedy is not expected to be an issue due to the excellent lead stabilization demonstrated by the design treatment formulation during treatability testing. The initial control sampling frequency of 1 sample per 15 batches is based on the capacity of the Slurry Feed Tank approximating 15 product batches. After the filling cycle, the solids and radiation levels in a Slurry Feed Tank will not change during the product delivery cycle. The tanks are also equipped with instrumentation to monitor the solids and radiation levels in the tanks.

Action: The treated waste Sampling and Analysis Plan will be submitted with in accordance with the RA Work Plan.

78. Commenting Organization: U.S. EPA Commentor: Jablonowski
Section #: 3.3.2.1 Pages #: 43 and 44 Line #: NA
Original Specific Comment #: 61
Comment: The text should include training requirements for the remediation process operator in accordance with Occupational Safety and Health Administration (OSHA) regulations.

Response: The Silos Project Health and Safety Plan (Section 8) includes the training requirements for Silos personnel.

Action: N/A

79. Commenting Organization: U.S. EPA Commentor: Jablonowski
Section #: 3.3.2.4 Page #: 45 Lines #: 8 through 18
Original Specific Comment #: 62
Comment: The text states that the operator will adjust the rate of cement and fly ash additives based on the slurry s percent solids and Ra-226 content. The text should be revised to state if the analytical parameters will be analyzed in real-time or if there is a delay between slurry testing and obtaining the results.

Response: The goal is to utilize on-line instrumentation to provide real-time measurement of percent solids and Ra-226 in the feed tank slurry. These instruments are included in the design, and are in the process of being tested on surrogate and actual K-65 slurries. The design also includes capabilities

for taking grab samples of the feed tank slurries, which would then be subjected to standard analyses for these parameters. At a minimum, grab sampling and laboratory analysis will be required for calibration of the on-line instruments. Section 2.1.3.6 provides details on sampling for this system.

Action: N/A

80. Commenting Organization: U.S. EPA Commentor: Jablonowski
Section #: 3.4.8 Page #: 49 Lines #: 15 through 18
Original Specific Comment #: 63
Comment: The text states that an operator will visually inspect the containers for external contamination. While it is evident that spilled cement waste would be visible on the exterior of the container. Fugitive dusts and light surficial contamination would not. In this regard, it is not clear what credence visual examination has with regard to verifying compliance with external contamination requirements. The text should be clarified to explain that only gross contamination (i.e. from stabilized media) would be appropriate for visual examination.

Response: Contamination of a container by fugitive dust is unlikely, as the grout filling operation is a wet process, and the high flow rate of air through the fill room (approximately 12 air changes per hour) will minimize any settling of dust.

Action: The text will be modified to indicate that the visual inspection is targeted at gross contamination from spilled or splashed grout from the filling operation.

81. Commenting Organization: U.S. EPA Commentor: Jablonowski
Section #: 3.4.9 Page #: 49 Lines #: 28 through 30
Original Specific Comment #: 64
Comment: The text states that containers with high radiation levels will be placed in railcars with containers having lower radiation levels to meet DOT requirements. According to Section 3.4.3, each slurry feed tank is sized to produce at least 10 product batches. If the slurry in the feed tank is highly radioactive, then all 10 product batches will most likely be highly radioactive. The railcar can hold seven product containers. If 10 product containers with high radiation levels are produced, they must be stored somewhere because only one or two highly radioactive containers will be loaded onto the railcar. It is not clear where the other product containers will be stored. Finally, it is not clear how long the product containers will remain on site after filling. The text should be revised to address these issues.

Response: Designs of the containers and transport systems are based on the assumption that Silos 1 and 2 material will be treated to reduce the radium-226 content to below 100,000 pCi/g in order to meet the acceptance criteria in the proposed license modification of a commercial disposal facility. The current designs assume a final radium-226 concentration of approximately 86,000 pCi/g with a resulting container contact radiation level of approximately 80 mrem/hr. In addition, the radium-226 levels in the feed batches will be monitored so that the treatment formula can be adjusted as

required to maintain target activity levels in the treated product. Although producing an entire batch of 10 containers with above-specification radiation levels is not likely, 10 containers could be distributed among several available railcars.

Action: N/A

82. Commenting Organization: U.S. EPA Commentor: Jablonowski
Section #: 4.2 Page #: 53 Lines #: 6 through 9
Original Specific Comment #: 65
Comment: The text states that a "higher percent solids of K-65 slurry than used in the baseline design are possible in the clarifier underflow under normal operating conditions." The text should clarify why a higher concentration slurry needs to be produced from the clarifier if the material will require dilution in the slurry mixing tanks in order to meet DOT radiation limits for transportation of product containers.

Response: Higher concentration slurry would be produced after operational testing showed that DOT radiation limits would be met. Higher concentration slurry would not normally be diluted in the slurry feed tanks.

Action: N/A

83. Commenting Organization: U.S. EPA Commentor: Jablonowski
Section #: 4.3 Page #: 53 Line #: NA
Original Specific Comment #: 66
Comment: It is not clear how long the stabilized K-65 material will be cured prior to TCLP analyses. The text should be revised to include this information.

Response: Since neither the NTS WAC nor the Envirocare WAC specify TCLP limits for 11(e)(2) material, TCLP analyses of treated Silos 1 and 2 material are not currently planned. Treatability studies using actual K-65 material (taken from Silos 1 and 2) were completed in September 2003. During the study, TCLP extractions and analyses were performed on the treated product after cure times ranging from 1 hour to 25 days. The TCLP lead concentration was ND (non-detectable) for all samples taken from products made with the final recipe/formulation, indicating that the TCLP results are independent of the cure time. Should TCLP analyses be required, a maximum cure time of two days is envisioned for samples requiring TCLP analysis.

Action: This information will be defined in the treated waste Sampling and Analysis Plan, which will be submitted as an RA deliverable.

84. Commenting Organization: U.S. EPA Commentor: Jablonowski
Section #: 4.3 Page #: 55 Lines #: 33 and 34
Original Specific Comment #: 67
Comment: Previously, the text identifies NTS as the disposal facility. Here, the text identifies Envirocare of Utah as a potential disposal facility. The text should clarify if both of these facilities will be used for disposal of the stabilized K -65 material, and if so, the WAC for each facility.

Response: Informal review of draft waste profile information for chemically stabilized Silos 1 and 2 material has indicated that the material will meet all criteria for disposal at the NTS, including physical and chemical criteria, radionuclide concentration levels, and radon flux requirements.

Action: The final waste acceptance process at the selected disposal facility will consist of review and formal approval of the waste profile, based upon the final waste form and packaging configuration. This process will confirm the packaging, certification, treated waste sampling and analysis requirements for acceptance of the waste at the selected facility. Consistent with the approved Silos 1 and 2 Remedial Design Work Plan, these retails will be documented in the Transportation and Disposal Plan and Treated Waste Sampling and Analysis Plan, to be submitted for U.S. EPA review and approval as a deliverable under the RA Work Plan.

85. Commenting Organization: U.S. EPA Commentor: Jablonowski
Section #: 4.3 Page #: 56 Lines #: 11 through 24
Original Specific Comment #: 68
Comment: It is not clear to this reviewer that a 6-day period is sufficient to demonstrate compliance with internal pressure requirements. A curing period alone may not be acceptable for off-site disposal. A time period from when the waste is generated to when it is realistically placed in a disposal cell (including potential down-time) should have been considered. Additional information should be provided to ensure that internal pressures will not exceed 1.5 atmospheres even after considerable storage periods.

Response: Pressure within a sealed product container is solely a function of the temperature of the contents (grout and headspace gas). Calculations have shown that the pressure increase due to Radon emanation is negligible. The grout formulation developed during the treatability studies has a nominal cement loading of 10 weight %, which is very low in comparison to the high-strength (high cement loading) grouts that are used for many stabilization projects. Since the cement loading is so low, the temperature rise during the curing of the grout is also relatively low, as confirmed by the treatability study results. Furthermore, the studies showed that the maximum temperature, and the corresponding maximum headspace pressure, occurred within the first 3 days of the curing process. The headspace pressure and temperature after the initial cure period would solely be a function of ambient temperature swings, and would not build up over time. Therefore, excessive pressures within the sealed waste containers are highly unlikely.

Action: N/A

86. Commenting Organization: U.S. EPA Commentor: Jablonowski
Section #: 5.4.1 Page #: 58 Lines #: 29 through 36
Original Specific Comment #: 69
Comment: The text states that "the radon treatment capacity was expanded to support concurrent operation of the AWR and Silos 1 and 2 Remediation Facility." The text only mentions the initial airflow into the RCS system prior to the chilling/drying unit and carbon beds. The text should explain if the additional moisture removed from the Silos 1 and 2 remediation facility will have a detrimental effect on the moisture removal system of the RCS. The text should also indicate any effects the additional heat generated during the stabilization process will have on the RCS.

Response: The stated inlet temperature/humidity design conditions for the RCS are conservative by a factor of at least two. The moisture coming from the Silos 1 and 2 remediation facility will not be extraordinary. Heat generation in the mixers will be inconsequential.

Action: N/A

87. Commenting Organization: U.S. EPA Commentor: Jablonowski
Section #: 5.5.1 Page #: 59 Lines #: 27 through 35
Original Specific Comment #: 70
Comment: The text describes three waste retrieval operating modes. Another scenario could involve retrieval of slurry from one of the silos, bypassing the transfer storage tanks and pumping the slurry directly into the slurry receipt tanks. This approach is similar to the concurrent silo waste retrieval system (SWRS) and transfer storage tank waste retrieval system (TWRS) and does not require the use of transfer storage tanks. The text should address this scenario.

Response: The piping design for the Transfer Tank Area and the Remediation facility does not allow for the direct transfer from the silos to the Remediation Facility Slurry Receipt Tanks. Slurry removed from the silos must be deposited in one of the TTA tanks prior to transfer to the remediation facility.

Action: N/A

88. Commenting Organization: U.S. EPA Commentor: Jablonowski
Figures #: 5-1, 5-2, and 5-3 Pages #:60,62,63 Line #: NA
Original Specific Comment #: 71
Comment: The symbol for a closed valve should be added to the figures.

Response: Comment Acknowledged.

Action: Figures 5-1, 5-2, and 5-3 have been corrected to show this symbol.

89. Commenting Organization: U.S. EPA Commentor: Jablonowski
Section #: 5.6 Page #: 61 Line #: 33 through 41
Original Specific Comment #: 72
Comment: The text states that "the (water storage) tanks are equipped with level instruments to control domestic fill water valve, based on tank level, so that the tanks maintain adequate levels of stored water." The text also states that the "tanks have sufficient capacity to supply the silo sluicers with backup water at full flow for approximately one hour." If an adequate level of water is kept in the tanks, there should be an unlimited supply of backup water for the sluicers. If only 1 hour of backup water is available in the storage tanks, the fill valve and the water supply line may not be of adequate size. The text also does not specify the maximum fill rate for these storage tanks. The text should be revised to address these issues.

Response: The fill rate is limited by the size of the domestic water line to the silo area, and is not designed to support sluicing operations for an extended period of time. Since the process water storage tanks will only be used to supply sluice water in an off-normal condition, the capacity to provide a one hour supply is adequate. Sluicing with only process water would introduce large amounts of water into the system that would exceed what can be incorporated into the waste product.

Action: N/A

90. Commenting Organization: U.S. EPA Commentor: Jablonowski
Table #: 6-2 Page #: 72 Line #: NA
Original Specific Comment #: 73
Comment: The dispersion modeling results for releases from Silos 1 and 2 of remediation air should be compared to federal and Ohio radiation requirements. The table should be revised accordingly.

Response: Agreed.

Action: The appropriate limits on offsite effective dose equivalent (EDE) annual average fenceline radon concentration has been added to the referenced table.

91. Commenting Organization: U.S. EPA Commentor: Jablonowski
Section #: 6.2.2.2 Page #: 75 Lines #: 19 and 20
Original Specific Comment #: 74
Comment: The stone size specified for check dam construction should reference the appropriate Ohio Construction and Material Specifications or ASTM standard.

Response: As specified in the referenced text, check dam installation is to be in accordance with the Ohio Department of Natural Resources (ODNR) "Rainwater and Land Development Manual," which is, in accordance with the site's NPDES Permit and Stormwater Pollution Prevention Plan, the appropriate standard for erosion and runoff control measures. The specified stone size is consistent with the ODNR manual.

Action: N/A

92. Commenting Organization: U.S. EPA Commentor: Jablonowski
Section #: 6.2.2.2 Page #: 75 Line #: NA
Original Specific Comment #: 75
Comment: The minimum "Factor of Safety" for check dam design should be stated in this section.

Response: The referenced text specifies construction of check dams in accordance with all applicable requirements of the Ohio Department of Natural Resources (ODNR) "Rainwater and Land Development Manual," which is, in accordance with the site's NPDES Permit and Stormwater Pollution Prevention Plan, the appropriate standard for erosion and runoff control measures.

Action: N/A

93. Commenting Organization: U.S. EPA Commentor: Jablonowski
Section #: 6.3.7.2 Page #: 81 Line #: 20
Original Specific Comment #: 76
Comment: The best available technology (BAT) for dust control should reference standard Fernald operating procedures.

Response: Section 6.3, page 77 of the RD package states that "RM-0047, Fugitive Dust Control Requirements, will be used as the appropriate site-specific definition of BAT for fugitive dust control..." RM-0047 is the Fernald standard operating procedure for dust control.

Action: N/A

94. Commenting Organization: U.S. EPA Commentor: Jablonowski
Appendix #: A-3 Pages #: A-14 Line #: NA
Original Specific Comment #: 77
Comment: It is the understanding that pre-filters and high efficiency particulate air (HEPA) filters will be used to support the negative air system associated with the project. Since the waste feed material is considered hazardous, it is not clear that fugitive heavy metal emissions would not create secondary mixed wastes from this effort. Additional information should be provided to justify that the filter would not be hazardous or the text should be revised to include these items as potential mixed waste.

Response: As described in RD Package the process ventilation system is treated through the Radon Control System (RCS). Given the K-65 material is maintained in the process as a slurry with very little potential to produce particulate, the HEPA filter elements are not expected to be a mixed waste. However, HEPA filter elements, or any other secondary waste found to be hazardous or mixed waste would be manifested, transported, and disposed of in accordance with the specified ARARs.

Action: The referenced text has been revised to clarify disposition of any hazardous or mixed waste that would be generated.

95. Commenting Organization: U.S. EPA Commentor: Jablonowski
Appendix #: B-1 Pages #: B-2, B-3, B-4 Line #: NA
Original Specific Comment #: 78
Comment: The figures are from the "Ohio Rainwater and Land Development Manual." This source should be referenced in the figures.

Response: Agreed.

Action: The Ohio Department of Natural Resources (ODNR) "Rainwater and Land Development Manual," will be referenced.

Drawings

96. Commenting Organization: U.S. EPA Commentor: Jablonowski
Drawing #: 94X-3900-F-01190 Section #: NA
Original Specific Comment #: 79
Comment: The process flow diagram should show the flow direction from the slurry receipt tanks to the slurry feed tanks.

Response: 94-X-3900-F-01190 is the flow diagram for the vessel vent system. Directional arrows are provided on this drawing.

Action: N/A

97. Commenting Organization: U.S. EPA Commentor: Jablonowski
Drawing #: 94X-3900-F-01103 Section #: NA
Original Specific Comment #: 80
Comment: Process step 3.36 states that defective containers will return to step 3.1, which states that the temporary lid fasteners should be removed, creating a unending loop. The flow diagram should be revised to alleviate this continuous, unending loop.

Response: Agreed.

Action: An updated drawing has been provided which eliminates the unending loop

98. Commenting Organization: U.S. EPA Commentor: Jablonowski
Drawing #: 94X-3900-F-01948 Detail #: 2
Original Specific Comment #: 81
Comment: The silt fence detail should be revised to show a 5-foot separation between the toe of the slope and the silt fence in accordance with the "Ohio Rainwater and Land Development Manual."

Response: Note 1 of the silt fence detail specifies that silt fence is to be installed in accordance with all requirements detailed by the ODNR manual, pages 118 - 125, which include maintaining the distance from the toe of the slope to a minimum of 5 feet.

Action: N/A

Responses to Ohio EPA Comments on Silos 1 and 2 Remediation Facility Draft Remedial Design Package November 2002

General Comments:

1. Commenting Organization: Ohio EPA Commentor: OFFO
Section #: na Pg #: na Line #: na Code: C
Original Comment #:
Comment: The design incorporates system redundancy in all areas except for the clarifier. Provide a contingency plan for how operations will be conducted in the event the clarifier fails.

Response: Fluor Fernald procured the services of the clarifier vendor early in the facility design process, so that their expertise could be utilized to complete the design. Based on their experience in processing materials similar to the K-65 waste, the vendor recommended a single clarifier, with enhancements to ensure its durability and reliability, would be the best approach for our application. In the unlikely event that the clarifier becomes inoperable, it would be bypassed, and the slurry feed tank operations would be modified to provide some settling of the solids in the slurry. This approach would allow waste processing to continue, although the operating efficiency of the facility would be reduced.

Action: Details concerning 'contingency' operation of the facility with the clarifier out of service will be incorporated into the appropriate operating procedures.

2. Commenting Organization: Ohio EPA Commentor: OFFO
Section #: na Pg #: na Line #: na Code: C
Original Comment #:
Comment: The design states that most of the tanks will remain 1/3 full during operations. Provide details on how the remaining heel will be removed during upset conditions, as well as, during D & D.

Response: The tanks are designed with bottoms sloping toward the pump suctions. They are capable of being completely drained. The tanks are maintained at 1/3 full to insure agitation of the contents during periods when that particular tank is not in use. With constant agitation and the ability to pump the tank completely, heel removal is not an issue with these tanks.

Action: N/A

3. Commenting Organization: Ohio EPA Commentor: OFFO
Section #:General Comment Pg #: Line #: na Code: C
Original Comment #:
Comment: Several times throughout the document, several sumps and pumps will be used "to remove any leaks or spills." This gives Ohio EPA the impression that the facility is being designed for failure. Although it is prudent to develop contingency plans, DOE should place emphasis on keeping these leaks or spills from occurring.

Response: The design of the remediation facility and processing systems and the selection of equipment has focused on the minimization of leaks and spills. However, it would not be prudent, practical, or logical to assume that none will occur. Therefore, sumps and pumps are being installed in all areas where spills or leaks could occur, to provide containment and facilitate cleanup, thereby minimizing downtime associated with one of these unlikely events. This approach is a common industrial practice for liquid processing and storage systems, and is essentially required in RCRA tank systems to ensure that the spill can be cleaned up in a reasonable time period.

Action: None

4. Commenting Organization: Ohio EPA Commentor: OFFO
Section #: Pg #: Line #: Code: C
Original Comment #:
Comment: Several times throughout the document reference is made that the types of instruments to be used will be finalized based on the results of the cold loop tests. When are these results expected, and when will the instrumentation for this plan be finalized?

Response: The cold and hot loop full-scale mockup testing is currently in process and is scheduled to be completed in 2003. Based on the outcome of the testing, the instrumentation and controls will be evaluated for proper technical application.

Action: The instrumentation and controls specified in the current Silos 1 and 2 design will be revised as appropriate based upon the results of the mockup testing. Appropriate design changes will be communicated to the OEPA and U.S. EPA through the Design Change Notice (DCN) process.

Specific Comments:

5. Commenting Organization: Ohio EPA Commentor: OFFO
Section #: 1.1 Pg #: 1 Line #: 24 Code: C
Original Comment #:
Comment: The text states that the ROD requires disposal at NTS. How and when will DOE change the ROD to allow disposal at a commercially permitted disposal facility.

Response: As discussed in previous comment responses, the design reflected in the RD Package can be implemented under the current remedy via direct truck or intermodal transportation to the NTS. If viable commercial disposal options for disposal of Silos 1 and 2 material identified and selected for implementation, the necessary modification of the Silos 1 and 2 remedy will be documented in an Explanation of Significant Differences (ESD).

Action: If a decision is made to pursue a viable commercial disposal option for Silos 1 and 2 material preparation of the necessary ESD will be initiated at that time.

6. Commenting Organization: Ohio EPA Commentor: OFFO
Section #: 2 Pg #: 8 Line #: 6 - 8 Code: C
Original Comment #:
Comment: The text states that the stabilized product will shipped by rail to an appropriately licensed off-site disposal facility. The ROD currently states disposal at NTS. Also, there are currently No "appropriately licensed off-site disposal facility" other than NTS that can receive Silos 1 & 2 wastes. Contingency planning for disposal at NTS should be included in this design.

Response: The baseline for the Silos 1 and 2 project is being revised to reflect disposal at the NTS via either intermodal or direct truck shipment. As stated in the RD Package, the current design will accommodate either of these transportation modes. Section 1.3 of the RD Package states " If transportation by truck is chosen as the final transportation mode, the infrastructure provided by this RD package would be unaffected. The railcar loading facility is designed to accommodate both railcars and trucks." The tracks in the railcar loading facility are installed flush with the floor level so that the facility can be used, without modification, to load trucks. The disposal container design currently being finalized is specified to be useable for either truck or rail shipment. Customized railcars and trucks are currently being designed.

Action: Additional detail documenting the ability of the current design to support direct truck shipment has been added to Sections 2.2.3 and 2.4 of the RD Package. Details of the onsite packaging, staging, and offsite shipment of treated Silos 1 and 2 material to the selected disposal facility(s),will be documented in the Transportation and Disposal Plan. Consistent with the previously approved Silos 1 and 2 Remedial Design Work Plan, The Transportation and Disposal Plan will be submitted for U.S. EPA and OEPA review and approval as a deliverable under the RA Work Plan.

7. Commenting Organization: Ohio EPA Commentor: OFFO
Section #: 2.1 Pg #: 9 Line #: 3 - 7 Code: C
Original Comment #:
Comment: Will there be "clean-outs" for the slurry and auxiliary piping systems? Provide detail on how these will be incorporated into the design.

Response: The piping systems within the Silos 1 & 2 Remediation Building will not be provided with cleanouts. The piping will however be provided with multiple flushing connections. The piping systems will be provided with flush water connections on the suction and discharge of each pump. Piping systems will be completely flushed following each use. The Flush water system valves are all remotely operated to allow the operators to complete flushing from the control room.
Action: N/A

8. Commenting Organization: Ohio EPA Commentor: OFFO
Section #: 2.1.1.5 Pg #: 11 Line #: 16 - 17 Code: C
Original Comment #:
Comment: This section states that the transfer piping from the TTA to the Silos 1 and 2 remediation facility will be double-walled with sensors to detect leaks. Please provide piping drawings and specifications on what type of sensors will be used. Please also provide a contingency plan specifying the procedures to be followed in the event that a leak in the carrier pipe is detected, and how the piping will be fixed.

Response: The containment pipe will drain to the containment pan in Sump 20. The containment pan is equipped with a Drexelbrook Electronic Sensing Element and Level Control switch which will sound an alarm. Response to a level alarm would include shutting down the transfer of sluicing operation and using flush water to identify the point of carrier pipe failure. Repair work would be conducted using protective equipment and portable shielding as necessary to keep exposures ALARA.

Action: The P&ID for the Transfer lines and drainage to Sump 20 are included in the attachment to this Response to Comments Document. A leak response plan describing the procedures for response to detection of liquid in the containment pipe will be included in the Remedial Action Package.

9. Commenting Organization: Ohio EPA Commentor: OFFO
Section #: 2.1.1.8 Pg #: Line #: Code: C
Original Comment #:
Comment: Are the flush pumps adequate to provide the necessary velocities to prevent the plugging as specified for process pumps?

Response: Yes. Flush water pumps are rated at 200 gpm, while the maximum design flow from any slurry pump is 100 gpm.

Action: N/A.

10. Commenting Organization: Ohio EPA Commentor: OFFO
Section #: 2.1.3 Pg #: 14 Line #: 11-12 Code: C
Original Comment #:
Comment: Where will settled slurry from the clarifier be pumped to in the event of a power outage.

Response: The settled slurry will remain in the clarifier during a power outage. The clarifier slurry pumps are provided with emergency power during a power outage. The clarifier slurry will be recirculated within the clarifier. Inlet flow to the clarifier will be shut down during the power outage.
Action: N/A

11. Commenting Organization: Ohio EPA Commentor: OFFO
Section #: 2.1.3.4 Pg #: 15 Line #: 40 Code: C
Original Comment #:
Comment: Are the cast iron pinch valves lined with the "elastomer sleeve" over all process exposed surfaces? Past projects have had significant problems with cast iron valves.

Response: Yes

Action: N/A

12. Commenting Organization: Ohio EPA Commentor: OFFO
Section #: 2.1.4.1.2 Pg #: 17 Line #: na Code: C
Original Comment #:
Comment: What industries use pneumatic conveyance for cement and fly ash at the volumes and life-cycle proposed for this remediation facility? Provide additional detail on the pneumatic conveyance system. This response should include details on dust control during hopper and bin loading.

Response:

a.) The design of the pneumatic conveyance system for the cement and fly ash in the Silos 1 and 2 remediation facility is very typical of a large concrete batch plant. However, the cement and fly ash bins are sized somewhat larger than most batch plants in order to accommodate the Silos Projects' 24 hours per day, 7 days per week operations schedule. Most common concrete batch plants are typically single shift operations, thus allowing the required cement/fly ash inventory to be smaller.

b.) The life-cycle for the Silos 1 and 2 remediation facility's pneumatic conveyance system is extremely short (1-2 years) when compared to commercial concrete batch plants which have a design life greater than 20 years.

c.) The pneumatic conveying system, as discussed, is a dense phase pneumatic conveying system. The transporter is a small (10 ft3) transporter tank that receives cement from the Storage Bin. During the fill cycle, residual air pressure and displaced air are vented to the Storage bin and through the Storage bin Dust Filters to atmosphere. Each storage bin is equipped with six (6) Cartridge type dust filters. After the fill cycle, the material is aerated and the transporter is pressurized above conveying line pressure. The pressurized contents are release into the conveying line, displacing the material in the line. The conveying line is continuously filled with dense phase aerated material that slowly pulses toward the receiving bins. At the receiving bin, the cement and concrete separate in the receiving bin. Dearerated cement flows by gravity to the cement feed hopper. The transporting air is filtered through a bin vent located on the receiving bin. The bin vents on the three cement receiving bins ate vented through a common line to a single discharge to atmosphere. The three cement feed hopper are also supplied with bin vents to filter air displaced during the filling of the feed bin. The bin vents on each feed hopper are vented locally within the remediation building. The fly ash pneumatic conveying system is similar to the cement system.

Action: Additional detail has been added to the RD Package describing the bulk receipt of the cement and fly ash from the delivery trucks and its pneumatic transfer to the separate storage bins, pneumatic conveyance from the storage bins to the three (3) local receipt bins for each material, transfer from the receipt bins to the weigh bins for each chemical, transfer from the weigh bins to the product mixer for each material and the collection, filtration and exhaust of displaced air throughout the process for each system.

13. Commenting Organization: Ohio EPA Commentor: OFFO
Section #: 2.1.4.1.3 Pg #: 18 Line #: na Code: C
Original Comment #:
Comment: How will humidity and environmental conditions be controlled in the cement and fly ash receiving bins and hoppers.

Response: The high process usage rate of the cement and fly ash bulk receiving bins obviates the need to control the humidity in the cement and fly ash bins, due to the large volume of material passing through the bins on a daily basis. It is estimated that a total of six (6) truck loads of fly ash per day and three (3) truck loads of cement per day will be required to keep operations going.

The pneumatic conveyance of the cement and fly ash from the bins to the local receiving bins and weigh bins will be accomplished using the same high-quality, dry compressed air used for the facility's instruments. The design of the pneumatic conveying systems is adequate to deal with any impact of humidity during unplanned shutdowns.

Action: N/A

14. Commenting Organization: Ohio EPA Commentor: OFFO
Section #: 2.1.4.2.2 Pg #: 18 Line #: na Code: C
Original Comment #:
Comment: Revise the text to clarify how exhaust from the pneumatic conveying system will be treated. This section of the text is vague.

Response: The designs of the cement and flyash bins include filters to control dust. As illustrated on drawing 94-X-3900-F-1160, the cement and fly ash bins are ventilated to the atmosphere through built-in vent filters.

Action: The text revisions addressed in Comment 13 will include a discussion of the dust collection provisions for the pneumatic conveying system exhaust.

15. Commenting Organization: Ohio EPA Commentor: OFFO
Section #: 2.1.4.2.3 Pg #: 19 Line #: na Code: C
Original Comment #:
Comment: How will humidity and environmental conditions be controlled in the fly ash receiving bins and hoppers.

Response: The high process usage rate of the cement and fly ash bulk receiving bins obviates the need to control the humidity in the cement and fly ash bins. It is estimated that a total of six (6) truck loads of fly ash per day and three (3) truck loads of cement per day will be required to keep operations going.

The pneumatic conveyance of the cement and fly ash from the bins to the local receiving bins and weigh bins will be accomplished using dry instrument quality air. The design of the pneumatic conveying systems is adequate to deal with any impact of humidity during unplanned shutdowns.

Action: N/A

16. Commenting Organization: Ohio EPA Commentor: OFFO
Section #: 2.1.5.2 Pg #: 19 Line #: 33 Code: C
Original Comment #:
Comment: This plan only vaguely discusses flushing the product mixers. Will these mixers be flushed out after each transfer? Please provide a schedule for flushing the mixers and justification for the proposed schedule.

Response: The product mixers will be flushed out every eight hours. The product mixers will be self- cleaning during operation so flushing after each batch will not be necessary. The mixers will be flushed when they are taken out of service to avoid curing of product within the mixer during idle periods.

Action: N/A

17. Commenting Organization: Ohio EPA Commentor: OFFO
Section #: 2.1.6 Pg #: 19 - 20 Line #: na Code: C
Original Comment #:
Comment: How will the settling of slurry spills be prevented in these overflow lines?

Response: The overflow line between the supernatant tank and the sluice/flush water tank will not normally have any flow through it. High level alarms and interlocks will normally prevent the levels in these tanks from reaching the overflow. If one of these tank levels were to reach and flow through the overflow, there would be only fine particulate in the water that would not tend to settle in the short time the overflow condition would exist. This is because the 25 HP agitators in these tanks cannot create enough intensity to raise anything other than fine particulate to the level of the overflows.

Action: N/A

18. Commenting Organization: Ohio EPA Commentor: OFFO
Section #: 2.1.8 Pg #: 21 Line #: na Code: C
Original Comment #:
Comment: Provide a diagram indicating what equipment/rooms will not be vented to the RCS.

Response: As illustrated on drawing 94X-3900-F-1190, all equipment in direct contact with Silos 1 and 2 material (sluice/flush water tank, slurry receipt tanks, slurry feed tanks, supernatant tank, reaction and polymer addition tanks, clarifiers, and product mixers) are ventilated by the Vessel Vent System, which discharges through the RCS.

As illustrated on drawing 94-X-3900-F-1160, the cement and fly ash bins are ventilated to the atmosphere through built-in vent filters. As illustrated on drawings 94X-3900-H-01140, 01141, and 01142, the process building room ventilation, as well as the container loading area, and support buildings, is vented through the remediation building HVAC system and discharged through the Remediation Building Exhaust Stack. The Remediation facility Building HVAC system is described in detail in RD Package section 2.3.2.

Action:N/A

19. Commenting Organization: Ohio EPA Commentor: OFFO
Section #: 2.1.9 Pg #: 22 Line #: 8-9 Code: C
Original Comment #:
Comment: Please provide a list of everything that is dependent upon the treatability studies and AWR lessons learned, along with when each item will be completed. In what document will these final plans and equipment be included?

Response: The relevant data from Silos 1 and 2 treatability studies, as well as lessons learned from AWR testing, have been incorporated into the sampling equipment, system designs and other aspects of the design currently reflected in the RD package. Although further cold loop testing and mockup tests will be conducted to demonstrate the operation of the system constructed according to the current design, no further testing or evaluation of AWR results is required to complete the design of the Silos 1 and 2 remediation facility.

The sampling equipment and systems for the project have been finalized and designed, and are as indicated in the second paragraph. Details on the type and frequency of samples, as well as the analyses to be performed, will be defined in the Sampling and Analysis Plan, which will be submitted as an RA deliverable.

Action: The first paragraph of Section 2.1.9 now reads: "The major equipment in the Sampling System consists of the following:"

20. Commenting Organization: Ohio EPA Commentor: OFFO
Section #: 2.2.2.3 Pg #: 26 Line #: 16-18 Code: C
Original Comment #:
Comment: Please provide a detailed plan on how the decontamination of the containers will occur if product has dripped or splashed onto the container surface.

Response: In the event contamination is observed during the remote inspection of the container, the visual contamination would be removed by a facility operator before the container leaves the fill room. The operator would be appropriately dressed in personal protective equipment. Depending on the quantity of contamination encountered, the operator would either remove the contamination using a long reach tool (e.g., a swifter for a light splatter) or use more rigorous contact methods for more extensive contamination (e.g., spatula with hand wash). Various methods and procedures would be evaluated during system start-up activities; so that worker radiological exposure is maintained ALARA and adequate supplies are ordered to support operations activities.

Action: N/A

21. Commenting Organization: Ohio EPA Commentor: OFFO
Section #: 2.2.2.4 Pg #: 26 Line #: Code: C
Original Comment #:
Comment: How will the lid seal be tested after lid placement? Provide details on this test.

Response: Testing of the disposal container verified the performance of the airtight lid seal. The lid seal will not be tested after lid placement. The containers are designed to provide an air-tight seal following the placement and riveting of the lid, but there is no requirement to test the seal. Visual

observation will be used to verify that all of the rivets have been properly engaged.

Action: None.

22. Commenting Organization: Ohio EPA Commentor: OFFO
Section #: 2.2.2.5 Pg #: 27 Line #: 12-15 Code: C
Original Comment #:
Comment: Samples from the fill chute should be removed mechanically outside the container fill area. This would be consistent with ALARA.

Response: In an effort to maintain worker radiological exposure ALARA, the fill chute is designed with an in-line, remotely-operated Isolok sampler, capable of collecting an in-situ sample of the grout product, prior to discharge to the container. The Isolok sampler is located inline of the fill chute, approximately five feet above the mezzanine floor level in the fill room. The fill chute would be filled with grout so that an in-situ sample of the grout can be collected. The product sample would then be retrieved by an operator after the container has left the area.

Action: This text will be added in Section 2.2.2.5 to clarify lines 12 through 15.

23. Commenting Organization: Ohio EPA Commentor: OFFO
Section #: 2.2.3 Pg #: 27 Line #: Code: C
Original Comment #:
Comment: Other transportation options need to be added to the design since there are currently no commercially permitted disposal facilities available.

Response: The design reflected in the current RD Package can be implemented with disposal at the NTS using either direct truck or intermodal transportation. As stated the packaging and transportation infrastructure reflected in the RD Package is designed to accommodate both rail and truck transportation. Section 1.3 of the RD Package states " If transportation by truck is chosen as the final transportation mode, the infrastructure provided by this RD package would be unaffected. The railcar loading facility is designed to accommodate both railcars and trucks." The tracks in the railcar loading facility are installed flush with the floor level so that the facility can be used, without modification, to load trucks. The disposal container design currently being finalized is specified to be useable for either truck or rail shipment. Customized railcars and trucks are currently being designed.

Action: Additional detail documenting the ability of the current design to support direct truck shipment has been added to Sections 2.2.3 and 2.4 of the RD Package. Consistent with the approved Silos 1 and 2 Remedial Design Work Plan, details concerning the onsite packaging, staging, and offsite shipment of treated Silos 1 and 2 material to the selected disposal facility(s)will be documented in the Transportation and Disposal Plan, to be submitted for U.S. EPA and OEPA review and approval as a deliverable under the RA Work Plan.

24. Commenting Organization: Ohio EPA Commentor: OFFO
Section #: 2.3.1 Pg #: 28 Line #: na Code: C
Original Comment #:
Comment: The text states that the tank shield enclosures are sealed from personnel entry. What contingency plans are in place in case of a leak or malfunction in an area which is sealed?

Response: All operating equipment (pumps, valves, and most piping)is located in the pump galleries outside the tank vaults. The shielded tank vaults have sumps to pump minor spills or leaks out of the area. There are also cameras in the vaults to assess if entry is required. If entry into a tank vault is required, the tank contents will be pumped to another tank(e.g., one of the other slurry receipt tanks or slurry feed tanks) and processed through the remediation facility. The residual material within the vault will be drained through the sump. Once the material in the tanks has been processed, personnel clothed in proper protective equipment would enter the area through entry doors provided in the vault. This would be a radiological controlled entry.

Action: N/A

25. Commenting Organization: Ohio EPA Commentor: OFFO
Section #: 2.4.1.3 Pg #: 33 Line #: na Code: C
Original Comment #:
Comment: The document states road improvements are to be determined. This statement doesn't provide enough detail. Please provide more information on what improvements are to be made and where they will occur.

Response: Comment acknowledged.

Action: The text will be revised to include the following information:

The Silos Infrastructure Road, immediately to the south and east side of the remediation facility, must be raised approximately one foot in order to accommodate the vehicular traffic making daily deliveries to the remediation facility. The remediation facility's first floor elevation was determined by the maximum slope of the facility's rail spurs, which must tie-in to the FEMP's railroad infrastructure at the Track No.12 Second St. crossing.

26. Commenting Organization: Ohio EPA Commentor: OFFO
Section #: 3.3.1.3 Pg #: 42 Line #: na Code: C
Original Comment #:
Comment: Although Ohio EPA agrees in the concept of decreasing sampling frequency during treatment, DOE should increase sampling frequency when switching TTA tanks.

Response: The primary means of monitoring critical feed parameters (percent solids and radium-226 content) is to be the use of on-line instrumentation to provide real-time measurement these parameters in the feed tank slurry. These instruments are included in the design, and are in the process of being tested on surrogate and actual K-65 slurries. The design also includes capabilities for taking grab samples of the feed tank slurries, which would then be

subjected to standard analyses to validate the performance of the real-tile instruments. The frequency of these verification samples will be reduced as the online instruments are validated and process control is established.

Action: N/A

27. Commenting Organization: Ohio EPA Commentor: OFFO
Section #: 6.4.4 Pg #: 83 Line #: Code: C
Original Comment #:
Comment: Where will excavated soils be stockpiled prior to OSDF placement.
Response: : It should be noted that the majority of the site preparation activity referenced in this comment has been completed, with the excess soil disposed in accordance with Waste Acceptance Organization (WAO) field personnel. At the direction of WAO field representative, excess soil generated during remaining construction work will be staged in the immediate project area and transported to Excavation Area 3A, Stockpile Area A3A017. (North east corner of excavation Area 3A in the former production area) for storage prior to transport to the OSDF.

Action: N/A

28. Sampling and Analysis Plan:
Commenting Organization: Ohio EPA Commentor: OFFO
Section #: TOC Pg #: iii Line #: na Code: E
Original Comment #:
Comment: Fix "Error! Bookmark not defined" message in TOC.
Response: Comment Acknowledged

Action: The table of contents error has been corrected.

29. Commenting Organization: Ohio EPA Commentor: OFFO
Section #: 4.4 Pg #: 14-15 Line #: na Code: C
Original Comment #:
Comment: Provide list of analytes and methods for the stack monitoring portion of the SAP.

Response: The requested information is provided on page B-6 of the Sampling & Analysis Plan

Action: N/A

EPA/OEPA Comment Response- Supplemental Drawings	
Drawing Number	**TITLE**
94X-3900-E-01145	ELECTRICAL 480V SINGLE LINE DIAGRAM COMPOSITE DIAGRAM
94X-3900-E-01146	ELECTRICAL 480V SINGLE LINE DIAGRAM MCC-31-1000
94X-3900-E-01147	ELECTRICAL 480V SINGLE LINE DIAGRAM MCC-31-1001
94-X-3900-E-01501	Electrical Fiber Optic System 1st Floor Layout
94X-3900-E-01653	ELECTRICAL 480V SINGLE LINE DIAGRAM MCC-31-1002
94X-3900-E-01654	ELECTRICAL 480V SINGLE LINE DIAGRAM MCC-31-1003
94X-3900-E-01655	ELECTRICAL 480V SINGLE LINE DIAGRAM MCC-31-1004
94X-3900-E-01656	ELECTRICAL SINGLE LINE 13.2 KV & 34.5 KV AERIAL DISTRIBUTION
94X-3900-E-01657	ELECTRICAL SINGLE LINE 13.2 KV & 34.5 KV AERIAL DISTRIBUTION
94X-3900-E-01659	ELECTRICAL SYMBOLS AND LEGEND
94X-3900-E-01660	ELECTRICAL SYMBOLS AND LEGEND SINGLE LINE & SCHEMATIC DIAGRAMS
94X-3900-E-01661	ELECTRICAL ELECTRICAL & COMMUNICATION ABBREVIATIONS, ACRONYMS & NOTES
94X-3900-H-01693	HVAC REMEDIATION FACILITY CONTROLS SEQUENCE OF OPERATION
94X-3900-H-01694	HVAC REMEDIATION FACILITY CONTROL DIAGRAM
94X-3900-H-01695	HVAC REMEDIATION FACILITY CONTROL DIAGRAM
94X-3900-H-01696	HVAC REMEDIATION FACILITY CONTROL DIAGRAM
94X-3900-H-01697	HVAC REMEDIATION FACILITY CONTROL DIAGRAM
94X-3900-H-01698	HVAC REMEDIATION FACILITY CONTROL DIAGRAM
94X-3900-H-01699	HVAC REMEDIATION FACILITY CONTROL DIAGRAM
94X-3900-H-01700	HVAC REMEDIATION FACILITY CONTROL DIAGRAM
94X-3900-H-01701	HVAC REMEDIATION FACILITY CONTROL DIAGRAM
94X-3900-H-01702	HVAC REMEDIATION FACILITY CONTROL DIAGRAM
94X-3900-H-01703	HVAC REMEDIATION FACILITY CONTROL DIAGRAM
94X-3900-H-01704	HVAC REMEDIATION FACILITY CONTROL DIAGRAM
94X-3900-H-01705	HVAC REMEDIATION FACILITY CONTROL DIAGRAM
94X-3900-H-01706	HVAC REMEDIATION FACILITY CONTROL ROOM CONTROL DIAGRAM
94X-3900-H-01709	HVAC REMEDIATION FACILITY EMPTY CONTAINER STAGING ROOM CONTROL DIAGRAM
94X-3900-H-01710	HVAC REMEDIATION FACILITY CONTAINER RAILCAR LOADING AREA CONTROL DIAGRAM

94X-3900-N-01125	PIPING & INSTRUMENT DIAGRAM CONTAINER FILLING SYSTEM SHEET 1 OF 13
94X-3900-N-01126	PIPING & INSTRUMENT DIAGRAM CONTAINER FILLING SYSTEM SHEET 2 OF 13
94X-3900-N-01127	PIPING & INSTRUMENT DIAGRAM CONTAINER FILLING SYSTEM SHEET 3 0F 13
94X-3900-N-01128	PIPING & INSTRUMENT DIAGRAM CONTAINER FILLING SYSTEM SHEET 4 0F 13
94X-3900-N-01129	PIPING & INSTRUMENT DIAGRAM CONTAINER SHIPPING SYSTEM
94X-3900-N-01164	PIPING AND INSTRUMENT DIAGRAM CLARIFIER UNDERFLOW PUMP SYSTEMS
94X-3900-N-01165	PIPING AND INSTRUMENT DIAGRAM SLURRY RECEIPT TANK A
94X-3900-N-01166	PIPING AND INSTRUMENT DIAGRAM SLURRY RECEIPT TANK B
94X-3900-N-01167	PIPING AND INSTRUMENT DIAGRAM SLURRY RECEIPT TANK C
94X-3900-N-01168	PIPING AND INSTRUMENT DIAGRAM CHEMICAL SOLUTION FEED SYSTEMS
94X-3900-N-01169	PIPING AND INSTRUMENT DIAGRAM REACTION & POLYMER ADDITION TANK SYSTEMS
94X-3900-N-01170	PIPING AND INSTRUMENT DIAGRAM CLARIFIER TANK
94X-3900-N-01171	PIPING AND INSTRUMENT DIAGRAM SLURRY FEED SYSTEM C
94X-3900-N-01172	PIPING AND INSTRUMENT DIAGRAM SLURRY FEED SYSTEM B
94X-3900-N-01173	PIPING AND INSTRUMENT DIAGRAM SLURRY FEED SYSTEM A
94X-3900-N-01174	PIPING AND INSTRUMENT DIAGRAM PRODUCT MIXER SYSTEM A
94X-3900-N-01175	PIPING AND INSTRUMENT DIAGRAM PRODUCT MIXER SYSTEM B
94X-3900-N-01176	PIPING AND INSTRUMENT DIAGRAM PRODUCT MIXER SYSTEM C
94X-3900-N-01177	PIPING AND INSTRUMENT DIAGRAM PRODUCT MIXER VENT SCRUBBER
94X-3900-N-01180	PIPING AND INSTRUMENT DIAGRAM SUPERNATANT WATER SYSTEM
94X-3900-N-01181	PIPING AND INSTRUMENT DIAGRAM SLUICE/FLUSH WATER SYSTEM
94X-3900-N-01403	PIPING AND INSTRUMENT DIAGRAM CONTAINER FILLING SYSTEM SHEET 11 OF 13
94X-3900-N-01404	PIPING AND INSTRUMENT DIAGRAM CONTAINER FILLING SYSTEM SHEET 12 OF 13
94X-3900-N-01405	PIPING AND INSTRUMENT DIAGRAM CONTAINER FILLING SYSTEM SHEET 13 0F 13
94X-3900-N-01415	PIPING AND INSTRUMENT DIAGRAM CONTAINER FILLING SYSTEM SHEET 5 OF 13
94X-3900-N-01416	PIPING AND INSTRUMENT DIAGRAM CONTAINER FILLING SYSTEM SHEET 6 OF 13
94X-3900-N-01417	PIPING AND INSTRUMENT DIAGRAM CONTAINER FILLING SYSTEM SHEET 7 OF 13
94X-3900-N-01419	PIPING AND INSTRUMENT DIAGRAM MIXER DRY MATERIAL FEED SYSTEM A
94X-3900-N-01420	PIPING AND INSTRUMENT DIAGRAM MIXER DRY MATERIAL FEED SYSTEM B
94X-3900-N-01421	PIPING AND INSTRUMENT DIAGRAM MIXER DRY MATERIAL FEED SYSTEM C
94X-3900-N-01822	PIPING & INSTRUMENT DIAGRAM CONTAINER FILING SYSTEM SHEET 8 OF 13
94X-3900-N-01823	PIPING & INSTRUMENT DIAGRAM CONTAINER FILING SYSTEM SHEET 9 OF 13
94X-3900-N-01824	PIPING & INSTRUMENT DIAGRAM CONTAINER FILING SYSTEM SHEET 10 0F 13

4822

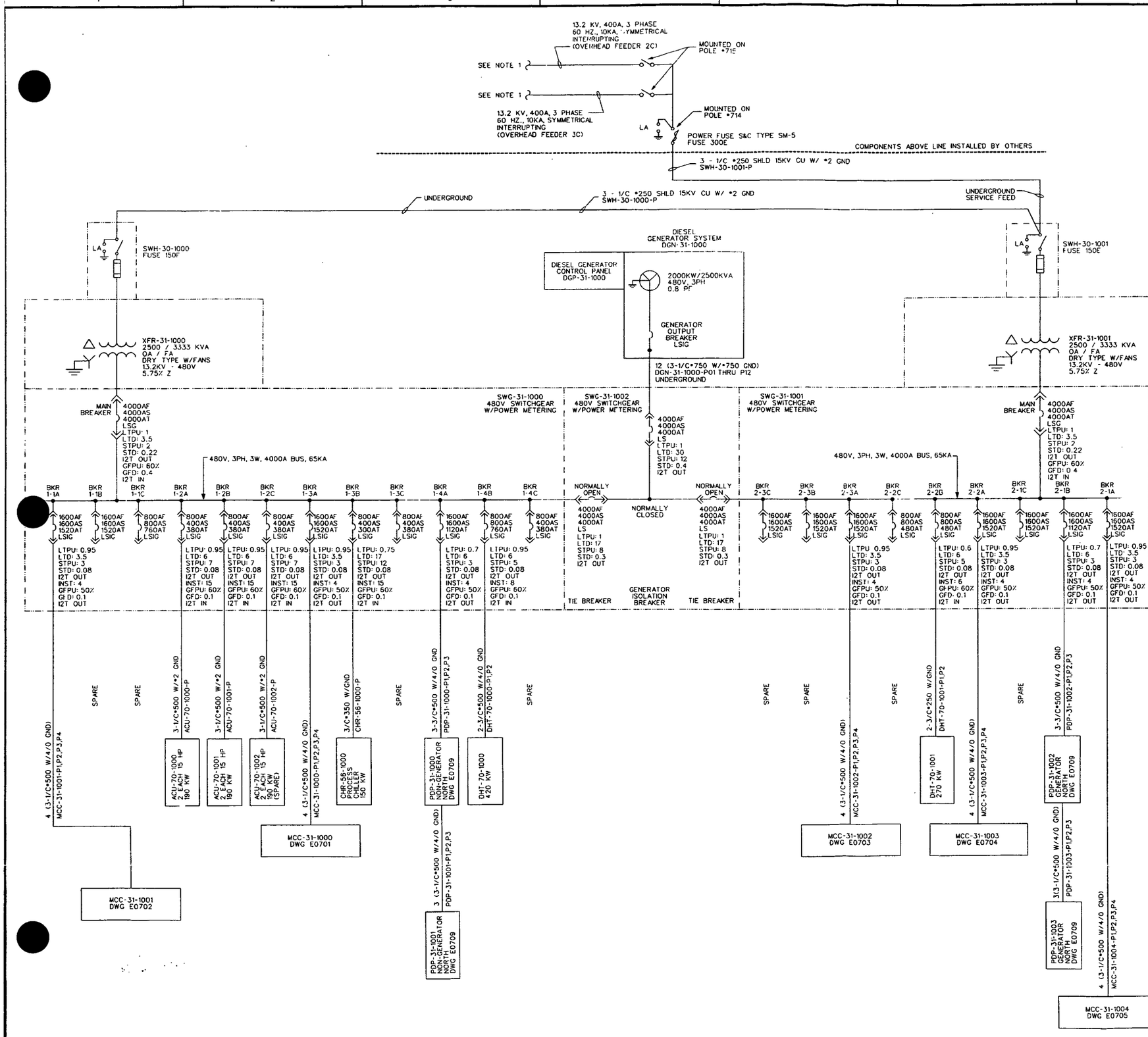

GENERAL NOTES:

1. REFERENCE FEMP DRAWING 96X-5900-E-00358, SHEET E0001 FOR AERIAL DISTRIBUTION.

INFORMATION ONLY

REF DWG NO.	DRAWING TITLE
E0002 & E0004	SYMBOLS, LEGENDS AND ABBREVIATIONS
E0701 - E0705	MCC'S SINGLE LINE DIAGRAMS
E0709	PDP PANEL SCHEDULES
E0710	480V SWITCHGEAR FRONT VIEW

REV. NO.	ISSUE OR REVISION PURPOSE - DESCRIPTION	DATE	REV. BY	APPR.
0	ISSUED FOR CONSTRUCTION	02/20/03	LMJ	TP

INITIALS AND DATE

UNITED STATES DEPARTMENT OF ENERGY
FERNALD ENVIRONMENTAL MANAGEMENT PROJECT

THIS DRAWING PREPARED BY
JE JACOBS
125 Broadway Ave. Oak Ridge, Tennessee 37830 Tel: 865-220-6500 Fax: 865-220-6170

PROJECT NAME: SILOS 1 AND 2

DRAWING TITLE: ELECTRICAL 480V SINGLE LINE DIAGRAM COMPOSITE DIAGRAM

DRAWN BY	DATE	TECHNICAL LEAD	DATE	CHECKED BY	DATE
J. Bowden Jr.	2/20/03	[illegible]	2/20/03	[illegible]	2/20/03

PLANT/BLDG. NO.	FLOOR	SCALE	CLASS
948	N/A	NONE	U

SUBMITTED FOR 30% ISSUE	SUBMITTED FOR 60% ISSUE	SUBMITTED FOR 90% ISSUE
TECH LEAD	TECH LEAD	TECH LEAD
DATE	DATE	DATE

T.O. NUMBER	PROJECT NO.	DRAWING INDEX CODE NO.	SHEET NO.	REV. NO.
N/A	40750	94X-3900-E-01145	E0700	0

JEC PROJECT NO. 35H1960.3 | FILENAME 94XE1145.DGN

000057

DATE: 02/19/03 USER: MOBBJS

4822

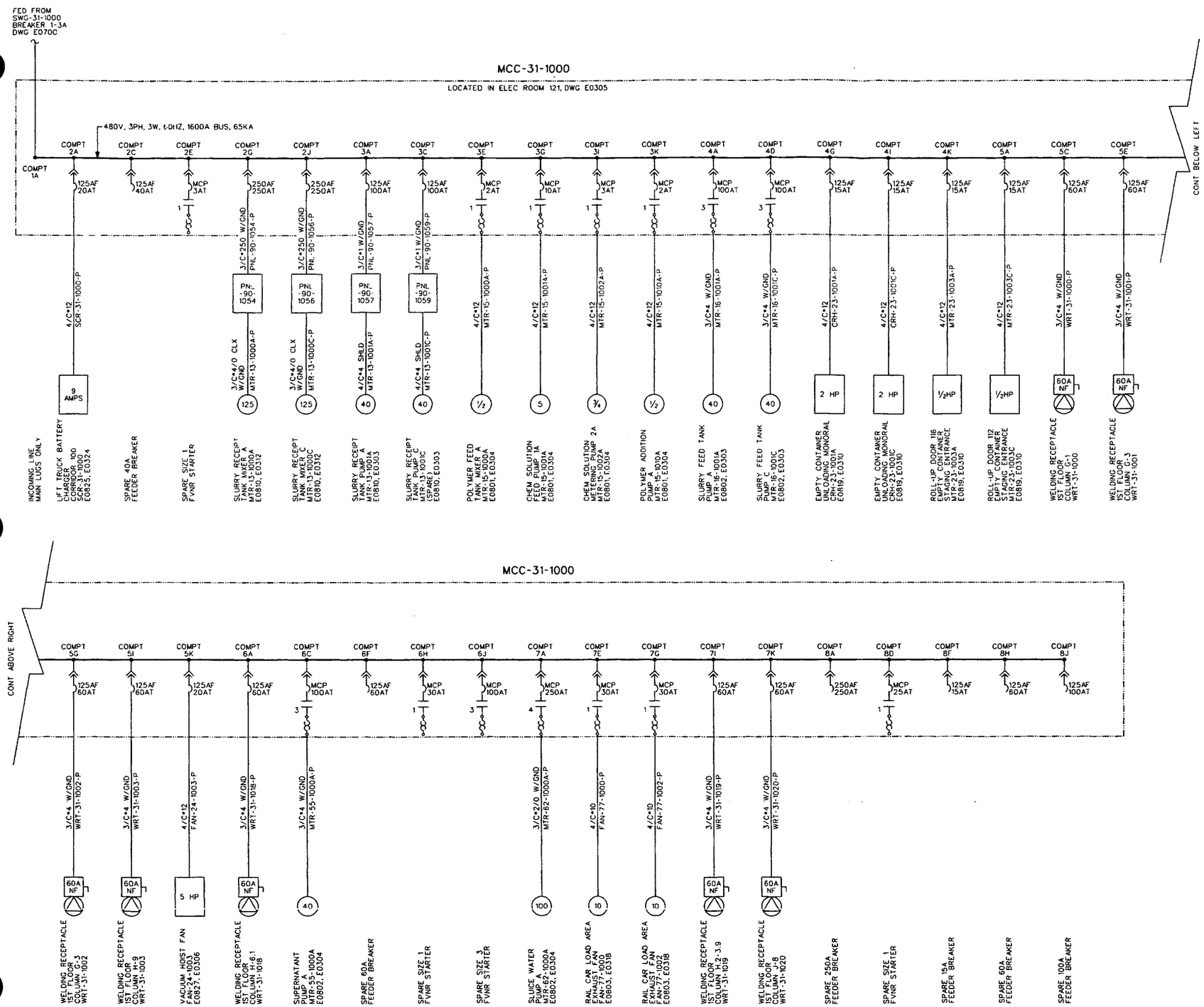

REF DWG NO.	DRAWING TITLE
E0002 & E0004	SYMBOLS, LEGENDS AND ABBREVIATIONS
E0701 - E0705	MCC'S SINGLE LINE DIAGRAMS
E0700	480V SINGLE LINE DIAGRAM - COMPOSITE
E0707	480V MCC FRONT VIEWS

REV. NO.	ISSUE OR REVISION PURPOSE - DESCRIPTION	DATE	REV. BY	APPR.
0	ISSUED FOR CONSTRUCTION	02/20/03	L.G.J.	TE

INITIALS AND DATE

UNITED STATES DEPARTMENT OF ENERGY
FERNALD ENVIRONMENTAL MANAGEMENT PROJECT

THIS DRAWING PREPARED BY
JACOBS
125 Broadway Ave. Oak Ridge, Tennessee 37830 Tel# 865-220-4000 Fax# 865-220-4170

PROJECT NAME: SILOS 1 AND 2

DRAWING TITLE: ELECTRICAL 480V SINGLE LINE DIAGRAM MCC-31-1000

DRAWN BY	DATE	TECHNICAL LEAD	DATE	CHECKED BY	DATE
T. Barber	2/20/03	[illegible]	2/20/03	[illegible]	2/20/03

PLANT/BLDG. NO.	FLOOR	SCALE	CLASS
94B	N/A	NONE	U

SUBMITTED FOR 30% ISSUE — TECH LEAD — DATE
SUBMITTED FOR 60% ISSUE — TECH LEAD — DATE
SUBMITTED FOR 90% ISSUE — TECH LEAD — DATE

T.O. NUMBER	PROJECT NO.	DRAWING INDEX CODE NO.	SHEET NO.	REV. NO.
N/A	40750	94X-3900-E-01146	E0701	0

LEG PROJECT NO. 35H19603 — FILENAME 94XE1146.DGN

INFORMATION ONLY

000059
~~00007~~
58

DATE: 02/13/03 USER: MossJS

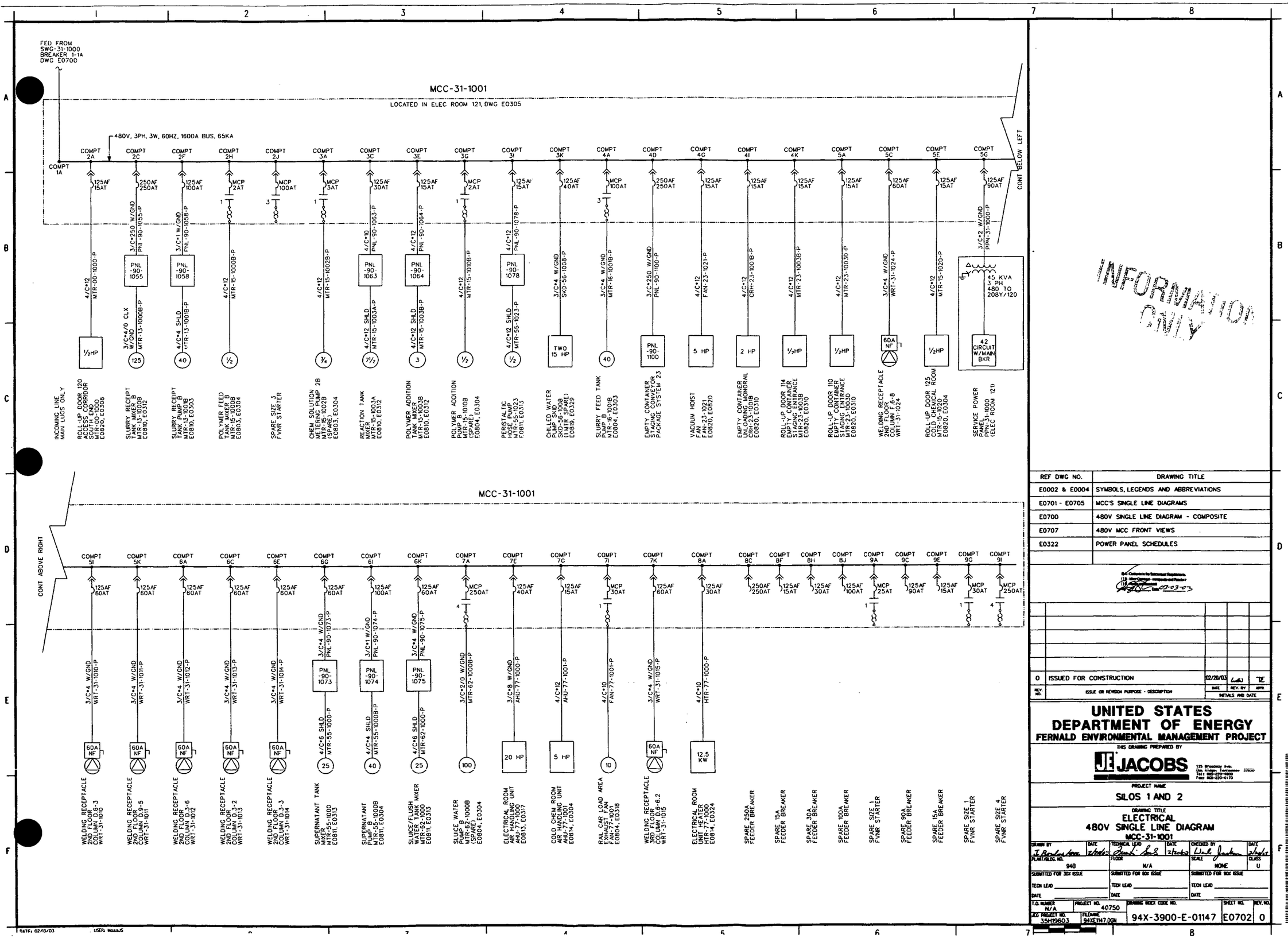

4822

INFORMATION ONLY

REF DWG NO.	DRAWING TITLE
E0002 & E0004	SYMBOLS, LEGENDS AND ABBREVIATIONS
E0701 - E0705	MCC'S SINGLE LINE DIAGRAMS
E0700	480V SINGLE LINE DIAGRAM - COMPOSITE
E0707	480V MCC FRONT VIEWS
E0322	POWER PANEL SCHEDULES

02-03-03

REV. NO.	ISSUE OR REVISION PURPOSE - DESCRIPTION	DATE	REV. BY	APPR.
0	ISSUED FOR CONSTRUCTION	02/20/03	LWS	TE

INITIALS AND DATE

UNITED STATES DEPARTMENT OF ENERGY
FERNALD ENVIRONMENTAL MANAGEMENT PROJECT

THIS DRAWING PREPARED BY
JACOBS
125 Broadway Ave. Oak Ridge, Tennessee 37830 Tel: 865-220-4800 Fax: 865-220-4170

PROJECT NAME
SILOS 1 AND 2

DRAWING TITLE
ELECTRICAL
480V SINGLE LINE DIAGRAM
MCC-31-1001

DRAWN BY	DATE	TECHNICAL LEAD	DATE	CHECKED BY	DATE
J. Bradshaw	2/20/03	[illegible]	2/20/03	Dale Jackson	2/20/03

PLANT/BLDG. NO.	FLOOR	SCALE	CLASS
948	N/A	NONE	U

SUBMITTED FOR 30% ISSUE	SUBMITTED FOR 60% ISSUE	SUBMITTED FOR 90% ISSUE
TECH LEAD	TECH LEAD	TECH LEAD
DATE	DATE	DATE

T.O. NUMBER	PROJECT NO.	DRAWING INDEX CODE NO.	SHEET NO.	REV. NO.
N/A	40750	94X-3900-E-01147	E0702	0

JEC PROJECT NO.	FILENAME
35H19603	94XE1147.DGN

DATE: 02/13/03 USER: MoosJS

59

4822

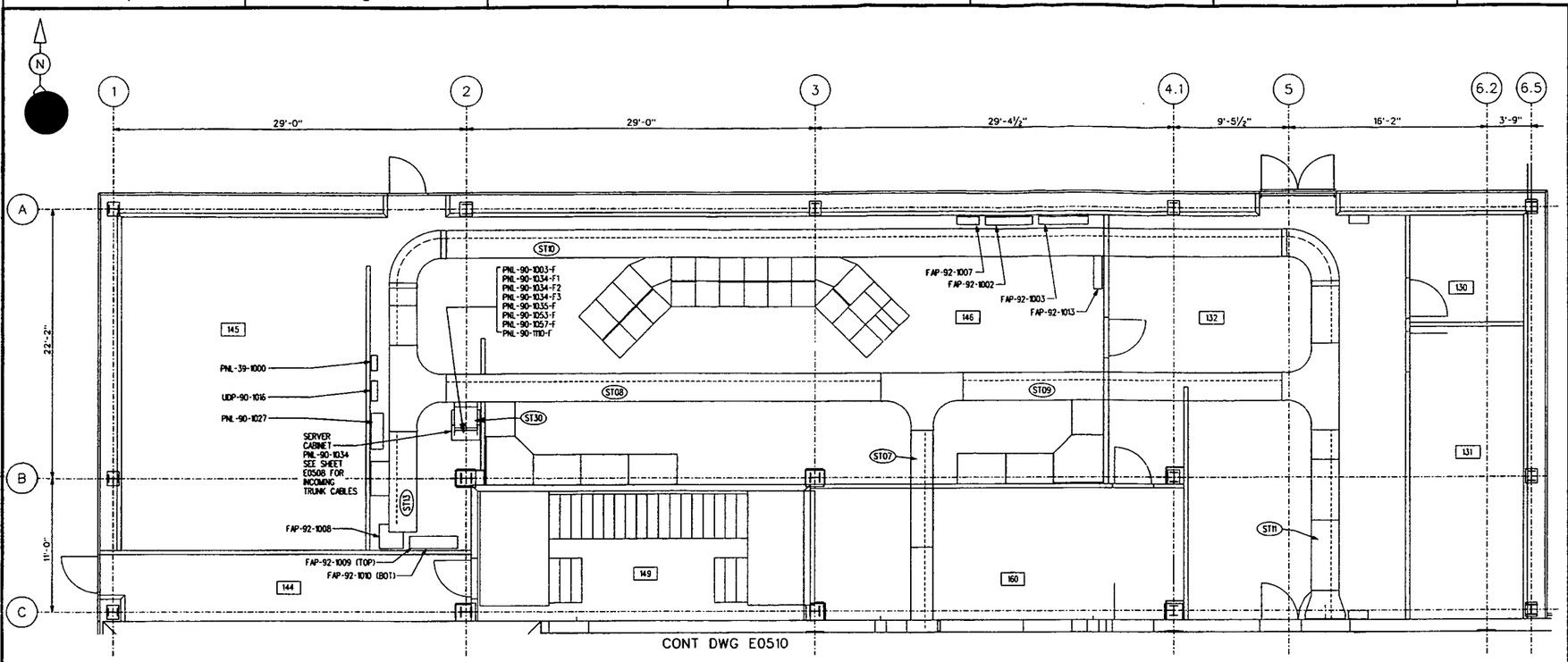

CONT DWG E0510

FIRST FLOOR PLAN

FINISHED FLOOR ELEVATION 575'-0" UNLESS NOTED OTHERWISE

NOTES:

1. CONTRACTOR SHALL UTILIZE SIGNAL SIDE OF CABLE TRAY FOR FIBER OPTIC CABLE INSTALLATION.
2. CONDUIT FOR FIBER OPTIC CABLE SHALL BE 1.5" RIGID GALVANIZED STEEL MINIMUM UNLESS NOTED OTHERWISE.
3. CONDUIT ELBOWS FOR FIBER OPTIC CABLE SHALL BE 24" RADIUS MINIMUM. CONDUIT ELBOWS SHALL BE UTILIZED WHEN A FIBER OPTIC CABLE LEAVES THE CABLE TRAY. ATTACH CONDUIT TO CABLE TRAY USING STANDARD CLAMPS AND ADAPTORS.
4. FIBER OPTIC CABLE CONDUIT INSTALLATION SHALL NOT USE CONDULETS (EXCEPT FOR SEAL FITTINGS). IF A PULL POINT IN A FIBER OPTIC CONDUIT RUN IS REQUIRED, CONTRACTOR SHALL PROVIDE 24" X 4" X 4" STRAIGHT THROUGH PULL BOX, 14 GAUGE, WITH GASKETED SCREW COVER.
5. FIBER OPTIC CABLE LAYING IN CABLE TRAY SHALL BE INSTALLED INSIDE OF 1" ORANGE CORRUGATED INNERDUCT, ENDOT CAT #1050 OR APPROVED EQUAL.

INFORMATION ONLY

REF DWG NO.	DRAWING TITLE
N1211 - N1224	CONTROL SYSTEM ARCHITECTURE NETWORK RISER DIAGRAMS
E0508	COMMUNICATION SYSTEM SITE PLAN
E0510 - E0513	ELECTRICAL FIBER OPTIC SYSTEM DRAWINGS

(1a) Conform to the Referenced Requirements
(1b) Minor Comment - Incorporate and Resubmit
(2) Major Comment - Resubmit
02-03-03

REV. NO.	ISSUE OR REVISION PURPOSE - DESCRIPTION	DATE	REV. BY	APPR.
0	ISSUED FOR CONSTRUCTION	02/20/03	JB	TE

INITIALS AND DATE

UNITED STATES DEPARTMENT OF ENERGY
FERNALD ENVIRONMENTAL MANAGEMENT PROJECT

THIS DRAWING PREPARED BY
JE JACOBS 125 Broadway Ave. Oak Ridge, Tennessee 37830 Tel: 865-220-4800 Fax: 865-220-6170

PROJECT NAME
SILOS 1 AND 2

DRAWING TITLE
ELECTRICAL
FIBER OPTIC SYSTEM
1ST FLOOR LAYOUT - COLUMNS 1-6.5 & A-C

DRAWN BY	DATE	TECHNICAL LEAD	DATE	CHECKED BY	DATE
S. Wilson	2/20/03		2/20/03		2/20/03
PLANT/BLDG NO. 948		FLOOR 1ST FLOOR		SCALE ¼" - 1'-0"	CLASS U
SUBMITTED FOR 30% ISSUE		SUBMITTED FOR 60% ISSUE		SUBMITTED FOR 90% ISSUE	
TECH LEAD		TECH LEAD		TECH LEAD	
DATE		DATE		DATE	

T.O. NUMBER	PROJECT NO.	DRAWING INDEX CODE NO.	SHEET NO.	REV. NO.
N/A	40750	94X-3900-E-01501	E0509	0
J.E.G. PROJECT NO. 35H19603	FILENAME 94XE1501DGN			

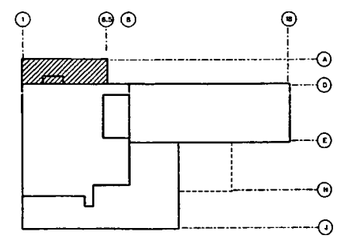

KEY PLAN

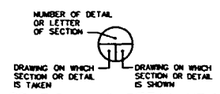

SECTION AND DETAIL KEY

4 0 4 8 12 FT
SCALE: ¼"= 1'-0"

000060

DATE: 02/19/03 USER: MOSS-JS

4822

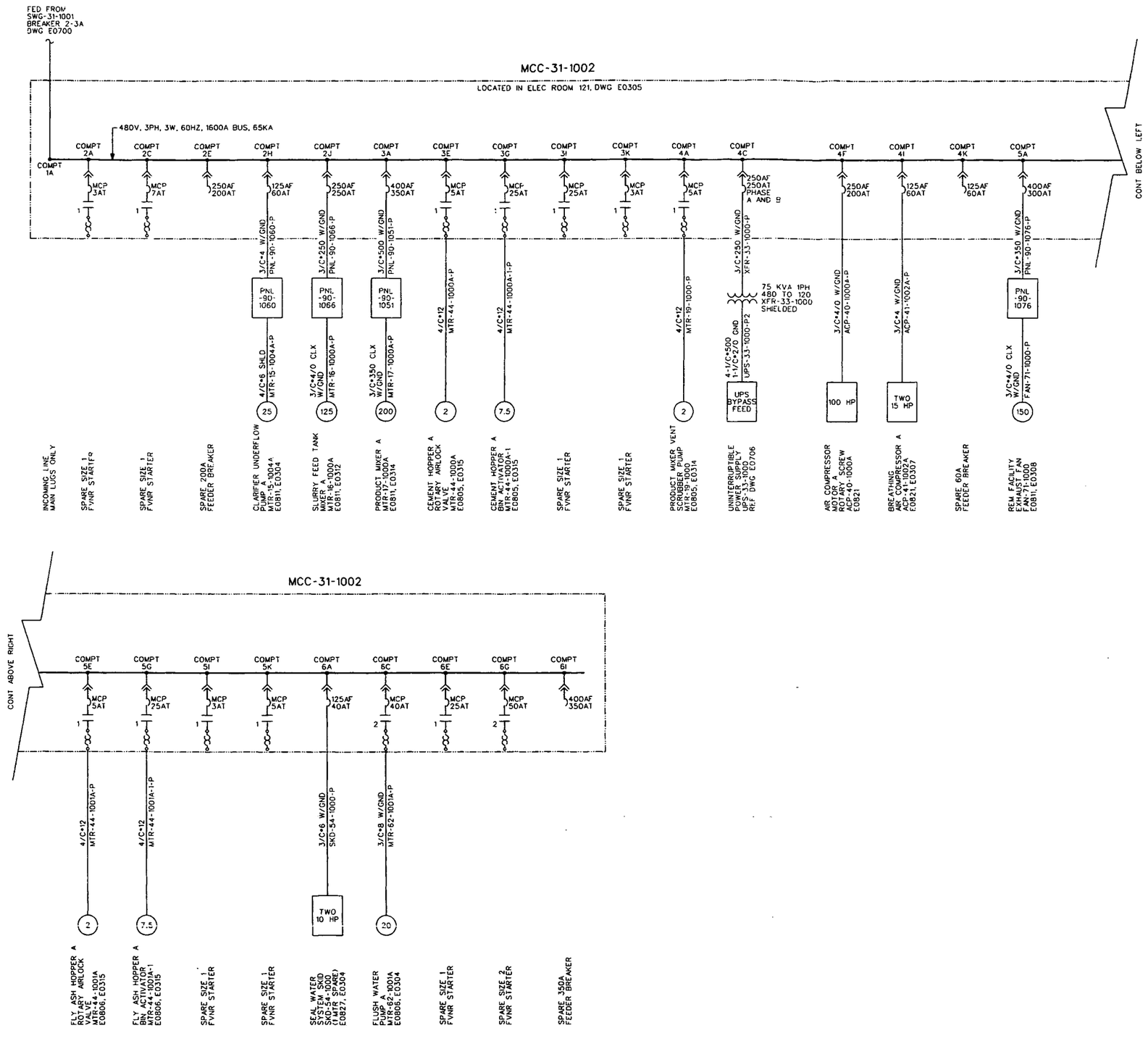

INFORMATION ONLY

REF DWG NO.	DRAWING TITLE
E0002 & E0004	SYMBOLS, LEGENDS AND ABBREVIATIONS
E0701 - E0705	MCC'S SINGLE LINE DIAGRAMS
E0700	480V SINGLE LINE DIAGRAM - COMPOSITE
E0706	UPS SINGLE LINE DIAGRAM
E0707	480V MCC FRONT VIEW

REV. NO.	ISSUE OR REVISION PURPOSE - DESCRIPTION	DATE	REV. BY	APP
0	ISSUED FOR CONSTRUCTION	02/20/03	LAB	TE

INITIALS AND DATE

UNITED STATES DEPARTMENT OF ENERGY
FERNALD ENVIRONMENTAL MANAGEMENT PROJECT

THIS DRAWING PREPARED BY
JACOBS
125 Broadway Ave.
P.O. Box 1100, Oak Ridge, Tennessee 37830
Tel: 865-220-4900
Fax: 865-220-6170

PROJECT NAME
SILOS 1 AND 2

DRAWING TITLE
ELECTRICAL
480V SINGLE LINE DIAGRAM
MCC-31-1002

DRAWN BY	DATE	TECHNICAL LEAD	DATE	CHECKED BY	DATE
	2/20/03		2/20/03		2/20/03

PLANT/BLDG. NO.	FLOOR	SCALE	CLASS
94B	N/A	NONE	U

SUBMITTED FOR 30% ISSUE	SUBMITTED FOR 60% ISSUE	SUBMITTED FOR 90% ISSUE
TECH LEAD	TECH LEAD	TECH LEAD
DATE	DATE	DATE

T.O. NUMBER	PROJECT NO.	DRAWING INDEX CODE NO.	SHEET NO.	REV. NO.
N/A	40750	94X-3900-E-01653	E0703	0

LEC PROJECT NO. 35H19603 — FILENAME 94XE1653.DGN

000061

4822

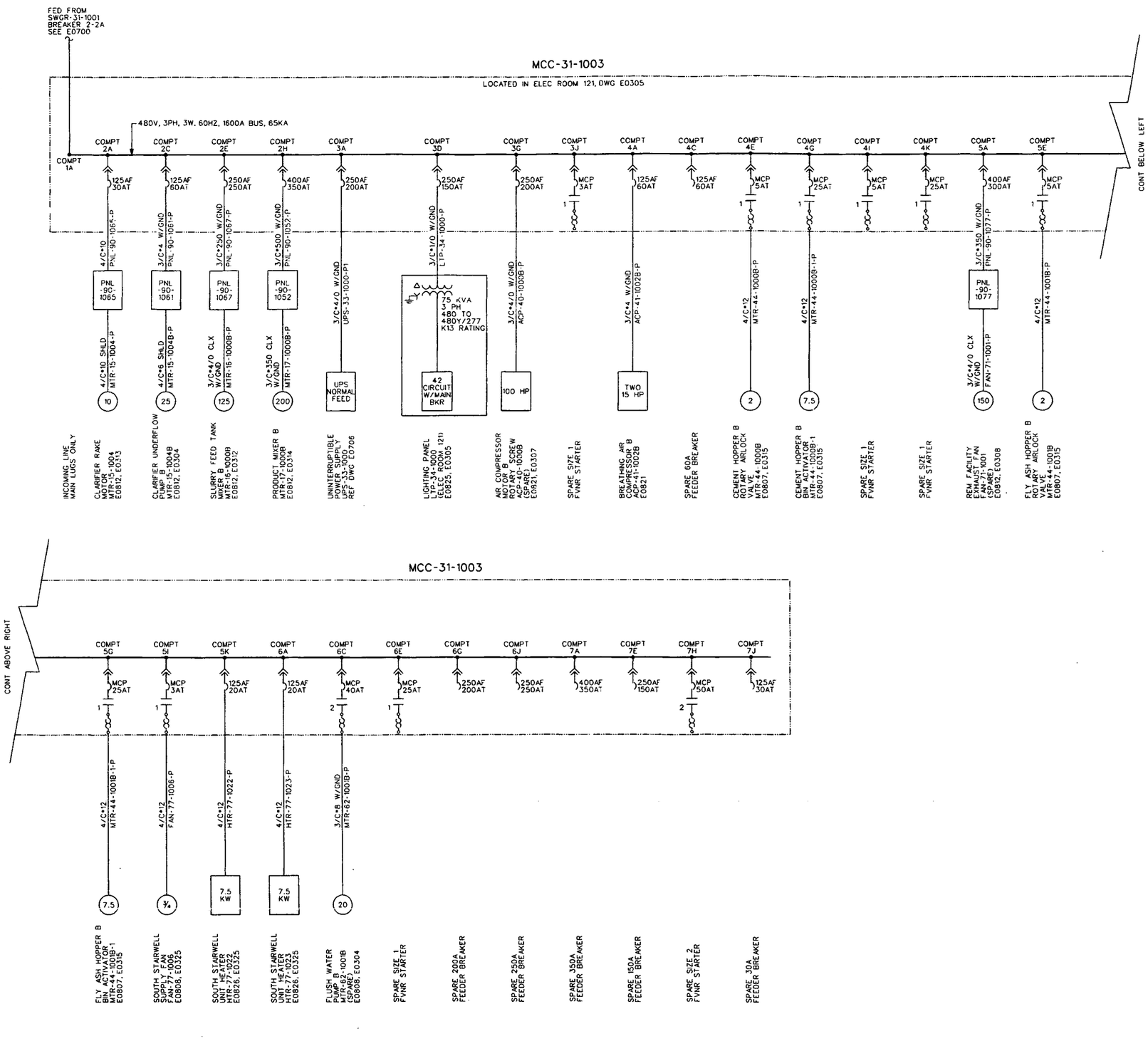

REF DWG NO.	DRAWING TITLE
E0002 & E0004	SYMBOLS, LEGENDS AND ABBREVIATIONS
E0701 - E0705	MCC'S SINGLE DIAGRAMS
E0700	480V SINGLE LINE DIAGRAM - COMPOSITE
E0706	UPS SINGLE LINE DIAGRAM
E0708	480V MCC FRONT VIEWS
E0209	LIGHTING PANEL SCHEDULES

REV NO.	ISSUE OR REVISION PURPOSE - DESCRIPTION	DATE	REV. BY	APPR.
0	ISSUED FOR CONSTRUCTION	02/20/03		TE

INITIALS AND DATE

UNITED STATES DEPARTMENT OF ENERGY
FERNALD ENVIRONMENTAL MANAGEMENT PROJECT

THIS DRAWING PREPARED BY
JACOBS

PROJECT NAME
SILOS 1 AND 2

DRAWING TITLE
ELECTRICAL
480V SINGLE LINE DIAGRAM
MCC-31-1003

DRAWN BY	DATE	TECHNICAL LEAD	DATE	CHECKED BY	DATE
	2/20/03		2/20/03		2/20/03

PLANT/BLDG. NO.	FLOOR	SCALE	CLASS
948	N/A	NONE	U

SUBMITTED FOR 30% ISSUE — TECH LEAD — DATE
SUBMITTED FOR 60% ISSUE — TECH LEAD — DATE
SUBMITTED FOR 90% ISSUE — TECH LEAD — DATE

T.O. NUMBER	PROJECT NO.	DRAWING INDEX CODE NO.	SHEET NO.	REV. NO.
N/A	40750	94X-3900-E-01654	E0704	0

JES PROJECT NO. 35H19603 — FILENAME 94XE1654.DGN

000062

4822

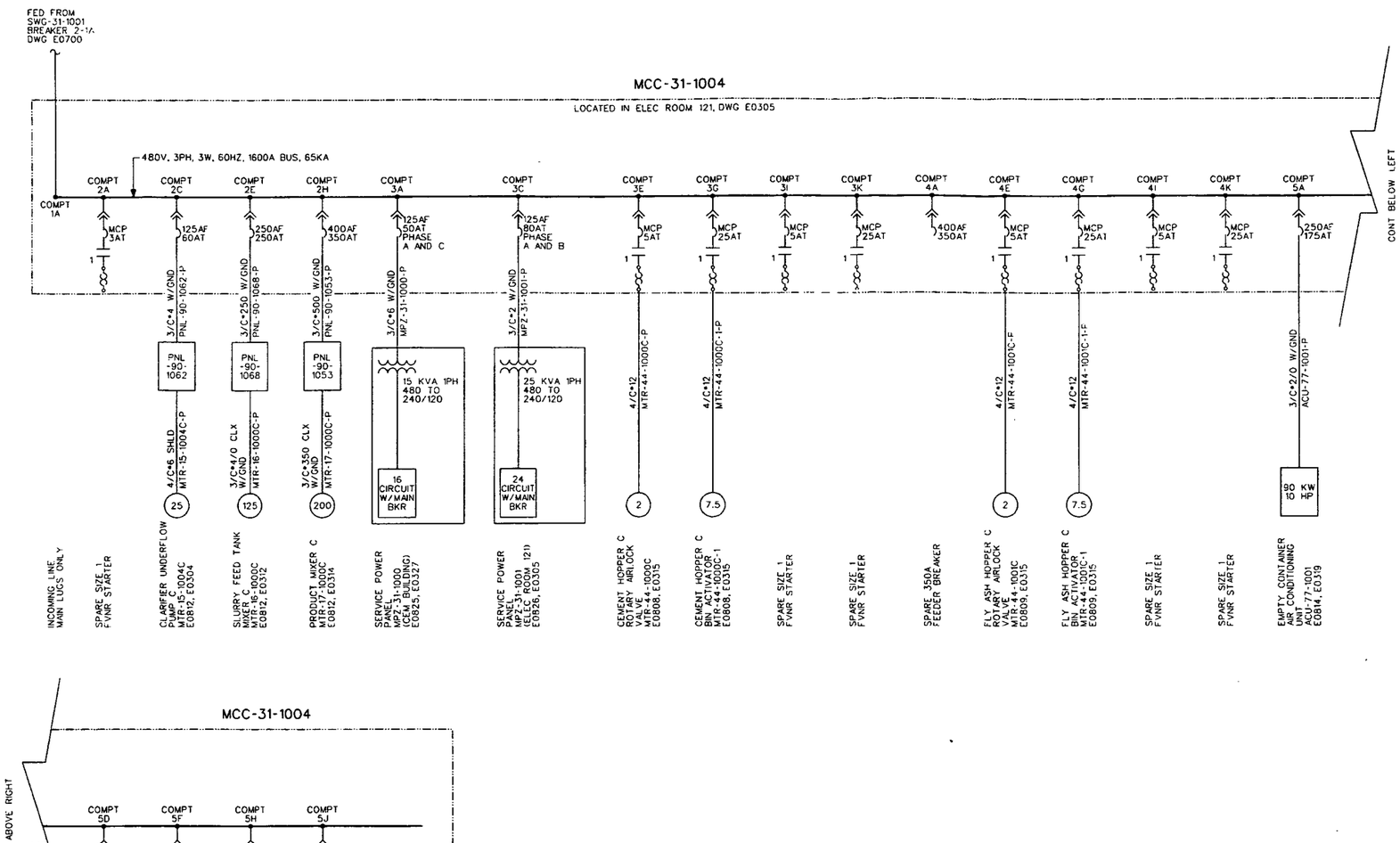

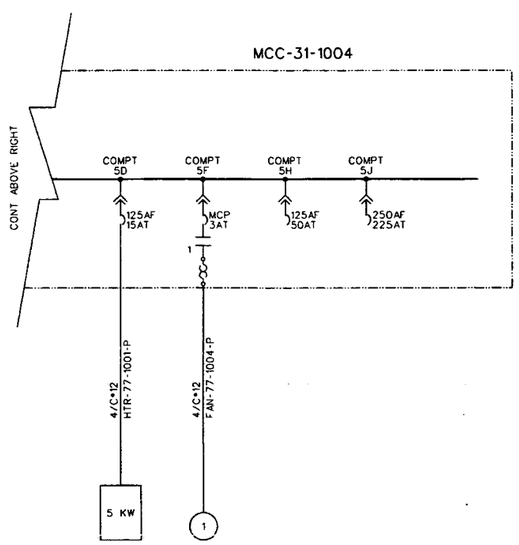

REF DWG NO.	DRAWING TITLE
E0002 & E0004	SYMBOLS, LEGENDS AND ABBREVIATIONS
E0701 - E0705	MCC'S SINGLE LINE DIAGRAMS
E0700	480V SINGLE LINE DIAGRAM - COMPOSITE
E0708	480V MCC FRONT VIEWS

U.S. Department of the Interior, Bureau of Reclamation, Hoover Dam Office, Boulder City, Nevada
03-02-03

REV. NO.	ISSUE OR REVISION PURPOSE - DESCRIPTION	DATE	REV. BY	APPR.
0	ISSUED FOR CONSTRUCTION	02/20/03	LAJ	TE

INITIALS AND DATE

UNITED STATES DEPARTMENT OF ENERGY
FERNALD ENVIRONMENTAL MANAGEMENT PROJECT

THIS DRAWING PREPARED BY
JACOBS
125 Broadway Ave. Suite 610DA, Vancouver, WA 98660
Tel: 360-220-4600
Fax: 360-220-6170

PROJECT NAME
SILOS 1 AND 2

DRAWING TITLE
ELECTRICAL
480V SINGLE LINE DIAGRAM
MCC-31-1004

DRAWN BY	DATE	TECHNICAL LEAD	DATE	CHECKED BY	DATE
J. Bradley	2/24/03	[illegible]	2/24/03	[illegible]	[illegible]

PLANT/BLDG. NO.	FLOOR	SCALE	CLASS
94B	N/A	NONE	U

SUBMITTED FOR 30% ISSUE	SUBMITTED FOR 60% ISSUE	SUBMITTED FOR 90% ISSUE
TECH LEAD	TECH LEAD	TECH LEAD
DATE	DATE	DATE

T.O. NUMBER	PROJECT NO.	DRAWING INDEX CODE NO.	SHEET NO.	REV. NO.
N/A	40750	94X-3900-E-01655	E0705	0

JEG PROJECT NO.	FILENAME
35H19603	94XE1655.DGN

INFORMATION ONLY

000063

DATE: 02/13/03 USER: MOBBJS

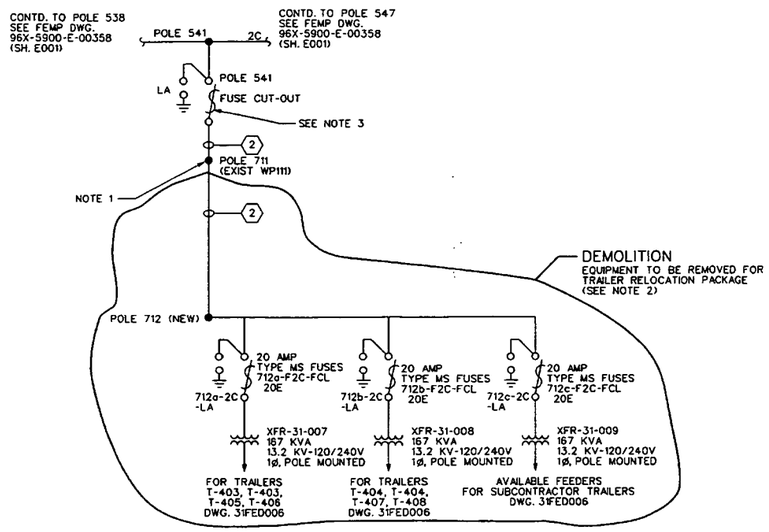

DEMOLITION

(SEE NOTE 5)

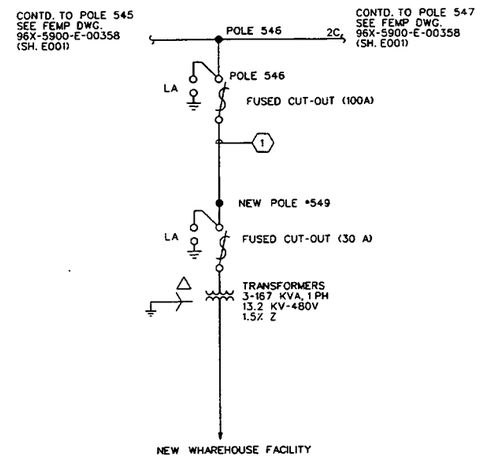

NEW WAREHOUSE FACILITY

(SEE NOTE 7)

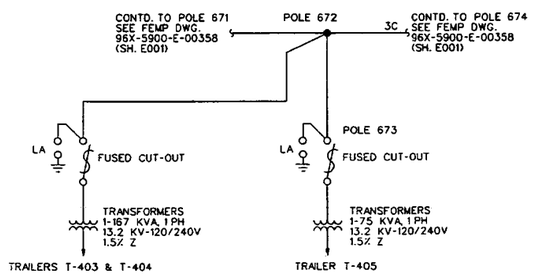

TRAILERS T-403, T-404, T-405

(SEE NOTE 5)

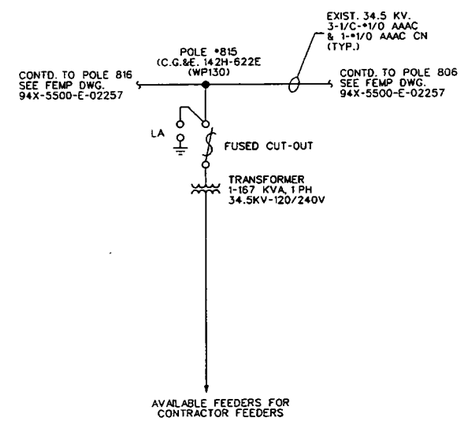

34.5 KV SINGLE LINE DIAGRAM

(SEE NOTE 6)

(REFERENCE DWG.
34.5 KV SINGLE LINE DIAGRAM
94X-5500-E-02257)

NOTES:

4822

1. POLE 711 SHALL NOT BE REMOVED (i.e., POLE WILL REMAIN IN SITU); HOWEVER, PRIMARY POLE-TOP CONSTRUCTION ASSOCIATED WITH BOTTOM X-ARM WILL BE REMOVED.
2. REFERENCE FEMP DRAWING 96X-5900-00358 (SHEET NO. E001) FOR EQUIPMENT INSIDE DEMOLITION BLOCK.
3. OPEN FUSED CUT-OUT AND REMOVE BARREL ASSEMBLY.
4. PRIMARY POLE TOP CONSTRUCTION DETAILS AND EQUIPMENT SELECTION TO BE PERFORMED BY SITE UTILITY GROUP.
5. FOR INFORMATION AND USE IN UPDATING FEMP DRAWING 96X-5900-E-00358. THIS EQUIPMENT INSTALLED VIA TRAILER RELOCATION PACKAGE.
6. FOR INFORMATION AND USE IN UPDATING FEMP DRAWING 96X-5900-E-02257. THIS EQUIPMENT INSTALLED VIA TRAILER RELOCATION PACKAGE.
7. FOR INFORMATION AND USE IN UPDATING FEMP DRAWING 96X-5900-E-00358. THIS EQUIPMENT INSTALLED VIA WAREHOUSE PACKAGE.

LEGEND

(1) 3-1/C #2 ACSR, "SPARROW"

(2) 3-1/C 336 Kcmil, ACSR, "MERLIN"

INFORMATION ONLY

REF DWG NO.	DRAWING TITLE
E0002, E0003	SYMBOLS AND LEGEND DIAGRAMS

000064

REV NO.	ISSUE OR REVISION PURPOSE - DESCRIPTION	DATE	REV. BY	APPR.
A	PRELIMINARY DESIGN ISSUE	04/12/02	JE	WT

INITIALS AND DATE

UNITED STATES
DEPARTMENT OF ENERGY
FERNALD ENVIRONMENTAL MANAGEMENT PROJECT

THIS DRAWING PREPARED BY

JE JACOBS 125 Broadway Ave. Oak Ridge, Tennessee 37830 Tel: 865-220-6900 Fax: 865-220-6130

PROJECT NAME
SILOS 1 AND 2

DRAWING TITLE
ELECTRICAL
SINGLE LINE
13.2 KV & 34.5 KV AERIAL DISTRIBUTION

DRAWN BY	DATE	TECHNICAL LEAD	DATE	CHECKED BY	DATE
[signature]	4/4/02	[signature]	4/4/02	[signature]	04-04-02

PLANT/BLDG. NO.	FLOOR	SCALE	CLASS
00	N/A	NONE	U

SUBMITTED FOR 30% ISSUE	SUBMITTED FOR 60% ISSUE	SUBMITTED FOR 90% ISSUE
TECH LEAD	TECH LEAD	TECH LEAD
DATE	DATE	DATE

T.O. NUMBER	PROJECT NO.	DRAWING INDEX CODE NO.	SHEET NO.	REV. NO.
N/A	40750	94X-3900-E-01656	E3100	A

JEC PROJECT NO.	FILENAME
35H19603	94XE1656.DGN

PRELIMINARY
NOT FOR CONSTRUCTION

4822

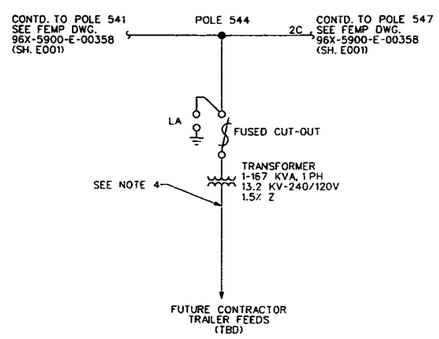

FUTURE CONTRACTOR TRAILERS

(SEE NOTE 8)

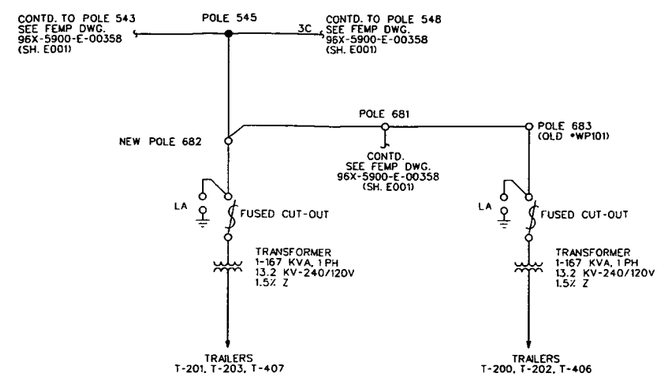

TRAILERS T-200, T-201, T-202, T-203, T-406, T-407

(SEE NOTE 8)

NOTES:

1. POLE 711 SHALL NOT BE REMOVED (i.e., POLE WILL REMAIN INSITU): HOWEVER, PRIMARY POLE-TOP CONSTRUCTION ASSOCIATED WITH BOTTOM X-ARM WILL BE REMOVED.
2. REFERENCE FEMP DRAWING 96X-5900-00358 (SHEET NO. E001) FOR EQUIPMENT INSIDE CLOUD
3. OPEN FUSED CUT-OUT AND REMOVE BARREL ASSEMBLY.
4. THERE ARE NO SECONDARY SERVICE FEEDS. TRANSFORMER INSTALLED FOR FUTURE SERVICE TO CONTRACTOR TRAILERS (TBD).
5. OPEN DISTRIBUTION CUT-OUT, TYPE LA, WITH 200A FUSE HOLDER.
6. PRIMARY POLE TOP CONSTRUCTION DETAILS AND EQUIPMENT SELECTION TO BE PERFORMED BY SITE UTILITY GROUP.
7. REMEDIATION FACILITY PRIMARY POLE TOP CONSTRUCTION AND EQUIPMENT SELECTION TO BE PERFORMED BY JACOBS IN FINAL DESIGN.
8. FOR INFORMATION AND USE IN UPDATING FEMP DRAWING 96X-5900-E-00358. THIS EQUIPMENT INSTALLED VIA TRAILER PACKAGE.

LEGEND

(1) 3-1/C #2 ACSR, "SPARROW"

(2) 3-1/C 336 Kcmil, ACSR, "MERLIN"

INFORMATION ONLY

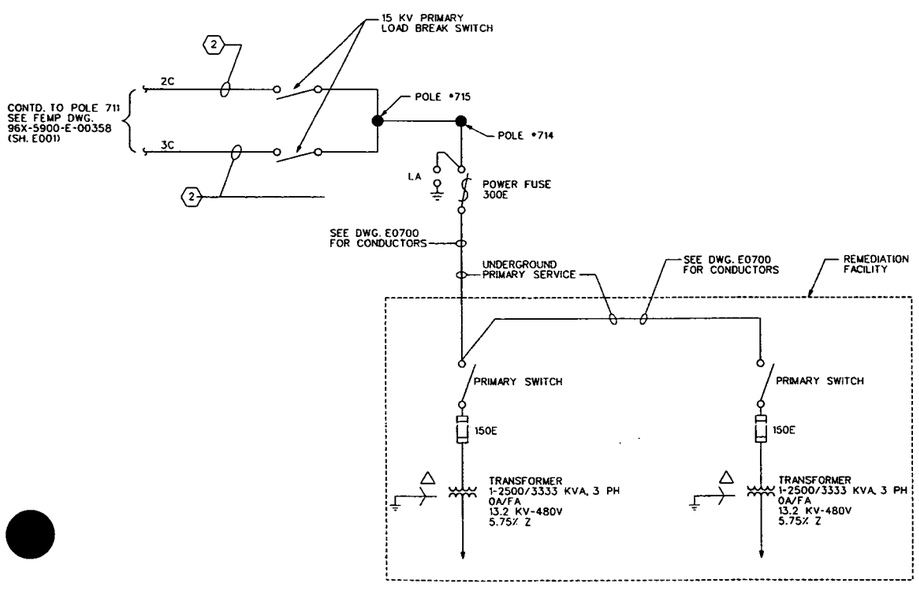

REMEDIATION FACILITY - ELECTRICAL ROOM

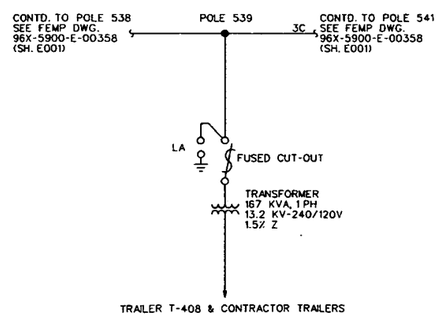

TRAILER T-408

(SEE NOTE 8)

REF DWG NO.	DRAWING TITLE
E0002, E0003	SYMBOLS AND LEGEND DIAGRAMS

03-07-03

REV. NO.	ISSUE OR REVISION PURPOSE - DESCRIPTION	DATE	REV. BY	APPR.
0	ISSUED FOR CONSTRUCTION	02/20/03	TR	TE

INITIALS AND DATE

UNITED STATES DEPARTMENT OF ENERGY
FERNALD ENVIRONMENTAL MANAGEMENT PROJECT

THIS DRAWING PREPARED BY

JE JACOBS

PROJECT NAME: SILOS 1 AND 2

DRAWING TITLE: ELECTRICAL SINGLE LINE
13.2 KV & 34.5 KV AERIAL DISTRIBUTION

DRAWN BY	DATE	TECHNICAL LEAD	DATE	CHECKED BY	DATE
	2/19/03		2/20/03		03-07-03

PLANT/BLDG. NO.	FLOOR	SCALE	CLASS
948	N/A	NONE	U

SUBMITTED FOR 30% ISSUE	SUBMITTED FOR 60% ISSUE	SUBMITTED FOR 90% ISSUE
TECH LEAD	TECH LEAD	TECH LEAD
DATE	DATE	DATE

I.D. NUMBER	PROJECT NO.	LEADING INDEX CODE NO.	SHEET NO.	REV. NO.
N/A	40750	94X-3900-E-01657	E3101	0
JEG PROJECT NO. 35H19603	FILENAME 94XE1657.DGN			

000065

4822

ELECTRICAL SYMBOLS PLAN DRAWINGS POWER AND LIGHTING

SYMBOLS	DESCRIPTION
	LIGHTING FIXTURE, CEILING OR PENDANT MOUNT
	LIGHTING FIXTURE, WALL, COLUMN OR BRACKET MOUNT
	LIGHTING FIXTURE, STANCHION MOUNT
	FLUORESCENT LIGHTING FIXTURE. TYPE, VOLTAGE, WATTAGE AND MOUNTING AS INDICATED
	COMBINATION EXIT SIGN/EMERGENCY LIGHT, WALL MOUNTED ARROW INDICATES DIRECTION
1000 2 18'-0"	LIGHTING FIXTURE INDICATION (TYP.) 1000 - PANEL NUMBER IF SHOWN 2 - CIRCUIT NUMBER 1 - FIXTURE SPECIFICATION (SEE FIXTURE SCHEDULE) 18'-0" - MOUNTING HEIGHT IF SHOWN
	DUPLEX RECEPTACLE
WP	DUPLEX RECEPTACLE, WEATHERPROOF
DG	DUPLEX RECEPTACLE, RED (DIESEL GENERATOR)
2 1000	RECEPTACLE INDICATION (TYP.) 2 - CIRCUIT NUMBER 1000 - PANEL NUMBER IF SHOWN
	SINGLE RECEPTACLE, 4 POLE, 3 WIRE, POLARIZED. 3 PHASE, 480V RATING AS SPECIFIED
S	SWITCH
S^2	SWITCH INDICATION (TYP.) 2 - CIRCUIT NUMBER
S_D	SWITCH, DIMMER
	CONDUIT DOWN, OFF DRAWING
	CONDUIT UP, OFF DRAWING
	CONDUIT TERMINATED AT TRAY
	CONDUIT RUN, CONCEALED BELOW FLOOR AND UNDERGROUND AS NOTED
3/4"C-7*10	WIRE SIZES AND CONDUIT ARE CALLED OUT AS SHOWN. ¾" CONDUIT WITH 7 EACH #10 AWG WIRES.
	ELECTRIC MOTOR

ELECTRICAL SYMBOLS PLAN DRAWINGS GROUNDING

SYMBOLS	DESCRIPTION
	GROUND TEST WELL
	GROUND ROD
	EXOTHERMIC TYPE CONNECTOR AS NOTED
	4-HOLE GROUND PLATE AS NOTED
	MECHANICAL CONNECTION AS NOTED
	GROUND WIRE, TINNED COPPER CABLE, BURIED/ CONCEALED
	GROUND WIRE, TINNED COPPER CABLE, EXPOSED
10	GROUND PIGTAIL, NUMBER INDICATES LENGTH

ELECTRICAL SYMBOLS SINGLE LINE DIAGRAM

SYMBOLS	DESCRIPTION
	BUS
	POWER CONDUCTOR
	SEPARABLE CONNECTOR
	GROUND
L.A.	LIGHTNING ARRESTER AND GROUND CONNECTION
PNL -90- 1057	VARIABLE FREQUENCY (SC) DRIVE
G	G=GENERATOR, KVA AND PF AS NOTED
	CUT-OUT
	FUSED SWITCH
	POWER TRANSFORMER
	DELTA-WYE CONNECTION SYMBOL WITH NEUTRAL GROUNDED
	DELTA-WYE CONNECTION SYMBOL WITH RESISTANCE GROUND ON NEUTRAL
AF AT	MOLDED CASE CIRCUIT BREAKER, LOW VOLTAGE AF - AMP FRAME AT - AMP TRIP
AF AS AT	LOW VOLTAGE SWITCHGEAR CIRCUIT BREAKER AF - AMP FRAME AS - AMP SENSOR AT - AMP TRIP
	TRANSFER SWITCH, SHOWN IN NORMAL OPERATING POSITION
MCP 3AT 1	COMBINATION MAGNETIC STARTER AND MOTOR CIRCUIT PROTECTOR (MCP) 3AT - CONTINUOUS RATING 1 - STARTER SIZE 1
10	3Ø ELECTRIC MOTOR, NUMBER INDICATES HORSEPOWER
	CONTACT, NORMALLY OPEN
	CONTACT, NORMALLY CLOSED
	THERMAL ELEMENT (OVERLOAD)
60A NF	WELDING RECEPTACLE WITH 60A NON-FUSED DISCONNECT SWITCH

ELECTRICAL SYMBOLS MISCELLANEOUS

SYMBOLS	DESCRIPTION
E-XX	ELECTRICAL WALL OPENING XX - INDIVIDUALLY NUMBERED FOR INFORMATION REGARDING WALL OPENINGS REFERENCE ARCHITECTURAL CONSTRUCTION SPECIFICATIONS 04200, MASONRY AND 09260, GYPSUM BOARD ASSEMBLIES.

INFORMATION ONLY

REF DWG NO.	DRAWING TITLE
E0004	ABBREVIATIONS, ACRONYMS AND NOTES

Conforms to the Submittal Requirements
G - Sheet Contains - Incorporate and Resubmit
Date 2-20-03

REV. NO.	ISSUE OR REVISION PURPOSE - DESCRIPTION	DATE	REV. BY	APPR.
0	ISSUED FOR CONSTRUCTION	02/20/03	JHR	TE

INITIALS AND DATE

UNITED STATES DEPARTMENT OF ENERGY
FERNALD ENVIRONMENTAL MANAGEMENT PROJECT

THIS DRAWING PREPARED BY

JE JACOBS
1111 Broadway, Ste.
Oak Ridge, Tennessee 37830
Tel: 865-220-4800
Fax: 865-220-6170

PROJECT NAME
SILOS 1 AND 2

DRAWING TITLE
ELECTRICAL SYMBOLS AND LEGEND

DRAWN BY	DATE	TECHNICAL LEAD	DATE	CHECKED BY	DATE
	2/20/03		2/20/03		2/20/03

PLANT/BLDG. NO.	FLOOR	SCALE	CLASS
00	N/A	NONE	U

SUBMITTED FOR 30% ISSUE	SUBMITTED FOR 60% ISSUE	SUBMITTED FOR 90% ISSUE
TECH LEAD	TECH LEAD	TECH LEAD
DATE	DATE	DATE

T.O. NUMBER	PROJECT NO.	DRAWING INDEX CODE NO.	SHEET NO.	REV. NO.
N/A	40750	94X-3900-E-01659	E0002	0

JEG PROJECT NO.	FILENAME
35H19603	94XE1659.DGN

000066

DATE: 02/20/03 , USER: TGarty

ELECTRICAL SYMBOLS SINGLE LINE DIAGRAM

SYMBOLS	DESCRIPTION
	BUS
	BUS DUCT
	POWER CONDUCTOR
	CONNECTION OF CONDUCTORS
	SEPARABLE CONNECTOR
	GROUND
	HIGH OR LOW VOLTAGE DISCONNECT SWITCH
	SURGE ARRESTER AND GROUND CONNECTION
	CABLE TERMINATION
	TAP CONNECTION
ASDS	ADJUSTABLE SPEED DRIVE SYSTEM (ASDS)
G	G=GENERATOR, KVA AND PF AS NOTED PMG=PERMANENT MAGNET GENERATOR
AC MVA	MEDIUM VOLTAGE SWITCHGEAR, VACUUM CIRCUIT BREAKER, DRAWOUT TYPE (DEVICE 52). A=AMPERE CARRYING CAPACITY, MVA=INTERRUPTING CAPACITY IN MVA
C	CONTACTOR
	FUSE
	POWER TRANSFORMER WITH AUTOMATIC TAP CHANGING
	POWER TRANSFORMER
	DELTA-WYE CONNECTION SYMBOL WITH NEUTRAL GROUNDED
	DELTA-WYE CONNECTION SYMBOL WITH RESISTANCE GROUND ON NEUTRAL
AF AT E	MOLDED CASE CIRCUIT BREAKER, LOW VOLTAGE (DEVICE 52). AF=AMPERE FRAME RATING, AT=AMPERE TRIP RATING, E=ELECTRICALLY OPERATED, SHTR=SHUNT TRIP, NO=NORMALLY OPEN,NC=NORMALLY CLOSED, WITHOUT CIRCLE=MANUALLY OPERATED
AF AT LSG	LOW VOLTAGE SWITCHGEAR POWER AIR CIRCUIT BREAKER, DRAWOUT TYPE (DEVICE 52) WITH SOLID STATE TRIP DEVICE. L=LONG TIME PICKUP I=INSTANTANEOUS PICKUP, S=SHORT TIME PICKUP, G=GROUND FAULT PICKUP WITH DELAY
N E ATS	TRANSFER SWITCH (ATS INDICATES "AUTOMATIC") WHERE INDICATED "E" - DENOTES EMERGENCY "N" - DENOTES NORMAL
	INTERLOCKED STARTER, ONE MOTOR RUNNING AT A TIME
15A MCP 2 R	COMBINATION MAGNETIC STARTER AND MOTOR CIRCUIT PROTECTOR (MCP) 15A DENOTES CONTINUOUS CURRENT RATING 2 DENOTES STARTER SIZE 2 R DENOTES REVERSING STARTER 2S DENOTES TWO-SPEED STARTER
15A MCP 1 2S-R	COMBINATION MAGNETIC STARTER AND MOTOR CIRCUIT PROTECTOR (MCP) 15A DENOTES CONTINUOUS CURRENT RATING 2S-R DENOTES TWO-SPEED REVERSING
2 2	FUSED VOLTAGE TRANSFORMER DRAWOUT TYPE 2=NUMBER REQUIRED

ELECTRICAL SYMBOLS SINGLE LINE DIAGRAM

SYMBOLS	DESCRIPTION
10	ELECTRIC MOTOR, NUMBER INDICATES HORSEPOWER
	CONTACT, NORMALLY OPEN
	CONTACT, NORMALLY CLOSED
	THERMAL ELEMENT
+ −	BATTERY
K	INTERLOCK K=KEY, R=RELAY, ARROWS TERMINATE AT INTERLOCKED DEVICES
3 ST,SP,J	PUSHBUTTON STATION. 3=NUMBER OF STATIONS, RES=RESET, OP=OPEN, CL=CLOSE, EX=EXTEND, RETR=RETRACT, ST=START, SP=STOP, FWD=FORWARD, R=REVERSE, L=LEFT, R=RIGHT, J=JOG, U=UP, DN=DOWN, FA=FAST, SL=SLOW, HD=HAND, O=OFF, A=AUTO
M	MEDIUM VOLTAGE SWITCHGEAR, FUSABLE DRAW-OUT CONTACTOR AND FULL VOLTAGE NONREVERSING MOTOR CONTROLLER
3	CURRENT TRANSFORMERS 3=NUMBER REQUIRED PST= PHASE SHIFT TRANSFORMER
	WINDOW TYPE CURRENT TRANSFORMER
	ISOLATION TRANSFORMER
PST 3	POTENTIAL TRANSFORMER 3=NUMBER REQUIRED PST=PHASE-SHIFT-TRANSFORMER
A	INSTRUMENT, A=AMMETER, V=VOLTMETER, W=WATTMETER, KWH=KILOWATT HOUR METER, PF=POWER FACTOR METER, VAR=VARMETER, MA=MILLIAMMETER, FM=FREQUENCY METER TT=ELAPSED TIME METER, TM=TACHOMETER KWHDM=KILOWATT HOUR DEMAND METER,RTM=RECORDING TACHOMETER, IT=CURRENT TRANSDUCER TOT=TOTALIZING KW=KILOWATT METER KVAR=KILOVAR METER
AS	INSTRUMENT SWITCH, AS=AMMETER SWITCH, VS=VOLTMETER SWITCH, SS=SYNCHRONIZING SWITCH, TSW=TEST SWITCH, PB=PUSHBUTTON, RCSW=REMOTE CONTROL SWITCH, CS=CONTROL SWITCH TMS=TACHOMETER SWITCH
50 51 3	PROTECTIVE RELAYS. 3 DENOTES NUMBER REQUIRED, NUMBER IN THE CIRCLE INDICATES DEVICE NUMBER AND FUNCTIONS 15 -SPEED OR FREQUENCY MATCHING DEVICE 25 -SYNCHRONIZING OR SYNCHRONISM-CHECK DEVICE 25A-AUTOMATIC SYNCHRONIZER 26 -APPARATUS THERMAL DEVICE 27 -UNDERVOLTAGE RELAY 32 -DIRECTIONAL POWER RELAY 40 -FIELD RELAY 41 -FIELD CIRCUIT BREAKER 43 -MANUAL TRANSFER OR SELECTOR DEVICE 46 -REVERSE PHASE OR PHASE BALANCE CURRENT RELAY 47 -PHASE SEQUENCE VOLTAGE RELAY 50 -INSTANTANEOUS OVERCURRENT RELAY 50N-INSTANTANEOUS NEUTRAL OVERCURRENT RELAY 50G-INSTANTANEOUS GROUND OVERCURRENT RELAY 51 -AC TIME OVERCURRENT RELAY 51N -AC TIME OVERCURRENT NEUTRAL RELAY 51G -AC TIME OVERCURRENT GROUND RELAY 51GS -INSTANTANEOUS GROUND SENSOR 51V -AC TIME OVERCURRENT RELAY WITH VOLTAGE RESTRAINT 52 -AC CIRCUIT BREAKER 55 -POWER FACTOR RELAY 59 -OVERVOLTAGE RELAY, T-INDICATES TRIP, V-INDICATES VOLTAGE 60 -VOLTAGE OR CURRENT BALANCE RELAY 62 -TIME DELAY RELAY 63 -PRESSURE SWITCH 64 -GROUND PROTECTIVE RELAY 64F -FIELD GROUND PROTECTIVE RELAY 65 -GOVERNOR 67 -AC DIRECTIONAL OVERCURRENT RELAY 67N -RESIDUALLY CONNECTED TIME AND INSTANTANEOUS DIRECTIONAL GROUND OVERCURRENT RELAY 69 -PERMISSIVE CONTROL DEVICE 79 -RECLOSING RELAY 79CO-RECLOSING CUT OFF SWITCH 81 -FREQUENCY RELAY 86 -LOCKOUT RELAY,HAND RESET (HR) B-INDICATES BUS,GB-INDICATES GENERATOR BACKUP PROTECTION,GP-INDICATES GENERATOR PRIMARY PROTECTION 87 -DIFFERENTIAL PROTECTIVE RELAY 87G-GENERATOR 87B-BUS
27X	SUFFIX "X" WITH DEVICE NUMBER INDICATES AUXILIARY RELAY
PLC	PROGRAMMABLE LOGIC CONTROLLER
THMS	MOTOR AUXILIARIES, RTD=RESISTANCE TEMPERATURE DETECTOR, THMS=THERMISTOR, VIB SW=VIBRATION SWITCH
R	NEUTRAL GROUNDING RESISTOR SIZE AS INDICATED
H	HEATER
	WELDING RECEPTACLE
	EQUIPMENT ENCLOSURE

ELECTRICAL SYMBOLS SCHEMATIC DIAGRAMS

SYMBOLS	DESCRIPTION
	LOCKOUT EMERGENCY STOP PUSHBUTTON - MAINTAINED CONTACT
L OFF R X X	SWITCH, SELECTOR, 3-POSITION, X = CONTACT CLOSED IN THAT POSITION HOA = "HAND-OFF-AUTOMATIC" LOR = "LOCAL-OFF-REMOTE"
	PUSHBUTTON, MOMENTARY CONTACT
	LEVEL SWITCH
	PRESSURE SWITCH
	TEMPERATURE SWITCH
	LIMIT SWITCH
TDOD	CONTACT WITH TIME DELAY ON DE-ENERGIZATION
TDOE	CONTACT WITH TIME DELAY ON ENERGIZATION
	OPEN CONTACT } THE POSITION OF THE CONTACT IN A RELAY IS SHOWN WITH THE COIL DE-ENERGIZED AND IN A SELECTOR SWITCH AT THE "OFF" POSITION
	CLOSED CONTACT }
a	a DENOTES AN AUXILIARY CONTACT OF A BREAKER OR STARTER COIL. CONTACT IS ALWAYS OPEN WHEN MAIN CONTACTS ARE OPEN.
b	b DENOTES AN AUXILIARY CONTACT OF A BREAKER OR STARTER COIL. CONTACT IS ALWAYS CLOSED WHEN MAIN CONTACTS ARE OPEN.
CR 1	RELAY COIL (NUMBER INDICATES RELAY COIL TAG NO.)
CRL 1	RELAY COIL (NUMBER INDICATES RELAY COIL TAG NO.) CRL=LATCH COIL, CRU=UNLATCH COIL
TR 2	TIME DELAY RELAY COIL (NUMBER IDENTIFIES RELAY COIL)
RIL	INDICATING LIGHT. A=AMBER, B=BLUE, C=CLEAR, G=GREEN, N=NEON, R=RED, W=WHITE, Y=YELLOW,
OL'S	MAGNETIC STARTER OVERLOAD RELAY CONTACTS.
A	INSTRUMENT, A=AMMETER, V=VOLTMETER, W=WATTMETER, KWH=KILOWATT HOUR METER, CMA=CONTACT MAKING AMMETER, PF=POWER FACTOR METER, VAR=VARMETER, MA=MILLI-AMMETER, AH=AMPERE-HOUR METER, TT=ELAPSED TIME METER
	RECTIFIER DIODE
	SOLENOID VALVE
	HYDRAULIC MANIFOLD TERMINAL
	FIELD DEVICE TERMINAL
	LEVEL CONTROLLER TERMINAL
	TERMINAL IN PROGRAMMABLE CONTROLLER
	BURNER MANAGEMENT PANEL TERMINAL
	TERMINAL IN 480V MCC OR SWITCHRACK
	FIELD DEVICE TERMINAL IN VENDOR SUPPLIED POWER & CONTROL BOX
	LOCAL CONTROL PANEL TERMINAL
	JUNCTION BOX TERMINAL
	PRIMARY ELEMENT TERMINAL
	ANNUNCIATOR TERMINAL
5 6 7 8 9 TB-A	TERMINAL BLOCK "A". NUMERAL INDICATES TERMINAL NUMBER
1 2 3 A	NUMBERS INDICATE THE DESIGNATION OF CONDUCTORS, LETTER INDICATES THE DESIGNATION OF CONDUIT, CABLE, OR WIRE BUNDLE

COMMUNICATIONS SYMBOLS BLOCK DIAGRAMS

SYMBOLS	DESCRIPTION
	TRANSMITTING/RECEIVING ANTENNA (SUPPORT RADIO SYSTEM)
	TRANSMITTING ANTENNA
	RADIO RECEIVING ANTENNA
S	CONE SPEAKER
H	HORN SPEAKER
	TV CAMERA
M2	CCTV MONITOR M2=MONITOR NUMBER
	LOCAL HEADSET
	50-OHM TERMINATION
	PORTABLE RADIO STATION ANTENNA JACK
	PLUG-IN CONNECTOR
	IMPEDANCE MATCHING SPEAKER TRANSFORMER
	LOCAL MICROPHONE
	ARROW INDICATES DIRECTION OF SIGNAL FLOW
	ARROW INDICATES DIRECTION OF POWER FLOW

4822

INFORMATION ONLY

REF DWG NO.	DRAWING TITLE
E0002 - E0004	SYMBOLS, LEGENDS AND ABBREVIATIONS

000067

REV. NO.	ISSUE OR REVISION PURPOSE - DESCRIPTION	DATE	REV. BY	APPR.
A	PRELIMINARY DESIGN ISSUE	04/12/02	TE	WT

INITIALS AND DATE

UNITED STATES DEPARTMENT OF ENERGY
FERNALD ENVIRONMENTAL MANAGEMENT PROJECT

THIS DRAWING PREPARED BY

JE JACOBS 125 Broadway Ave. Oak Ridge, Tennessee 37830 Tel: 865-220-4800 Fax: 865-220-6170

PROJECT NAME
SILOS 1 AND 2

DRAWING TITLE
ELECTRICAL
SYMBOLS AND LEGEND
SINGLE LINE & SCHEMATIC DIAGRAMS

DRAWN BY	DATE	TECHNICAL LEAD	DATE	CHECKED BY	DATE
[signature]	4/4/02	[signature]	4/4/02	[signature]	[signature]

PLANT/BLDG. NO.	FLOOR	SCALE	CLASS
00	N/A	NONE	U

SUBMITTED FOR 30% ISSUE	SUBMITTED FOR 60% ISSUE	SUBMITTED FOR 90% ISSUE
TECH LEAD	TECH LEAD	TECH LEAD
DATE	DATE	DATE

PRELIMINARY
NOT FOR CONSTRUCTION

T.O. NUMBER	PROJECT NO.	DRAWING INDEX CODE NO.	SHEET NO.	REV. NO.
N/A	40750	94X-3900-E-01660	E0003	A
JEC PROJECT NO. 35H19603	FILENAME 94XE1660.DGN			

DATE: 04/05/02 USER: TCOTTY

4822

ELECTRICAL ABBREVIATIONS/ACRONYMS

ABBREVIATION	UNIT OR TERM
A	AMPERE
AC	ALTERNATING CURRENT
ACB	AIR CIRCUIT BREAKER
AFD	AMP FAULT DETECTOR
AIC	AMPERE INTERRUPTING CAPACITY
AL	ALUMINUM
ALM	ALARM
AMP	AMPERE
AMPL	AMPLIFIER
ANN	ANNUNCIATOR
ANT	ANTENNA
APPROX	APPROXIMATELY
AR	AS REQUIRED
ARCH	ARCHITECT, ARCHITECTURAL
ASDS	ADJUSTABLE SPEED-DRIVE SYSTEM
ASSY	ASSEMBLY
ATS	AUTOMATIC TRANSFER SWITCH
AUTO	AUTOMATIC
AUX	AUXILIARY
AWG	AMERICAN WIRE GAUGE
BAT	BATTERY
BAT CHG	BATTERY CHARGER
BC	BARE COPPER
BLDG	BUILDING
BLK	BLACK
BLU	BLUE
BOT	BOTTOM OF TRAY
BRKR	BREAKER
BTM	BOTTOM
°C	DEGREE CELSIUS
C	CONDUIT
C.O.	CONDUIT ONLY
CAB	CABINET
CB	CIRCUIT BREAKER
CCP	CAMERA CONTROLLER, PROCESS
CCS	CAMERA CONTROLLER, SECURITY
CCTV	CLOSED CIRCUIT TELEVISION
CH	CHANNEL
CHGR	CHARGER
CKT	CIRCUIT
CL	CURRENT LIMITING
CLASS	CLASSIFICATION
CLG	CEILING
CNDCT	CONDUCTOR
CNVR	CONVEYOR
COL	COLUMN
COMM	COMMUNICATION
CR	CONTROL ROOM
CONC	CONCRETE
CONN	CONNECTOR, CONNECTION
CONSTR	CONSTRUCTION
CONTR	CONTROL
CONTD	CONTINUED
CP	CAMERA - PROCESS
CPT	CONTROL POWER TRANSFORMER
CPU	CENTRAL PROCESS UNIT
CS	CAMERA - SECURITY
CSL	CONSOLE
CSU	CHANNEL SERVICE UNIT
CT	CABLE TRAY
C TO C	CENTER TO CENTER
CUB	CUBICLE
DCO	DIAL CENTRAL OFFICE
DC	DIRECT CURRENT
DECON	DECONTAMINATION
DET	DETAIL
DIA	DIAMETER
DIAG	DIAGRAM
DIM	DIMENSION
DISC	DISCONNECT
DISCH	DISCHARGE
DISTR, DIST	DISTRIBUTE, DISTRIBUTION
DN	DOWN
DP	DATA PORT
DPNL	DISTRIBUTION PANEL
DS	DISCONNECT SWITCH
DSU	DATA SERVICE UNIT
DSX	ELECTRICAL CROSS CONNECT
DS1	DIGITAL SIGNAL LEVEL 1
DWG	DRAWING
E	EAST
EA	EACH
EE	EMERGENCY EXIT
EL	ELEVATION (HEIGHT)
ELCP	ENTRY AND LIGHTING CONTROL PANEL
ELEC	ELECTRIC, ELECTRICAL
ELEM	ELEMENTARY
ELEV	ELEVATION (VIEW)
EM	EMERGENCY MESSAGE
EMC	EMERGENCY CONTROL
EMER	EMERGENCY
EMH	ELECTRICAL MANHOLE
ENCL	ENCLOSURE
ENGR	ENGINEER
ENTR	ENTER, ENTRANCE
ETO	EXTENDED TRANSMISSION ONLY
EQ	EQUALIZER
EQPT	EQUIPMENT
ES	EMERGENCY STOP
EST	ESTIMATE
EVAC	EVACUATION
°F	DEGREE FAHRENHEIT
FA	FIRE ALARM
FAC	FACILITY
FAP	FIRE ALARM PANEL
FATB	FIRE ALARM TERMINAL BOX
FAU	FAULT STATUS
FAX	FACSIMILE
FC	FOOTCANDLE
FDR	FEEDER
FDN	FOUNDATION
FEMP	FERNALD ENVIRONMENTAL MANAGEMENT PROJECT
FIL	FILTER
FL	FLOOR
FLA	FULL LOAD AMPS
FLEX	FLEXIBLE
FO	FIBER OPTIC
FSSS	FLAME SAFETY SHUTDOWN SYSTEM
FT	FOOT, FEET
FTB	FIELD TERMINAL BOX
FTG	FITTING
FUT	FUTURE
FV	FULL VOLTAGE
FVNR	FULL VOLTAGE NON-REVERSING
FWD	FORWARD
FXTR	FIXTURE
GALV	GALVANIZE
GEN	GENERATOR
GFCI	GROUND FAULT CURCUIT INTERRUPTER
GND	GROUND

ELECTRICAL ABBREVIATIONS/ACRONYMS

ABBREVIATION	UNIT OR TERM
HAZ	HAZARDOUS
HID	HIGH INTENSITY DISCHARGE
HGT	HEIGHT
HOA	HAND-OFF-AUTOMATIC
HORIZ	HORIZONTAL
HP	HORSEPOWER
HS	HAND SWITCH
HTR	HEATER
HV	HIGH VOLTAGE
HVAC	HEATING, VENTILATING & AIR CONDITIONING
HZ	HERTZ
I	INTERCOM (TELEPHONE)
IC	INTERRUPTING CURRENT
ID	INSIDE DIAMETER, INDUCED DRAFT
IDENT	IDENTIFICATION
IDNX	INTEGRATED DIGITAL NETWORK EXCHANGE
IN	INCH, INCHES
INC	INCOMING
INCAND	INCANDESCENT
IND	INDUCTION
IND LP	INDICATING LAMP
INST	INSTANTANEOUS
INSTL	INSTALLATION
INSTM	INSTRUMENTATION
INSTR	INSTRUMENT
INST RLY	INSTANTANEOUS RELAY
INSUL	INSULATE
INTCON	INTERCONNECTION
INTERCOM	INTERCOMMUNICATION
INTL	INTERNATIONAL
INV	INVERTER
JB	JUNCTION BOX
JCT	JUNCTION
KA	KILOAMPERES
KV	KILOVOLT
KVA	KILOVOLT AMPERES
KVAR	KILOVAR
KW	KILOWATT
KWH	KILOWATT HOUR
LAN	LOCAL AREA NETWORK
LB	POUND
LCL	LOCAL
LO	LOCKOUT
LOS	LOCKOUT STOP
LP	LIGHTING PANEL
LS	LIMIT SWITCH
LSI	LONG TERM, SHORT TERM, INSTANTANEOUS
LSIG	LONG TERM, SHORT TERM, INSTANTANEOUS, GROUND
LSL	LEVEL SWITCH LOW
LSLL	LEVEL SWITCH LOW LOW
LT	LIGHT
LTG	LIGHTING
LV	LOW VOLTAGE
M	MONITOR
MA	MILLIAMPERE
MAINT	MAINTENANCE
MATL	MATERIAL
MAX	MAXIMUM
MC	MANUAL CCTV CONTROLLER
MCC	MOTOR CONTROL CENTER
MCP	MOTOR CIRCUIT PROTECTOR
MDF	MAIN DISTRIBUTION FRAME
MDP	MOTOR DISTRIBUTION PANEL
MECH	MECHANICAL
MEZZ	MEZZANINE
MFR	MANUFACTURER
MG	MOTOR GENERATOR
MIC	MICROPHONE
MIN	MINIMUM
MISC	MISCELLANEOUS
MODEM	MODULATOR DEMODULATOR
MOT	MOTOR
MPZ	MINIPOWER ZONE
MTD	MOUNTED
MTG	MOUNTING
MTO	MATERIAL TAKE OFF
MV	MERCURY VAPOR
MVA	MEGAVOLT AMPERE
N	NORTH
NA	NOT APPLICABLE
NC	NORMALLY CLOSED
NEC	NATIONAL ELECTRICAL CODE
NEG	NEGATIVE
NEMA	NATIONAL ELECTRICAL MANUFACTURING ASSOCIATION
NESC	NATIONAL ELECTRICAL SAFETY CODE
NEUT	NEUTRAL
NIC	NOT IN CONTRACT
NO	NORMALLY OPEN, NUMBER
NTS	NOT TO SCALE
OA	OVERALL
OC	OVERCURRENT
OCB	OIL CIRCUIT BREAKER
OCU	OFFICE CHANNEL UNIT
OD	OUTSIDE DIAMETER
OF	OPTICAL FIBER
OL	OVERLOAD
OVHD	OVERHEAD
P	POLE
PA	PUBLIC ADDRESS, PAGING AUDIO
PAC	PAGING AUDIO CONTROL
PB	PULL BOX, PUSHBUTTON
PB STA	PUSHBUTTON STATION
P/C	POWER/CONTROL
PENET	PENETRATION
PERP	PERPENDICULAR
PF	POWER FACTOR
PFD	PREFERRED
PH	PHASE
P&ID	PIPING & INSTRUMENTATION DIAGRAM
PJCTL	PROJECTILE
PLAR	PRIVATE LINE AUTOMATIC RING DOWN
PLATF	PLATFORM
PLC	PROGRAMMABLE LOGIC CONTROLLER
PLTC	POWER LIMITED TRAY CABLE
PM	PRIORITY MESSAGE
PMC	PM CONTROL
PNL	PANEL
POS	POSITIVE
PR	PAIR
PRI	PRIMARY
PROJ	PROJECT
PSH	PRESSURE SWITCH HIGH
PSL	PRESSURE SWITCH LOW
P/T	PAN/TILT
PTT	PUSH TO TALK
PTZ	PAN TILT ZOOM
PWR	POWER
PWR SPLY	POWER SUPPLY
QA	QUALITY ASSURANCE
QTY	QUANTITY

ELECTRICAL ABBREVIATIONS/ACRONYMS

ABBREVIATION	UNIT OR TERM
R	RED
RC	REMOTE CONTROL
RCPT	RECEPTACLE
RECV	RECEIVER
RECT	RECTIFIER
REF	REFERENCE
REQD	REQUIRED
RES	RESISTANCE, RESISTOR
REV	REVISION
RF	RADIO FREQUENCY
RGS	RIGID GALVANIZED STEEL
RLY	RELAY
RM	ROOM
RPM	REVOLUTIONS PER MINUTE
RTD	RESISTANCE TEMPERATURE DETECTOR
RVNR	REDUCED VOLTAGE NON-REVERSING
RVS	REVERSE
RX	RECEIVE
S	SOUTH
SC	SHORT CIRCUIT, SPEED CONTROL (VFD)
SCA	SUBSCRIBER TELEPHONE CABLE
SCADA	SUPERVISORY CONTROL AND DATA ACQUISITION (SYSTEM)
SCHED	SCHEDULE (TABULATION)
SCHEM	SCHEMATIC
SCR	SILICON CONTROLLED RECTIFIER
SDBC	SOFT DRAWN BARE COPPER
SDH	START DELAY HORN
SDL	START DELAY LIGHT
SEC	SECOND
SECT	SECTION
SEL	SELECT
SH	SHEET
SH/OS	TWISTED PAIR OR TRIAD WITH INDIVIDUAL AND OVERALL SHIELD
SHLD	SHIELD
SIG	SIGNAL
SIM	SIMILAR
SM	SINGLE MODE
SN	SOLID NEUTRAL
SOLV	SOLENOID VALVE
SP	STOP PUSH BUTTON
SPD	SPEED
SPEC	SPECIFICATION
SPKR	SPEAKER
SST	STAINLESS STEEL
ST	START
ST-SP	START-STOP
STA	STATION
STD	STANDARD
STL	STEEL
STR	STRAND
STRD	STRANDED
STRL	STRUCTURAL
SUBSTA	SUBSTATION
SW	SWITCH
SWBD	SWITCHBOARD
SWGR	SWITCHGEAR
SWRK	SWITCHRACK
SYNCH	SYNCHRONIZING
SYS	SYSTEM
T/A	TELEPHONE/ALARM
TA	TONE, AGENT ALARM
TB	TERMINAL BOARD, TERMINAL BOX
TC	TEMPERATURE, COMPENSATING, TRAY CABLE THERMOCOUPLE, TONE CONTROL
TEFC	TOTALLY-ENCLOSED, FAN-COOLED
TEL	TELEPHONE
TEMP	TEMPERATURE, TEMPORARY
TEMP ALM	TEMPERATURE ALARM
TERM	TERMINAL
TF	TONE - FIRE ALARM
THERMO	THERMOSTAT
TJB	TELEPHONE JUNCTION BOX
TM	TACHOMETER
TMH	TELEPHONE MANHOLE
TMS	TACHOMETER SENSOR
TO	TRANSMISSION ONLY
TRC	TRUNK TELEPHONE CABLE
TRP	TRIPPING
TS	TONE - SECURITY
TS/OS	TWISTED PAIR OR TRIAD WITH OVERALL SHIELD ONLY
TS/NS	TWISTED PAIR - NON SHIELDED
TSL	TEMPERATURE SWITCH LOW
TV	TELEVISION
TX	TRANSMIT
TYP	TYPICAL
UG	UNDERGROUND
UHF	ULTRA HIGH FREQUENCY
UL	UNDERWRITERS LABORATORY
UPS	UNINTERRUPTIBLE POWER SUPPLY
V (V)	VOLT, VOLTAGE
VAR	VOLT AMPERE REACTIVE, VARIABLE
VCR	VIDEO CASSETTE RECORDER
VD	VOLTAGE DROP
VFD	VARIABLE FREQUENCY DRIVE
VHF	VERY HIGH FREQUENCY
VM	VOLTMETER
VR	VOLTAGE REGULATOR
W	WATT, WEST, WHITE, WIRE, WIDTH
WH	WATTHOUR
WM	WATTMETER
WP	WEATHERPROOF
WR	WELDING RECEPTACLE
XFMR	TRANSFORMER
XMTR	TRANSMITTER
2W	WIRE, MULTIPLE (NUMBER INDICATED)
2WAY	WAY, MULTIPLE (NUMBER INDICATED)
3/C	CONDUCTOR, MULTIPLE (NUMBER INDICATED)
&	AND
@	AT
℄	CENTERLINE
Ω	OHM
Φ	PHASE
#	NUMBER

INFORMATION ONLY

REF DWG NO.	DRAWING TITLE
E0002	SYMBOLS AND LEGEND

REV. NO.	ISSUE OR REVISION PURPOSE - DESCRIPTION	DATE	REV. BY	APPR.
0	ISSUED FOR CONSTRUCTION	02/20/03	2HS	TE

INITIALS AND DATE

UNITED STATES DEPARTMENT OF ENERGY
FERNALD ENVIRONMENTAL MANAGEMENT PROJECT

THIS DRAWING PREPARED BY

JACOBS

PROJECT NAME

SILOS 1 AND 2

DRAWING TITLE

ELECTRICAL
ELECTRICAL & COMMUNICATION
ABBREVIATIONS, ACRONYMS & NOTES

DRAWN BY	DATE	TECHNICAL LEAD	DATE	CHECKED BY	DATE
[signature]	2/21/03	[signature]	2/20/03	[signature]	2/20/03

PLANT/BLDG. NO.	FLOOR	SCALE	CLASS
00	N/A	NONE	U

SUBMITTED FOR 30% ISSUE — TECH LEAD ____ DATE ____
SUBMITTED FOR 60% ISSUE — TECH LEAD ____ DATE ____
SUBMITTED FOR 90% ISSUE — TECH LEAD ____ DATE ____

T.O. NUMBER	PROJECT NO.	DRAWING INDEX CODE NO.	SHEET NO.	REV. NO.
N/A	40750	94X-3900-E-01661	E0004	0

JEG PROJECT NO. 35H19603 FILENAME 94XE1661.DGN

DATE: 02/20/03

000068

4822

10.0 CONTAINER RAILCAR LOADING AREA HEATING AND VENTILATION SYSTEM
ROOM 115

10.1 AIR HANDLING UNITS, AHU-77-1002, 1003 & 1004 SUPPLY 100% OUTSIDE AIR TO THE CONTAINER RAILCAR LOADING AREA AND ARE SIZED TO PROVIDE ADEQUATE VENTILATION TO MAINTAIN THIS AREA AT A MAXIMUM TEMPERATURE OF 10 DEG F ABOVE AMBIENT TEMPERATURE.

10.2 EXHAUST FANS, FAN-77-1000, 1001, & 1002 EXHAUST AIR FROM THE CONTAINER RAILCAR LOADING AREA TO ATMOSPHERE.

10.3 THE THREE AIR HANDLING UNITS, AHU-77-1002, 1003, & 1004 ARE EACH INTERLOCKED WITH THEIR RESPECTIVE EXHAUST FAN, FAN-77-1000, 1001 & 1002, AND ARE ALL ACTIVATED, OR ALL DE-ACTIVATED, FROM A COMMON START OR STOP COMMAND IN THE MPCS, AND ARE CONTROLLED IN STAGES FROM A COMMON TEMPERATURE SENSOR (TE-AHU-77-1002) LOCATED WITHIN THE CONTAINER RAILCAR LOADING AREA. ON A RISE IN TEMPERATURE ABOVE THE SET POINT (INITIALLY SET @ 70 DEG F; HOWEVER, IT MAY BE RESET BY OPERATIONS, AS NEEDED), AHU-77-1002 AND FAN-77-1002 WILL BE ENERGIZED. ON A CONTINUED RISE IN TEMPERATURE ABOVE 75 DEG F, AHU-77-1004 AND FAN-77-1000 WILL BE ENERGIZED. ON A CONTINUED RISE IN TEMPERATURE ABOVE 80 DEG F, AHU-77-1003 AND FAN-77-1001 WILL BE ENERGIZED. ON A DROP IN TEMPERATURE BELOW 80 DEG F AND BEYOND, THE REVERSE SEQUENCING WILL OCCUR TO DE-ENERGIZE THE PAIRS OF AHUs AND FANS.

10.4 THE INTERLOCKS BETWEEN THE AHUs AND FANS AND THE TEMPERATURE CONTROL LOOP WILL BE OVERRIDDEN WHEN THE REMEDIATION BUILDING CASCADE HVAC SYSTEM IS ON BYPASS CONTROL, SUCH THAT THE AHUs AND FANS WILL ALL BE DE-ENERGIZED.

10.5 THE MOTORIZED INTAKE AIR DAMPER ON EACH AHU-77-1002, 1003, & 1004 IS INTERLOCKED WITH THE AHU FAN MOTOR SUCH THAT WHEN THE FAN MOTOR IS ENERGIZED, THE DAMPER IS OPEN; AND WHEN THE FAN MOTOR IS DE-ENERGIZED, THE DAMPER IS CLOSED.

10.6 UNIT HEATERS ARE PROVIDED TO HEAT THIS AREA, AND ARE SIZED TO MAINTAIN THE AREA AT A MINIMUM OF 40 DEG F ON A DESIGN DAY OF 1 DEG F OUTDOOR TEMPERATURE, WHEN THE PROCESS IS COMPLETELY SHUT DOWN AND WHEN THE LIGHTS ARE OFF. THE UNIT HEATERS, HTR-77-1002 THRU 1013, ARE SUPPLIED WITH INTEGRAL (UNIT-MOUNTED) THERMOSTATS. ON A DROP IN ROOM TEMPERATURE BELOW THE THERMOSTAT SETPOINT (INITIALLY SET AT 40 DEG F; HOWEVER, IT MAY BE RESET BY OPERATIONS, AS NEEDED), THE HEATER WILL BE ENERGIZED. ON A RISE IN TEMPERATURE ABOVE THE SETPOINT, THE HEATER WILL BE DE-ENERGIZED.

10.6.1 TEMPERATURE SENSORS, TE/TIT-77-1014 & TE/TIT-77-1015 ARE LOCATED WITHIN THE ROOF TRUSSES, ONE TOWARD THE EAST END AND ONE TOWARD THE WEST END OF THE BUILDING, AND ARE PROVIDED TO ALERT OPERATIONS TO A POTENTIAL FREEZING CONDITION WITHIN THIS AREA. ON A DROP IN TEMPERATURE BELOW THE SETPOINT (INITIALLY SET @ 35 DEG. F; HOWEVER, IT MAY BE RESET BY OPERATIONS, AS NEEDED), AN ALARM WILL BE POSTED IN THE MPCS.

10.7 FAN-77-1004 PROVIDES DILUTION AIR, BY RUNNING AT ALL TIMES, TO AVOID THE BUILD-UP OF RADON IN THE CONTAINER RAILCAR LOADING AREA. FAN-77-1004 WILL BE ENERGIZED FROM A START COMMAND IN THE MPCS AND LEFT TO RUN CONTINUOUSLY. IT IS ONLY DE-ENERGIZED ON A SIGNAL TO THE MPCS FROM THE FIRE ALARM SYSTEM AS A RESULT OF DETECTION WITHIN THE CONTAINER RAILCAR LOADING AREA, OR WHEN THE REMEDIATION FACILITY CASCADE HVAC SYSTEM IS IN BYPASS MODE.

10.8 UPSET CONDITIONS

10.8.1 POWER FAILURE - LOSS OF COMMERCIAL POWER

FAN-77-1004 IS CONNECTED TO THE STAND-BY POWER SYSTEM.

POWER FOR THE HVAC CONTROLS IS CONNECTED TO THE UPS SYSTEM.

10.8.2 FIRE/SMOKE DETECTION

WHEN ANY OF THE SMOKE DETECTORS, XE-AHU-77-1002, 1003, & 1004, LOCATED IN EACH OF THE AHU DISCHARGE PLENUMS, DETECTS SMOKE, ALL OF THE AHUs, AHU-77-1002, 1003, & 1004, AND SUBSEQUENTLY THEIR RESPECTIVE INTERLOCKED FANS, FAN-77-1000, 1001, & 1002, ARE DE-ENERGIZED AND AN ALARM IS POSTED THROUGH THE MPCS. THE OPERATOR CAN MANUALLY OVERRIDE THE INTERLOCK BETWEEN THE FANS, FAN-77-1000 THRU 1002 AND THE AHUs, AHU-77-1002 THRU 1004 FOR THE PURPOSE OF SMOKE REMOVAL, AS REQUIRED.

AHU-77-1002, 1003, & 1004, AND SUBSEQUENTLY FAN-77-1000, 1001, & 1002, ARE DE-ENERGIZED ON A SIGNAL TO THE MPCS FROM THE FIRE ALARM SYSTEM AS A RESULT OF AREA SMOKE DETECTION OR MANUAL PULLBOX ACTIVATION WITHIN THE CONTAINER RAILCAR LOADING AREA.

11.0 EMPTY CONTAINER STAGING ROOM HVAC SYSTEM
ROOM 114

11.1 AIR CONDITIONING UNITS, ACU-77-1001 & 1002, PROVIDE A MIXTURE OF RECIRCULATED AND OUTSIDE AIR TO MAINTAIN A SLIGHTLY POSITIVE PRESSURE WITHIN THIS ROOM IN RELATION TO THE ADJACENT REMEDIATION FACILITY AND THE OUTDOORS. THESE UNITS ARE SIZED TO MAINTAIN THE EMPTY CONTAINER STAGING ROOM AT A MAXIMUM TEMPERATURE OF 80 DEG F FOR COOLING AND 68 DEG F FOR HEATING, WHEN OPERATING TOGETHER.

11.2 ENERGIZE THE TWO ACUs FROM THEIR HAND SWITCHES IN THE MPCS AND PLACE THEM IN 'AUTO' MODE TO ALLOW FOR THE TWO ACUs TO INITIATE THEIR INTERNAL CONTROLS FOR START-UP SEQUENCING AND CONTROL. THE INDIVIDUAL ACUs ARE CONTROLLED FROM THEIR INDIVIDUAL ROOM-MOUNTED THERMOSTATS (TIC-ACU-77-1001 & 1002) TO MAINTAIN CONDITIONS WITHIN THE ROOM (INITIAL ROOM THERMOSTAT SETPOINT SHALL BE 80 DEG F FOR COOLING AND 68 DEG F FOR HEATING).

11.3 IF AN ACU IS SHUT DOWN BY ITS INTERNAL CONTROLS, AN ALARM (XA-ACU-77-1001 OR 1002) WILL BE POSTED IN THE MPCS TO PROMPT ACTION.

11.4 UPSET CONDITIONS

11.4.1 POWER FAILURE - LOSS OF COMMERCIAL POWER

ACU-77-1001 IS CONNECTED TO THE STAND-BY POWER SYSTEM, AND THE HVAC CONTROLS ARE CONNECTED TO THE UPS SYSTEM.

11.4.2 FIRE/SMOKE DETECTION

IF AN ACU SMOKE DETECTOR (XE-ACU-77-1001 OR 1002) DETECTS SMOKE, THE ACU WILL BE SHUT DOWN BY ITS INTERNAL CONTROLS, AND AN ALARM WILL BE POSTED IN THE MPCS.

ACU-77-1001 & 1002 ARE DE-ENERGIZED ON A SIGNAL TO THE MPCS FROM THE FIRE ALARM SYSTEM AS A RESULT OF AREA SMOKE DETECTION OR MANUAL PULLBOX ACTIVATION WITHIN THE EMPTY CONTAINER STAGING ROOM.

12.0 CONTROL ROOM AREA HVAC SYSTEM
ROOMS 130, 131, 132, 142, 145, 146 & 150

12.1 AIR CONDITIONING UNIT, ACU-77-1000 PROVIDES A MIXTURE OF RECIRCULATED AND OUTSIDE AIR TO MAINTAIN A SLIGHT POSITIVE PRESSURE WITHIN THE CONTROL ROOM IN RELATION TO THE ADJACENT REMEDIATION FACILITY AND THE OUTDOORS. THIS UNIT IS SIZED TO MAINTAIN THE CONTROL ROOM AT A MAXIMUM TEMPERATURE OF 74 DEG F FOR COOLING AND 68 DEG F FOR HEATING.

12.2 ENERGIZE THE ACU FROM ITS HANDSWITCH IN THE MPCS AND PLACE IT IN 'AUTO' MODE TO ALLOW FOR THE ACU TO INITIATE ITS INTERNAL CONTROLS FOR START-UP SEQUENCING AND CONTROL. THE INDIVIDUAL ACU IS CONTROLLED FROM ITS INDIVIDUAL ROOM-MOUNTED THERMOSTAT (TIC-ACU-77-1000) TO MAINTAIN CONDITIONS WITHIN THE CONTROL ROOM (INITIAL ROOM THERMOSTAT SETPOINT SHALL BE 78 DEG F FOR COOLING AND 68 DEG F FOR HEATING).

12.3 IF THE ACU IS SHUT DOWN BY ITS INTERNAL CONTROLS, AN ALARM (XA-ACU-77-1000) WILL BE POSTED IN THE MPCS TO PROMPT ACTION.

12.4 ROOM DIFFERENTIAL PRESSURE IS MAINTAINED WITHIN THE CONTROL ROOM BY MODULATING THE RETURN AIR DAMPER, DPR-77-4039. PDIT-DPR-77-4039 MONITORS THE DIFFERENTIAL PRESSURE WITHIN THE ROOM. ON A DROP IN ROOM DIFFERENTIAL PRESSURE BELOW THE SETPOINT (INITIALLY SET AT 0.10" WC), DPR-77-4039 IS MODULATED TOWARD ITS CLOSED POSITION. ON A RISE IN ROOM DIFFERENTIAL PRESSURE ABOVE THE SETPOINT, DPR-77-4039 MODULATES TOWARD ITS OPEN POSITION.

12.5 UPSET CONDITIONS

12.5.1 POWER FAILURE - LOSS OF COMMERCIAL POWER

ACU-77-1000 IS CONNECTED TO THE STAND-BY POWER SYSTEM, AND THE HVAC CONTROLS ARE CONNECTED TO THE UPS SYSTEM.

ALL MOTORIZED DAMPERS AND PNEUMATIC DAMPER ACTUATOR TRANSDUCERS ARE CONNECTED TO THE UPS.

ALL MOTORIZED FIRE DAMPERS (FDPs) ARE CONNECTED TO THE UPS AND ARE POWERED TO OPEN AND FAIL CLOSED.

ALL MOTORIZED DAMPERS FAIL IN THE POSITIONS AS INDICATED ON THE CONTROL DIAGRAMS:

FO - FAIL OPEN
FC - FAIL CLOSED
FL - FAIL LAST POSITION

12.5.2 FIRE/SMOKE DETECTION

IF THE ACU SMOKE DETECTOR (XE-ACU-77-1000) DETECTS SMOKE, THE ACU WILL BE SHUT DOWN BY ITS INTERNAL CONTROLS, AND AN ALARM WILL BE POSTED IN THE MPCS.

ACU-77-1000 IS DE-ENERGIZED ON A SIGNAL TO THE MPCS FROM THE FIRE ALARM SYSTEM AS A RESULT OF AREA SMOKE DETECTION OR MANUAL PULLBOX ACTIVATION WITHIN THE CONTROL ROOM 146 OR THE READY ROOM 145.

ON A SIGNAL TO THE MPCS FROM THE FIRE ALARM SYSTEM AS A RESULT OF AREA SMOKE DETECTION OR MANUAL PULLBOX ACTIVATION WITHIN THE MAIN ENTRY ROOM 132, CLOSE DAMPERS FDP-77-4080 & 4081.

ON A SIGNAL TO THE MPCS FROM THE FIRE ALARM SYSTEM AS A RESULT OF AREA SMOKE DETECTION WITHIN EITHER THE MENs OR WOMENs DONNING ROOM 130 OR 131, CLOSE DAMPERS FDP-77-4082 & 4083.

13.0 ELECTRICAL ROOM HEATING AND VENTILATION SYSTEM
ROOM 121

13.1 AIR HANDLING UNIT, AHU-77-1000 SUPPLIES 100% OUTSIDE AIR TO THE ELECTRICAL ROOM AND IS SIZED TO PROVIDE ADEQUATE VENTILATION TO MAINTAIN THIS AREA AT A MAXIMUM TEMPERATURE OF 10 DEG F ABOVE AMBIENT TEMPERATURE.

13.2 ENERGIZE THE AHU FROM ITS HANDSWITCH IN THE MPCS AND PLACE IT IN 'AUTO' MODE TO ALLOW FOR THE AHU TO BE CONTROLLED FROM ITS ROOM-MOUNTED TEMPERATURE SENSOR (TE-AHU-77-1000). THE INITIAL THERMOSTAT SETPOINT SHALL BE 78 DEG F. ON A RISE IN ROOM TEMPERATURE ABOVE 78 DEG F, THE FAN MOTOR IS ENERGIZED. ON A DROP IN ROOM TEMPERATURE BELOW 78 DEG F, THE FAN MOTOR IS DE-ENERGIZED. ON A DROP IN ROOM TEMPERATURE BELOW 40 DEG F, AN ALARM SHALL BE INDICATED IN THE MPCS.

13.3 THE MOTORIZED INTAKE AIR DAMPER ON AHU-77-1000 IS INTERLOCKED WITH THE AHU FAN MOTOR SUCH THAT WHEN THE FAN MOTOR IS ENERGIZED, THE DAMPER IS OPEN; AND WHEN THE FAN MOTOR IS DE-ENERGIZED, THE DAMPER IS CLOSED.

13.4 A UNIT HEATER IS PROVIDED TO HEAT THIS AREA, AND IS SIZED TO MAINTAIN THE AREA AT A MINIMUM OF 55 DEG F ON A DESIGN DAY OF 1 DEG F OUTDOOR TEMPERATURE. THE UNIT HEATER, HTR-77-1000 IS SUPPLIED WITH AN INTEGRAL (UNIT-MOUNTED) THERMOSTAT. ON A DROP IN ROOM TEMPERATURE BELOW THE THERMOSTAT SETPOINT (INITIALLY SET AT 55 DEG F; HOWEVER, IT MAY BE RESET BY OPERATIONS, AS NEEDED), THE HEATER WILL BE ENERGIZED. ON A RISE IN TEMPERATURE ABOVE THE SETPOINT, THE HEATER WILL BE DE-ENERGIZED.

13.5 FAN-77-1005 IS PROVIDED TO DRAW OUTSIDE AIR THROUGH AN INTAKE LOUVER/DAMPER/FILTER INTO THE BATTERY ENCLOSURE AND EXHAUST IT TO ATMOSPHERE. THE BATTERY ROOM VENTILATION SYSTEM PROVIDES FOR MAINTAINING THE ROOM TO A MAXIMUM TEMPERATURE OF WITHIN 10 DEG F OF AMBIENT TEMPERATURE. THERE ARE NO PROVISIONS FOR HEAT OR FOR MECHANICAL REFRIGERATION COOLING TO MAINTAIN TEMPERATURES WITHIN ANY TIGHTER TOLERANCES THAN ACHIEVABLE BY VENTILATION WITH OUTSIDE AIR AS DESCRIBED ABOVE. TEMPERATURE SWITCH, TSH-77-1005, LOCATED WITHIN THE BATTERY CHARGING ROOM, IS PROVIDED TO ENERGIZE THE FAN WHEN THE ROOM TEMPERATURE RISES ABOVE THE SETPOINT (INITIALLY SET AT 50 DEG F; HOWEVER, IT MAY BE RESET BY OPERATIONS, AS NEEDED). THE FAN IS DE-ENERGIZED WHEN THE TEMPERATURE FALLS BELOW THE SETPOINT

13.6 UPSET CONDITIONS

13.6.1 POWER FAILURE - LOSS OF COMMERCIAL POWER

THE UNIT HEATER, HTR-77-1000 AND EXHAUST FAN, FAN-77-1005, ARE CONNECTED TO THE STAND-BY POWER SYSTEM.

13.6.2 FIRE/SMOKE DETECTION

WHEN THE SMOKE DETECTOR, XE-AHU-77-1000, LOCATED IN THE AHU DISCHARGE PLENUM, DETECTS SMOKE, AHU-77-1000 IS DE-ENERGIZED AND AN ALARM IS POSTED IN THE MPCS.

AHU-77-1000 AND FAN-77-1005 ARE DE-ENERGIZED ON A SIGNAL TO THE MPCS FROM THE FIRE ALARM SYSTEM AS A RESULT OF AREA SMOKE DETECTION OR MANUAL PULLBOX ACTIVATION WITHIN THE ELECTRICAL ROOM.

14.0 COLD CHEMICAL MAKE-UP ROOM HEATING AND VENTILATION SYSTEM
ROOM 124

14.1 AIR HANDLING UNIT, AHU-77-1001 SUPPLIES 100% OUTSIDE AIR TO THE COLD CHEMICAL MAKE-UP ROOM AND IS SIZED TO PROVIDE ADEQUATE VENTILATION TO MAINTAIN THIS ROOM AT A MAXIMUM TEMPERATURE OF 10 DEG F ABOVE AMBIENT TEMPERATURE.

14.2 ENERGIZE THE AHU FROM ITS HANDSWITCH IN THE MPCS AND PLACE IT IN 'AUTO' MODE TO ALLOW FOR THE AHU TO BE CONTROLLED FROM ITS ROOM-MOUNTED TEMPERATURE SENSOR (TE-AHU-77-1001). THE INITIAL THERMOSTAT SETPOINT SHALL BE 80 DEG F. ON A RISE IN ROOM TEMPERATURE ABOVE 80 DEG F, THE FAN MOTOR IS ENERGIZED. ON A DROP IN ROOM TEMPERATURE BELOW 80 DEG F, THE FAN MOTOR IS DE-ENERGIZED. ON A DROP IN ROOM TEMPERATURE BELOW 40 DEG F, AN ALARM SHALL BE INDICATED IN THE MPCS.

14.3 FOR WINTER TIME OCCUPATION, ADMINISTRATIVE CONTROLS WILL BE NECESSARY TO START AND RUN AHU-77-1001 FOR A PERIOD OF 5 MINUTES TO PURGE THE ROOM PRIOR TO ENTRY AND OCCUPATION BY PERSONNEL. THIS PURGE TIME PERIOD IS A GUIDELINE ONLY AND SHALL BE ADJUSTED ACCORDINGLY BY OPERATIONS TO SUIT ON-SITE REGULATIONS, LOCAL CODES, OSHA GUIDELINES PERTAINING TO STORED CHEMICALS, ETC.

14.4 THE MOTORIZED INTAKE AIR DAMPER ON AHU-77-1001 IS INTERLOCKED WITH THE AHU FAN MOTOR SUCH THAT WHEN THE FAN MOTOR IS ENERGIZED, THE DAMPER IS OPEN; AND WHEN THE FAN MOTOR IS DE-ENERGIZED, THE DAMPER IS CLOSED.

14.5 A UNIT HEATER IS PROVIDED TO HEAT THIS AREA, AND IS SIZED TO MAINTAIN THE AREA AT A MINIMUM OF 55 DEG F ON A DESIGN DAY OF 1 DEG F OUTDOOR TEMPERATURE. THE UNIT HEATER, HTR-77-1001 IS SUPPLIED WITH AN INTEGRAL (UNIT-MOUNTED) THERMOSTAT. ON A DROP IN ROOM TEMPERATURE BELOW THE THERMOSTAT SETPOINT (INITIALLY SET AT 55 DEG F; HOWEVER, IT MAY BE RESET BY OPERATIONS, AS NEEDED). THE HEATER WILL BE ENERGIZED. ON A RISE IN TEMPERATURE ABOVE THE SETPOINT, THE HEATER WILL BE DE-ENERGIZED.

14.6 UPSET CONDITIONS

14.6.1 POWER FAILURE - LOSS OF COMMERCIAL POWER

THE UNIT HEATER, HTR-77-1001 IS CONNECTED TO THE STAND-BY POWER SYSTEM.

14.6.2 FIRE/SMOKE DETECTION

WHEN THE SMOKE DETECTOR, XE-AHU-77-1001, LOCATED IN THE AHU DISCHARGE PLENUM, DETECTS SMOKE, AHU-77-1001 IS DE-ENERGIZED AND AN ALARM IS POSTED IN THE MPCS.

AHU-77-1001 IS DE-ENERGIZED ON A SIGNAL TO THE MPCS FROM THE FIRE ALARM SYSTEM AS A RESULT OF AREA SMOKE DETECTION OR MANUAL PULLBOX ACTIVATION WITHIN THE COLD CHEMICAL MAKE-UP ROOM.

15.0 SOUTH STAIRWELL HEATING AND VENTILATION SYSTEM
ROOM 122

15.1 FAN-77-1006 RUNS CONTINUOUSLY TO SUPPLY 100% OUTSIDE AIR TO POSITIVELY PRESSURIZE THE STAIRWELL.

15.2 UNIT HEATERS, HTR-77-1022 & 1023, ARE PROVIDED TO HEAT THIS AREA, AND ARE SIZED TO MAINTAIN THE AREA AT A MINIMUM OF 45 DEG F ON A DESIGN DAY OF 1 DEG F OUTDOOR TEMPERATURE. THE UNIT HEATERS ARE SUPPLIED WITH INTEGRAL (UNIT-MOUNTED) THERMOSTATS. ON A DROP IN ROOM TEMPERATURE BELOW THE THERMOSTAT SETPOINT (INITIALLY SET AT 55 DEG F; HOWEVER, IT MAY BE RESET BY OPERATIONS, AS NEEDED), THE HEATER WILL BE ENERGIZED. ON A RISE IN TEMPERATURE ABOVE THE SETPOINT, THE HEATER WILL BE DE-ENERGIZED.

15.3 UPSET CONDITIONS

15.3.1 POWER FAILURE - LOSS OF COMMERCIAL POWER

THE FAN, FAN-77-1006, AND UNIT HEATERS, HTR-77-1022 & 1023 ARE CONNECTED TO THE STAND-BY POWER SYSTEM.

16.0 CONTINUOUS EMISSIONS MONITORING (CEM) BUILDING A/C SYSTEM

16.1 THE CEM BUILDING SUPPLIER WILL INCLUDE AN AIR CONDITIONING UNIT TO MAINTAIN CONDITIONS WITHIN THE CEM BUILDING TO A MAXIMUM TEMPERATURE OF 74 DEG F AND A MINIMUM TEMPERATURE OF 68 DEG F. THE A/C UNIT WILL INCLUDE LOCAL CONTROLS.

NOTES:

1. FOR EQUIPMENT SIZES AND INFORMATION SEE EQUIPMENT SCHEDULES SHEET H0074 AND H0075.

INFORMATION ONLY

REF DWG NO.	DRAWING TITLE
H0010	HVAC, GENERAL NOTES, SYSTEMS AND EQUIPMENT DESIGNATORS
H0011	HVAC, LEGEND, SYMBOLS & ABBREVIATIONS
H0020	HVAC, CONTROLS SEQUENCE OF OPERATION

Date 03-0.3-03

REV NO.	ISSUE OR REVISION PURPOSE - DESCRIPTION	DATE	REV. BY	APPR.
0	ISSUED FOR CONSTRUCTION	02/10/02		

UNITED STATES DEPARTMENT OF ENERGY
FERNALD ENVIRONMENTAL MANAGEMENT PROJECT

THIS DRAWING PREPARED BY JACOBS
125 Broadway Ave., Oak Ridge, Tennessee 37830, Tel: 865-220-4800, Fax: 865-220-4170

PROJECT NAME: SILOS 1 AND 2

DRAWING TITLE: HVAC REMEDIATION FACILITY CONTROLS SEQUENCE OF OPERATION

DRAWN BY	DATE	TECHNICAL LEAD	DATE	CHECKED BY	DATE
	02/10/03		2/10/03		2/10/03

PLANT/BLDG. NO.	FLOOR	SCALE	CLASS
948	N/A	NONE	U

T.O. NUMBER	PROJECT NO.	JEG PROJECT NO.	FILENAME	DRAWING INDEX CODE NO.	SHEET NO.	REV. NO.
N/A	40750	35H19603	94xh1693.DGN	94X-3900-H-01693	H0021	0

000069

DATE: 02/08/03 USER: BSlobbek

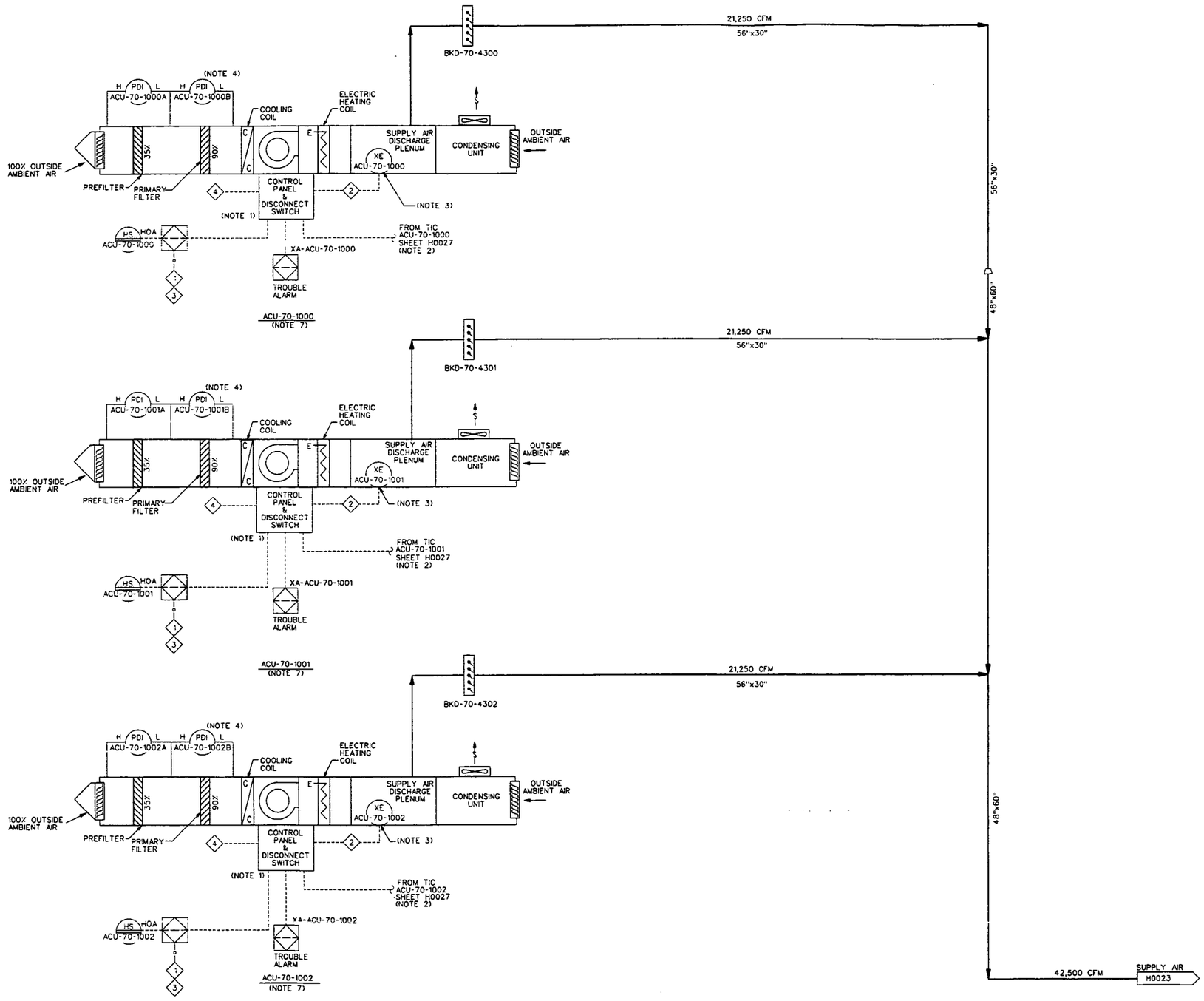

ACU-70-1000
AIR CONDITIONING UNIT
21,250 CFM
2 @ 15 HP FAN MOTORS
3" WC EXT. SP.
190KW HEAT

ACU-70-1001
AIR CONDITIONING UNIT
21,250 CFM
2 @ 15 HP FAN MOTORS
3" WC EXT. SP.
190KW HEAT

ACU-70-1002
AIR CONDITIONING UNIT
21,250 CFM
2 @ 15 HP FAN MOTORS
3" WC EXT. SP.
190KW HEAT

NOTES:

1. CONTROL PANEL/DISCONNECT SWITCH FURNISHED WITH ACU, MOUNTED AND WIRED. SINGLE SOURCE POWER SUPPLY REQUIRED. (REFERENCE EQUIPMENT SPECIFICATION ES-JM-ACU-70-1000.)
2. ROOM TEMPERATURE SENSORS FURNISHED WITH ACU, LOCATED IN SECOND FLOOR ACCESS CORRIDOR ROOM 204. (REFERENCE EQUIPMENT SPECIFICATION ES-JM-ACU-70-1000.)
3. SMOKE DETECTOR FURNISHED, MOUNTED, & WIRED BY FIRE ALARM SYSTEM VENDOR.
4. PDI'S ARE FURNISHED, MOUNTED WITH ACU'S. (REFERENCE EQUIPMENT SPECIFICATION ES-JM-ACU-70-1000.)
5. FOR HVAC CONTROLS SEQUENCE OF OPERATION SEE SHEETS H0020 AND H0021.
6. FOR INSTRUMENTATION SYMBOLS AND LEGEND SEE SHEETS N0001 AND N0002.
7. ANY TWO ACU'S WILL BE OPERATING AND ONE STANDING-BY AT ANY GIVEN TIME.
8. FOR EQUIPMENT SIZES AND INFORMATION SEE EQUIPMENT SCHEDULES SHEET H0074 AND H0075.

INTERLOCKS:

1. TWO ACU'S WILL BE SELECTED AS PRIMARY AND STARTED BY THE OPERATOR. THE REMAINING ACU WILL BE STAND-BY.

   ON LOW FLOW INDICATION FROM FI-ACU-70-4700, ENERGIZE STAND-BY ACU AND DE-ENERGIZE WHICHEVER PRIMARY ACU IS DETERMINED TO BE PERFORMING INADEQUATELY.

   ON ACU SHUTDOWN ALARM, XA, ENERGIZE STAND-BY ACU.
2. ACU WILL SHUT DOWN ON SMOKE DETECTION. ALARM WILL BE POSTED IN CONTROL ROOM. STAND-BY ACU WILL BE STARTED.
3. SHUT DOWN ACU ON SIGNAL TO PROCESS CONTROL SYSTEM FROM FIRE ALARM SYSTEM.
4. HARD-WIRED INTERLOCK TO DHT-70-1000 & 1001

INFORMATION ONLY

REF DWG NO.	DRAWING TITLE
H0010	HVAC, GENERAL NOTES, SYSTEMS AND EQUIPMENT DESIGNATORS
H0011	HVAC, LEGEND, SYMBOLS & ABBREVIATIONS

Work Conforms to the Subcontract Requirements (18-Mo Contract) Instrument and Functional Check Complete 03-03-03

REV. NO	ISSUE OR REVISION PURPOSE - DESCRIPTION	DATE	REV. BY	APPR.
0	ISSUED TO CONSTRUCTION	02/10/03		

INITIALS AND DATE

UNITED STATES DEPARTMENT OF ENERGY
FERNALD ENVIRONMENTAL MANAGEMENT PROJECT

THIS DRAWING PREPARED BY
JACOBS
125 Broadway Ave. Oak Ridge, Tennessee 37830
Tel: 865-220-4800
Fax: 865-220-6110

PROJECT NAME
SILOS 1 AND 2

DRAWING TITLE
HVAC
REMEDIATION FACILITY
CONTROL DIAGRAM

DRAWN BY	DATE	TECHNICAL LEAD	DATE	CHECKED BY	DATE
	02/06/03		2/10/03		2/10/03

PLANT/BLDG. NO.	FLOOR	SCALE	CLASS
948	N/A	NONE	U

SUBMITTED FOR 30% ISSUE	SUBMITTED FOR 60% ISSUE	SUBMITTED FOR 90% ISSUE
TECH LEAD	TECH LEAD	TECH LEAD
DATE	DATE	DATE

T.O. NUMBER	PROJECT NO.	DRAWING INDEX CODE NO.	SHEET NO.	REV. NO.
N/A	40750	94X-3900-H-01694	H0022	0

JE PROJECT NO.	FILENAME
35H19603	94xh1694.DGN

DATE: 02/06/03
TIME: 05:46:22 PM
USER: BSlobbek
DESIGN FILE: h:\hvac\drawings\control diagrams\94xh1694.dgn

4822

000070

4822

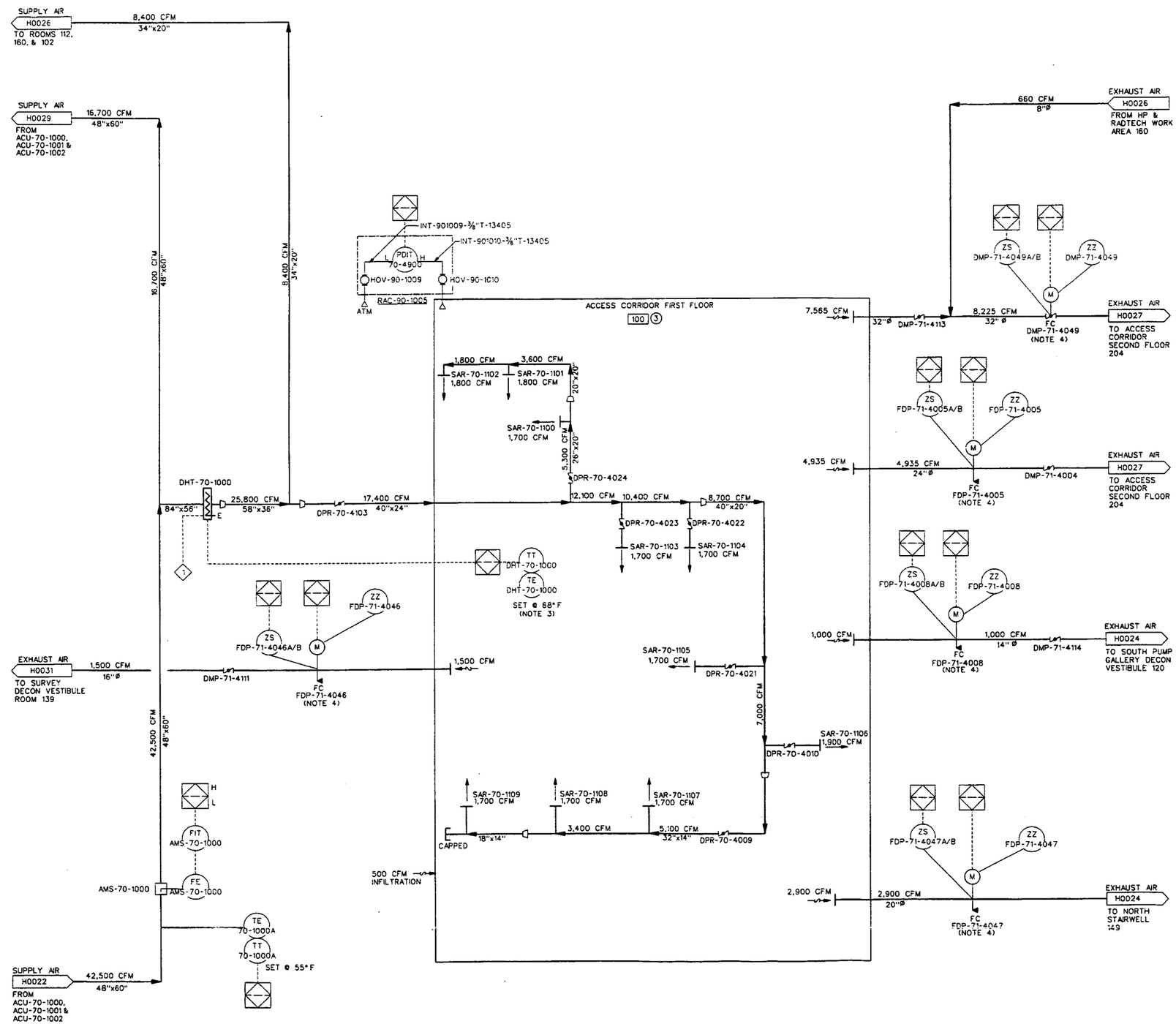

NOTES:

1. FOR HVAC CONTROLS SEQUENCE OF OPERATION SEE SHEETS H0020 AND H0021.
2. FOR INSTRUMENTATION SYMBOLS AND LEGEND SEE SHEETS N0001 AND N0002.
3. TE, TT FURNISHED WITH DUCT HEATER. (REFERENCE CONSTRUCTION SPECIFICATION SECTION 15895)
4. FDP-71-4005, -4008, -4046,-4047, & DMP-71-4049 ARE PROVIDED TO ALLOW FOR REMOTE OPERATED ISOLATION BETWEEN VENTILATION ZONES 3 AND 28. IN ADDITION, FDP-71-4005, -4008, -4046, & -4047 ALSO ALLOW FOR AUTOMATIC CLOSURE IN THE EVENT OF A SIGNAL FROM THE FIRE ALARM SYSTEM.
5. FOR EQUIPMENT SIZES AND INFORMATION SEE EQUIPMENT SCHEDULES SHEET H0074 AND H0075.

INTERLOCKS:

1 HARD-WIRED INTERLOCK FROM ACU-70-1000,1001 & 1002

REF DWG NO.	DRAWING TITLE
H0010	HVAC, GENERAL NOTES, SYSTEMS AND EQUIPMENT DESIGNATORS
H0011	HVAC, LEGEND, SYMBOLS & ABBREVIATIONS

Not Conforms to the Subcontract Requirements
Conforms to the Subcontract Requirements
Date: 03-03-03

REV. NO.	ISSUE OR REVISION PURPOSE - DESCRIPTION	DATE	REV. BY	APPR.
0	ISSUED TO CONSTRUCTION	02/10/03		

INITIALS AND DATE

UNITED STATES DEPARTMENT OF ENERGY
FERNALD ENVIRONMENTAL MANAGEMENT PROJECT

THIS DRAWING PREPARED BY
JE JACOBS
175 Broadway Ave.
Oak Ridge, Tennessee 37830
Tel: 865-220-4600
Fax: 865-220-4170

PROJECT NAME
SILOS 1 AND 2

DRAWING TITLE
HVAC
REMEDIATION FACILITY
CONTROL DIAGRAM

DRAWN BY	DATE	TECHNICAL LEAD	DATE	CHECKED BY	DATE
	02/14/03		2/10/03		2/16/03

PLANT/BLDG. NO.	FLOOR	SCALE	CLASS
948	N/A	NONE	U

SUBMITTED FOR 30% ISSUE	SUBMITTED FOR 60% ISSUE	SUBMITTED FOR 90% ISSUE
TECH LEAD	TECH LEAD	TECH LEAD
DATE	DATE	DATE

T.O. NUMBER	PROJECT NO.	DRAWING INDEX CODE NO.	SHEET NO.	REV. NO.
N/A	40750	94X-3900-H-01695	H0023	0
JEC PROJECT NO. 35H19603	FILENAME 94ch1695.DGN			

000071

DATE: 02/08/03 USER: BSKIDMOR

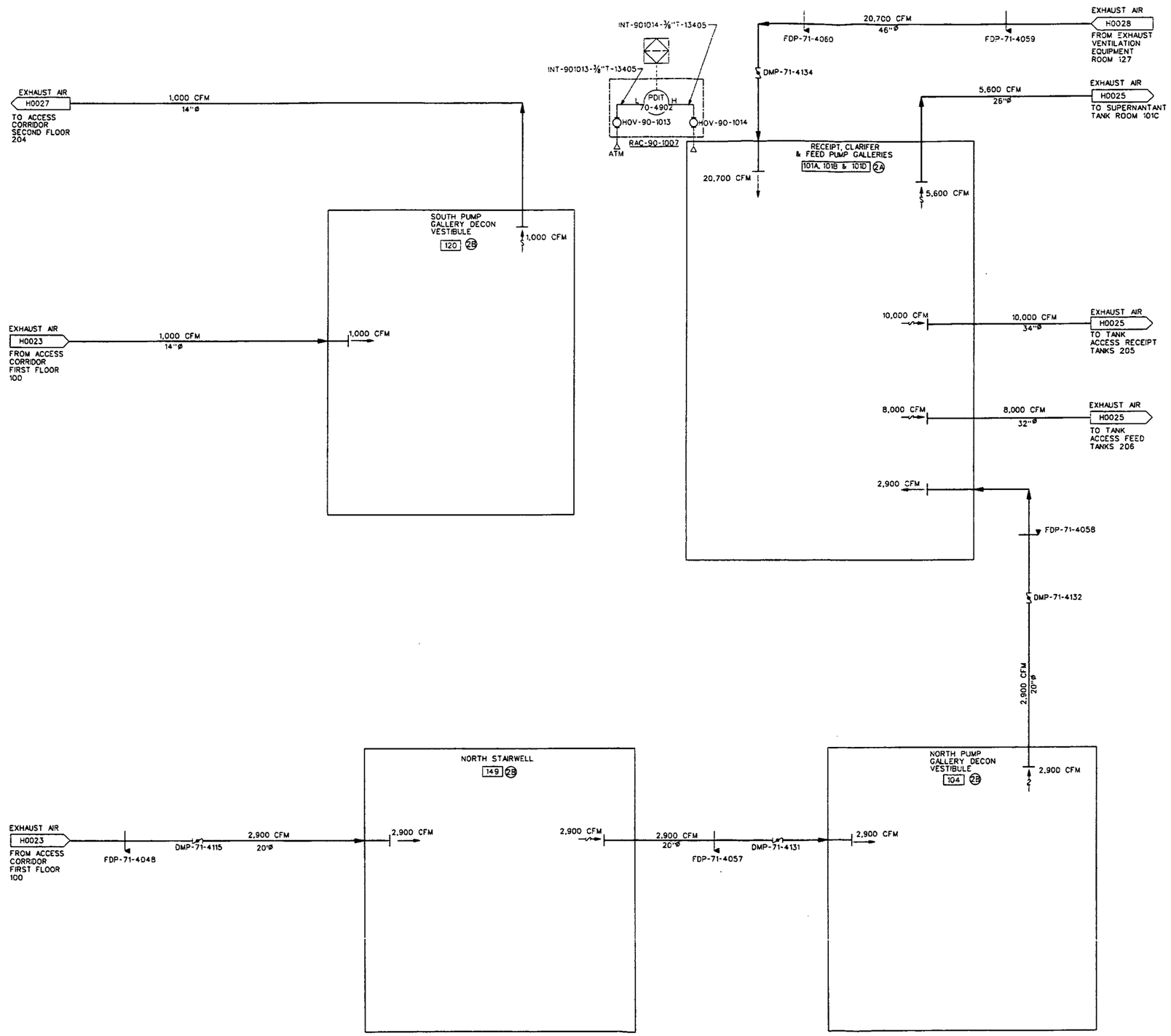

NOTES:

1. FOR HVAC CONTROLS SEQUENCE OF OPERATION SEE SHEETS H0020 AND H0021.
2. FOR INSTRUMENTATION SYMBOLS AND LEGEND SEE SHEETS N0001 AND N0002.

INFORMATION ONLY

REF DWG NO.	DRAWING TITLE
H0010	HVAC, GENERAL NOTES, SYSTEMS AND EQUIPMENT DESIGNATORS
H0011	HVAC, LEGEND, SYMBOLS & ABBREVIATIONS

I & A Contrary to the Submittal Requirements (1) Not in Compliance with Specifications and Standards (2) Not Approved Date 02-03-03

REV. NO.	ISSUE OR REVISION PURPOSE - DESCRIPTION	DATE	REV. BY	APPR.
0	ISSUED TO CONSTRUCTION	02/10/03		

INITIALS AND DATE

UNITED STATES DEPARTMENT OF ENERGY
FERNALD ENVIRONMENTAL MANAGEMENT PROJECT

THIS DRAWING PREPARED BY
JE JACOBS 125 Broadway Ave. Oak Ridge, Tennessee 37830 Tel: 865-220-4600 Fax: 865-220-6170

PROJECT NAME
SILOS 1 AND 2

DRAWING TITLE
HVAC
REMEDIATION FACILITY
CONTROL DIAGRAM

DRAWN BY	DATE	TECHNICAL LEAD	DATE	CHECKED BY	DATE
	02/10/03		2/10/03		2/10/03

PLANT/BLDG. NO.	FLOOR	SCALE	CLASS
94B	N/A	NONE	U

SUBMITTED FOR 30% ISSUE	SUBMITTED FOR 60% ISSUE	SUBMITTED FOR 90% ISSUE
TECH LEAD	TECH LEAD	TECH LEAD
DATE	DATE	DATE

T.A. NUMBER	PROJECT NO.	DRAWING INDEX CODE NO.	SHEET NO.	REV. NO.
N/A	40750	94X-3900-H-01696	H0024	0
JES PROJECT NO. 35H19603	FILENAME 94xh1696.DGN			

DATE: 02/03/03
TIME: 05:42:24 PM
USER: BSkaggs
DESIGN FILE: h:\hvac\drawings\controldiagrams\94xh1696.dgn

4822

000072

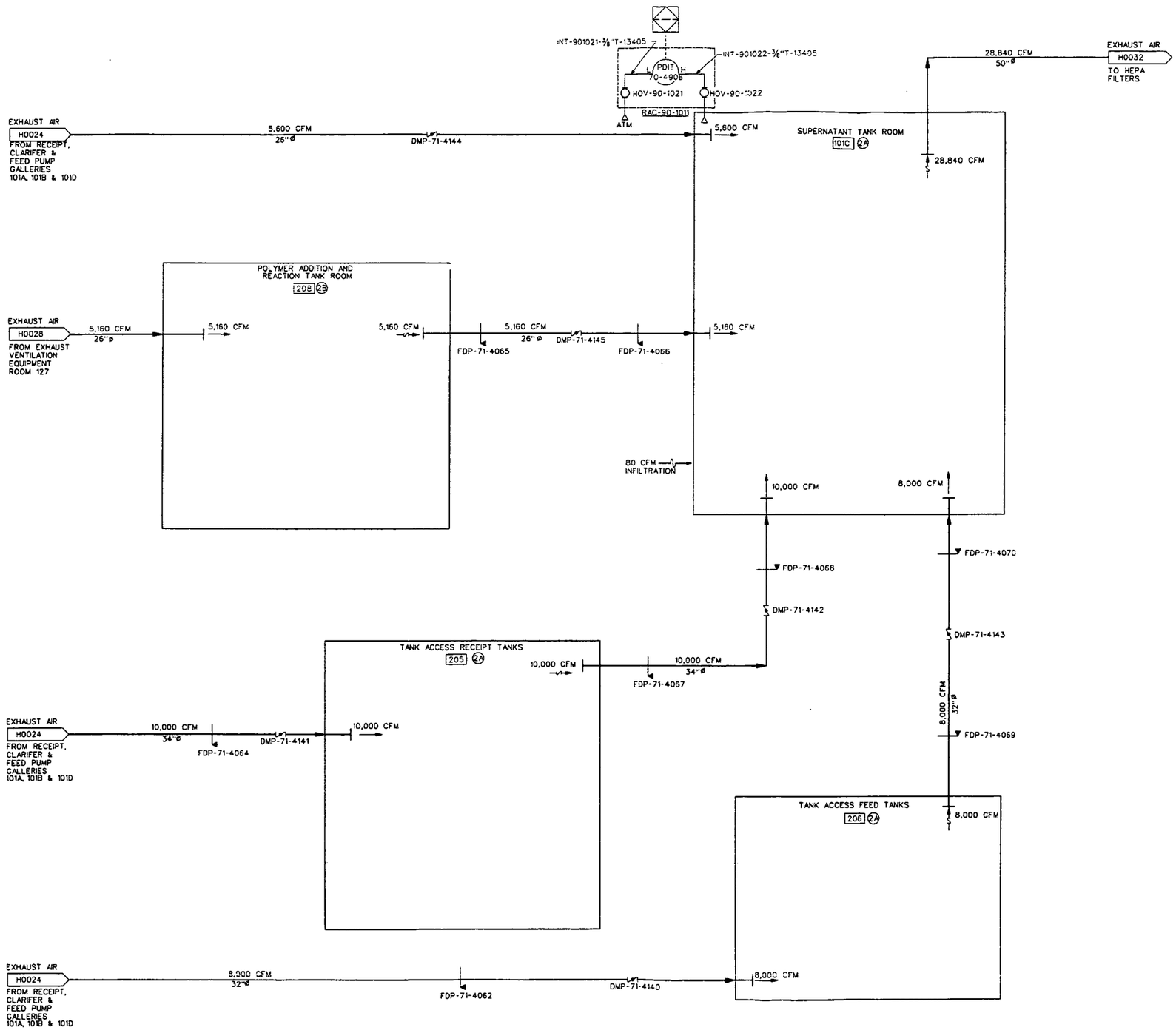

NOTES:

1. FOR HVAC CONTROLS SEQUENCE OF OPERATION SEE SHEETS H0020 AND H0021.
2. FOR INSTRUMENTATION SYMBOLS AND LEGEND SEE SHEETS N0001 AND N0002.

INFORMATION ONLY

REF DWG NO.	DRAWING TITLE
H0010	HVAC, GENERAL NOTES, SYSTEMS AND EQUIPMENT DESIGNATORS
H0011	HVAC, LEGEND, SYMBOLS & ABBREVIATIONS

Date 03-07-03

REV. NO.	ISSUE OR REVISION PURPOSE - DESCRIPTION	DATE	REV. BY	APPR.
0	ISSUED TO CONSTRUCTION	02/10/03		

INITIALS AND DATE

UNITED STATES DEPARTMENT OF ENERGY
FERNALD ENVIRONMENTAL MANAGEMENT PROJECT

THIS DRAWING PREPARED BY
JE JACOBS
125 Broadway Ave. Oak Ridge, Tennessee 37830
Tel: 865-220-4800
Fax: 865-220-6170

PROJECT NAME
SILOS 1 AND 2

DRAWING TITLE
HVAC
REMEDIATION FACILITY
CONTROL DIAGRAM

DRAWN BY	DATE	TECHNICAL LEAD	DATE	CHECKED BY	DATE
	02/10/03		2/10/03		3/14/03

PLANT/BLDG. NO.	FLOOR	SCALE	CLASS
94B	N/A	NONE	U

SUBMITTED FOR 30% ISSUE	SUBMITTED FOR 60% ISSUE	SUBMITTED FOR 90% ISSUE
TECH LEAD	TECH LEAD	TECH LEAD
DATE	DATE	DATE

T.O. NUMBER	PROJECT NO.	DRAWING INDEX CODE NO.	SHEET NO.	REV. NO.
N/A	40750	94X-3900-H-01697	H0025	0

JEC PROJECT NO.	FILENAME
35H19603	94ah1697.DGN

DATE: 02/08/03
TIME: 05:25 PM
USER: BSkobek
DESIGN FILE: h:\hvac\drawings\control diagrams\94xh1697.dgn

4822

000073

4822

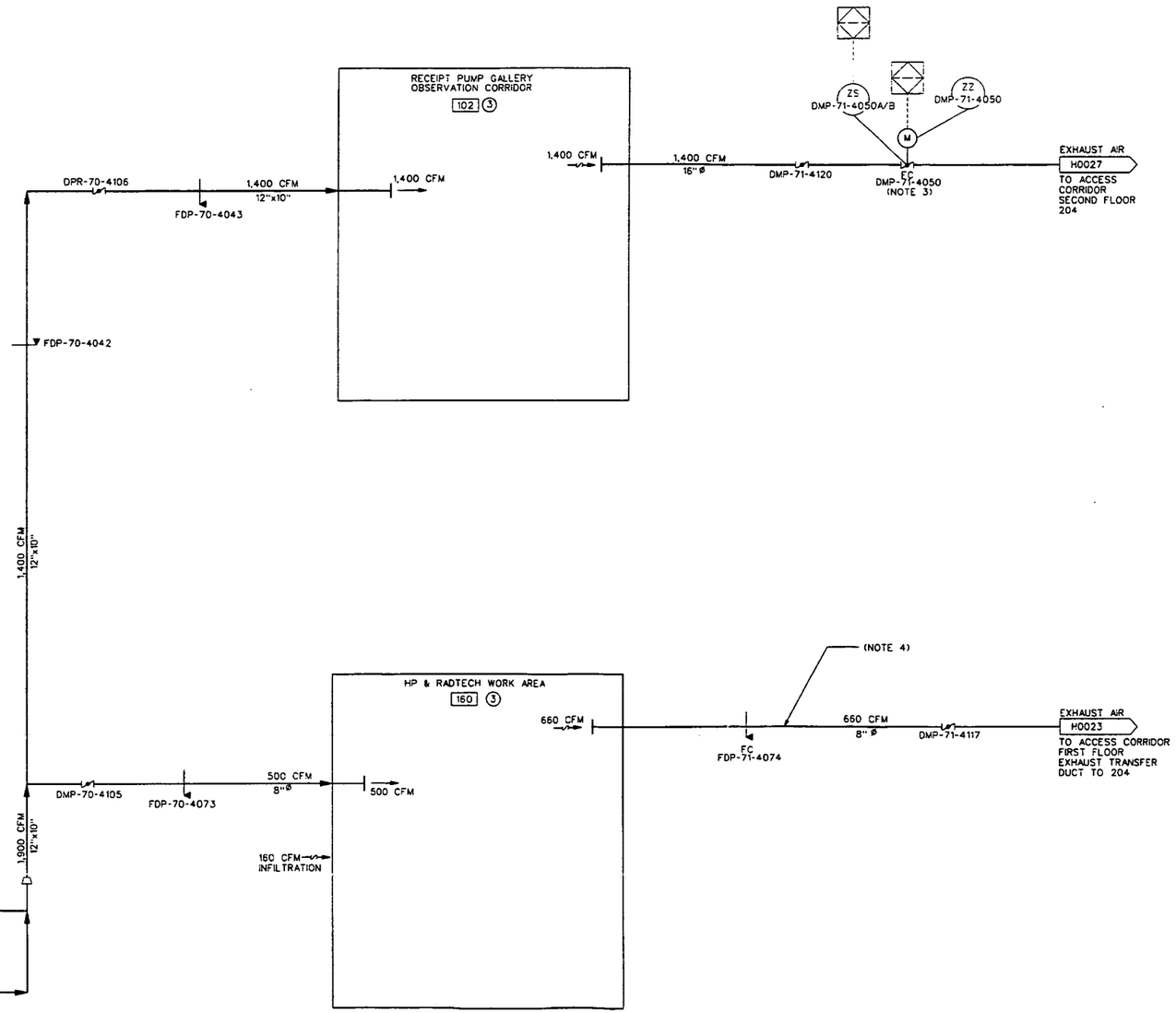

NOTES:

1. FOR HVAC CONTROLS SEQUENCE OF OPERATION SEE SHEETS H0020 AND H0021.
2. FOR INSTRUMENTATION SYMBOLS AND LEGEND SEE SHEETS N0001 AND N0002.
3. DMP-71-4050 IS PROVIDED TO ALLOW FOR REMOTE-OPERATED ISOLATION BETWEEN VENTILATION ZONES 3 AND 2B.
4. ROOM 160 IS ISOLABLE FROM DMP-71-4049 (SEE SHEET H0023).

INFORMATION ONLY

REF DWG NO.	DRAWING TITLE
H0010	HVAC, GENERAL NOTES, SYSTEMS AND EQUIPMENT DESIGNATORS
H0011	HVAC, LEGEND, SYMBOLS & ABBREVIATIONS

(1) For Conform to the Submitted Requirements
(2) As Built Drawings - Incorporate the Changes
(3) Not Required
Date 03-03-03

REV. NO.	ISSUE OR REVISION PURPOSE - DESCRIPTION	DATE	REV. BY	APPR
0	ISSUED TO CONSTRUCTION	02/10/03		

INITIALS AND DATE

UNITED STATES DEPARTMENT OF ENERGY
FERNALD ENVIRONMENTAL MANAGEMENT PROJECT

THIS DRAWING PREPARED BY
JE JACOBS 125 Broadway Ave. Oak Ridge, Tennessee 37830 Tel: 865-220-4600 Fax: 865-220-4170

PROJECT NAME
SILOS 1 AND 2

DRAWING TITLE
HVAC
REMEDIATION FACILITY
CONTROL DIAGRAM

DRAWN BY	DATE	TECHNICAL LEAD	DATE	CHECKED BY	DATE
	02/10/03		2/10/03		2/10/03

PLANT/BLDG. NO.	FLOOR	SCALE	CLASS
94B	N/A	NONE	U

SUBMITTED FOR 30% ISSUE	SUBMITTED FOR 60% ISSUE	SUBMITTED FOR 90% ISSUE
TECH LEAD	TECH LEAD	TECH LEAD
DATE	DATE	DATE

T.O. NUMBER	PROJECT NO.	DRAWING INDEX CODE NO.	SHEET NO.	REV. NO.
N/A	40750	94X-3900-H-01698	H0026	0

JEG PROJECT NO.	FILENAME
35H19603	94xh1698.DGN

000074

DATE: 02/08/03
TIME: 05:26 PM
USER: BSkobek
DESIGN FILE: I:\hvac\drawings\control diagrams\94xh1698.dgn

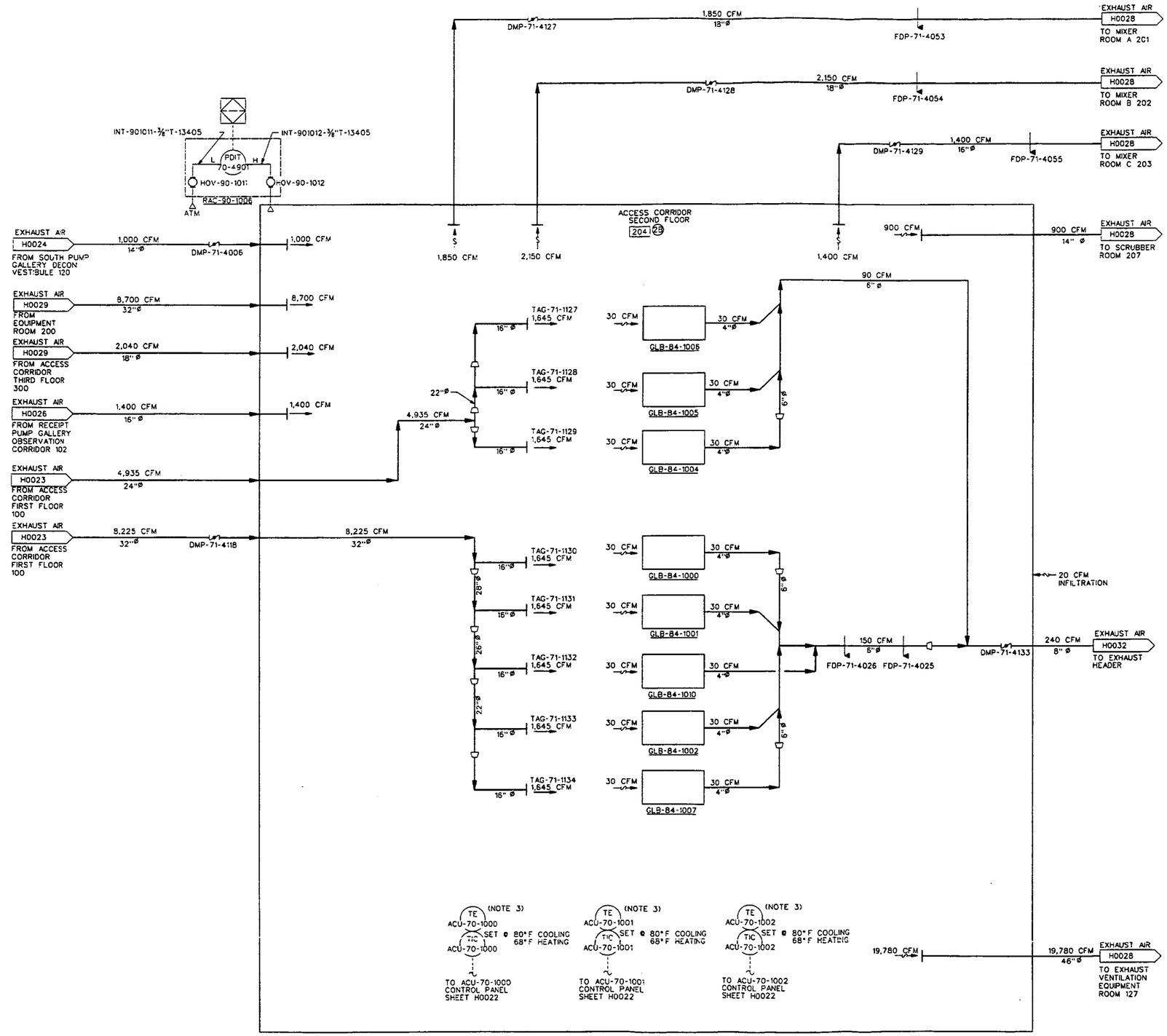

NOTES:

1. FOR HVAC CONTROLS SEQUENCE OF OPERATION SEE SHEETS H0020 AND H0021.
2. FOR INSTRUMENTATION SYMBOLS AND LEGEND SEE SHEETS N0001 AND N0002.
3. ROOM THERMOSTATS FURNISHED WITH ACU'S. (REFERENCE EQUIPMENT SPECIFICATION ES-JM-ACU-70-1000.)

INFORMATION ONLY

REF DWG NO.	DRAWING TITLE
H0010	HVAC, GENERAL NOTES,SYSTEMS AND EQUIPMENT DESIGNATORS
H0011	HVAC, LEGEND, SYMBOLS & ABBREVIATIONS

Date 03-03-03

REV. NO.	ISSUE OR REVISION PURPOSE - DESCRIPTION	DATE	REV. BY	APPR
0	ISSUED TO CONSTRUCTION	02/10/03		

INITIALS AND DATE

UNITED STATES DEPARTMENT OF ENERGY
FERNALD ENVIRONMENTAL MANAGEMENT PROJECT

THIS DRAWING PREPARED BY

JE JACOBS 125 Broadway Ave. Oak Ridge, Tennessee 37830 Tel: 865-220-4600 Fax: 865-220-6170

PROJECT NAME
SILOS 1 AND 2

DRAWING TITLE
HVAC
REMEDIATION FACILITY
CONTROL DIAGRAM

DRAWN BY	DATE	TECHNICAL LEAD	DATE	CHECKED BY	DATE
	02/10/03		2/10/03		2/10/03

PLANT/BLDG. NO.	FLOOR #	SCALE	CLASS
94B	N/A	NONE	U

SUBMITTED FOR 30% ISSUE	SUBMITTED FOR 60% ISSUE	SUBMITTED FOR 90% ISSUE
TECH LEAD	TECH LEAD	TECH LEAD
DATE	DATE	DATE

T.O. NUMBER	PROJECT NO.	DRAWING INDEX CODE NO.	SHEET NO.	REV. NO.
N/A	40750	94X-3900-H-01699	H0027	0

JEG PROJECT NO. 35H19603 FILENAME 94xh1699.DGN

DATE: 02/08/03
TIME: 05:48:28 PM
USER: BSabosek
DESIGN FILE: I:\hvac\drawings\control diagrams\94xh1699.dgn

4822

000075

4822

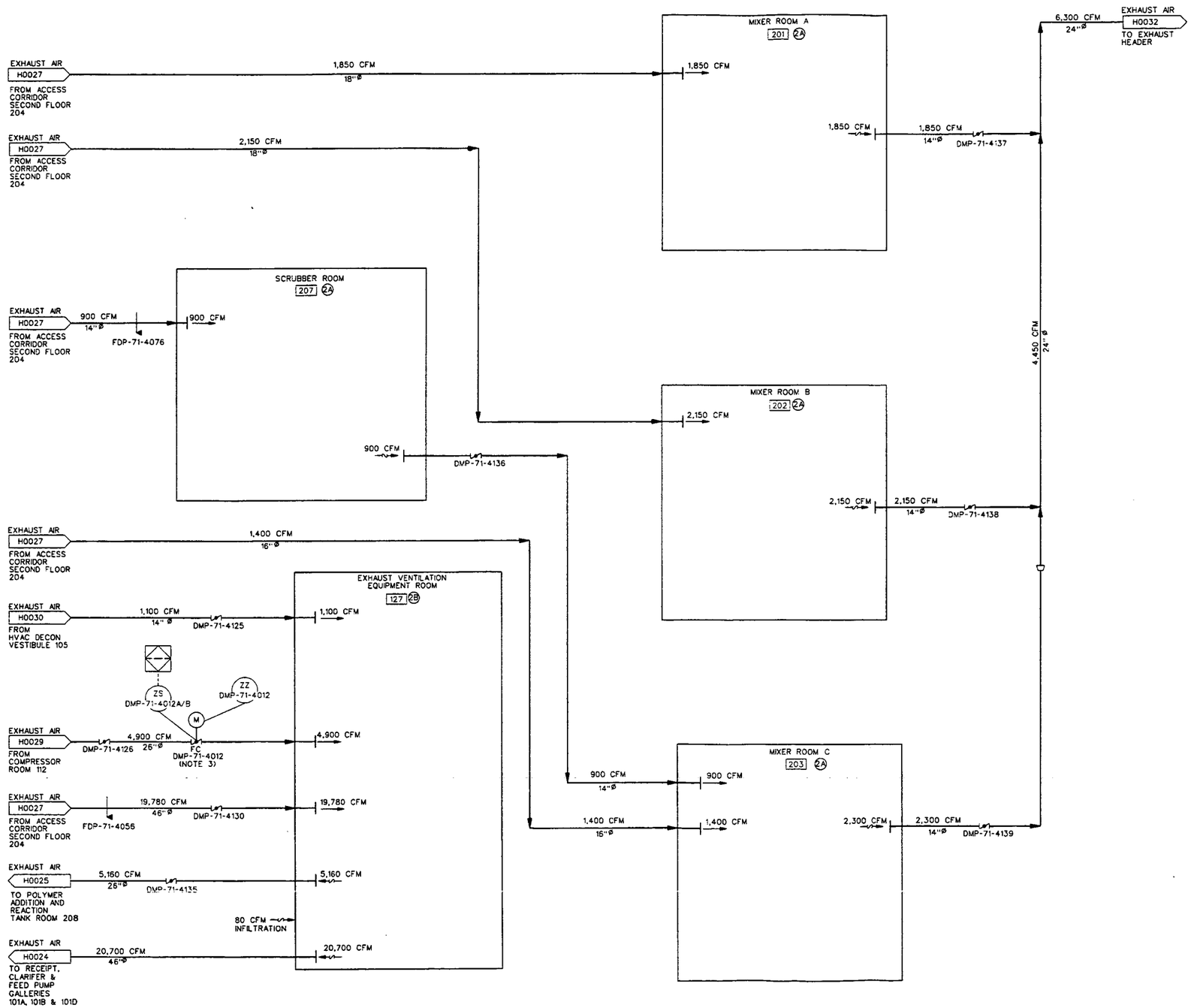

NOTES:

1. FOR HVAC CONTROLS SEQUENCE OF OPERATION SEE SHEETS H0020 AND H0021.
2. FOR INSTRUMENTATION SYMBOLS AND LEGEND SEE SHEETS N0001 AND N0002.
3. DMP-71-4012 IS PROVIDED TO ALLOW FOR REMOTE OPERATED ISOLATION BETWEEN VENTILATION ZONES 3 AND 2B.

INFORMATION ONLY

REF DWG NO.	DRAWING TITLE
H0010	HVAC, GENERAL NOTES, SYSTEMS AND EQUIPMENT DESIGNATORS
H0011	HVAC, LEGEND, SYMBOLS & ABBREVIATIONS

Ref. Contents to the Enforced Requirements
U.S. Department of Energy - Fernald Area Office
Date 03-03-03

REV. NO.	ISSUE OR REVISION PURPOSE - DESCRIPTION	DATE	REV. BY	APPR
0	ISSUED TO CONSTRUCTION	02/10/03		

INITIALS AND DATE

UNITED STATES DEPARTMENT OF ENERGY
FERNALD ENVIRONMENTAL MANAGEMENT PROJECT

THIS DRAWING PREPARED BY
JACOBS
125 Broadway Ave.
Oak Ridge, Tennessee 37830
Tel: 865-220-4000
Fax: 865-220-4170

PROJECT NAME
SILOS 1 AND 2

DRAWING TITLE
HVAC
REMEDIATION FACILITY
CONTROL DIAGRAM

DRAWN BY	DATE	TECHNICAL LEAD	DATE	CHECKED BY	DATE
	02/10/03		2/10/03		2/10/03

PLANT/BLDG. NO.	FLOOR	SCALE	CLASS
94B	N/A	NONE	U

SUBMITTED FOR 30% ISSUE	SUBMITTED FOR 60% ISSUE	SUBMITTED FOR 90% ISSUE
TECH LEAD	TECH LEAD	TECH LEAD
DATE	DATE	DATE

T.O. NUMBER	PROJECT NO.	DRAWING INDEX CODE NO.	SHEET NO.	REV. NO.
N/A	40750	94X-3900-H-01700	H0028	0

JEC PROJECT NO.	FILENAME
35H19603	94xh1700.DGN

000076

DATE: 02/08/03
TIME: 05:29 PM
USER: BSlabbek
DESIGN FILE: h:\hvac\drawings\contract\dgns\94xh1700.dgn

4822

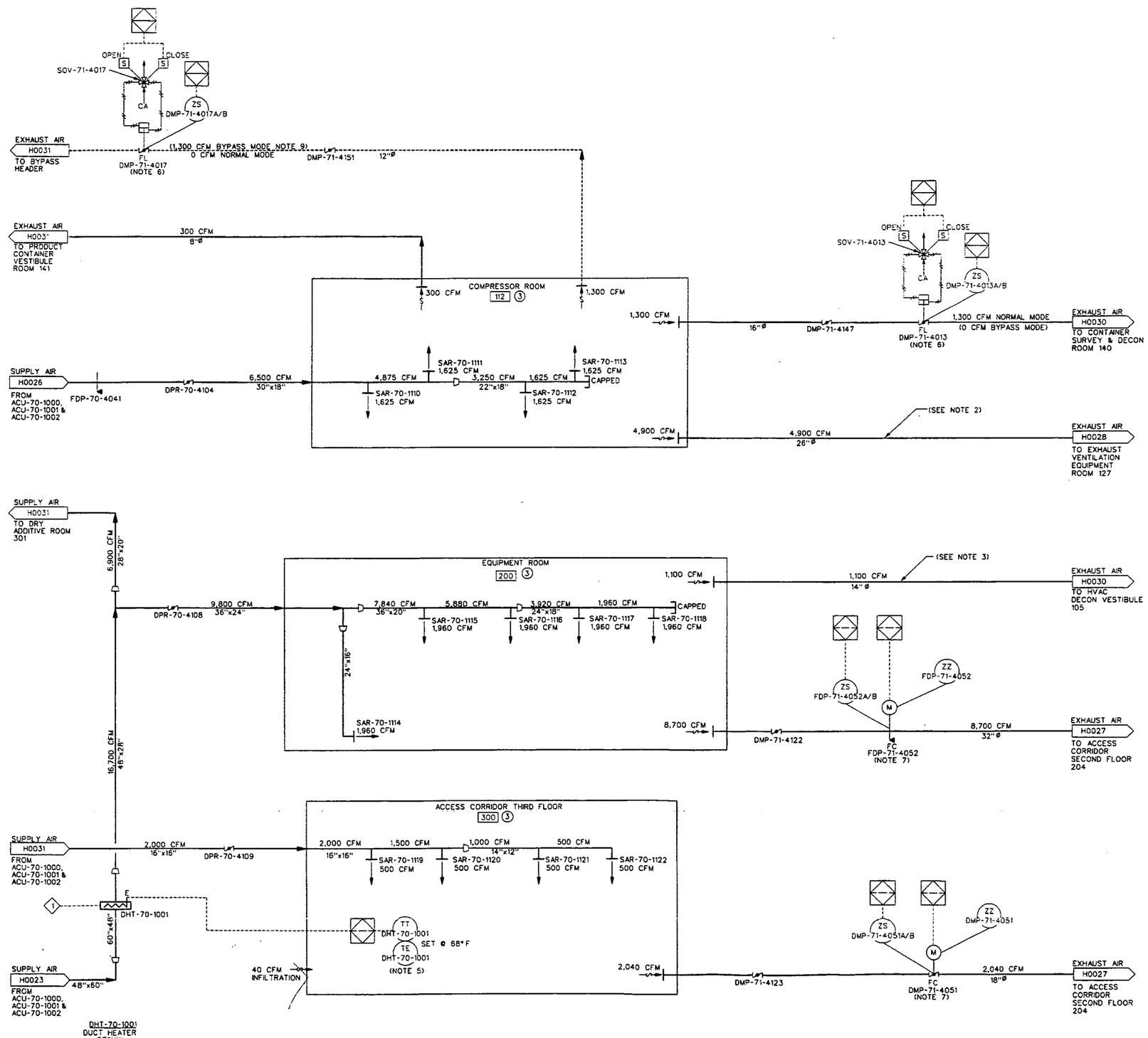

NOTES:

1. FOR HVAC CONTROLS SEQUENCE OF OPERATION SEE SHEETS H0020 AND H0021.
2. ROOM NO. 112 IS ISOLABLE FROM DMP-71-4012 (SEE H0028).
3. ROOM NO. 200 IS ISOLABLE FROM DMP-71-4011 (SEE H0030).
4. FOR INSTRUMENTATION SYMBOLS AND LEGEND SEE SHEETS N0001 AND N0002.
5. TE, TT FURNISHED WITH DUCT HEATER. (REFERENCE CONSTRUCTION SPECIFICATION SECTION 15895.)
6. DMP-71-4013 & 4017 ARE PROVIDED TO ALLOW FOR AUTOMATIC CONTROL FOR BYPASS MODE OPERATION, AND ALSO TO ALLOW FOR REMOTE OPERATED ISOLATION BETWEEN VENTILATION ZONES 3 AND 2B.
7. DMP-71-4051, & FDP-71-4052 ARE PROVIDED TO ALLOW FOR REMOTE OPERATED ISOLATION BETWEEN VENTILATION ZONES 3 AND 2B. IN ADDITION, FDP-71-4052 ALSO ALLOWS FOR AUTOMATIC CLOSURE IN THE EVENT OF A SIGNAL FROM THE FIRE ALARM SYSTEM.
8. FOR EQUIPMENT SIZES AND INFORMATION SEE EQUIPMENT SCHEDULES SHEET H0074 AND H0075.
9. -------- INDICATES BYPASS DUCTWORK. SEE PARAGRAPH 7.0 ON SHEET H0020 FOR DETAILS OF BYPASS MODE OPERATION.

INTERLOCKS:

1 HARD-WIRED INTERLOCK FROM ACU-70-1000, 1001 & 1002

INFORMATION ONLY

REF DWG NO.	DRAWING TITLE
H0010	HVAC, GENERAL NOTES, SYSTEMS AND EQUIPMENT DESIGNATORS
H0011	HVAC, LEGEND, SYMBOLS & ABBREVIATIONS

03-03-03

REV. NO.	ISSUE OR REVISION PURPOSE - DESCRIPTION	DATE	REV. BY	APPR.
0	ISSUED TO CONSTRUCTION	02/10/03		

INITIALS AND DATE

UNITED STATES DEPARTMENT OF ENERGY
FERNALD ENVIRONMENTAL MANAGEMENT PROJECT

THIS DRAWING PREPARED BY
JACOBS

PROJECT NAME
SILOS 1 AND 2

DRAWING TITLE
HVAC
REMEDIATION FACILITY
CONTROL DIAGRAM

DRAWN BY	DATE	TECHNICAL LEAD	DATE	CHECKED BY	DATE
	02/07/03		2/10/03		2/10/03

PLANT/BLDG. NO.	FLOOR	SCALE	CLASS
94B	N/A	NONE	U

SUBMITTED FOR 30% ISSUE	SUBMITTED FOR 60% ISSUE	SUBMITTED FOR 90% ISSUE
TECH LEAD	TECH LEAD	TECH LEAD
DATE	DATE	DATE

T.O. NUMBER	PROJECT NO.	DRAWING INDEX CODE NO.	SHEET NO.	REV. NO.
N/A	40750	94X-3900-H-01701	H0029	0

JEG PROJECT NO. 35H19603 FILENAME 94xh1701.DGN

000077

DATE: 02/06/03 USER: BSkodek

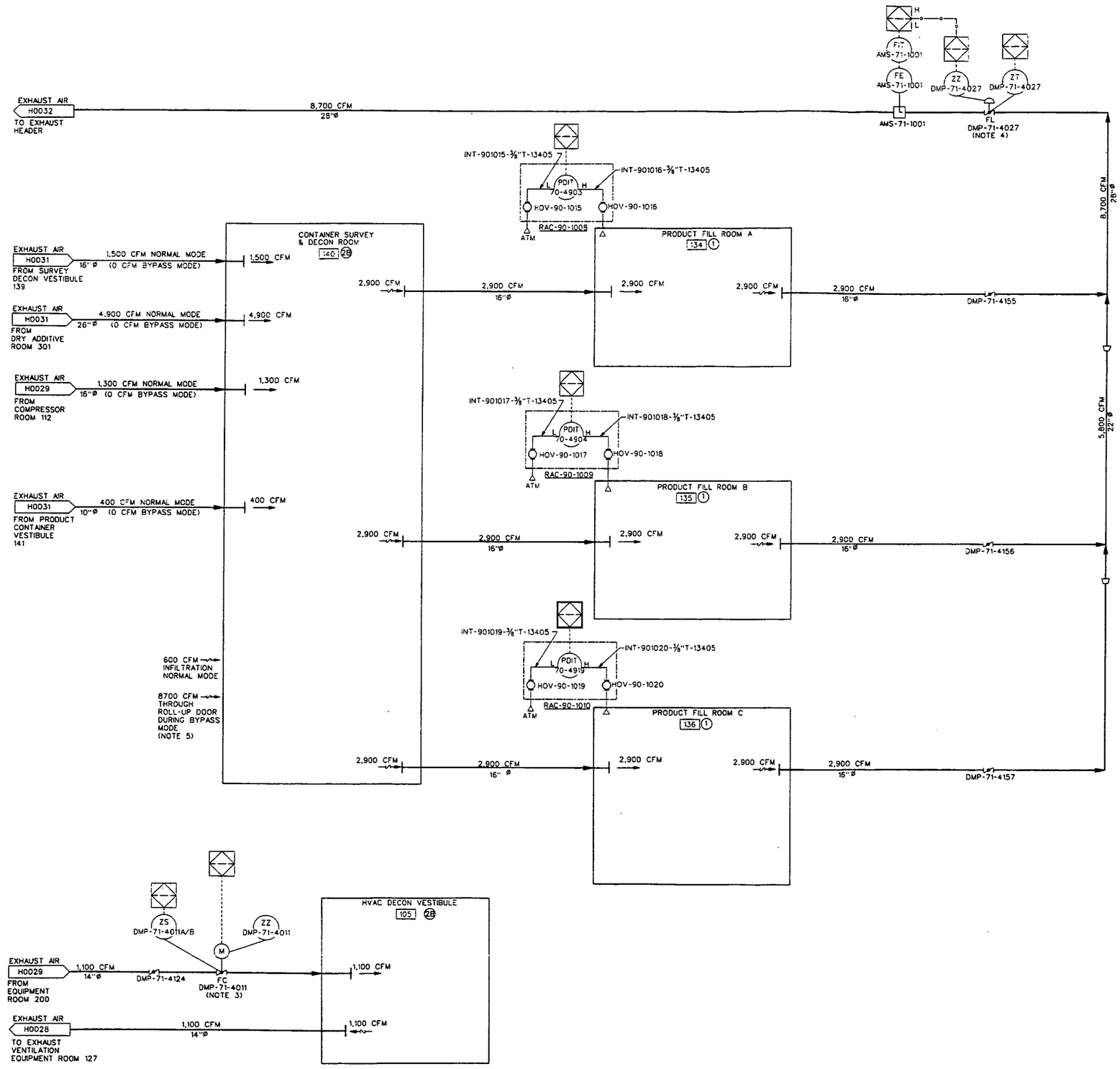

NOTES:

1. FOR HVAC CONTROLS SEQUENCE OF OPERATION SEE SHEETS H0020 AND H0021.
2. FOR INSTRUMENTATION SYMBOLS AND LEGEND SEE SHEETS N0001 AND N0002.
3. DMP-71-4011 IS PROVIDED TO ALLOW FOR REMOTE OPERATED ISOLATION BETWEEN VENTILATION ZONES 3 AND 2B.
4. DMP-71-4027 IS PROVIDED TO AUTOMATICALLY CONTROL THE AMOUNT OF AIR BEING EXHAUSTED FROM THE FILL ROOMS.
5. REFERENCE PARAGRAPH 7.0 ON SHEET H0020 FOR DETAILS OF BYPASS MODE OPERATION.

INFORMATION ONLY

REF DWG NO.	DRAWING TITLE
H0010	HVAC, GENERAL NOTES,SYSTEMS AND EQUIPMENT DESIGNATORS
H0011	HVAC, LEGEND, SYMBOLS & ABBREVIATIONS

LEAD Conforms to the Succeeded Requirements
(1)B - Major Concerns, Comments and Changes
(1)F - Minor Concerns, Comments and Changes
Date 03-03-03

REV. NO.	ISSUE OR REVISION PURPOSE - DESCRIPTION	DATE	REV. BY	APPR
0	ISSUED TO CONSTRUCTION	02/10/03		

INITIALS AND DATE

UNITED STATES DEPARTMENT OF ENERGY
FERNALD ENVIRONMENTAL MANAGEMENT PROJECT

THIS DRAWING PREPARED BY
JE JACOBS
125 Broadway Ave.
Oak Ridge, Tennessee 37830
Tel: 865-220-4800
Fax: 865-220-6170

PROJECT NAME
SILOS 1 AND 2

DRAWING TITLE
HVAC
REMEDIATION FACILITY
CONTROL DIAGRAM

DRAWN BY	DATE	TECHNICAL LEAD	DATE	CHECKED BY	DATE
	02/10/03		2/10/03		2/11/03

PLANT/BLDG. NO.	FLOOR	SCALE	CLASS
94B	N/A	NONE	U

SUBMITTED FOR 30% ISSUE	SUBMITTED FOR 60% ISSUE	SUBMITTED FOR 90% ISSUE
TECH LEAD	TECH LEAD	TECH LEAD
DATE	DATE	DATE

T.O. NUMBER	PROJECT NO.	DRAWING INDEX CODE NO.	SHEET NO.	REV. NO.
N/A	40750	94X-3900-H-01702	H0030	0

JEG PROJECT NO. 35H19603
FILENAME 94xh1702.DGN

DATE: 02/08/03
TIME: 05:46:39 PM
USER: BSlabbek
DESIGN FILE: I:\hvac\drawings\control diagrams\94xh1702.dgn

4822

000078

4822

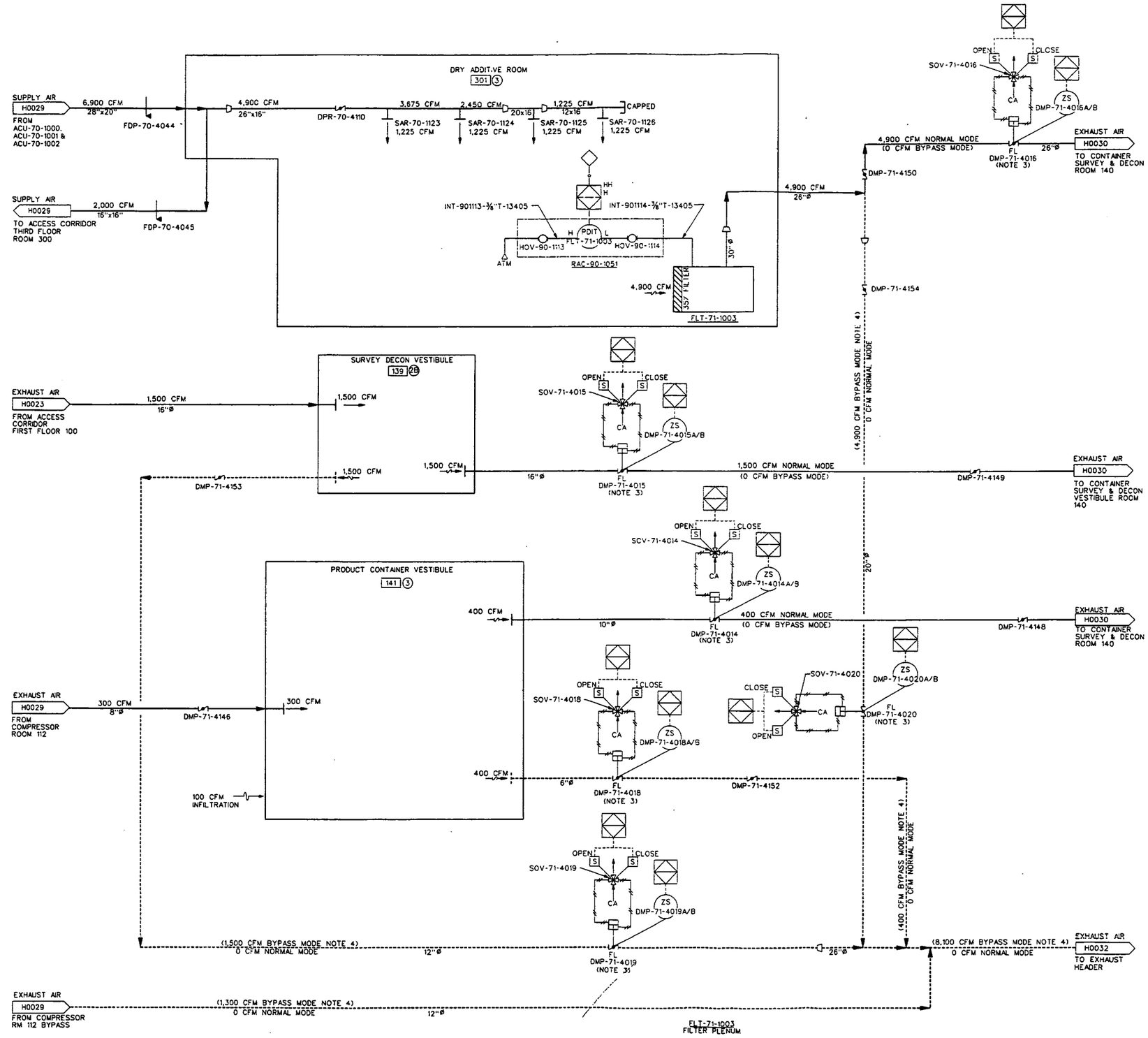

NOTES:

1. FOR HVAC CONTROLS SEQUENCE OF OPERATION SEE SHEETS H0020 AND H0021.
2. FOR INSTRUMENTATION SYMBOLS AND LEGEND SEE SHEETS N0001 AND N0002.
3. DMP-71-4014 THRU 4016 AND DMP-71-4018 THRU 4020 ARE PROVIDED TO ALLOW FOR AUTOMATIC CONTROL FOR BYPASS MODE OPERATION. IN ADDITION, DMP-71-4014, 4016, 4018, & 4020 ALLOW FOR REMOTE OPERATED ISOLATION BETWEEN VENTILATION ZONES 3 AND 2B.
4. ------- INDICATES BYPASS DUCTWORK. SEE PARAGRAPH 7.0 ON SHEET H0020 FOR DETAILS OF BYPASS MODE OPERATION.

INFORMATION ONLY

REF DWG NO.	DRAWING TITLE
H0010	HVAC, GENERAL NOTES, SYSTEMS AND EQUIPMENT DESIGNATORS
H0011	HVAC, LEGEND, SYMBOLS & ABBREVIATIONS

(1) Conforms to the S. Standard Requirements
(2) Not in Compliance - Inconsistent and Potential
Date 03-03-03

REV NO.	ISSUE OR REVISION PURPOSE - DESCRIPTION	DATE	REV. BY	APPR.
0	ISSUED TO CONSTRUCTION	02/10/03		

INITIALS AND DATE

UNITED STATES DEPARTMENT OF ENERGY
FERNALD ENVIRONMENTAL MANAGEMENT PROJECT

THIS DRAWING PREPARED BY
JE JACOBS 125 Broadway Ave., Oak Ridge, Tennessee 37830 Tel: 865-270-4800 Fax: 865-270-6110

PROJECT NAME
SILOS 1 AND 2

DRAWING TITLE
HVAC
REMEDIATION FACILITY
CONTROL DIAGRAM

DRAWN BY	DATE	TECHNICAL LEAD	DATE	CHECKED BY	DATE
	2/10/03		2/10/03		3/10/03

PLANT/BLDG NO.	FLOOR	SCALE	CLASS
94B	N/A	NONE	U

SUBMITTED FOR 30% ISSUE	SUBMITTED FOR 60% ISSUE	SUBMITTED FOR 90% ISSUE
TECH LEAD	TECH LEAD	TECH LEAD
DATE	DATE	DATE

T.O. NUMBER	PROJECT NO.	DRAWING INDEX CODE NO.	SHEET NO.	REV. NO.
N/A	40750	94X-3900-H-01703	H0031	0

JEG PROJECT NO.	FILENAME
35H19603	94xh1703.DGN

000079

DATE: 02/08/03
TIME: 05:45:32 PM
USER: BSlabbekk
DESIGN FILE: I:\hvac\drawings\control diagrams\94xh1703.dgn

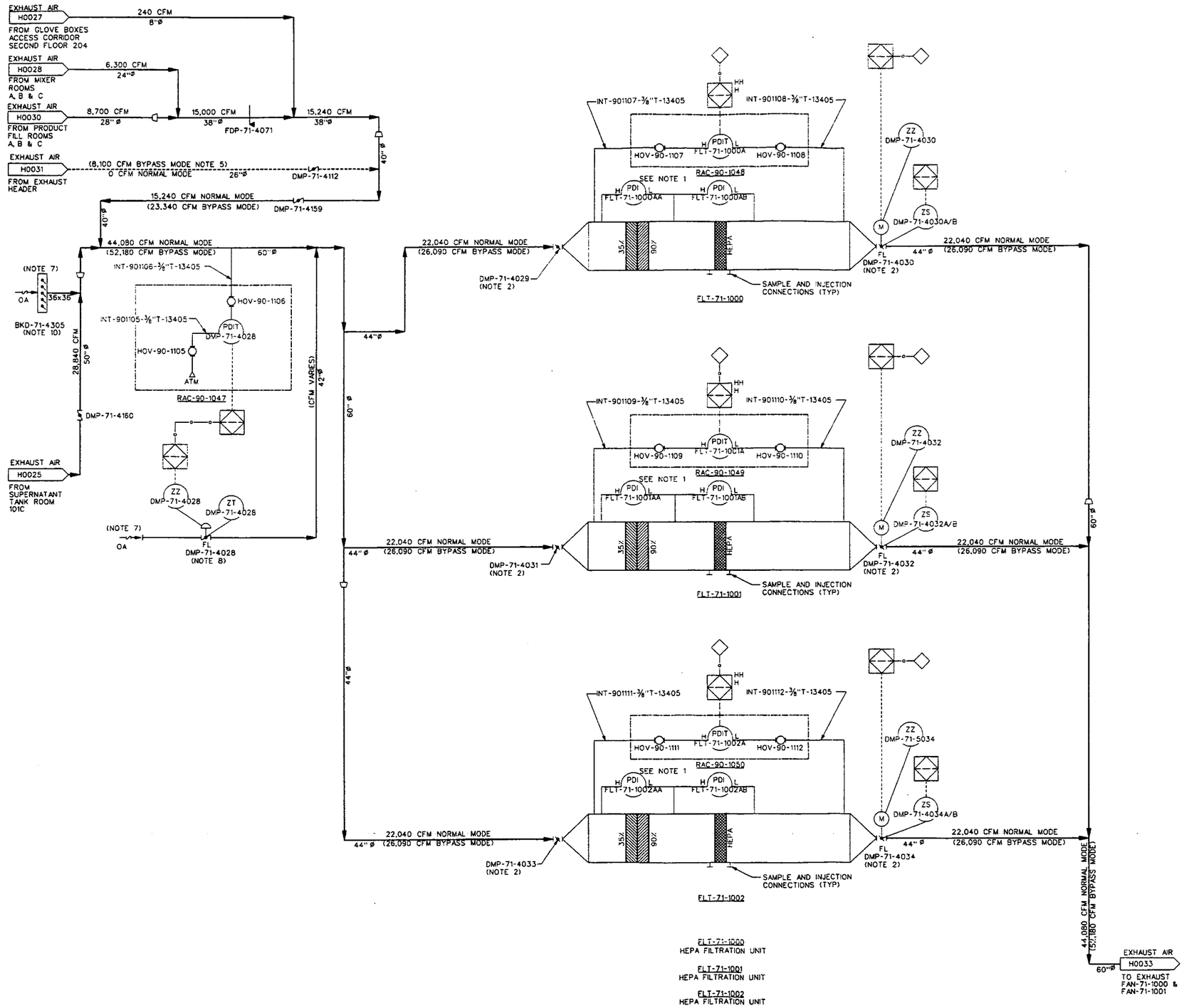

NOTES:

1. PDI'S ARE FURNISHED, MOUNTED WITH FILTRATION UNITS. SEE SPECIFICATION ES-JM-FLT-71-1000
2. DAMPERS, ACTUATORS AND POISTIONERS FURNISHED, MOUNTED WITH FILTRATION UNITS. (REFERENCE EQUIPMENT SPECIFICATION ES-FLT-71-1000.)
3. FOR HVAC CONTROLS SEQUENCE OF OPERATION SEE SHEETS H0020 AND H0021.
4. FOR INSTRUMENTATION SYMBOLS AND LEGEND SEE SHEETS N0001 AND N0002.
5. ANY TWO HEPA FILTER UNITS WILL BE OPERATING AND ONE STANDING-BY AT ANY GIVEN TIME.
6. ------- INDICATES BYPASS DUCTWORK. SEE PARAGRAPH 7.0 ON SHEET H0020 FOR DETAILS OF BYPASS MODE OPERATION.
7. OUTSIDE AIR INLET SHALL BE PROTECTED BY A BIRDSCREEN.
8. DMP-71-4028 IS PROVIDED TO AUTOMATICALLY CONTROL THE AMOUNT OF OUTSIDE AIR INTRODUCED INTO THE EXHAUST HEADER IN ORDER TO LIMIT THE NEGATIVE PRESSURE WITHIN THE EXHAUST HEADER. SEE PARAGRAPH 9.3 ON SHEET H0020.
9. FOR EQUIPMENT SIZES AND INFORMATION SEE EQUIPMENT SCHEDULES SHEET H0074 AND H0075.
10. REFERENCE PARAGRAPH 9.3 ON SHEET H0020.

INFORMATION ONLY

REF DWG NO.	DRAWING TITLE
H0010	HVAC, GENERAL NOTES, SYSTEMS AND EQUIPMENT DESIGNATORS
H0011	HVAC, LEGEND, SYMBOLS & ABBREVIATIONS

I, [illegible] Conform to the Submittal Requirements, [illegible] Date 02-03-03

REV. NO.	ISSUE OR REVISION PURPOSE - DESCRIPTION	DATE	REV. BY	APPR
0	ISSUED TO CONSTRUCTION	02/10/03		

INITIALS AND DATE

UNITED STATES DEPARTMENT OF ENERGY
FERNALD ENVIRONMENTAL MANAGEMENT PROJECT

THIS DRAWING PREPARED BY
JACOBS
125 Broadway Ave. Oak Ridge, Tennessee 37830 Tel: 865-220-6000 Fax: 865-220-6170

PROJECT NAME: SILOS 1 AND 2

DRAWING TITLE: HVAC REMEDIATION FACILITY CONTROL DIAGRAM

DRAWN BY	DATE	TECHNICAL LEAD	DATE	CHECKED BY	DATE
[illegible]	2/10/03	[illegible]	2/10/03	[illegible]	2/10/03

PLANT/BLDG NO.	FLOOR	SCALE	CLASS
94B	N/A	NONE	U

SUBMITTED FOR 30% ISSUE	SUBMITTED FOR 60% ISSUE	SUBMITTED FOR 90% ISSUE
TECH LEAD	TECH LEAD	TECH LEAD
DATE	DATE	DATE

T.O. NUMBER	PROJECT NO.	DRAWING INDEX CODE NO.	SHEET NO.	REV. NO.
N/A	40750	94X-3900-H-01704	H0032	0

JEG PROJECT NO.	FILENAME
35H19603	94xh1704.DGN

DATE: 02/08/03
USER: BSlobbek

48-22

000080

4822

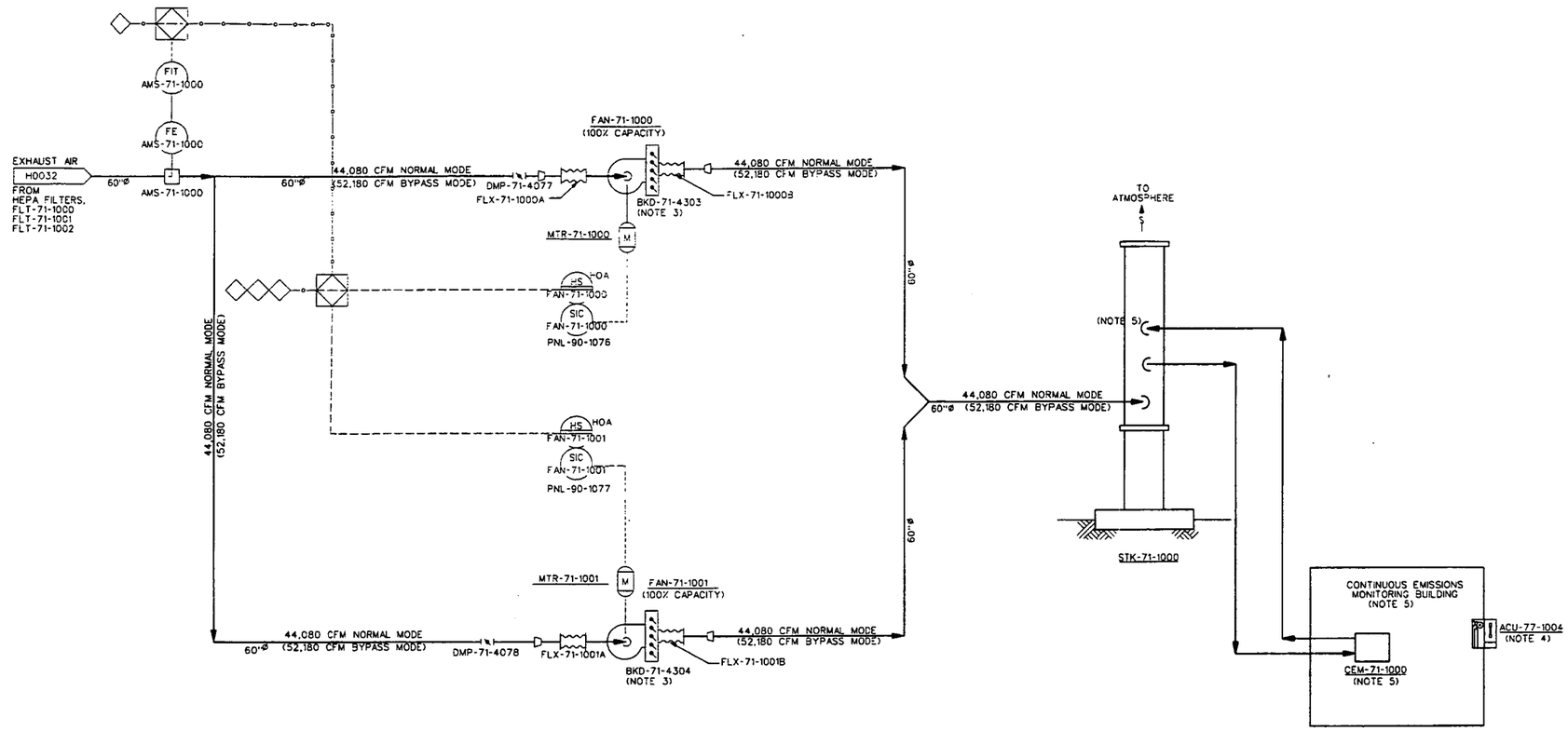

FAN-71-1000
EXHAUST FAN
52,180 ACFM MAX
(48,800 SCFM) MIN

MTR-71-1000
FAN MOTOR
150 HP

FAN-71-1001
EXHAUST FAN
52,180 ACFM MAX
(48,800 SCFM) MIN

MTR-71-1001
FAN MOTOR
150 HP

STK-71-1000
EXHAUST STACK
54"Ø x 130'-0" HIGH

CEM-71-1000
CONTINUOUS EMISSIONS
MONITORING

ACU-77-1004
AIR CONDITIONING UNIT

NOTES:

1. FOR HVAC CONTROLS SEQUENCE OF OPERATION SEE SHEETS H0020 AND H0021.
2. FOR INSTRUMENTATION SYMBOLS AND LEGEND SEE SHEETS N0001 AND N0002.
3. BACKDRAFT DAMPERS ARE FURNISHED WITH FANS. (REFERENCE EQUIPMENT SPECIFICATION ES-JM-FAN-71-1000.)
4. ACU FURNISHED WITH CEM BUILDING. (REFERENCE CONSTRUCTION SPECIFICATION SECTION 13125.)
5. ISOKINETIC STACK SAMPLING SYSTEM (CEM-71-1000) WILL BE PROVIDED BY FLUOR FERNALD, INC.
6. FOR EQUIPMENT SIZES AND INFORMATION SEE EQUIPMENT SCHEDULES SHEET H0074 AND H0075.

INFORMATION ONLY

REF DWG NO.	DRAWING TITLE
H0010	HVAC, GENERAL NOTES, SYSTEMS AND EQUIPMENT DESIGNATORS
H0011	HVAC, LEGEND, SYMBOLS & ABBREVIATIONS

Date 03-03-03

REV. NO.	ISSUE OR REVISION PURPOSE - DESCRIPTION	DATE	REV. BY	APPR.
0	ISSUED TO CONSTRUCTION	02/10/03		

DETAILS AND DATE

UNITED STATES DEPARTMENT OF ENERGY
FERNALD ENVIRONMENTAL MANAGEMENT PROJECT

THIS DRAWING PREPARED BY
JE JACOBS
125 Broadway Ave.
Oak Ridge, Tennessee 37830
Tel: 865-220-4800
Fax: 865-220-6170

PROJECT NAME
SILOS 1 AND 2

DRAWING TITLE
HVAC
REMEDIATION FACILITY
CONTROL DIAGRAM

DRAWN BY	DATE	TECHNICAL LEAD	DATE	CHECKED BY	DATE
	02/10/03		2/10/03		2/10/03

PLANT/BLDG. NO.	FLOOR	SCALE	CLASS
948	N/A	NONE	U

SUBMITTED FOR 30% ISSUE	SUBMITTED FOR 60% ISSUE	SUBMITTED FOR 90% ISSUE
TECH LEAD	TECH LEAD	TECH LEAD
DATE	DATE	DATE

T.O. NUMBER	PROJECT NO.	DRAWING INDEX CODE NO.	SHEET NO.	REV. NO.
N/A	40750	94X-3900-H-01705	H0033	0

JED PROJECT NO.	FILENAME
35H19603	94xh1705.DGN

000081

DATE: 02/10/03 USER: BSKOBEAK

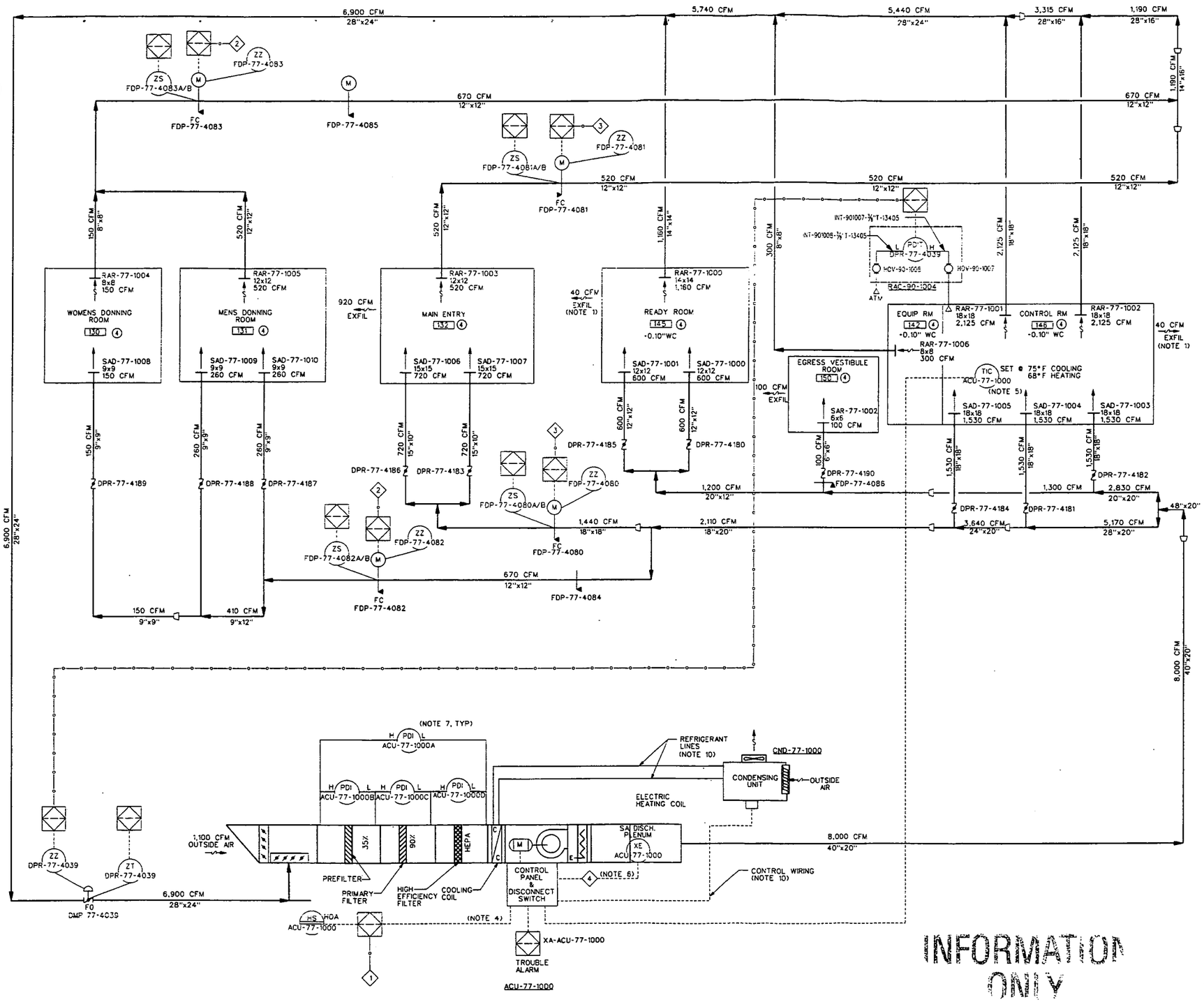

ACU-77-1000
AIR CONDITIONING UNIT
8,000 CFM @ 7½" WC
15 HP MOTOR
40KW HEATING COIL

CND-77-1000
CONDENSING UNIT
20 TON NOMINAL

INFORMATION ONLY

NOTES:

1. THE ROOM EXFILTRATION AIR FLOW RATES ARE APPROXIMATE. ADJUST THE ROOM RETURN AIR FLOW QUANTITIES, DURING AIR SYSTEM BALANCING, IN ORDER TO OFFSET THE ACTUAL ROOM EXFILTRATION FLOW RATES TO OBTAIN THE REQUIRED ROOM PRESSURIZATION.
2. THE AIR CONDITIONING UNIT AND CONDENSING UNIT SHALL BE CONNECTED TO THE STAND-BY POWER SYSTEM.
3. FOR EQUIPMENT SIZES AND INFORMATION SEE EQUIPMENT SCHEDULES SHEETS H0074 AND H0075.
4. CONTROL PANEL/DISCONNECT SWITCH FURNISHED WITH ACU, MOUNTED AND WIRED. SINGLE SOURCE POWER SUPPLY REQUIRED. (REFERENCE EQUIPMENT SPECIFICATION ES-JM-ACU-70-1000.)
5. ROOM TEMPERATURE SENSOR FURNISHED WITH ACU, LOCATED IN CONTROL ROOM 146. (REFERENC EQUIPMENT SPECIFICATION ES-JM-ACU-70-1000.)
6. SMOKE DETECTOR FURNISHED, MOUNTED AND WIRED BY FIRE ALARM SYSTEM VENDOR.
7. PDI'S ARE FURNISHED, MOUNTED WITH ACU. (REFERENCE EQUIPMENT SPECIFICATION ES-JM-ACU-70-1000.)
8. FOR HVAC CONTROLS SEQUENCE OF OPERATION SEE SHEETS H0020 AND H0021.
9. FOR INSTRUMENTATION SYMBOLS AND LEGEND SEE SHEETS N0001 AND N0002.
10. REFRIGERATION PIPING AND CONTROL WIRING BETWEEN ACU AND CONDENSING UNIT FURNISHED AND INSTALLED BY CONTRACTOR PER MANUFACTURER'S INSTRUCTIONS.

INTERLOCKS:

1. ACU WILL SHUT DOWN ON SMOKE DETECTION IN ROOM 145 OR 146.
2. UPON SMOKE DETECTION IN EITHER ROOM 130 OR 131 FDP-77-4082 & 4083 WILL CLOSE TO ISOLATE THOSE ROOMS.
3. UPON SMOKE DETECTION IN ROOM 132, FDP-77-4080 & 4081 WILL CLOSE TO ISOLATE THAT ROOM.
4. ACU WILL SHUT DOWN ON SMOKE DETECTION. ALARM WILL BE POSTED IN CONTROL ROOM.

REF DWG NO.	DRAWING TITLE
H0010	HVAC, GENERAL NOTES, SYSTEMS AND EQUIPMENT DESIGNATORS
H0011	HVAC, LEGEND, SYMBOLS & ABBREVIATIONS

03-03-03

REV. NO.	ISSUE OR REVISION PURPOSE - DESCRIPTION	DATE	REV. BY	APPR.
0	ISSUED TO CONSTRUCTION	02/10/03		

INITIALS AND DATE

UNITED STATES DEPARTMENT OF ENERGY
FERNALD ENVIRONMENTAL MANAGEMENT PROJECT

THIS DRAWING PREPARED BY
JACOBS

PROJECT NAME: SILOS 1 AND 2

DRAWING TITLE: HVAC REMEDIATION FACILITY CONTROL ROOM CONTROL DIAGRAM

DRAWN BY	DATE	TECHNICAL LEAD	DATE	CHECKED BY	DATE
	06/04/02		2/10/03		2/11/03

PLANT/BLDG. NO.	FLOOR	SCALE	CLASS
94B	FIRST	NONE	U

SUBMITTED FOR 30% ISSUE	SUBMITTED FOR 60% ISSUE	SUBMITTED FOR 90% ISSUE
TECH LEAD	TECH LEAD	TECH LEAD
DATE	DATE	DATE

T.O. NUMBER	PROJECT NO.	DRAWING INDEX CODE NO.	SHEET NO.	REV. NO.
N/A	40750	94X-3900-H-01706	H0034	0

JES PROJECT NO. 35H19603 FILENAME 94xh1706.DGN

DATE: 02/10/03
TIME: 05:04:33 PM
USER: BS10084
DESIGN FILE: h:\hvac\drawings\CONTROL DIAGRAMS\94XH1706.dgn

4822

000082

4822

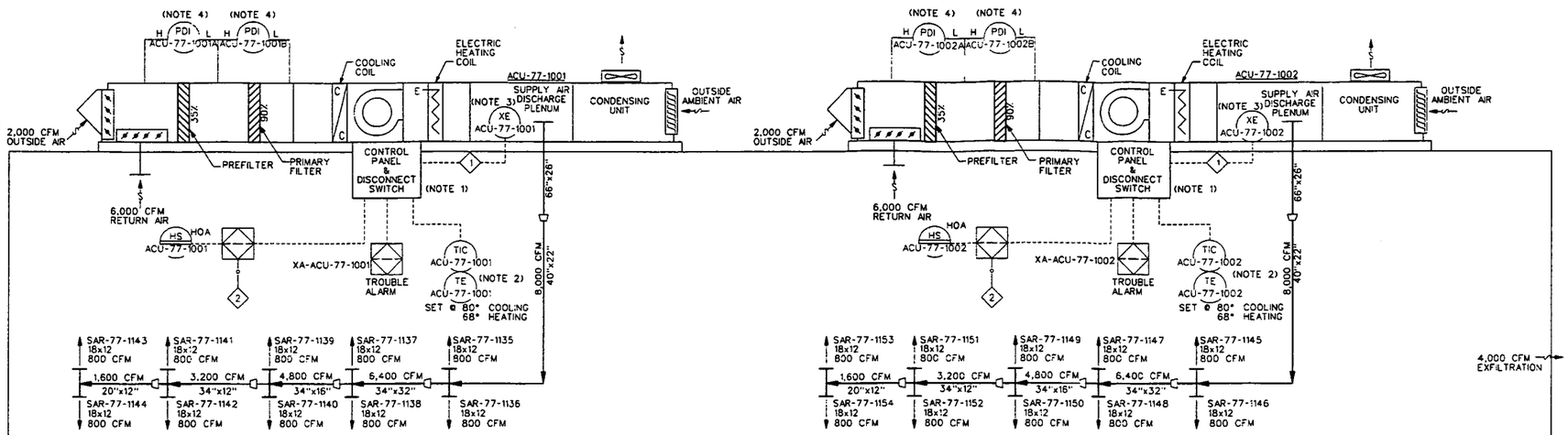

ACU-77-1001
AIR CONDITIONING UNIT
SUPPLY FAN
8,000 CFM @ 3" SP
10 HP
90KW HEAT

ACU-77-1002
AIR CONDITIONING UNIT
SUPPLY FAN
8,000 CFM @ 3" SP
10 HP
90KW HEAT

NOTES:

1. CONTROL PANEL, MOTOR STARTER/DISCONNECT SWITCH FURNISHED WITH AHU, MOUNTED AND PRE-WIRED. (REFERENCE CONSTRUCTION SPECIFICATION SECTION 15895.) SINGLE SOURCE POWER SUPPLY REQUIRED.
2. ROOM TEMPERATURE SENSORS FURNISHED WITH ACU. (REFERENCE CONSTRUCTION SPECIFICATION SECTION 15895.)
3. SMOKE DETECTOR FURNISHED, MOUNTED, & WIRED BY FIRE ALARM SYSTEM VENDOR.
4. PDI FURNISHED WITH AHU. (REFERENCE CONSTRUCTION SPECIFICATION SECTION 15895.)
5. FOR HVAC CONTROLS SEQUENCE OF OPERATION SEE SHEETS H0020 AND H0021.
6. FOR EQUIPMENT SIZES AND INFORMATION SEE EQUIPMENT SCHEDULES SHEET H0074 AND H0075.
7. FOR INSTRUMENTATION SYMBOLS AND LEGEND SEE SHEETS N0001 AND N0002.

INTERLOCKS:

1. ACU WILL SHUT DOWN ON SMOKE DETECTION. ALARM WILL BE POSTED IN THE CONTROL ROOM.
2. SHUT DOWN ACU ON SIGNAL TO PROCESS CONTROL SYSTEM FROM FIRE ALARM SYSTEM.

INFORMATION ONLY

REF DWG NO.	DRAWING TITLE
H0010	HVAC, GENERAL NOTES, SYSTEMS AND EQUIPMENT DESIGNATORS
H0011	HVAC, LEGEND SYMBOLS AND ABBREVIATIONS

Conforms to the Subcontract Requirements (13-Digit Contract - Incorporates and Supplies Requirements) Date 03-03-03

REV. NO.	ISSUE OR REVISION PURPOSE - DESCRIPTION	DATE	REV. BY	APPR.
0	ISSUED TO CONSTRUCTION	02/10/03		

INITIALS AND DATE

UNITED STATES DEPARTMENT OF ENERGY
FERNALD ENVIRONMENTAL MANAGEMENT PROJECT

THIS DRAWING PREPARED BY
JACOBS
135 Broadway Ave. Oak Ridge, Tennessee 37830 Tel: 865-220-8600 Fax: 865-220-6170

PROJECT NAME
SILOS 1 AND 2

DRAWING TITLE
HVAC
REMEDIATION FACILITY
EMPTY CONTAINER STAGING ROOM CONTROL DIAGRAM

DRAWN BY	DATE	TECHNICAL LEAD	DATE	CHECKED BY	DATE
	02/10/03		02/10/03		2/10/03

PLANT/BLDG. NO.	FLOOR	SCALE	CLASS
948	FIRST	NONE	U

SUBMITTED FOR 30% ISSUE	SUBMITTED FOR 60% ISSUE	SUBMITTED FOR 90% ISSUE
TECH LEAD	TECH LEAD	TECH LEAD
DATE	DATE	DATE

T.O. NUMBER	PROJECT NO.	DRAWING INDEX CODE NO.	SHEET NO.	REV. NO.
N/A	40750	94X-3900-H-01709	H0037	0
JEG PROJECT NO. 35H19603	FILENAME 94xh1709.DGN			

000083

DATE: 02/08/03
TIME: 05:45:38 PM
USER: BSlobek
DESIGN FILE: h:\hvac\drawings\controldiagrams\94xh1705.dgn

4822

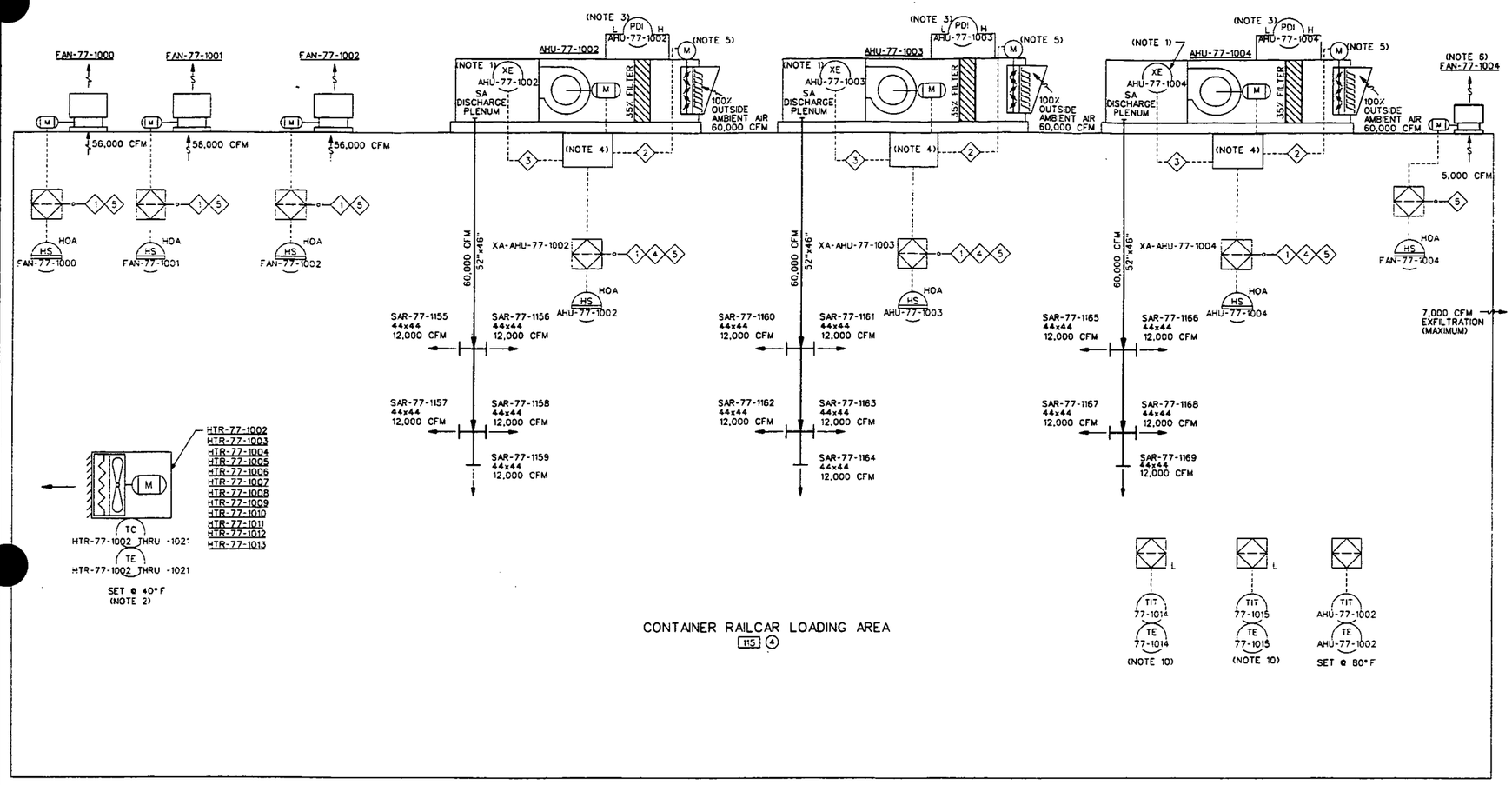

NOTES:

1. SMOKE DETECTOR FURNISHED, MOUNTED, AND WIRED BY FIRE DETECTION VENDOR.
2. TE, TC FURNISHED WITH UNIT HEATERS. (REFERENCE CONSTRUCTION SPECIFICATION SECTION 15895.)
3. PDI FURNISHED, MOUNTED WITH AHU. (REFERENCE CONSTRUCTION SPECIFICATION SECTION 15895.)
4. CONTROL PANEL, MOTOR STARTER/DISCONNECT SWITCH FURNISHED WITH AHU, MOUNTED AND PRE-WIRED. (REFERENCE CONSTRUCTION SPECIFICATION SECTION 15895.) SINGLE SOURCE POWER SUPPLY REQUIRED.
5. DAMPER MOTOR AND INTERLOCK PRE-WIRED.
6. EXHAUST FAN, FAN-77-1004, SHALL RUN CONTINUOUSLY, EXCEPT WHEN THE CASCADE HVAC SYSTEM IS IN THE BYPASS MODE, AND SHALL BE CONNECTED TO THE STAND-BY POWER SYSTEM.
7. FOR HVAC CONTROL SEQUENCE OF OPERATION SEE SHEET H0020 AND H0021.
8. FOR EQUIPMENT SIZES AND INFORMATION SEE EQUIPMENT SCHEDULES SHEET H0074 AND H0075.
9. FOR INSTRUMENTATION SYMBOLS AND LEGEND SEE SHEET N0001 AND N0002.
10. TEMPERATURE SENSORS LOCATED AT ROOF TRUSS LEVEL ON WEST AND EAST ENDS OF BUILDING. LOW TEMPERATURE ALARM SET POINT AT 35° F.

INTERLOCKS:

1. WHEN AHU SUPPLY FAN IS ENERGIZED, ASSOCIATED EXHAUST FAN IS ENERGIZED. AS AHU SUPPLY FANS ARE DE-ENERGIZED, ASSOCIATED EXHAUST FANS ARE DE-ENERGIZED.
2. WHEN AHU SUPPLY FAN IS ENERGIZED, DAMPER WILL OPEN. WHEN AHU SUPPLY FAN IS DE-ENERGIZED, DAMPER WILL CLOSE.
3. AHU SUPPLY FAN WILL SHUT DOWN ON SMOKE DETECTION. ALARM WILL BE POSTED IN CONTROL ROOM.
4. SHUT DOWN AHU ON SIGNAL TO PROCESS CONTROL SYSTEM FROM FIRE ALARM SYSTEM.
5. ALL AHU SUPPLY FANS AND EXHAUST FANS ARE DE-ENERGIZED WHEN REMEDIATION BUILDING CASCADE HVAC SYSTEM GOES INTO BYPASS MODE.

REF DWG NO.	DRAWING TITLE
H0010	HVAC, GENERAL NOTES, SYSTEMS AND EQUIPMENT DESIGNATORS
H0011	HVAC, LEGEND SYMBOLS AND ABBREVIATIONS

Conforms to the Subcontract Requirements U.S. Army Corps - Louisville and Pittsburgh Districts Date 03-03-03

REV. NO.	ISSUE OR REVISION PURPOSE - DESCRIPTION	DATE	REV. BY	APPR
0	ISSUED TO CONSTRUCTION	02/10/03		

INITIALS AND DATE

UNITED STATES DEPARTMENT OF ENERGY
FERNALD ENVIRONMENTAL MANAGEMENT PROJECT

THIS DRAWING PREPARED BY
JACOBS
125 Broadway Ave.
Oak Ridge, Tennessee 37830
Tel: 865-220-4600
Fax: 865-220-6170

PROJECT NAME
SILOS 1 AND 2

DRAWING TITLE
HVAC
REMEDIATION FACILITY
CONTAINER RAILCAR LOADING AREA CONTROL DIAGRAM

DRAWN BY	DATE	TECHNICAL LEAD	DATE	CHECKED BY	DATE
	02/03		2/10/03		2/11/03

PLANT/BLDG NO.	FLOOR	SCALE	CLASS
94B	FIRST	NONE	U

SUBMITTED FOR 30% ISSUE	SUBMITTED FOR 60% ISSUE	SUBMITTED FOR 90% ISSUE
TECH LEAD	TECH LEAD	TECH LEAD
DATE	DATE	DATE

T.O. NUMBER	PROJECT NO.	DRAWING INDEX CODE NO.	SHEET NO.	REV. NO.
N/A	40750	94X-3900-H-01710	H0038	0

JES PROJECT NO.	FILENAME
35H19603	94xh1710.DGN

FAN-77-1000	FAN-77-1001	FAN-77-1002	AHU-77-1002	AHU-77-1003	AHU-77-1004	FAN-77-1004
EXHAUST FAN 56,000 CFM @ 0.25" SP 10 HP	EXHAUST FAN 56,000 CFM @ 0.25" SP 10 HP	EXHAUST FAN 56,000 CFM @ 0.25" SP 10 HP	AIR HANDLING UNIT SUPPLY FAN 60,000 CFM @ 3" SP 50 HP	AIR HANDLING UNIT SUPPLY FAN 60,000 CFM @ 3" SP 50 HP	AIR HANDLING UNIT SUPPLY FAN 60,000 CFM @ 3" SP 50 HP	EXHAUST FAN 5,000 CFM @ 0.375"SP 1 HP

HTR-77-1002
HTR-77-1003
HTR-77-1004
HTR-77-1005
HTR-77-1006
HTR-77-1007
HTR-77-1008
HTR-77-1009
HTR-77-1010
HTR-77-1011
HTR-77-1012
HTR-77-1013

ELECTRIC UNIT HEATER
HORIZONTAL
1/15 HP 12.5 KW

INFORMATION ONLY

000084

DATE: 02/08/03
TIME: 05:46:39 PM
USER: BSicbeek
DESIGN FILE: k:\hvac\drawings\controldiagrams\94xh1710.dgn

4822

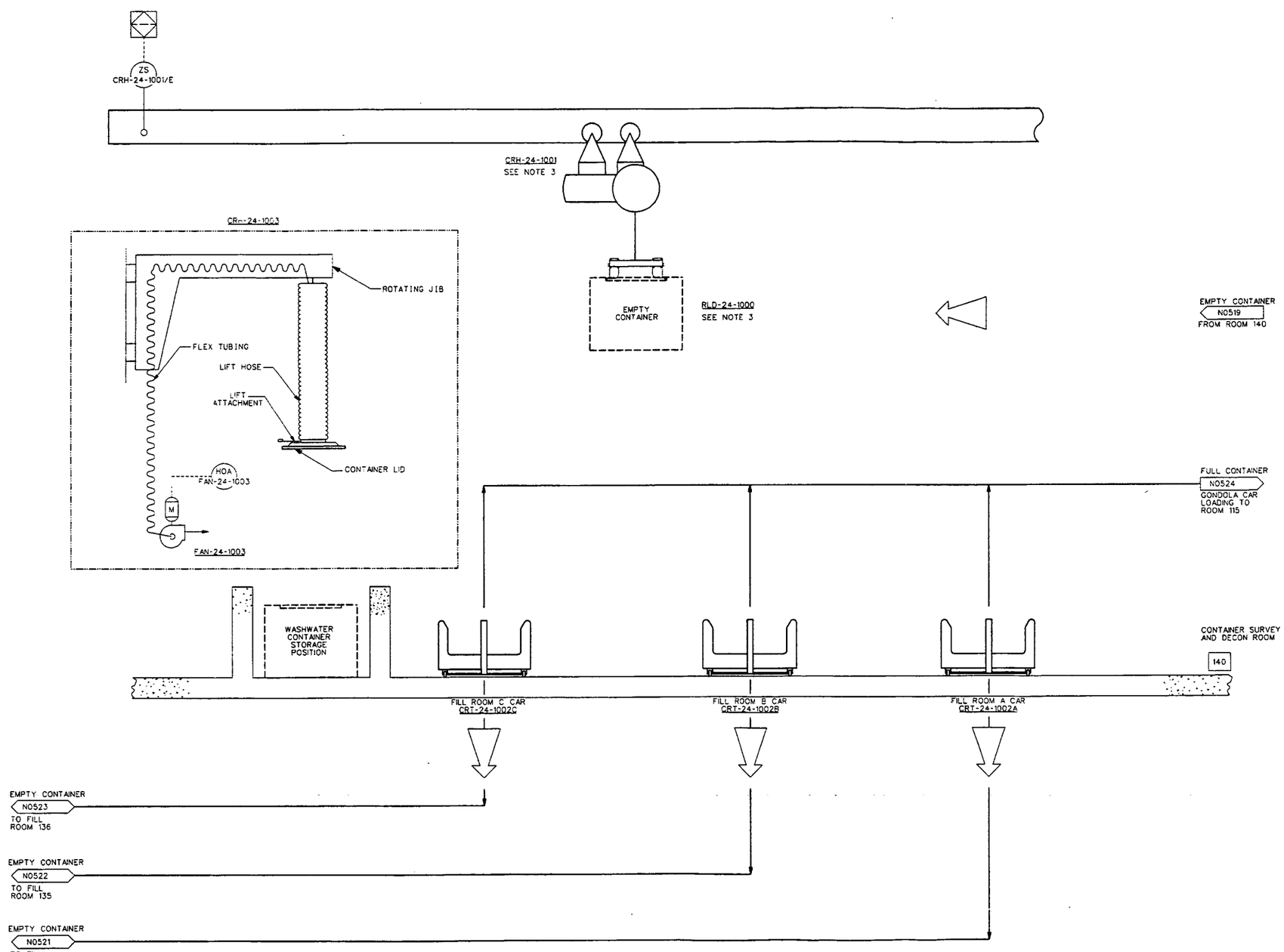

CRH-24-1001
CART LOADING MONORAIL
16 TON
SEE NOTE 3

CRH-24-1003
CONTAINER LID HOIST
200 LB

RLD-24-1000
CAR LOADING
CONTAINER GRAPPLE
12 TON
SEE NOTE 3

FAN-24-1003
VACUUM HOIST FAN
5 HP
480V, 3 PH

CRT-24-1002C
FILL ROOM C CAR
10.5 TON
30 FPM

CRT-24-1002B
FILL ROOM B CAR
10.5 TON
30 FPM

CRT-24-1002A
FILL ROOM A CAR
10.5 TON
30 FPM

NOTES:

1. FOR SEQUENCE OF EVENTS SEE SHEET F0504.
2. SEE SHEET N0700, N0701 AND N0702 FOR CONTAINER TRANSFER CARS.
3. SEE SHEET N0519 FOR MONORAIL AND GRAPPLE CONTROLS.
4. [XXX] BOXED NUMBERS REPRESENT ROOM NUMBERS. SEE GENERAL ARRANGEMENT DRAWING FOR ROOM LOCATIONS.

INTERLOCKS:

INFORMATION ONLY

REF DWG NO.	DRAWING TITLE
N0001	PIPING, VALVES AND MISCELLANEOUS
N0002	INSTRUMENTATION
N0003	EQUIPMENT AND MISCELLANEOUS

DATE 030303

REV. NO.	ISSUE OR REVISION PURPOSE - DESCRIPTION	DATE	REV. BY	APPR.
0	ISSUED TO CONSTRUCTION	02/10/03		

INITIALS AND DATE

UNITED STATES DEPARTMENT OF ENERGY
FERNALD ENVIRONMENTAL MANAGEMENT PROJECT

THIS DRAWING PREPARED BY

JE JACOBS
125 Broadway Ave.
Oak Ridge, Tennessee 37830
Tel: 865-220-4600
Fax: 865-220-6170

PROJECT NAME
SILOS 1 AND 2

DRAWING TITLE
INSTRUMENTATION
PIPING AND INSTRUMENT DIAGRAM
CONTAINER FILLING SYSTEM - SHEET 1 OF 13

DRAWN BY	DATE	TECHNICAL LEAD	DATE	CHECKED BY	DATE
	01/06		2/14/03		2/11/03

UNIT/BLDG. NO.	FLOOR	SCALE	CLASS
		NONE	U

SUBMITTED FOR 30% ISSUE	SUBMITTED FOR 60% ISSUE	SUBMITTED FOR 90% ISSUE
TECH LEAD	TECH LEAD	TECH LEAD
DATE	DATE	DATE

T.A. NUMBER	PROJECT NO.	DRAWING INDEX CODE NO.	SHEET NO.	REV. NO.
N/A	40750	94X-3900-N-01125	N0520	0

JE PROJECT NO.	FILENAME
35H19603	94XN1125.DGN

000085

DATE: 02/10/03 USER: BSlobbek

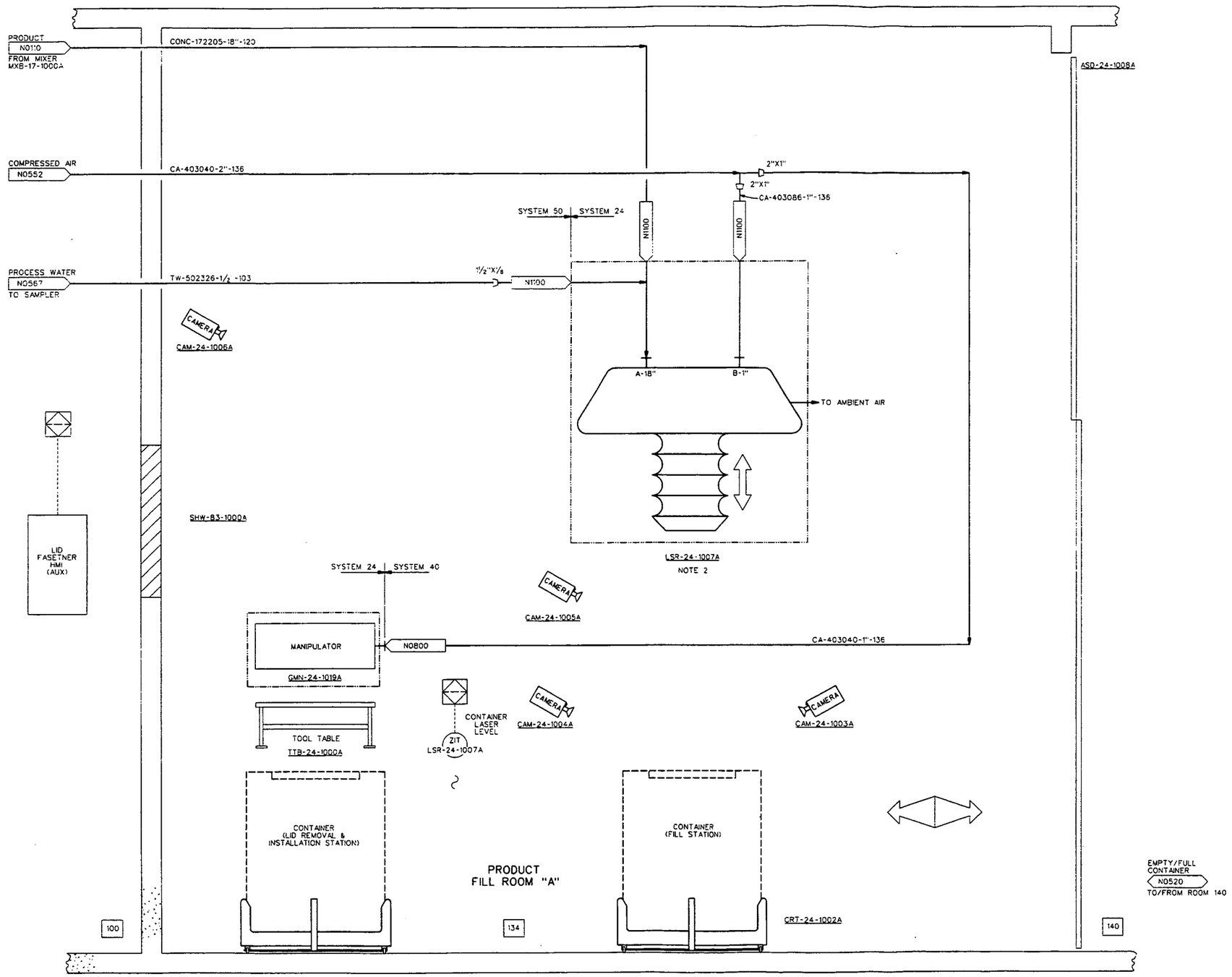

SHW-83-1000A FILL STATION A SHIELD WINDOW 3'-11" TALL X 4'-11" WIDE	CAM-24-1006A GANTRY CAMERA	GMN-24-1019A FILL ROOM A GANTRY MANIPULATOR 200 LB 7' X 10' X 2' X 360° WORKING ENVELOPE	TTB-24-1000A GANTRY TOOL TABLE A 65" W X 30" L X 35" H	CAM-24-1004A FILL STATION CAMERA
CAM-24-1005A FILL STATION CAMERA	LSR-24-1007A PRODUCT FILL CHUTE A 60,000 LB/HR 15" TRAVEL	CAM-24-1003A FILL STATION CAMERA	CRT-24-1002A FILL ROOM A CAR	ASD-24-1008A PRODUCT FILL ROOM A DOOR SEE NOTE 4

NOTES:

1. FOR SEQUENCE OF EVENTS SEE SHEET F0504.
2. SEE SHEET N1100 FOR PRODUCT FILL CHUTE.
3. SEE SHEET N0700 FOR CONTAINER TRANSFER CAR.
4. SEE SHEET N0700 FOR DOOR CONTROL DETAILS.
5. XXXX BOXED NUMBERS REPRESENT ROOM NUMBERS. SEE GENERAL ARRANGEMENT DRAWING FOR ROOM LOCATIONS.

INTERLOCKS:

INFORMATION ONLY

REF DWG NO.	DRAWING TITLE
N0001	PIPING, VALVES AND MISCELLANEOUS
N0002	INSTRUMENTATION
N0003	EQUIPMENT AND MISCELLANEOUS

REV. NO.	ISSUE OR REVISION PURPOSE - DESCRIPTION	DATE	REV. BY	APPR.
0	ISSUED TO CONSTRUCTION	02/10/03		

INITIALS AND DATE

UNITED STATES DEPARTMENT OF ENERGY
FERNALD ENVIRONMENTAL MANAGEMENT PROJECT

THIS DRAWING PREPARED BY
JACOBS
135 Broadway Ave.
Oak Ridge, Tennessee 37830
Tel: 865-220-4600
Fax: 865-220-6170

PROJECT NAME
SILOS 1 AND 2

DRAWING TITLE
INSTRUMENTATION
PIPING AND INSTRUMENT DIAGRAM
CONTAINER FILLING SYSTEM - SHEET 2 OF 13

DRAWN BY	DATE	TECHNICAL LEAD	DATE	CHECKED BY	DATE
	10/1/03		2/10/03		2/19/03

PLANT/BLDG. NO. | FLOOR | SCALE: NONE | CLASS: U

SUBMITTED FOR 30% ISSUE — TECH LEAD — DATE
SUBMITTED FOR 80% ISSUE — TECH LEAD — DATE
SUBMITTED FOR 100% ISSUE — TECH LEAD — DATE

T.O. NUMBER	PROJECT NO.	DRAWING INDEX CODE NO.	SHEET NO.	REV. NO.
N/A	40750	94X-3900-N-01126	N0521	0

JES PROJECT NO. 35H19603 — FILENAME 94X01126.DGN

DATE: 02/10/03 USER: 89kbb4k

4822

000086

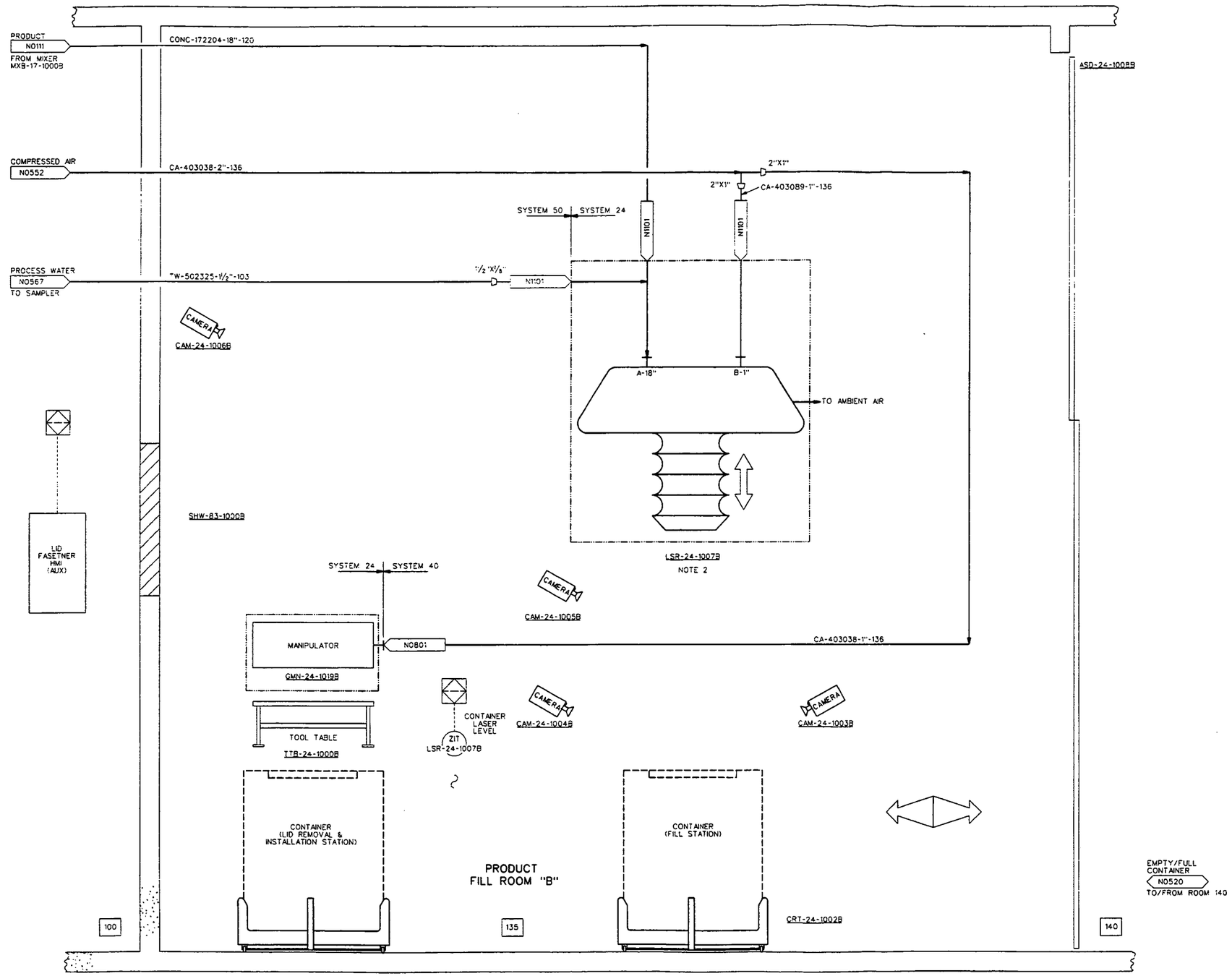

SHW-83-1000B FILL STATION B SHIELD WINDOW 3'-11" TALL X 4'-11" WIDE	CAM-24-1006B GANTRY CAMERA	GMN-24-1019B FILL ROOM B GANTRY MANIPULATOR 200 LB 7' X 10' X 2' X 360° WORKING ENVELOPE	TTB-24-1000B GANTRY TOOL TABLE B 65" W X 30" L X 35" H
CAM-24-1004B FILL STATION CAMERA	CAM-24-1005B FILL STATION CAMERA	LSR-24-1007B PRODUCT FILL CHUTE B 60,000 LB/HR 16" TRAVEL	CAM-24-1003B FILL STATION CAMERA
CRT-24-1002B FILL ROOM B CAR	ASD-24-1008B PRODUCT FILL ROOM B DOOR SEE NOTE 4		

NOTES:

1. FOR SEQUENCE OF EVENTS SEE SHEET F0504.
2. SEE SHEET N1101 FOR PRODUCT FILL CHUTE.
3. SEE SHEET N0701 FOR CONTAINER TRANSFER CAR.
4. SEE SHEET N0701 FOR DOOR CONTROL DETAILS
5. XXX BOXED NUMBERS REPRESENT ROOM NUMBERS SEE GENERAL ARRANGEMENT DRAWING FOR ROOM LOCATIONS.

INTERLOCKS:

INFORMATION ONLY

REF DWG NO.	DRAWING TITLE
N0001	PIPING, VALVES AND MISCELLANEOUS
N0002	INSTRUMENTATION
N0003	EQUIPMENT AND MISCELLANEOUS

03-03-03

REV. NO.	ISSUE OR REVISION PURPOSE - DESCRIPTION	DATE	REV. BY	APPR.
0	ISSUED TO CONSTRUCTION	02/10/03		

INITIALS AND DATE

UNITED STATES DEPARTMENT OF ENERGY
FERNALD ENVIRONMENTAL MANAGEMENT PROJECT

THIS DRAWING PREPARED BY
JACOBS
125 Broadway Ave.
Oak Ridge, Tennessee 37830
Tel: 865-220-1400
Fax: 865-220-6170

PROJECT NAME
SILOS 1 AND 2

DRAWING TITLE
INSTRUMENTATION
PIPING AND INSTRUMENT DIAGRAM
CONTAINER FILLING SYSTEM - SHEET 3 OF 13

DRAWN BY	DATE	TECHNICAL LEAD	DATE	CHECKED BY	DATE
	2/10/03		2/10/03		2/10/03
PLANT/BLDG. NO.		FLOOR		SCALE: NONE	CLASS: U

SUBMITTED FOR 30% ISSUE	SUBMITTED FOR 60% ISSUE	SUBMITTED FOR 90% ISSUE
TECH LEAD	TECH LEAD	TECH LEAD
DATE	DATE	DATE

T.O. NUMBER	PROJECT NO.	DRAWING INDEX CODE NO.	SHEET NO.	REV. NO.
N/A	40750	94X-3900-N-01127	N0522	0
JCS PROJECT NO. 35H19603	FILENAME 94XN1127.DGN			

4822

000087

DATE: 02/10/03 USER: BSlobbek

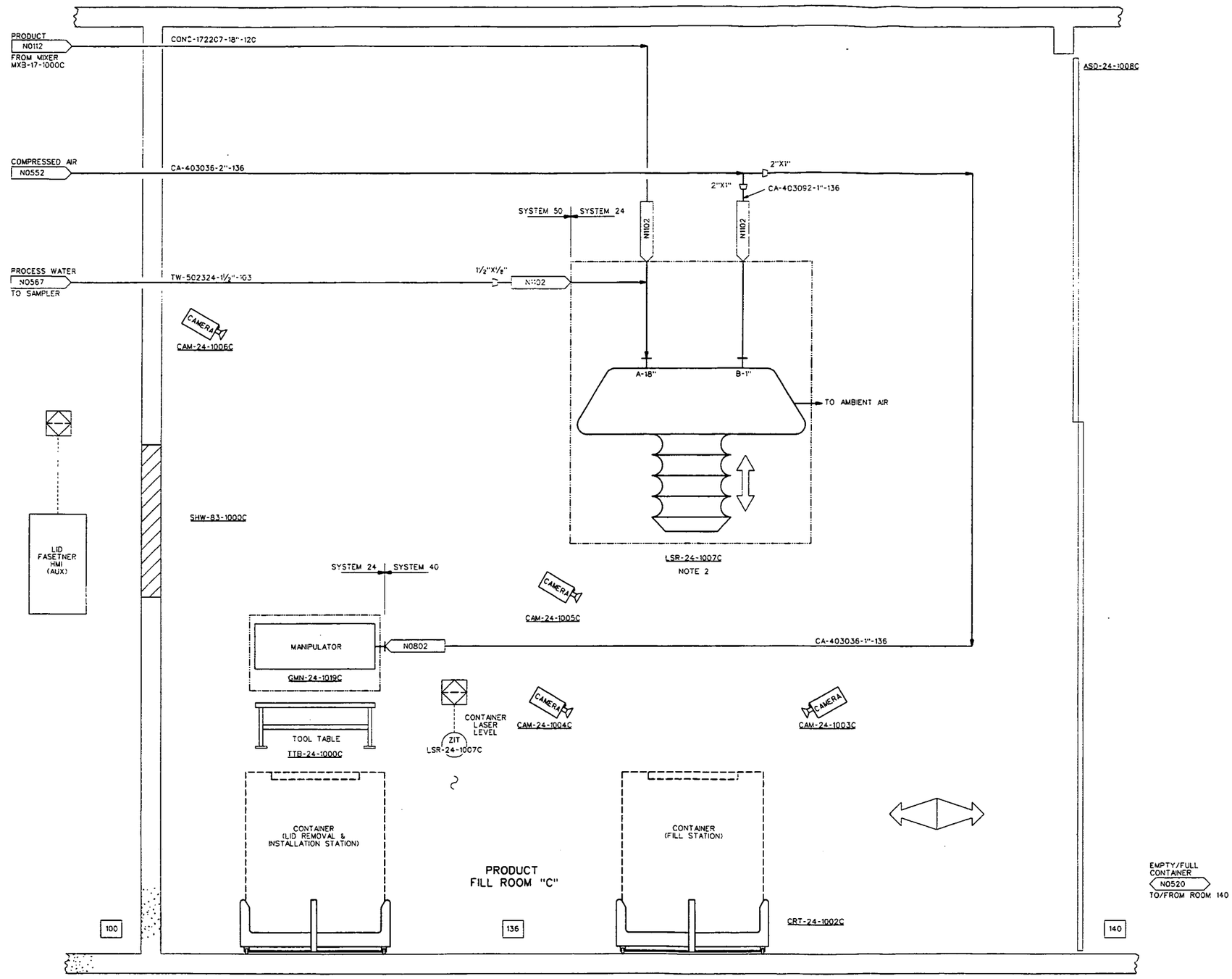

SHW-83-1000C	CAM-24-1006C	GMN-24-1019C	TTB-24-1000C	CAM-24-1004C
FILL STATION C SHIELD WINDOW 3'-11" TALL X 4'-11" WIDE	GANTRY CAMERA	FILL ROOM C GANTRY MANIPULATOR 200 LB 7' X 10' X 2' X 360° WORKING ENVELOPE	GANTRY TOOL TABLE C 65" W X 30" L X 35" H	FILL STATION CAMERA

CAM-24-1005C	LSR-24-1007C	CAM-24-1003C	CRT-24-1002C	ASD-24-1008C
FILL STATION CAMERA	PRODUCT FILL CHUTE C 60,000 LB/HR 16" TRAVEL	FILL STATION CAMERA	FILL ROOM C CAR	PRODUCT FILL ROOM C DOOR SEE NOTE 4

NOTES:

1. FOR SEQUENCE OF EVENTS SEE SHEET F0504.
2. SEE SHEET N1102 FOR PRODUCT FILL CHUTE.
3. SEE SHEET N0702 FOR CONTAINER TRANSFER CAR
4. SEE SHEET N0702 FOR DOOR CONTROL DETAILS
5. XXX BOXED NUMBERS REPRESENT ROOM NUMBERS SEE GENERAL ARRANGEMENT DRAWING FOR ROOM LOCATIONS.

INTERLOCKS:

INFORMATION ONLY

REF DWG NO.	DRAWING TITLE
N0001	PIPING, VALVES AND MISCELLANEOUS
N0002	INSTRUMENTATION
N0003	EQUIPMENT AND MISCELLANEOUS

REV. NO.	ISSUE OR REVISION PURPOSE - DESCRIPTION	DATE	REV BY	APPR.
0	ISSUED TO CONSTRUCTION	02/10/03		

INITIALS AND DATE

UNITED STATES DEPARTMENT OF ENERGY
FERNALD ENVIRONMENTAL MANAGEMENT PROJECT

THIS DRAWING PREPARED BY
JACOBS
135 Broadway Ave.
Oak Ridge, Tennessee 37830
Tel: 865-220-4800
Fax: 865-220-6170

PROJECT NAME
SILOS 1 AND 2

DRAWING TITLE
INSTRUMENTATION
PIPING AND INSTRUMENT DIAGRAM
CONTAINER FILLING SYSTEM - SHEET 4 OF 13

DRAWN BY — DATE 10/10/02 — TECHNICAL LEAD — DATE 2/10/03 — CHECKED BY — DATE 2/10/03
PLANT/BLDG. NO. — FLOOR — SCALE NONE — CLASS U
SUBMITTED FOR 30% ISSUE — TECH LEAD — DATE
SUBMITTED FOR 90% ISSUE — TECH LEAD — DATE
SUBMITTED FOR 100% ISSUE — TECH LEAD — DATE

T.O. NUMBER	PROJECT NO.	DRAWING INDEX CODE NO.	SHEET NO.	REV. NO.
N/A	40750	94X-3900-N-01128	N0523	0

JEC PROJECT NO. 35H19603 — FILENAME 94XN112I.DGN

DATE: 02/10/03
TIME: 09:04:55 PM
USER: BSobbek
DESIGN FILE: I:\proc\mechanical\drawings\94xn028.dgn

4822

000088

4822

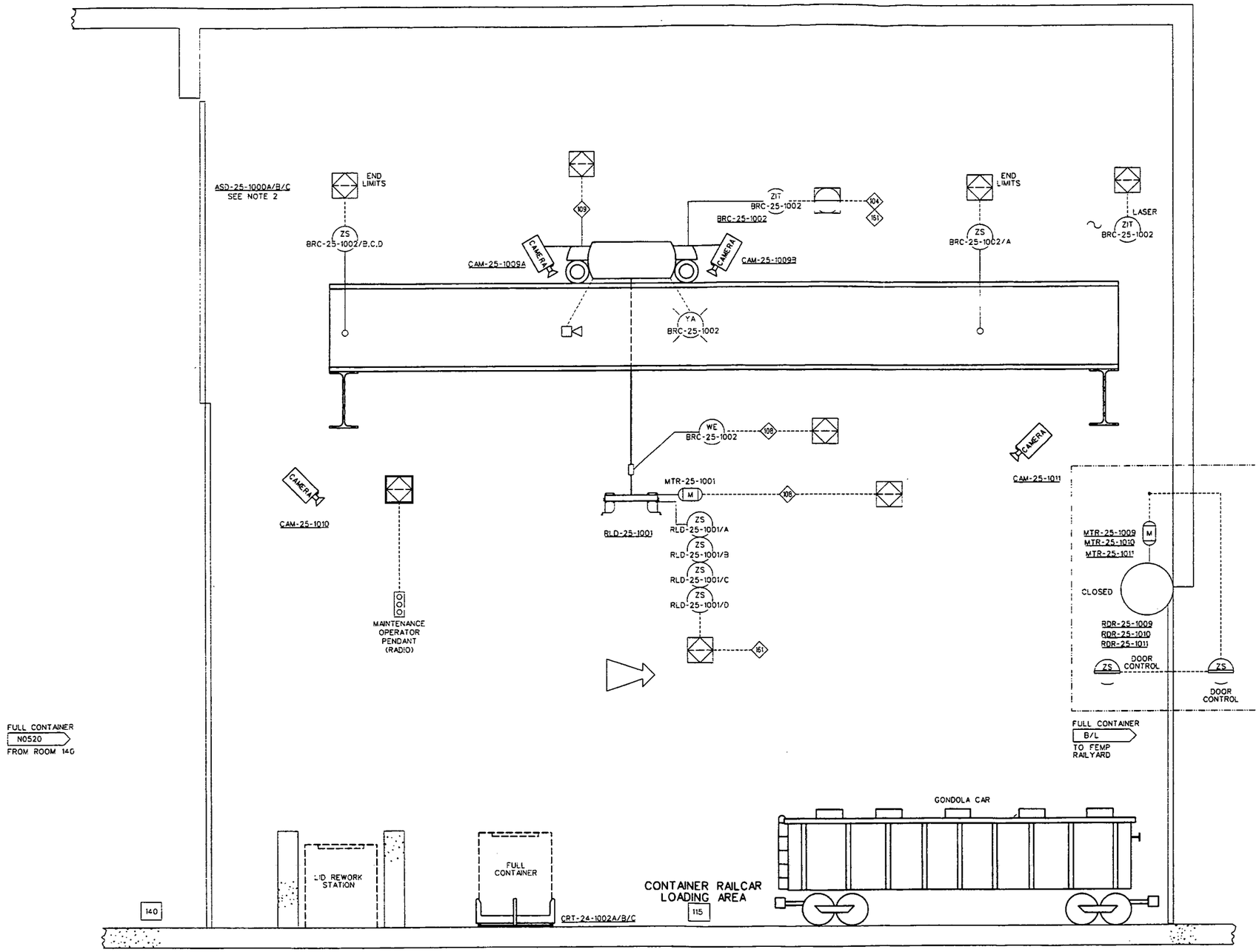

ASD-25-1000A/B/C	CAM-25-1010	CRT-24-1002A/B/C	CAM-25-1009A	CAM-25-1009B	BRC-25-1002	MTR-25-1001	RLD-25-1001	CAM-25-1011	RDR-25-1009	RDR-25-1010	RDR-25-1011	MTR-25-1009	MTR-25-1010	MTR-25-1011
SHIPPING AREA DOOR SEE NOTE 2	SHIPPING AREA SURVEILLANCE CAMERA A	FILL ROOM A/B/C/ CAR	BRIDGE CRANE ALIGNMENT CAMERA A	BRIDGE CRANE ALIGNMENT CAMERA B	CONTAINER SHIPPING CRANE 15 TON 72'-10" SPAN 196' LENGTH 26' LIFT 25 HP TOTAL 480V, 3 PH	¼ HP 115V, 1 PH	CONTAINER SHIPPING GRAPPLE 12 TON	SHIPPING AREA SURVEILLANCE CAMERA B	ROLL UP DOOR NO. 107	ROLL UP DOOR NO. 106	ROLL UP DOOR NO. 105	1 HP 480V, 3PH	1 HP 480V, 3PH	1 HP 480V, 3PH

NOTES:

1. FOR SEQUENCE OF EVENTS SEE SHEET F0505.
2. SEE SHEET N0700, N0701, & N0702 FOR DOOR CONTROL DETAILS.
3. XXX BOXED NUMBERS REPRESENT ROOM NUMBERS. SEE GENERAL ARRANGEMENT DRAWING FOR ROOM LOCATIONS.

INTERLOCKS:

104 CRANE ABOVE SET POINT BEFORE TRAVERSE.

108 DO NOT OPEN GRAPPLE UNLESS BRC-25-1002 INDICATES LESS THAN 50 LBS.

109 LIGHTS AND HORN WILL ACTIVATE 5 SECONDS BEFORE BRIDGE CRANE MOTION BEGINS.

161 CONFIRM GRAPPLE PINS ARE ALL ENGAGED OR ALL DISENGAGED.

INFORMATION ONLY

REF DWG NO.	DRAWING TITLE
N0001	PIPING, VALVES AND MISCELLANEOUS
N0002	INSTRUMENTATION
N0003	EQUIPMENT AND MISCELLANEOUS

REV. NO.	ISSUE OR REVISION PURPOSE - DESCRIPTION	DATE	REV BY	APPR.
0	ISSUED TO CONSTRUCTION	02/10/03		

INITIALS AND DATE

UNITED STATES DEPARTMENT OF ENERGY
FERNALD ENVIRONMENTAL MANAGEMENT PROJECT

THIS DRAWING PREPARED BY
JACOBS

PROJECT NAME
SILOS 1 AND 2

DRAWING TITLE
INSTRUMENTATION
PIPING AND INSTRUMENT DIAGRAM
CONTAINER SHIPPING SYSTEM

DRAWN BY	DATE	TECHNICAL LEAD	DATE	CHECKED BY	DATE
	12/1/02		2/10/03		2/10/03

PLANT/BLDG. NO. — FLOOR — SCALE: NONE — CLASS: U

SUBMITTED FOR 30% ISSUE — TECH LEAD — DATE
SUBMITTED FOR 60% ISSUE — TECH LEAD — DATE
SUBMITTED FOR 90% ISSUE — TECH LEAD — DATE

T.O. NUMBER	PROJECT NO.	DRAWING INDEX CODE NO.	SHEET NO.	REV. NO.
N/A	40750	94X-3900-N-01129	N0524	0

JEG PROJECT NO. 35H19603 — FILENAME 94XN1129.DGN

DATE: 02/10/03 USER: BSCobbek

000089

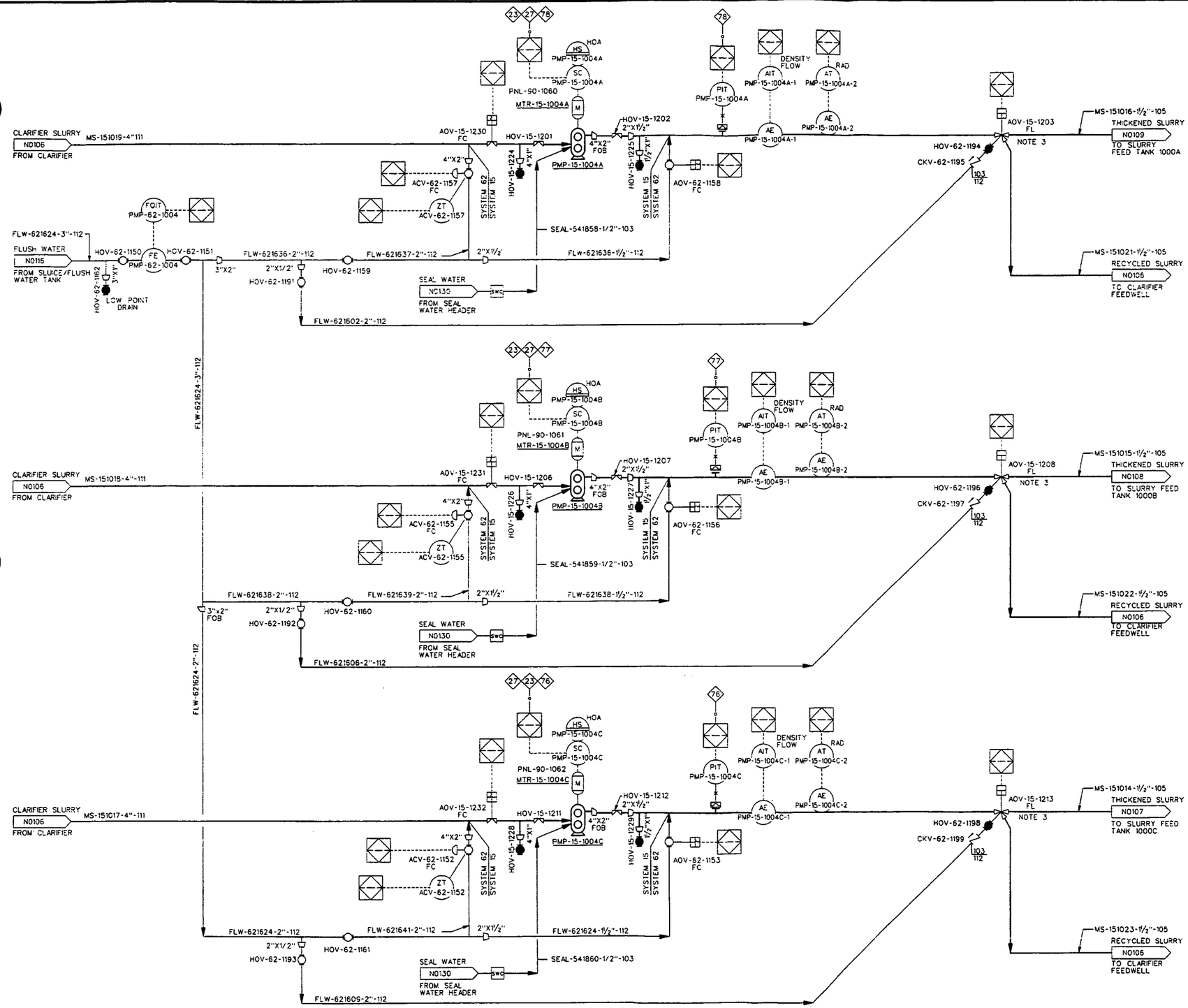

NOTES:

1. AUXILIARY LOCATED CONTROLS ON THIS SHEET ARE LOCATED ON PANEL PNL-90-1008 UNLESS OTHERWISE NOTED .
2. SEE SHEET N0002 FOR TYPICAL AOV CONFIGURATIONS.
3. SEE VALVE CONFIGURATION #2 SHEET N0002.

INFORMATION ONLY

INTERLOCKS:

- (23) LOW LEVEL SHUT DOWN PUMP
- (76) HIGH HIGH PRESSURE SHUTDOWN SEQUENCE FOR PUMP
- (77) HIGH HIGH PRESSURE SHUTDOWN SEQUENCE FOR PUMP
- (78) HIGH HIGH PRESSURE SHUTDOWN SEQUENCE FOR PUMP
- (27) HIGH LEVEL SHUTS DOWN SEQUENCE FOR PUMPS. (PUMP IN QUESTION IS DETERMINED BY VALVE LINE UP).

REF DWG NO.	DRAWING TITLE
N0001	PIPING, VALVES AND MISCELLANEOUS
N0002	INSTRUMENTATION
N0003	EQUIPMENT AND MISCELLANEOUS

REV. NO.	ISSUE OR REVISION PURPOSE - DESCRIPTION	DATE	REV. BY	APPR.
0	ISSUED TO CONSTRUCTION	02/10/03	GES	GES

INITIALS AND DATE

UNITED STATES DEPARTMENT OF ENERGY
FERNALD ENVIRONMENTAL MANAGEMENT PROJECT

THIS DRAWING PREPARED BY
JACOBS

PROJECT NAME
SILOS 1 AND 2

DRAWING TITLE
INSTRUMENTATION
PIPING AND INSTRUMENT DIAGRAM
CLARIFIER UNDERFLOW PUMP SYSTEMS

DRAWN BY	DATE	TECHNICAL LEAD	DATE	CHECKED BY	DATE
	2/10/03		2/10/03		2/10/03

PLANT/BLDG. NO.	FLOOR	SCALE	CLASS
		NTS	U

SUBMITTED FOR 30% ISSUE — TECH LEAD — DATE
SUBMITTED FOR 60% ISSUE — TECH LEAD — DATE
SUBMITTED FOR 90% ISSUE — TECH LEAD — DATE

T.O. NUMBER	PROJECT NO.	DRAWING INDEX CODE NO.	SHEET NO.	REV. NO.
N/A	40750	94X-3900-N-01164	N0127	0

JES PROJECT NO.	FILENAME
35H19603	94XN1164.DGN

DATE: 02/09/03 USER: KenyMA

4822

000090

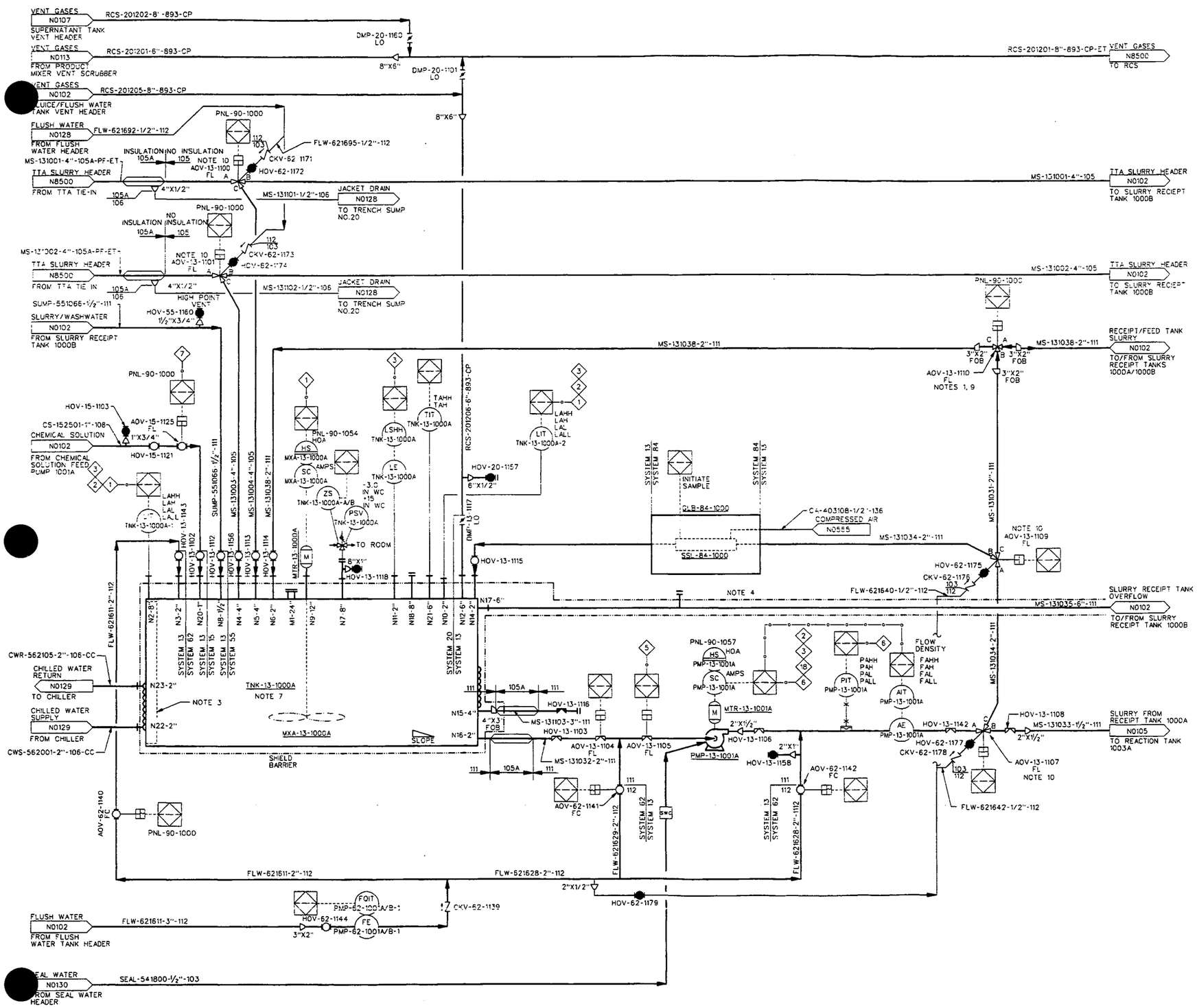

TNK-13-1000A
SLURRY RECEIPT TANK A 83,800 GAL 23' DIA. 27' HT

MXA-13-1000A
SLURRY RECEIPT TANK MIXER A
MTR-13-1000A
MXA-13-1000A MOTOR 125 HP

PMP-13-1001A
SLURRY RECEIPT TANK PUMP A 80 GPM @ 140 PSIG
MTR-13-1001A
PMP-13-1001A MOTOR 40 HP

SSL-84-1000
SLURRY SAMPLER FOR TNK-13-1000A

GLB-84-1000
SLURRY RECEIPT TANK A GLOVEBOX

NOTES:

1. ALL 3-WAY BALL VALVES ON SLURRY LINES WILL BE ONE PIPE DIAMETER LARGER TO MINIMIZE EROSION (I.E., 2-INCH LINES WILL HAVE 3-INCH 3-WAY VALVES)
2. PINCH VALVES WILL NOT BE OVERSIZED.
3. TANK CONTAINS 4 BAFFLES TO ENHANCE MIXING.
4. OVERFLOW LINES ARE LOCATED INSIDE THE SHIELD ENCLOSURE.
5. DELETED
6. AUXILIARY LOCATED CONTROLS ON THIS SHEET ARE LOCATED ON PANEL PNL-90-1003 UNLESS NOTED OTHERWISE.
7. ALL HOV BALL VALVES ON TNK-13-1000A TO BE LOCKED OPEN.
8. SEE SHEET N0002 FOR TYPICAL AOV CONFIGURATIONS.
9. SEE VALVE CONFIGURATION #4 SHEET N0002.
10. SEE VALVE CONFIGURATION #2 SHEET N0002

INFORMATION ONLY

INTERLOCKS:

1. LOW-LOW LEVEL SHUT DOWN MIXER
2. LOW LEVEL SHUT DOWN PUMP
3. HIGH LEVEL SHUT DOWN SEQUENCE FOR PUMPS (PUMP IN QUESTION IS DETERMINED BY VALVE LINE UP)
5. VALVE SHALL BE CLOSED WHEN PUMP IS NOT OPERATING TO PREVENT REVERSE FLOW
6. HIGH HIGH PRESSURE SHUTDOWN SEQUENCE FOR PUMP
7. HIGH OR LOW PRESSURE SHUTS DOWN PUMP PMP-15-1001A AND CLOSES VALVES
18. HIGH HIGH LEVEL SHUTDOWN SEQUENCE FOR PUMPS (PUMPS IN QUESTION ARE DETERMINED BY VALVE LINE UP)

REF DWG NO.	DRAWING TITLE
N0001	PIPING, VALVES AND MISCELLANEOUS
N0002	INSTRUMENTATION
N0003	EQUIPMENT AND MISCELLANEOUS

REV. NO.	ISSUE OR REVISION PURPOSE - DESCRIPTION	DATE	REV. BY	APPR.
0	ISSUED TO CONSTRUCTION	02/10/03		

INITIALS AND DATE

UNITED STATES DEPARTMENT OF ENERGY
FERNALD ENVIRONMENTAL MANAGEMENT PROJECT

THIS DRAWING PREPARED BY
JACOBS

PROJECT NAME
SILOS 1 AND 2

DRAWING TITLE
INSTRUMENTATION
PIPING AND INSTRUMENT DIAGRAM
SLURRY RECEIPT TANK A

DRAWN BY	DATE	TECHNICAL LEAD	DATE	CHECKED BY	DATE
M. T. [illegible]	02/10/03	[illegible]	2/10/03	[illegible]	2/10/03

PLANT/BLDG. NO.	FLOOR	SCALE	CLASS
		NTS	U

SUBMITTED FOR 30% ISSUE	SUBMITTED FOR 60% ISSUE	SUBMITTED FOR 90% ISSUE
TECH LEAD	TECH LEAD	TECH LEAD
DATE	DATE	DATE

T.O. NUMBER	PROJECT NO.	DRAWING INDEX CODE NO.	SHEET NO.	REV. NO.
N/A	40750	94X-3900-N-01165	N0101	0

J.O. PROJECT NO.	FILENAME
35H19603	94XN165.dgn

DATE: 02/19/03 , USER: kenzma

4822

000091

4822

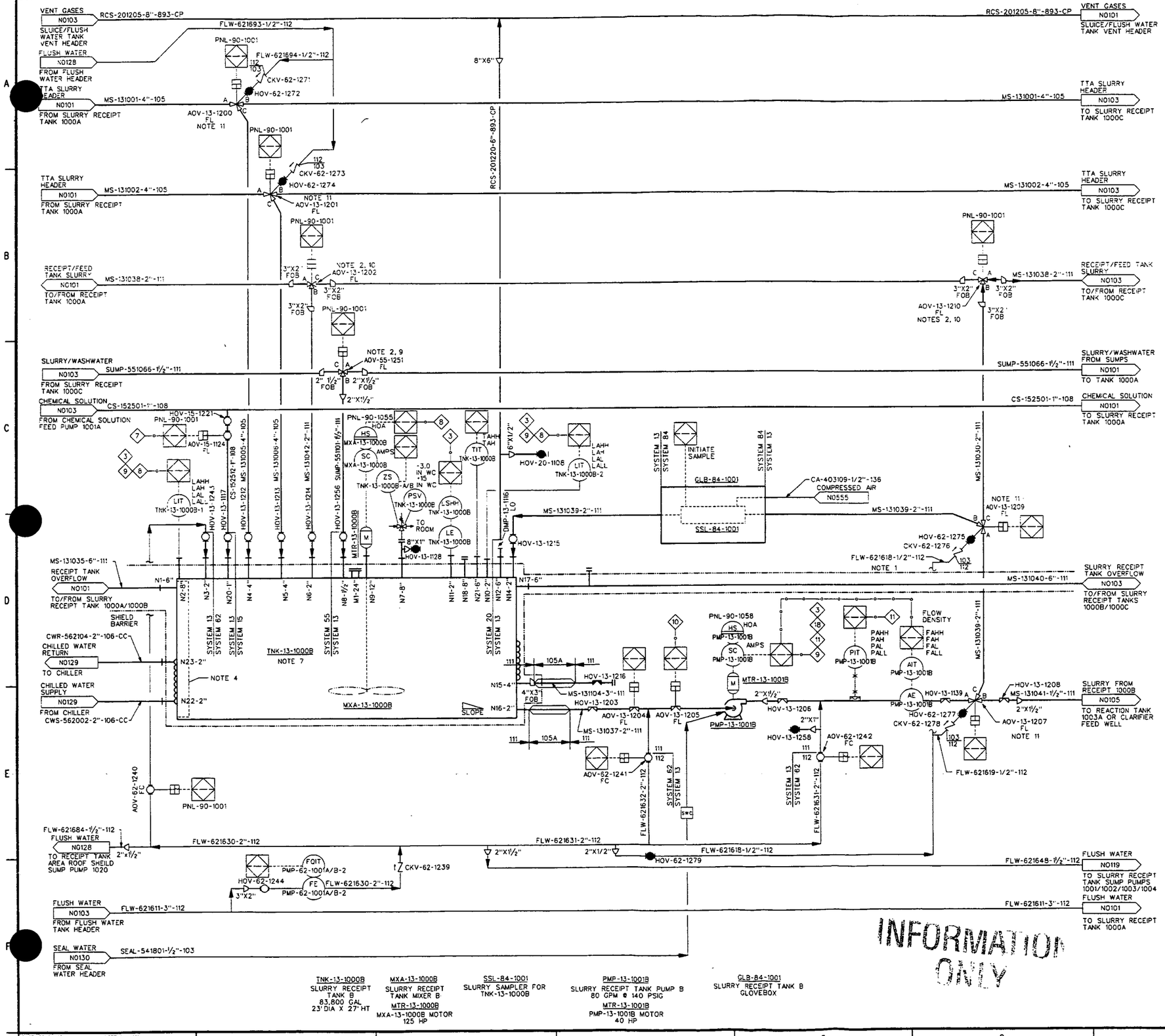

NOTES:

1. OVERFLOW LINES ARE LOCATED INSIDE THE SHIELD ENCLOSURE.
2. ALL 3-WAY BALL VALVES ON SLURRY LINES WILL BE ONE PIPE DIAMETER LARGER TO MINIMIZE EROSION (I.E., 2-INCH LINES WILL HAVE 3-INCH 3-WAY VALVES).
3. PINCH VALVES WILL NOT BE OVERSIZED.
4. TANK CONTAINS 4 BAFFLES TO ENHANCE MIXING.
5. DELETED
6. AUXILIARY LOCATED CONTROLS ON THIS SHEET ARE LOCATED ON PANEL PNL-90-1004 UNLESS NOTED OTHERWISE.
7. ALL HOV BALL VALVES ON TNK-13-1000B TO BE LOCKED OPEN.
8. SEE SHEET N0002 FOR TYPICAL AOV CONFIGURATIONS.
9. SEE VALVE CONFIGURATION #3 SHEET N0002.
10. SEE VALVE CONFIGURATION #4 SHEET N0002.
11. SEE VALVE CONFIGURATION #2 SHEET N0002.

INTERLOCKS:

- 3 HIGH LEVEL SHUT DOWN SEQUENCE FOR PUMPS (PUMP IN QUESTION IS DETERMINED BY VALVE LINE UP)
- 7 HIGH OR LOW PRESSURE SHUTS DOWN PUMP PMP-15-1001A AND CLOSES VALVES
- 8 LOW-LOW LEVEL SHUT DOWN MIXER
- 9 LOW LEVEL SHUT DOWN PUMP
- 10 VALVE SHALL BE CLOSED WHEN PUMP IS NOT OPERATING TO PREVENT REVERSE FLOW.
- 11 HIGH HIGH OR LOW PRESSURE SHUTDOWN SEQUENCE FOR PUMP
- 18 HIGH HIGH LEVEL SHUTDOWN SEQUENCE FOR PUMPS (PUMPS IN QUESTION ARE DETERMINED BY VALVE LINE UP)

REF DWG NO.	DRAWING TITLE
N0001	PIPING, VALVES AND MISCELLANEOUS
N0002	INSTRUMENTATION
N0003	EQUIPMENT AND MISCELLANEOUS

REV. NO.	ISSUE OR REVISION PURPOSE - DESCRIPTION	DATE	REV. BY	APPR.
0	ISSUED TO CONSTRUCTION	02/10/03	SJC	GCS

INITIALS AND DATE

UNITED STATES DEPARTMENT OF ENERGY
FERNALD ENVIRONMENTAL MANAGEMENT PROJECT

THIS DRAWING PREPARED BY
JACOBS

PROJECT NAME: SILOS 1 AND 2

DRAWING TITLE
INSTRUMENTATION
PIPING AND INSTRUMENT DIAGRAM
SLURRY RECEIPT TANK B

DRAWN BY	DATE	TECHNICAL LEAD	DATE	CHECKED BY	DATE
M. Fuller	2/10/03	M. B. Fuller	2/10/03	S. L. Cox	2/10/03

PLANT/BLDG. NO.	FLOOR	SCALE	CLASS
		NTS	U

SUBMITTED FOR 30% ISSUE — TECH LEAD — DATE
SUBMITTED FOR 60% ISSUE — TECH LEAD — DATE
SUBMITTED FOR 90% ISSUE — TECH LEAD — DATE

T.O. NUMBER	PROJECT NO.	DRAWING INDEX CODE NO.	SHEET NO.	REV. NO.
N/A	40750	94X-3900-N-01166	N0102	0

JEG PROJECT NO. 35H19603 — FILENAME 94XN1166.DGN

000092

DATE: 02/05/03 — USER: KentMA

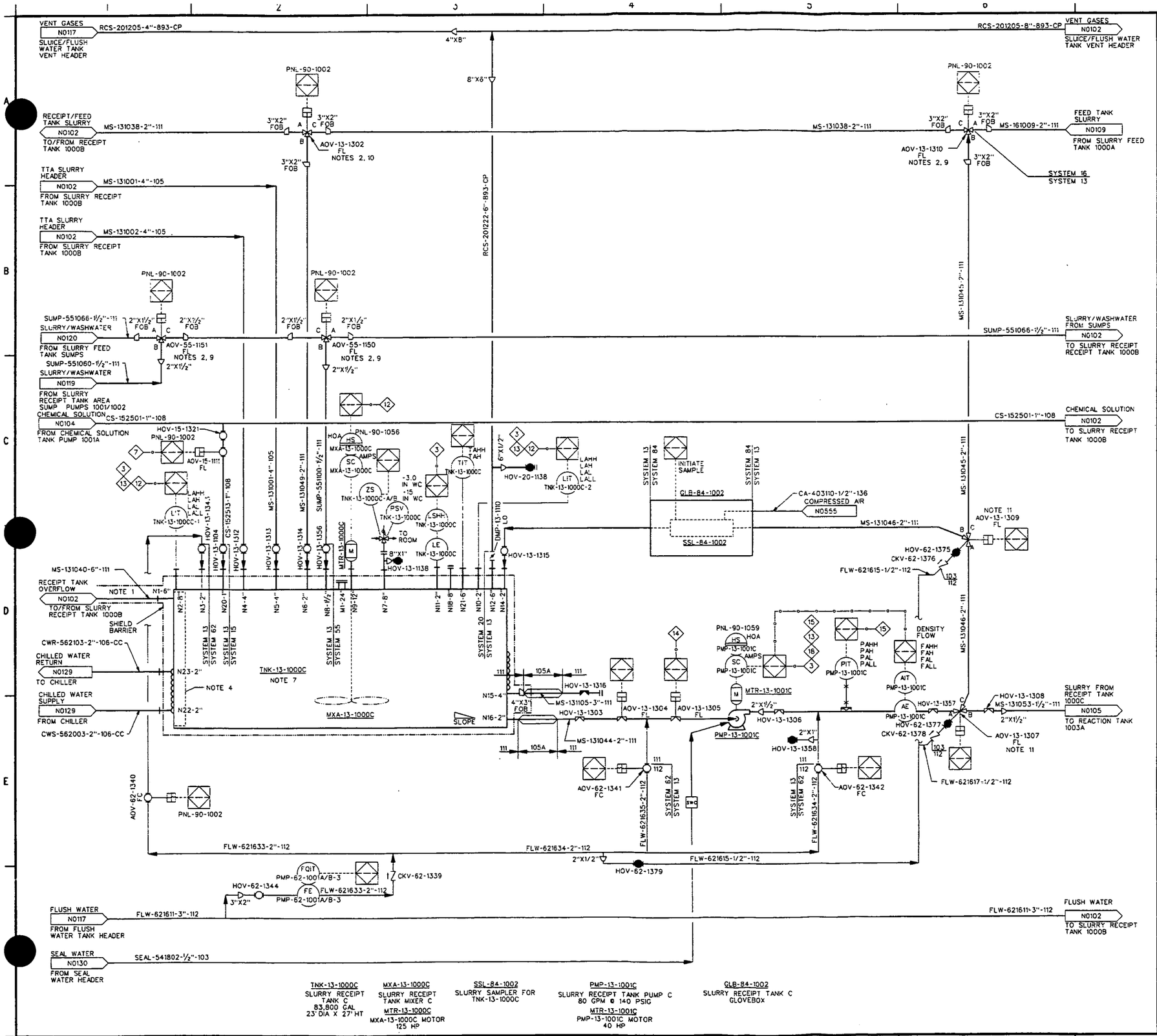

TNK-13-1000C
SLURRY RECEIPT TANK C
83,800 GAL
23' DIA X 27' HT

MXA-13-1000C
SLURRY RECEIPT TANK MIXER C
MTR-13-1000C
MXA-13-1000C MOTOR
125 HP

SSL-84-1002
SLURRY SAMPLER FOR TNK-13-1000C

PMP-13-1001C
SLURRY RECEIPT TANK PUMP C
80 GPM @ 140 PSIG
MTR-13-1001C
PMP-13-1001C MOTOR
40 HP

GLB-84-1002
SLURRY RECEIPT TANK C
GLOVEBOX

NOTES:

1. OVERFLOW LINES ARE LOCATED INSIDE THE SHIELD ENCLOSURE.
2. ALL 3-WAY BALL VALVES ON SLURRY LINES WILL BE ONE PIPE DIAMETER LARGER TO MINIMIZE EROSION (I.E., 2-INCH LINES WILL HAVE 3-INCH 3-WAY VALVES).
3. PINCH VALVES WILL NOT BE OVERSIZED.
4. TANK CONTAINS 4 BAFFLES TO ENHANCE MIXING
5. DELETED
6. AUXILIARY LOCATED CONTROLS ON THIS SHEET ARE LOCATED ON PANEL PNL-90-1005 UNLESS NOTED OTHERWISE.
7. ALL HOV BALL VALVES ON TNK-13-1000C TO BE LOCKED OPEN.
8. SEE SHEET N0002 FOR TYPICAL AOV CONFIGURATIONS.
9. SEE VALVE CONFIGURATION #3 SHEET N0002.
10. SEE VALVE CONFIGURATION #4 SHEET N0002.
11. SEE VALVE CONFIGURATION #2 SHEET N0002.

INFORMATION ONLY

INTERLOCKS:

3. HIGH LEVEL SHUT DOWN SEQUENCE FOR PUMPS (PUMP IN QUESTION IS DETERMINED BY VALVE LINE UP)
7. HIGH OR LOW PRESSURE SHUTS DOWN PUMP PMP-15-1001A AND CLOSES VALVES
12. LOW-LOW LEVEL SHUT DOWN MIXER
13. LOW LEVEL SHUT DOWN PUMP
14. VALVE SHALL BE CLOSED WHEN PUMP IS NOT OPERATING TO PREVENT REVERSE FLOW.
15. HIGH HIGH OR LOW PRESSURE SHUTDOWN SEQUENCE FOR PUMP
18. HIGH HIGH LEVEL SHUTDOWN SEQUENCE FOR PUMPS (PUMPS IN QUESTION ARE DETERMINED BY VALVE LINE UP)

REF DWG NO.	DRAWING TITLE
N0001	PIPING, VALVES AND MISCELLANEOUS
N0002	INSTRUMENTATION
N0003	EQUIPMENT AND MISCELLANEOUS

REV. NO.	ISSUE OR REVISION PURPOSE - DESCRIPTION	DATE	REV. BY	APPR
0	ISSUED TO CONSTRUCTION	02/10/03	SJC	GGS

INITIALS AND DATE

UNITED STATES DEPARTMENT OF ENERGY
FERNALD ENVIRONMENTAL MANAGEMENT PROJECT

THIS DRAWING PREPARED BY
JACOBS

PROJECT NAME
SILOS 1 AND 2

DRAWING TITLE
INSTRUMENTATION
PIPING AND INSTRUMENT DIAGRAM
SLURRY RECEIPT TANK C

DRAWN BY	DATE	TECHNICAL LEAD	DATE	CHECKED BY	DATE
M. J.	2/10/03		2/10/03		2/10/03

PLANT/BLDG. NO.	FLOOR	SCALE	CLASS
		NTS	U

SUBMITTED FOR 30% ISSUE	SUBMITTED FOR 60% ISSUE	SUBMITTED FOR 90% ISSUE
TECH LEAD	TECH LEAD	TECH LEAD
DATE	DATE	DATE

T.O. NUMBER	PROJECT NO.	DRAWING INDEX CODE NO.	SHEET NO.	REV. NO.
N/A	40750	94X-3900-N-01167	N0103	0

JES PROJECT NO. 35H19603 FILENAME 94XN1167.DGN

DATE: 02/09/03 USER: KenyMA

4822

000093

4822

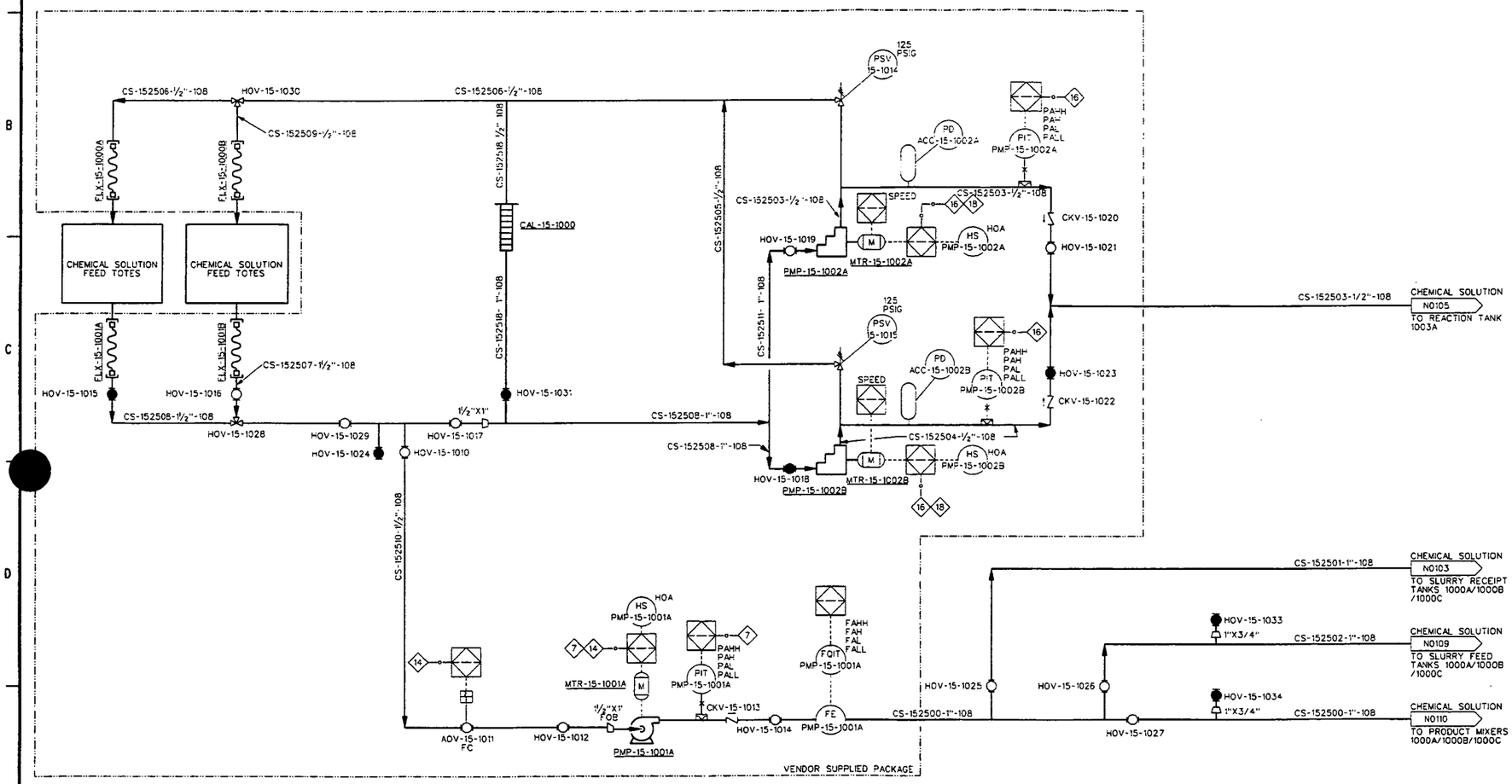

CAL-15-1000
CHEMICAL SOLUTION CALIBRATION GAGE GLASS

PMP-15-1001A
CHEMICAL SOLUTION FEED PUMP 1A
20 GPM @ 95 PSIG

PMP-15-1002A
CHEMICAL SOLUTION METERING PUMP 2A
85 GPH @ 100 PSIG

PMP-15-1002B
CHEMICAL SOLUTION METERING PUMP 2B
85 GPH @ 100 PSIG

MTR-15-1001A
PMP-15-1001A MOTOR
5 HP

MTR-15-1002A
PMP-15-1002A MOTOR
0.75 HP

MTR-15-1002B
PMP-15-1002B MOTOR
0.75 HP

NOTES:

1. AUXILIARY LOCATED CONTROLS ON THIS SHEET ARE LOCATED ON PANEL PNL-90-1021 UNLESS NOTED OTHERWISE
2. SEE SHEET N0002 FOR TYPICAL AOV CONFIGURATION.
3. THE PLC I/O REFERENCE INDICATED WILL NOT BE VENDOR SUPPLIED BUT WILL BE LANDED WITHIN THE CENTRAL CONTROL SYSTEM.

INFORMATION ONLY

INTERLOCKS:

7 HIGH OR LOW PRESSURE SHUTS DOWN PUMP PMP-15-1001A AND CLOSES VALVES.

14 VALVE SHALL BE CLOSED WHEN PUMP IS NOT OPERATING TO PREVENT REVERSE FLOW.

16 HIGH OR LOW PRESSURE SHUTS DOWN PUMP PMP-15-1002A AND PMP-15-1002B CLOSES VALVES.

REF DWG NO.	DRAWING TITLE
N0001	PIPING, VALVES AND MISCELLANEOUS
N0002	INSTRUMENTATION
N0003	EQUIPMENT AND MISCELLANEOUS

REV. NO.	ISSUE OR REVISION PURPOSE - DESCRIPTION	DATE	REV. BY	APPR
0	ISSUED TO CONSTRUCTION	02/10/03	SJC	GES

INITIALS AND DATE

UNITED STATES DEPARTMENT OF ENERGY
FERNALD ENVIRONMENTAL MANAGEMENT PROJECT

THIS DRAWING PREPARED BY
JACOBS
125 Broadway Ave. Oak Ridge, Tennessee 37830 Tel: 865-220-4800 Fax: 865-220-6170

PROJECT NAME
SILOS 1 AND 2

DRAWING TITLE
INSTRUMENTATION
PIPING AND INSTRUMENT DIAGRAM
CHEMICAL SOLUTION FEED SYSTEMS

DRAWN BY	DATE	TECHNICAL LEAD	DATE	CHECKED BY	DATE
MTS	2/6/03	MTS Lemon	2/6/03	S.J. Cp	2/6/03

PLANT/BLDG. NO.	FLOOR	SCALE	CLASS
		NTS	U

SUBMITTED FOR 30% ISSUE	SUBMITTED FOR 60% ISSUE	SUBMITTED FOR 90% ISSUE
TECH LEAD	TECH LEAD	TECH LEAD
DATE	DATE	DATE

T.O. NUMBER	PROJECT NO.	DRAWING INDEX CODE NO.	SHEET NO.	REV. NO.
N/A	40750	94X-3900-N-01168	N0104	0

JEG PROJECT NO.	FILENAME
35H19603	94XINTRS.DGN

000094

DATE: 02/09/03 USER: KentMA

4822

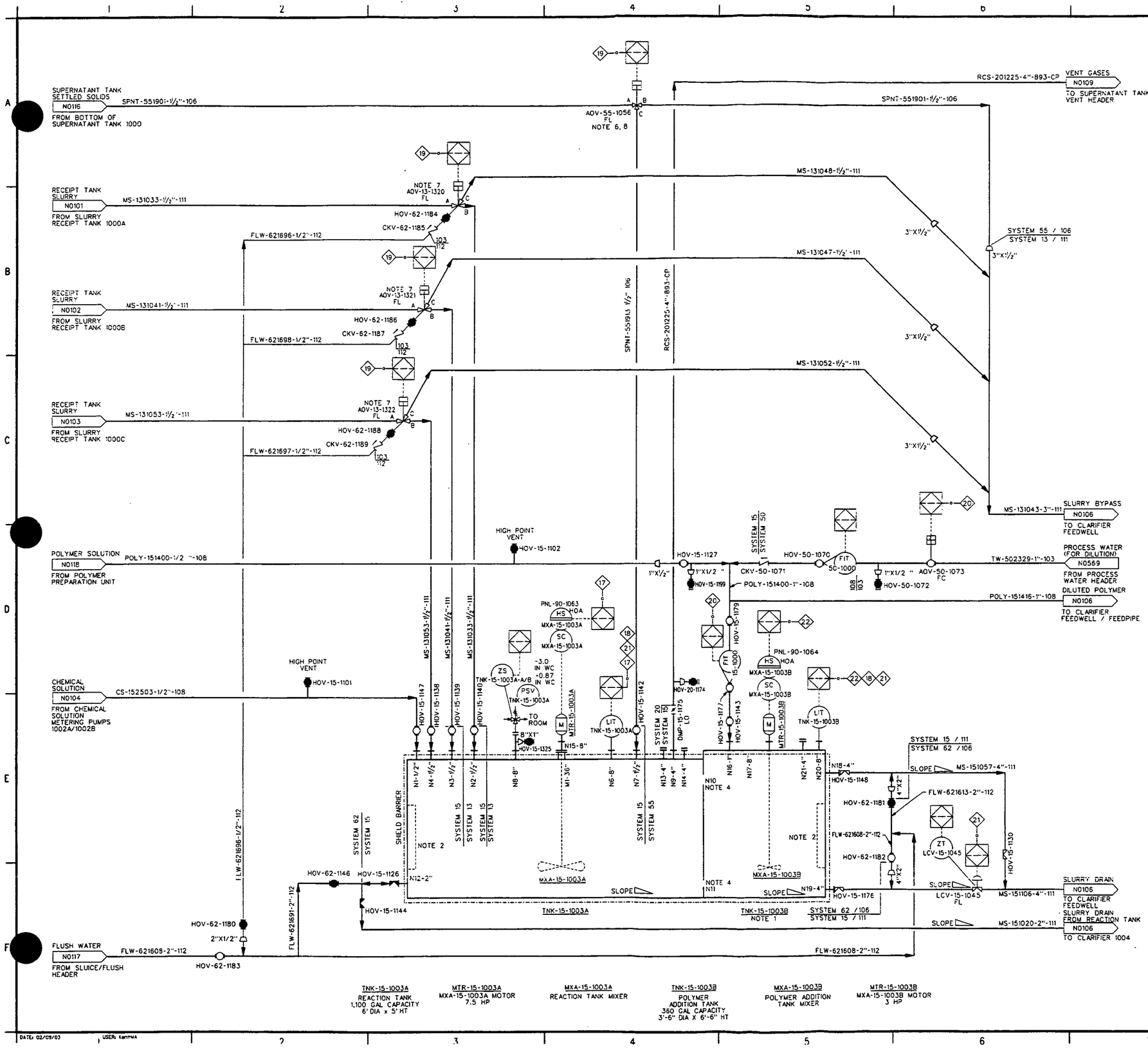

NOTES:

1. POLYMER ADDITION TANK HAS REMOVAL TOP.
2. REACTION TANK TNK-15-1003A AND POLYMER ADDITION TANK TNK-15-1003B CONTAIN 3 BAFFLES EACH
3. AUXILIARY LOCATED CONTROLS ON THIS SHEET ARE LOCATED ON PANEL PNL-90-1006 UNLESS OTHERWISE NOTED.
4. N10 AND N11 ARE PASSAGES BETWEEN TNK-15-1003A AND TNK-15-1003B FOR OVERFLOW AND UNDERFLOW. N10 IS NOMINAL 6"X12" RECTANGLE AND N11 IS 4"X12" RECTANGLE.
5. SEE SHEET N0002 FOR TYPICAL AOV CONFIGURATIONS.
6. SEE VALVE CONFIGURATION #3 SHEET N0002.
7. SEE VALVE CONFIGURATION #2 SHEET N0002.
8. ALL 3-WAY BALL VALVES ON SLURRY LINES WILL BE ONE PIPE DIAMETER LARGER TO MINIMIZE EROSION (I.E., 2-INCH LINES WILL HAVE 3-INCH 3-WAY VALVES).

INFORMATION ONLY

INTERLOCKS:

17. LOW-LOW LEVEL SHUT DOWN MIXER
18. HIGH HIGH LEVEL SHUTDOWN SEQUENCE FOR PUMPS (PUMP IN QUESTION IS DETERMINED BY VALVE LINE UP)
19. VERIFY VALVE LINEUP FOR TRANSFER TO REACTION TANK.
20. LOW OR NO FLOW ON ALL POLYMER LINES SHUTS DOWN POLYMER FEED PUMPS AND DILUTION WATER
21. LEVEL IN REACTION TANK IS CONTROLLED BY MODULATING VALVE IN OUTLET OF POLYMER ADDITION TANK.
22. LOW-LOW LEVEL SHUT DOWN MIXER.

REF DWG NO.	DRAWING TITLE
N0001	PIPING, VALVES AND MISCELLANEOUS
N0002	INSTRUMENTATION
N0003	EQUIPMENT AND MISCELLANEOUS

REV. NO.	ISSUE OR REVISION PURPOSE - DESCRIPTION	DATE	REV. BY	APPR.
0	ISSUED TO CONSTRUCTION	02/10/03	SR	GCS

INITIALS AND DATE

UNITED STATES DEPARTMENT OF ENERGY
FERNALD ENVIRONMENTAL MANAGEMENT PROJECT

THIS DRAWING PREPARED BY
JACOBS
125 Broadway Ave. 6th Floor, Tennessee 37830 Tel: 865-220-6800 Fax: 865-220-6170

PROJECT NAME
SILOS 1 AND 2

DRAWING TITLE
INSTRUMENTATION
PIPING AND INSTRUMENT DIAGRAM
REACTION & POLYMER ADDITION TANK SYSTEMS

DRAWN BY	DATE	TECHNICAL LEAD	DATE	CHECKED BY	DATE
	2/10/03		2/10/03		2/10/03

PLANT/BLDG. NO.	FLOOR	SCALE	CLASS
		NTS	U

SUBMITTED FOR 30% ISSUE	SUBMITTED FOR 60% ISSUE	SUBMITTED FOR 90% ISSUE
TECH LEAD	TECH LEAD	TECH LEAD
DATE	DATE	DATE

T.O. NUMBER	PROJECT NO.	DRAWING INDEX CODE NO.	SHEET NO.	REV. NO.
N/A	40750	94X-3900-N-01169	N0105	0

JEG PROJECT NO.	FILENAME
35H19603	94X01169.DGN

000095

DATE: 02/09/03 USER: KENTWA

4822

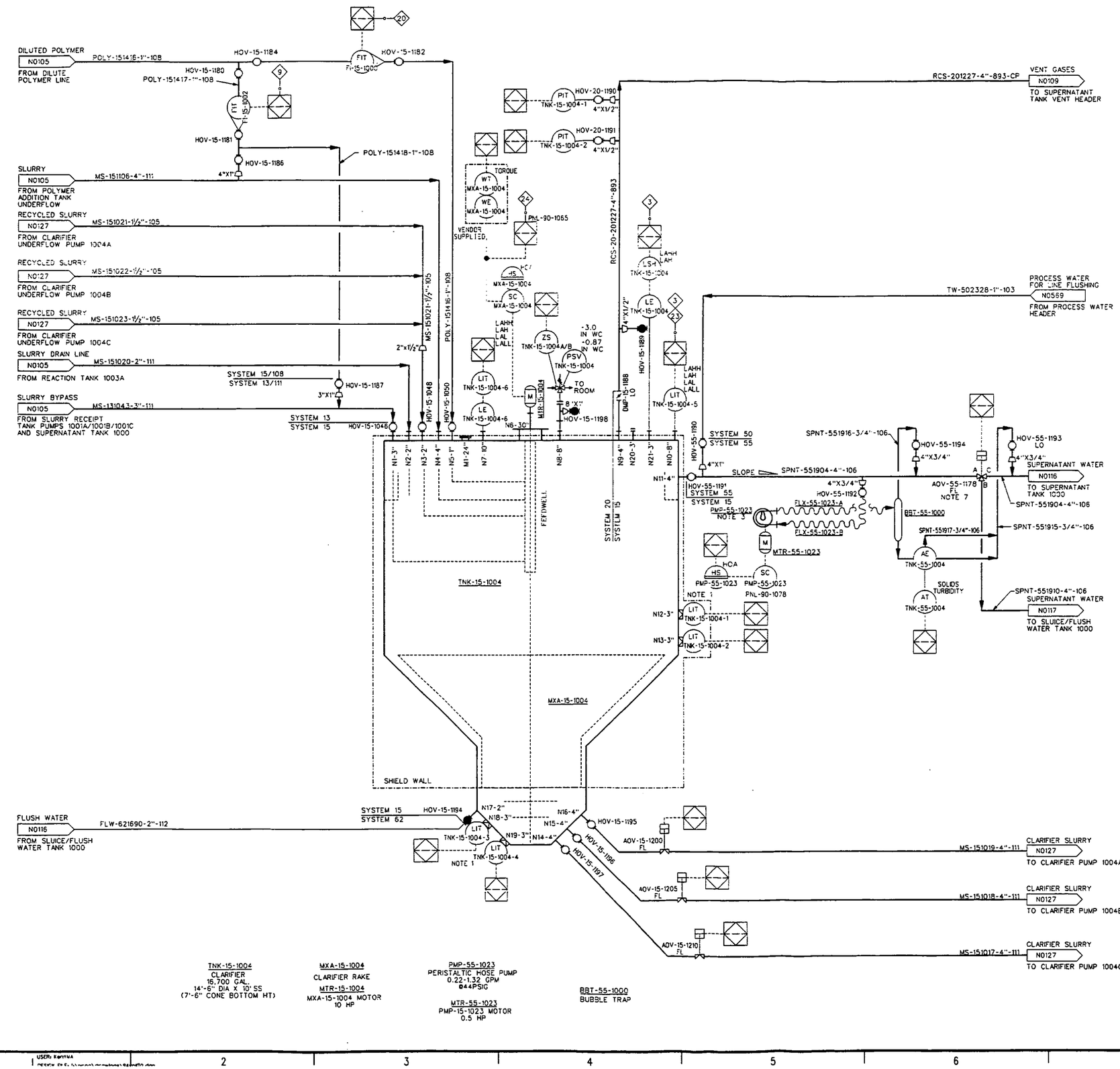

TNK-15-1004
CLARIFIER
16,700 GAL.
14'-6" DIA X 10' SS
(7'-6" CONE BOTTOM HT)

MXA-15-1004
CLARIFIER RAKE
MTR-15-1004
MXA-15-1004 MOTOR
10 HP

PMP-55-1023
PERISTALTIC HOSE PUMP
0.22-1.32 GPM
@44PSIG
MTR-55-1023
PMP-15-1023 MOTOR
0.5 HP

BBT-55-1000
BUBBLE TRAP

NOTES:

1. LEVEL INSTRUMENTS ARE TO USE DIAPHRAGMS THAT FIT INTO NOZZLES AND ARE FLUSH TO TANK WALL.
2. DELETED
3. TURBIDITY METER IS MOUNTED ON BOTTOM OF SUPERNATANT LINE.
4. AUXILIARY LOCATED CONTROLS ON THIS SHEET ARE LOCATED ON PANEL PNL-90-1006 UNLESS NOTED OTHERWISE.
5. ADD POLYMER VIA QUILL.
6. SEE SHEET N0002 FOR TYPICAL AOV CONFIGURATIONS.
7. SEE VALVE CONFIGURATION #3 SHEET N0002.

INFORMATION ONLY

INTERLOCKS:

- (3) HIGH LEVEL SHUTDOWN SEQUENCE FOR PUMPS (PUMP IN QUESTION IS DETERMINED BY VALVE LINEUP).
- (20) LOW OR NO FLOW ON ALL POLYMER LINES SHUTS DOWN POLYMER FEED PUMPS AND DILUTION WATER.
- (23) LOW LEVEL SHUT DOWN PUMP
- (24) HIGH HIGH TORQUE SHUT DOWN RAKE MIXER

REF DWG NO.	DRAWING TITLE
N0001	PIPING, VALVES AND MISCELLANEOUS
N0002	INSTRUMENTATION
N0003	EQUIPMENT AND MISCELLANEOUS

REV. NO.	ISSUE OR REVISION PURPOSE - DESCRIPTION	DATE	REV. BY	APPR.
0	ISSUED TO CONSTRUCTION	02/10/03	SJC	GES

INITIALS AND DATE

UNITED STATES DEPARTMENT OF ENERGY
FERNALD ENVIRONMENTAL MANAGEMENT PROJECT

THIS DRAWING PREPARED BY
JACOBS
125 Broadway Ave. Oak Ridge, Tennessee 37830 Tel: 865-220-4600 Fax: 865-220-6170

PROJECT NAME
SILOS 1 AND 2

DRAWING TITLE
INSTRUMENTATION
PIPING AND INSTRUMENT DIAGRAM
CLARIFIER TANK

DRAWN BY	DATE	TECHNICAL LEAD	DATE	CHECKED BY	DATE
M. Jones	2/10/03	M. Brown	2/10/03	S. J. Cox	2/10/03

PLANT/BLDG. NO.	FLOOR	SCALE	CLASS
		NTS	U

SUBMITTED FOR 30% ISSUE	SUBMITTED FOR 60% ISSUE	SUBMITTED FOR 90% ISSUE
TECH LEAD	TECH LEAD	TECH LEAD
DATE	DATE	DATE

T.O. NUMBER	PROJECT NO.	DRAWING INDEX CODE NO.	SHEET NO.	REV. NO.
N/A	10750	94X-3900-N-01170	N0106	0

JEG PROJECT NO. 35H19603 FILENAME 94XN1170.DGN

000096

DATE: 02/09/03 USER: KENYNA

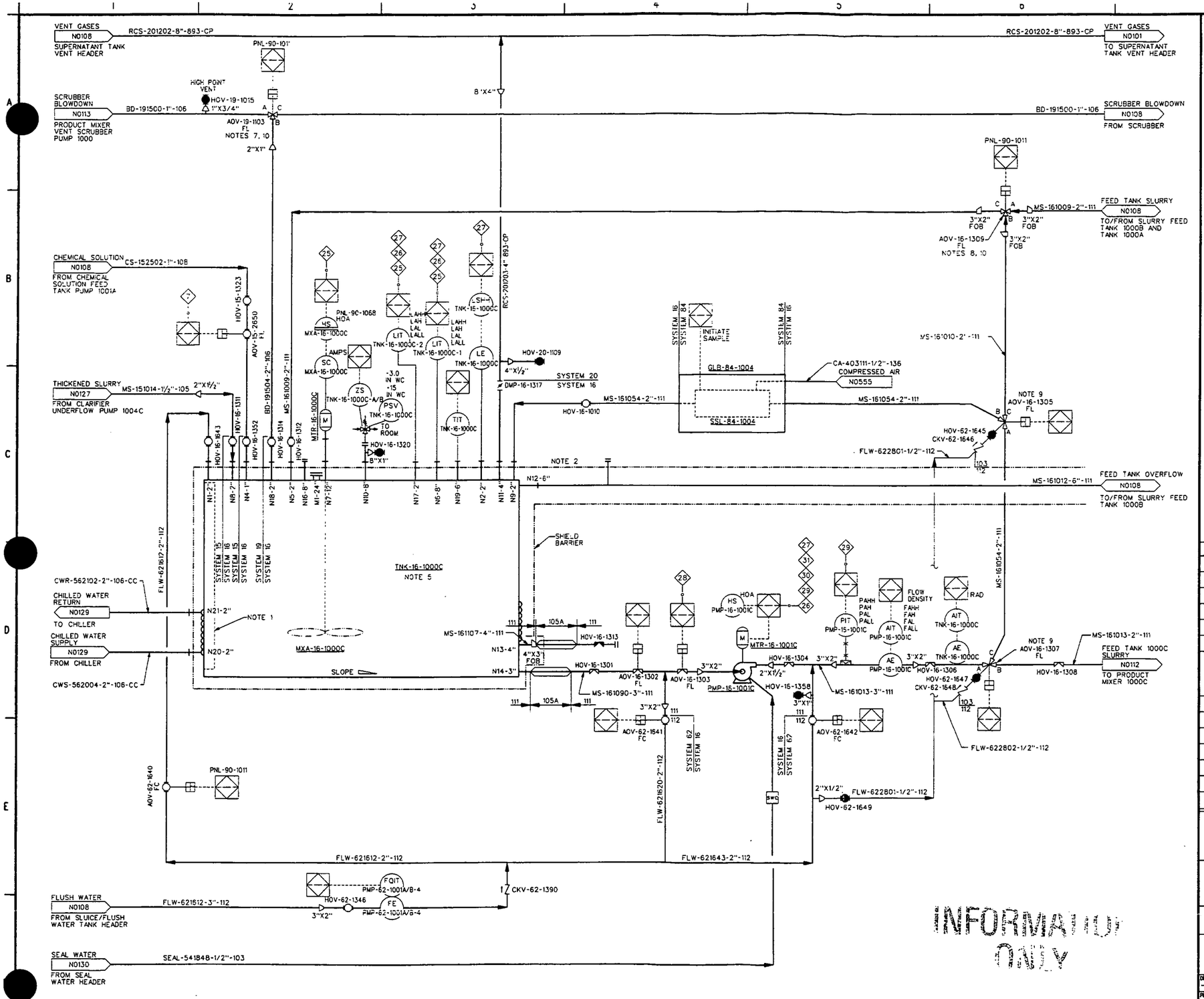

NOTES:

1. TANK CONTAINS 4 BAFFLES TO ENHANCE MIXING.
2. OVERFLOW LINES ARE LOCATED INSIDE THE SHIELD ENCLOSURE.
3. AUXILIARY LOCATED CONTROLS ON THIS SHEET ARE LOCATED ON PANEL PNL-90-1014 UNLESS OTHERWISE NOTED.
4. DELETED
5. ALL HOV BALL VALVES ON TNK-16-1000C TO BE LOCKED OPEN.
6. SEE SHEET N0002 FOR TYPICAL AOV CONFIGURATIONS.
7. SEE VALVE CONFIGURATION #3 SHEET N0002.
8. SEE VALVE CONFIGURATION #4 SHEET N0002.
9. SEE VALVE CONFIGURATION #2 SHEET N0002.
10. ALL 3-WAY BALL VALVES ON SLURRY LINES WILL BE ONE PIPE DIAMETER LARGER TO MINIMIZE EROSION (I.E., 2-INCH LINES WILL HAVE 3-INCH 3-WAY VALVES).

INTERLOCKS:

25 LOW-LOW LEVEL SHUT DOWN MIXER

26 LOW LEVEL SHUT DOWN PUMP

27 HIGH LEVEL SHUT DOWN SEQUENCE FOR PUMPS (PUMP IN QUESTION IS DETERMINED BY VALVE LINE UP)

28 VALVE SHALL BE CLOSED WHEN PUMP IS NOT OPERATING TO PREVENT REVERSE FLOW.

29 HIGH HIGH OR LOW PRESSURE SHUTDOWN SEQUENCE FOR PUMP

30 HIGH WEIGHT START/SHUTDOWN SEQUENCE FOR PUMP.

31 PUMP OPERATE ONLY WHEN BOTTOM DISCHARGE VALVE IS IN CLOSED POSITION.

7 HIGH OR LOW PRESSURE SHUTS DOWN PUMP PMP-15-1001A AND CLOSES VALVES

REF DWG NO.	DRAWING TITLE
N0001	PIPING, VALVES AND MISCELLANEOUS
N0002	INSTRUMENTATION
N0003	EQUIPMENT AND MISCELLANEOUS

REV. NO.	ISSUE OR REVISION PURPOSE - DESCRIPTION	DATE	REV. BY	APPR.
0	ISSUED TO CONSTRUCTION	02/10/03		GCS

INITIALS AND DATE

UNITED STATES DEPARTMENT OF ENERGY
FERNALD ENVIRONMENTAL MANAGEMENT PROJECT

THIS DRAWING PREPARED BY
JACOBS

PROJECT NAME
SILOS 1 AND 2

DRAWING TITLE
INSTRUMENTATION
PIPING AND INSTRUMENT DIAGRAM
SLURRY FEED SYSTEM C

DRAWN BY	DATE	TECHNICAL LEAD	DATE	CHECKED BY	DATE
	2/10/03		2/10/03		2/10/03

PLANT/BLDG. NO. | FLOOR | SCALE: NTS | CLASS: U

SUBMITTED FOR 30% ISSUE — TECH LEAD — DATE
SUBMITTED FOR 60% ISSUE — TECH LEAD — DATE
SUBMITTED FOR 90% ISSUE — TECH LEAD — DATE

T.O. NUMBER	PROJECT NO.	DRAWING INDEX CODE NO.	SHEET NO.	REV. NO.
N/A	40750	94X-3900-N-01171	N0107	0

JCE PROJECT NO. 35H19603 — FILENAME 94X01171.DGN

TNK-16-1000C
SLURRY FEED TANK C
24,700 GAL
14'-6" DIA X 20' HT
NOTE 2

MXA-16-1000C
SLURRY FEED TANK MIXER C

MTR-16-1000C
MXA-16-1000C MOTOR
125 HP

PMP-16-1001C
SLURRY FEED TANK PUMP C
100 GPM @ 75 PSIG

MTR-16-1001C
PMP-16-1001C MOTOR
40 HP

SSL-84-1004
SLURRY SAMPLER FOR TNK-15-1000C

GLB-84-1004
SLURRY RECEIPT TANK C
GLOVEBOX

INFORMATION ONLY

4822

000097

DATE: 02/09/03 USER: KentMA

4822

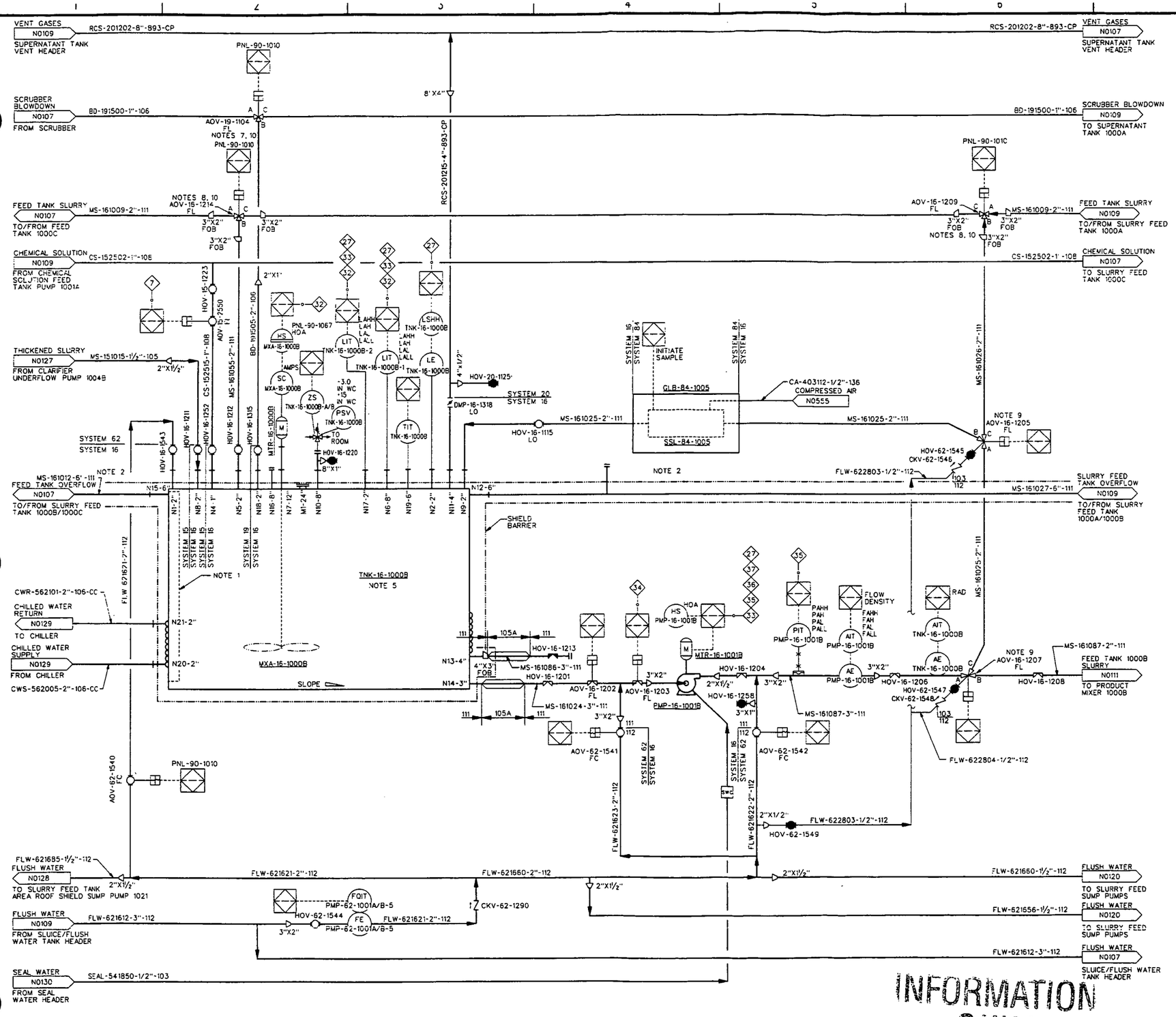

NOTES:

1. TANK CONTAINS 4 BAFFLES TO ENHANCE MIXING.
2. OVERFLOW LINES ARE LOCATED INSIDE THE SHIELD ENCLOSURE.
3. AUXILIARY LOCATED CONTROLS ON THIS SHEET ARE LOCATED ON PANEL PNL-90-1013 UNLESS OTHERWISE NOTED.
4. DELETED
5. ALL HOV BALL VALVES ON TNK-16-1000B TO BE LOCKED OPEN.
6. SEE SHEET N0002 FOR TYPICAL AOV CONFIGURATIONS.
7. SEE VALVE CONFIGURATION #3 SHEET N0002.
8. SEE VALVE CONFIGURATION #4 SHEET N0002.
9. SEE VALVE CONFIGURATION #2 SHEET N0002.
10. ALL 3-WAY BALL VALVES ON SLURRY LINES WILL BE ONE PIPE DIAMETER LARGER TO MINIMIZE EROSION (I.E., 2-INCH LINES WILL HAVE 3-INCH 3-WAY VALVES).

INTERLOCKS:

- 7 HIGH OR LOW PRESSURE SHUTS DOWN PUMP PMP-15-1001A AND CLOSES VALVES.
- 27 HIGH LEVEL SHUT DOWN SEQUENCE FOR PUMPS (PUMP IN QUESTION IS DETERMINED BY VALVE LINE UP)
- 32 LOW-LOW LEVEL SHUT DOWN MIXER
- 33 LOW LEVEL SHUT DOWN PUMP
- 34 VALVE SHALL BE CLOSED WHEN PUMP IS NOT OPERATING TO PREVENT REVERSE FLOW.
- 35 HIGH HIGH OR LOW PRESSURE SHUTDOWN SEQUENCE FOR PUMP
- 36 HIGH WEIGHT START/SHUTDOWN SEQUENCE FOR PUMP.
- 37 PUMP OPERATE ONLY WHEN BOTTOM DISCHARGE VALVE S IN CLOSED POSITION.

REF DWG NO.	DRAWING TITLE
N0001	PIPING, VALVES AND MISCELLANEOUS
N0002	INSTRUMENTATION
N0003	EQUIPMENT AND MISCELLANEOUS

REV. NO.	ISSUE OR REVISION PURPOSE - DESCRIPTION	DATE	REV. BY	APPR
0	ISSUED TO CONSTRUCTION	02/10/03	SJL	GCS

INITIALS AND DATE

UNITED STATES DEPARTMENT OF ENERGY
FERNALD ENVIRONMENTAL MANAGEMENT PROJECT

THIS DRAWING PREPARED BY
JACOBS
125 Broadway Ave. Oak Ridge, Tennessee 37830 Tel: 865-220-4200 Fax: 865-220-4170

PROJECT NAME
SILOS 1 AND 2

DRAWING TITLE
INSTRUMENTATION
PIPING AND INSTRUMENT DIAGRAM
SLURRY FEED SYSTEM B

DRAWN BY	DATE	TECHNICAL LEAD	DATE	CHECKED BY	DATE
M. Jones	2/10/03	[illegible]	2/10/03	[illegible]	2/10/03

PLANT/BLDG. NO.	FLOOR	SCALE	CLASS
		NTS	U

SUBMITTED FOR 30% ISSUE	SUBMITTED FOR 90% ISSUE	SUBMITTED FOR 90% ISSUE
TECH LEAD	TECH LEAD	TECH LEAD
DATE	DATE	DATE

T.O. NUMBER	PROJECT NO.	DRAWING INDEX CODE NO.	SHEET NO.	REV. NO.
N/A	40750	94X-3900-N-01172	N0108	0

JEC PROJECT NO.	FILENAME
35H19603	94XN1172.DGN

INFORMATION ONLY

000098

DATE: 02/09/03 USER: KennMA

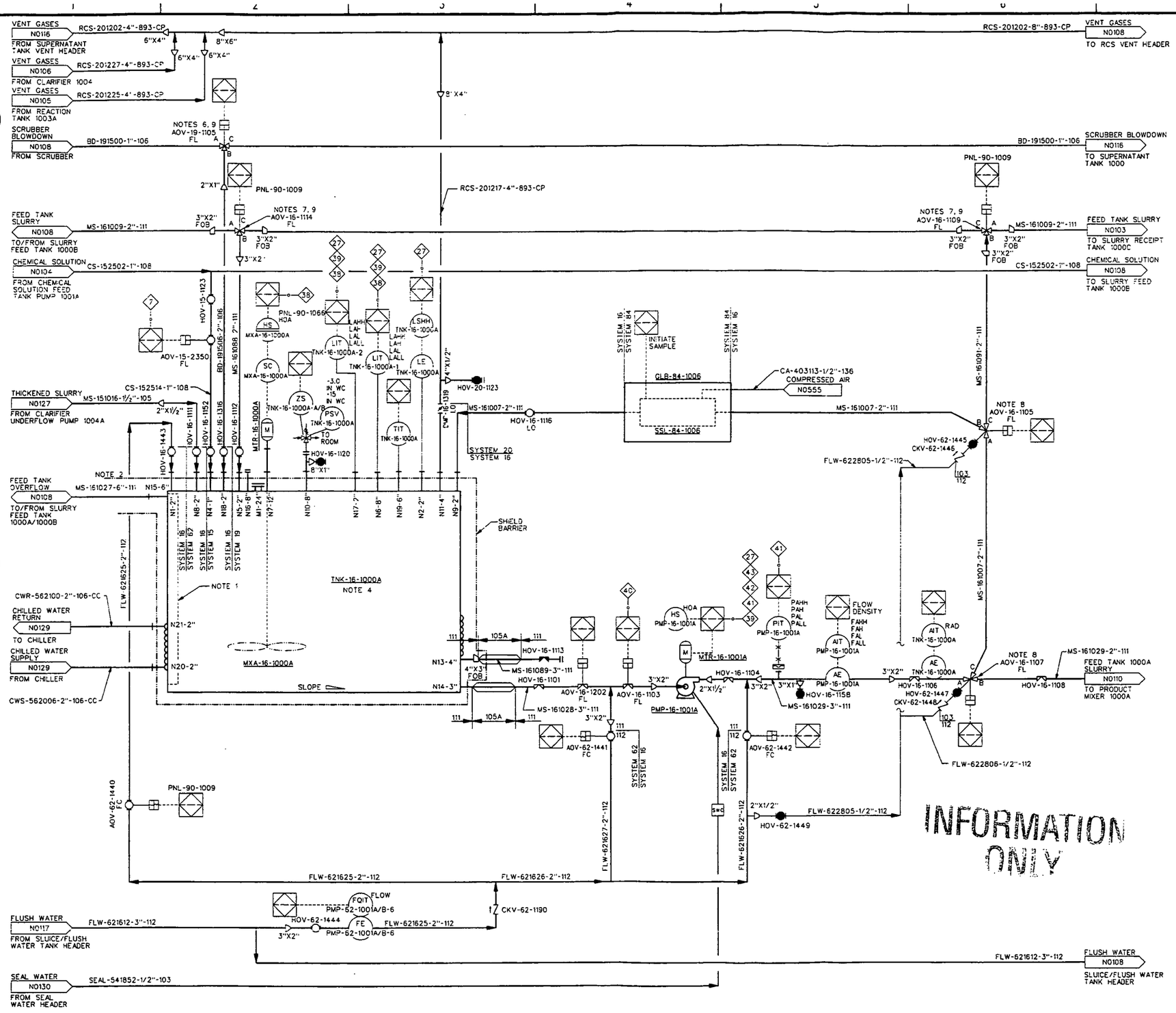

NOTES:

1. TANK CONTAINS 4 BAFFLES TO ENHANCE MIXING.
2. OVERFLOW LINES ARE LOCATED INSIDE THE SHIELD ENCLOSURE.
3. AUXILIARY LOCATED CONTROLS ON THIS SHEET ARE LOCATED ON PANEL PNL-90-1012 UNLESS OTHERWISE NOTED.
4. ALL HOV BALL VALVES ON TNK-16-1000A TO BE LOCKED OPEN
5. SEE SHEET N0002 FOR TYPICAL AOV CONFIGURATIONS
6. SEE VALVE CONFIGURATION #3 SHEET N0002.
7. SEE VALVE CONFIGURATION #4 SHEET N0002.
8. SEE VALVE CONFIGURATION #2 SHEET N0002.
9. ALL 3-WAY BALL VALVES ON SLURRY LINES WILL BE ONE PIPE DIAMETER LARGER TO MINIMIZE EROSION (I.E., 2-INCH LINES WILL HAVE 3-INCH 3-WAY VALVES).

INTERLOCKS:

- (7) HIGH OR LOW PRESSURE SHUTS DOWN PUMP PMP-15-1001A AND CLOSES VALVES
- (27) HIGH LEVEL SHUT DOWN SEQUENCE FOR PUMPS (PUMP IN QUESTION IS DETERMINED BY VALVE LINE UP)
- (38) LOW-LOW LEVEL SHUT DOWN MIXER
- (39) LOW LEVEL SHUT DOWN PUMP
- (40) VALVE SHALL BE CLOSED WHEN PUMP IS NOT OPERATING TO PREVENT REVERSE FLOW.
- (41) HIGH HIGH OR LOW PRESSURE SHUTDOWN SEQUENCE FOR PUMP
- (42) HIGH WEIGHT START/SHUTDOWN SEQUENCE FOR PUMP
- (43) PUMP OPERATE ONLY WHEN BOTTOM DISCHARGE VALVE IS IN CLOSED POSITION.

REF DWG NO.	DRAWING TITLE
N0001	PIPING, VALVES AND MISCELLANEOUS
N0002	INSTRUMENTATION
N0003	EQUIPMENT AND MISCELLANEOUS

03-03-03

REV. NO.	ISSUE OR REVISION PURPOSE - DESCRIPTION	DATE	REV. BY	APPR.
0	ISSUED TO CONSTRUCTION	02/10/03	SJC	GCS

INITIALS AND DATE

UNITED STATES DEPARTMENT OF ENERGY
FERNALD ENVIRONMENTAL MANAGEMENT PROJECT

THIS DRAWING PREPARED BY
JE JACOBS
135 Broadway Ave. 5th Floor, Tennessee 37830
Tel: 865-220-1400
Fax: 865-220-6170

PROJECT NAME
SILOS 1 AND 2

DRAWING TITLE
INSTRUMENTATION
PIPING AND INSTRUMENT DIAGRAM
SLURRY FEED SYSTEM A

DRAWN BY	DATE	TECHNICAL LEAD	DATE	CHECKED BY	DATE
M. Z	2/10/03	M. Z	2/10/03	S. J. C	2/10/03

PLANT/BLDG. NO.	FLOOR	SCALE	CLASS
		NTS	U

SUBMITTED FOR 30% ISSUE	SUBMITTED FOR 60% ISSUE	SUBMITTED FOR 90% ISSUE
TECH LEAD	TECH LEAD	TECH LEAD
DATE	DATE	DATE

T.O. NUMBER	PROJECT NO.	DRAWING INDEX CODE NO.	SHEET NO.	REV. NO.
N/A	40750	94X-3900-N-01173	N0109	0

JEC PROJECT NO. 35H19603 FILENAME 94XH1173.DGN

TNK-16-1000A
SLURRY FEED TANK A
24,700 GAL
14'-6" DIA X 20' HT
NOTE 2

MXA-16-1000A
SLURRY FEED TANK MIXER A

MTR-16-1000A
MXA-16-1000A MOTOR
125 HP

PMP-16-1001A
SLURRY FEED TANK PUMP A
100 GPM @ 75 PSIG

MTR-16-1001A
PMP-16-1001A MOTOR
40 HP

SSL-84-1006
SLURRY SAMPLER FOR TNK-16-1000A

GLB-84-1006
SLURRY FEED TANK A GLOVEBOX

DATE: 02/03/03 USER: KentNA

4822

000099

4822

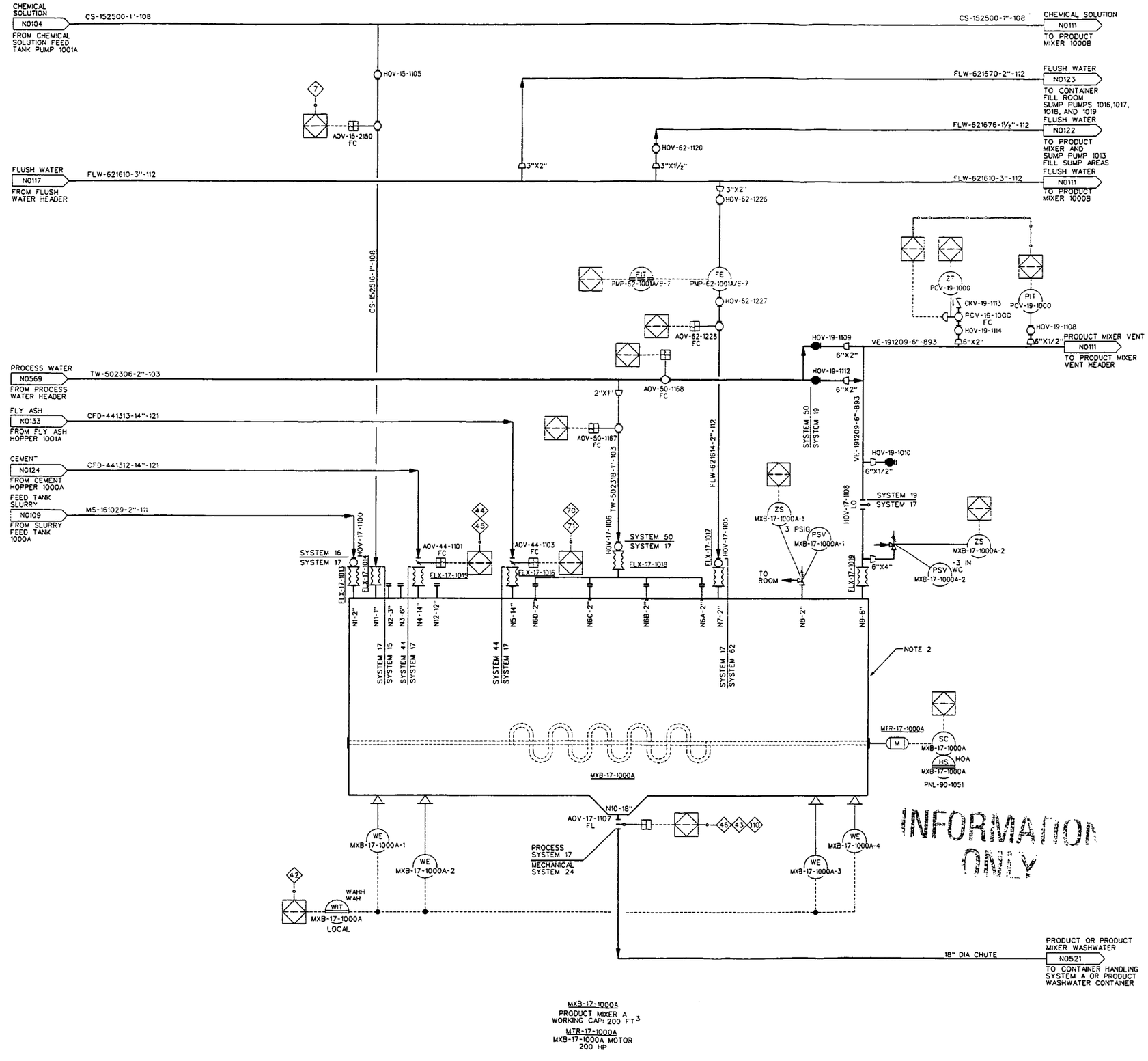

INFORMATION ONLY

NOTES:

1. AUXILIARY LOCATED CONTROLS ON THIS SHEET ARE LOCATED ON PANEL PNL-90-1015 UNLESS OTHERWISE NOTED.
2. BOTH ENDS OF TROUGH ARE REMOVABLE.
3. SEE SHEET N0002 FOR TYPICAL AOV CONFIGURATIONS.

INTERLOCKS:

- 7 — HIGH OR LOW PRESSURE SHUTS DOWN PUMP PMP-15-1001A AND CLOSES VALVES
- 42 — HIGH WEIGHT START/SHUTDOWN SEQUENCE FOR PUMP.
- 43 — PUMP OPERATE ONLY WHEN BOTTOM DISCHARGE VALVE IS IN CLOSED POSITION.
- 44 — OPENS HOPPER DISCHARGE VALVE, STARTS HOPPER ACTIVATOR WHEN LOWER DISCHARGE VALVE IS FULLY OPEN
- 45 — CLOSES LOWER DISCHARGE VALVE WHEN HOPPER DISCHARGE VALVE IS CLOSED
- 46 — MIXER DISCHARGE VALVE LOCKED CLOSED IF CONTAINER NOT IN PLACE & CHUTE NOT POSITIONED
- 70 — OPENS HOPPER DISCHARGE VALVE, STARTS HOPPER ACTIVATOR WHEN LOWER DISCHARGE VALVE IS FULLY OPEN
- 71 — CLOSES LOWER DISCHARGE VALVE WHEN HOPPER DISCHARGE VALVE IS CLOSED
- 110 — VERIFY VALVE POSITION IS CLOSED PRIOR TO RETRACTION OF FILL CHUTE.

REF DWG NO.	DRAWING TITLE
N0001	PIPING, VALVES AND MISCELLANEOUS
N0002	INSTRUMENTATION
N0003	EQUIPMENT AND MISCELLANEOUS

REV. NO.	ISSUE OR REVISION PURPOSE - DESCRIPTION	DATE	REV. BY	APPR.
0	ISSUED TO CONSTRUCTION	02/10/03	JJC	GCS

INITIALS AND DATE

UNITED STATES DEPARTMENT OF ENERGY
FERNALD ENVIRONMENTAL MANAGEMENT PROJECT

THIS DRAWING PREPARED BY
JE JACOBS 125 Broadway Ave. Oak Ridge, Tennessee 37830 Tel: 865-220-4200 Fax: 865-220-6170

PROJECT NAME
SILOS 1 AND 2

DRAWING TITLE
INSTRUMENTATION
PIPING AND INSTRUMENT DIAGRAM
PRODUCT MIXER SYSTEM A

DRAWN BY	DATE	TECHNICAL LEAD	DATE	CHECKED BY	DATE
M. J.	2/6/03		2/10/03		2/10/03

PLANT/BLDG. NO.	FLOOR	SCALE	CLASS
		NTS	U

SUBMITTED FOR 30% ISSUE	SUBMITTED FOR 60% ISSUE	SUBMITTED FOR 90% ISSUE
TECH LEAD	TECH LEAD	TECH LEAD
DATE	DATE	DATE

T.O. NUMBER	PROJECT NO.	DRAWING INDEX CODE NO.	SHEET NO.	REV. NO.
N/A	40750	94X-3900-N-01174	N0110	0

JE PROJECT NO.	FILENAME
35H19603	94XN1174.DGN

000100

DATE: 02/05/03 USER: KERTMA

4822

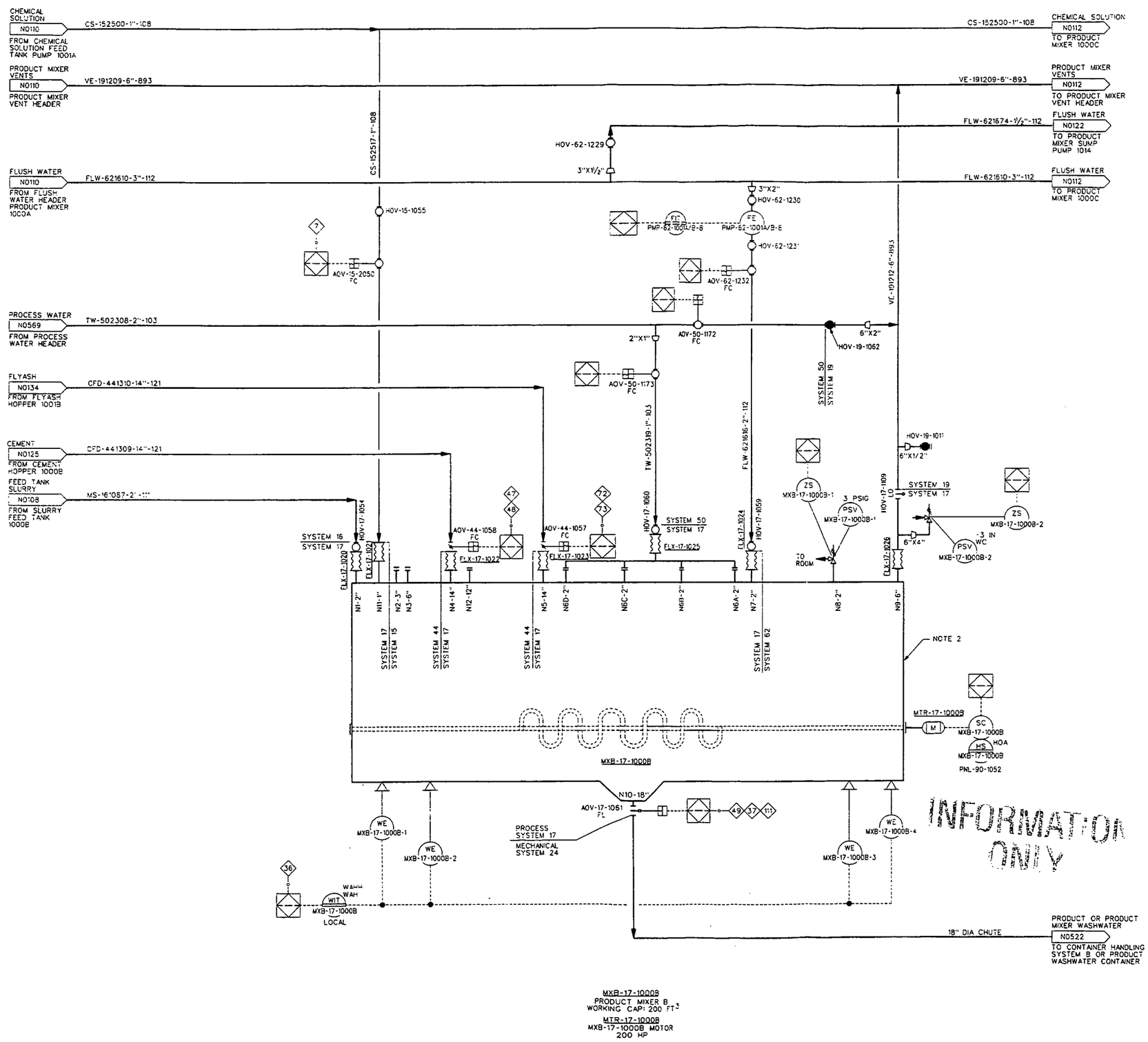

MXB-17-1000B
PRODUCT MIXER B
WORKING CAP: 200 FT³

MTR-17-1000B
MXB-17-1000B MOTOR
200 HP

NOTES:

1. AUXILIARY LOCATED CONTROLS ON THIS SHEET ARE LOCATED ON PANEL PNL-90-1016 UNLESS OTHERWISE NOTED.
2. BOTH ENDS OF TROUGH ARE REMOVABLE.
3. SEE SHEET H0002 FOR TYPICAL AOV CONFIGURATIONS.

INTERLOCKS:

- 7 — HIGH OR LOW PRESSURE SHUTS DOWN PUMP PMP-15-1001A AND CLOSES VALVES
- 36 — HIGH WEIGHT START/SHUTDOWN SEQUENCE FOR PUMP.
- 37 — PUMP OPERATE ONLY WHEN BOTTOM DISCHARGE VALVE IS IN CLOSED POSITION.
- 47 — OPENS HOPPER DISCHARGE VALVE, STARTS HOPPER ACTIVATOR WHEN LOWER DISCHARGE VALVE IS FULLY OPEN
- 48 — CLOSES LOWER DISCHARGE VALVE WHEN HOPPER DISCHARGE VALVE IS CLOSED
- 49 — MIXER DISCHARGE VALVE LOCKED CLOSED IF CONTAINER NOT IN PLACE & CHUTE NOT POSITIONED
- 72 — OPENS HOPPER DISCHARGE VALVE, STARTS HOPPER ACTIVATOR WHEN LOWER DISCHARGE VALVE IS FULLY OPEN
- 73 — CLOSES LOWER DISCHARGE VALVE WHEN HOPPER DISCHARGE VALVE IS CLOSED
- 111 — VERIFY VALVE POSITION IS CLOSED PRIOR TO RETRACTION OF FILL CHUTE.

REF DWG NO.	DRAWING TITLE
N0001	PIPING, VALVES AND MISCELLANEOUS
N0002	INSTRUMENTATION
N0003	EQUIPMENT AND MISCELLANEOUS

REV. NO.	ISSUE OR REVISION PURPOSE - DESCRIPTION	DATE	REV. BY	APPR.
0	ISSUED TO CONSTRUCTION	02/10/03	SJC	GCS

INITIALS AND DATE

UNITED STATES DEPARTMENT OF ENERGY
FERNALD ENVIRONMENTAL MANAGEMENT PROJECT

THIS DRAWING PREPARED BY
JE JACOBS
120 Broadway Ave.
Oak Ridge, Tennessee 37830
Tel: 865-220-4800
Fax: 865-220-6170

PROJECT NAME
SILOS 1 AND 2

DRAWING TITLE
INSTRUMENTATION
PIPING AND INSTRUMENT DIAGRAM
PRODUCT MIXER SYSTEM B

DRAWN BY	DATE	TECHNICAL LEAD	DATE	CHECKED BY	DATE
M. J.	2/4/03		2/10/03		2/10/03
PLANT/BLDG NO.		FLOOR		SCALE: NTS	CLASS: U
SUBMITTED FOR 30% ISSUE		SUBMITTED FOR 60% ISSUE		SUBMITTED FOR 90% ISSUE	
TECH LEAD		TECH LEAD		TECH LEAD	
DATE		DATE		DATE	

T.O. NUMBER	PROJECT NO.	DRAWING INDEX CODE NO.	SHEET NO.	REV. NO.
N/A	40750	94X-3900-N-01175	N0111	0
JE PROJECT NO. 35H19603	FILENAME 94XN1175.DGN			

000101

DATE: 02/09/03 USER: KentMA

4822

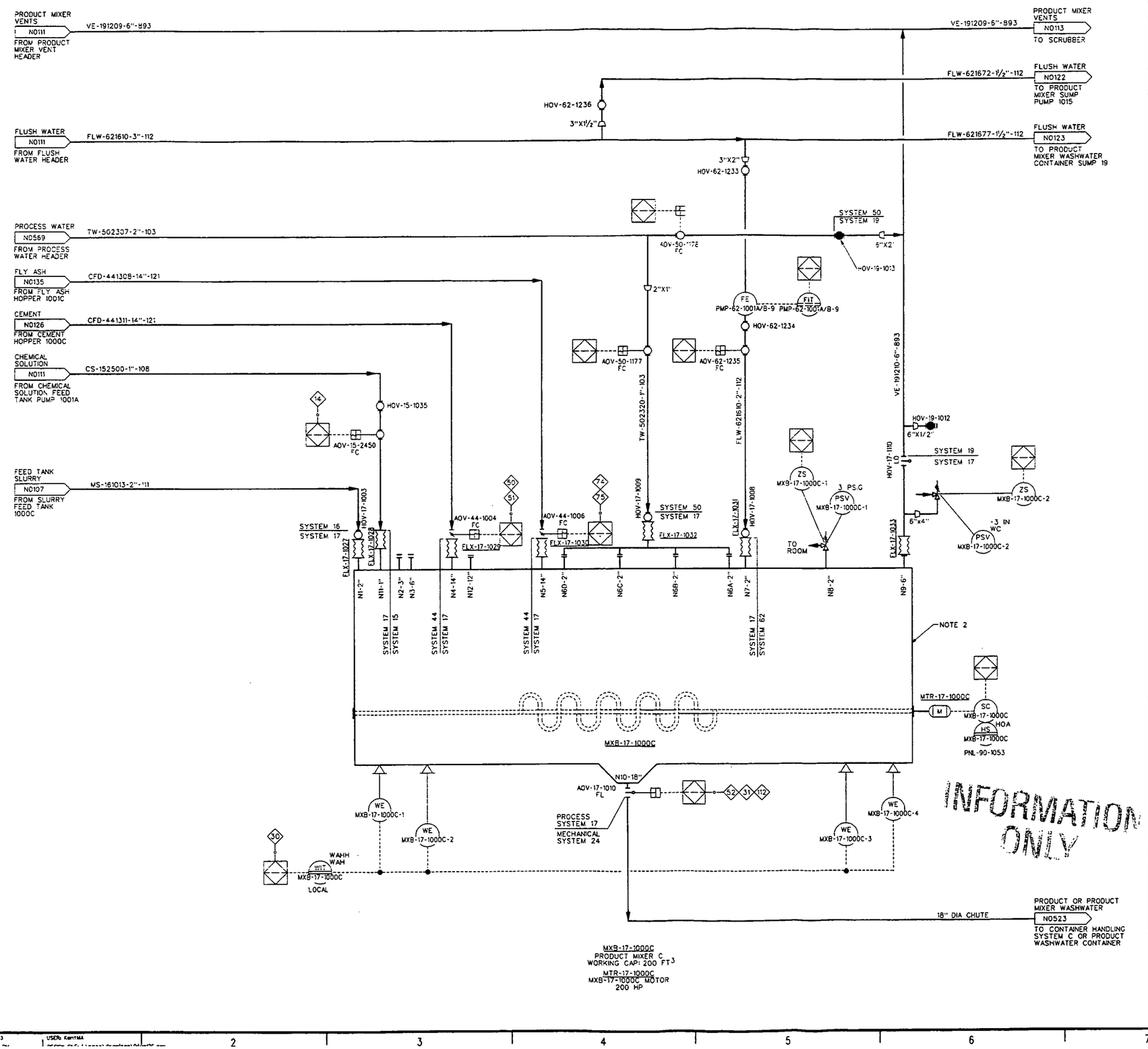

INFORMATION ONLY

NOTES:

1. AUXILIARY LOCATED CONTROLS ON THIS SHEET ARE LOCATED ON PANEL PNL-90-1017 UNLESS OTHERWISE NOTED.
2. BOTH ENDS OF TROUGH ARE REMOVABLE
3. SEE SHEET N0002 FOR TYPICAL AOV CONFIGURATIONS.

INTERLOCKS:

- 7 — HIGH OR LOW PRESSURE SHUTS DOWN PUMP PMP-15-1001A AND CLOSES VALVES
- 30 — HIGH WEIGHT START/SHUTDOWN SEQUENCE FOR PUMP.
- 31 — PUMP OPERATE ONLY WHEN BOTTOM DISCHARGE VALVE IS IN CLOSED POSITION.
- 50 — OPENS HOPPER DISCHARGE VALVE, STARTS HOPPER ACTIVATOR WHEN LOWER DISCHARGE VALVE IS FULLY OPEN
- 51 — CLOSES LOWER DISCHARGE VALVE WHEN HOPPER DISCHARGE VALVE IS CLOSED
- 52 — MIXER DISCHARGE VALVE LOCKED CLOSED IF CONTAINER NOT IN PLACE & CHUTE NOT POSITIONED
- 74 — OPENS HOPPER DISCHARGE VALVE, STARTS HOPPER ACTIVATOR WHEN LOWER DISCHARGE VALVE IS FULLY OPEN
- 75 — CLOSES LOWER DISCHARGE VALVE WHEN HOPPER DISCHARGE VALVE IS CLOSED
- 112 — VERIFY VALVE POSITION IS CLOSED PRIOR TO RETRACTION OF FILL CHUTE.

REF DWG NO.	DRAWING TITLE
N0001	PIPING, VALVES AND MISCELLANEOUS
N0002	INSTRUMENTATION
N0003	EQUIPMENT AND MISCELLANEOUS

REV. NO.	ISSUE OR REVISION PURPOSE - DESCRIPTION	DATE	REV. BY	APPR.
D	ISSUED TO CONSTRUCTION	02/10/03	JJ	GCS

INITIALS AND DATE

UNITED STATES DEPARTMENT OF ENERGY
FERNALD ENVIRONMENTAL MANAGEMENT PROJECT

THIS DRAWING PREPARED BY
JACOBS
125 Broadway Ave.
Oak Ridge, Tennessee 37830
Tel: 865-220-4000
Fax: 865-220-6170

PROJECT NAME
SILOS 1 AND 2

DRAWING TITLE
INSTRUMENTATION
PIPING AND INSTRUMENT DIAGRAM
PRODUCT MIXER SYSTEM C

DRAWN BY	DATE	TECHNICAL LEAD	DATE	CHECKED BY	DATE
	02/11/03		2/10/03		2/10/03
PLANT/BLDG. NO.		FLOOR		SCALE: NTS	CLASS: U
SUBMITTED FOR 30% ISSUE		SUBMITTED FOR 60% ISSUE		SUBMITTED FOR 90% ISSUE	
TECH LEAD		TECH LEAD		TECH LEAD	
DATE		DATE		DATE	

T.O. NUMBER	PROJECT NO.	DRAWING INDEX CODE NO.	SHEET NO.	REV. NO.
N/A	40750	94X-3900-N-01176	N0112	0
J.E.G. PROJECT NO. 35H19603	FILENAME 94XN1176.DGN			

000102

DATE: 02/09/03 USER: KentMA

4822

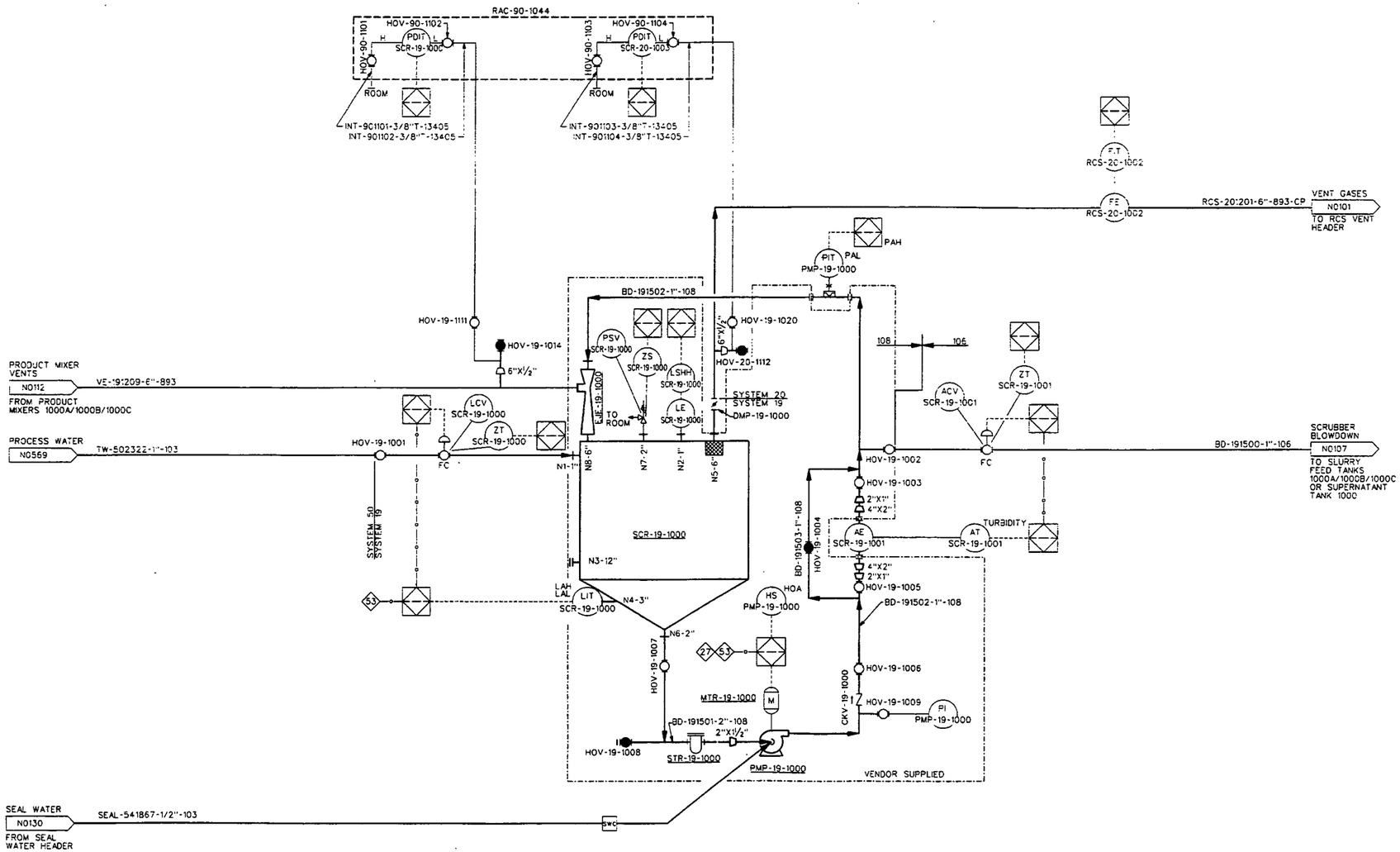

NOTES:

1. AUXILIARY LOCATED CONTROLS ON THIS SHEET ARE LOCATED ON PANEL PNL-90-1023 UNLESS OTHERWISE NOTED
2. SEE SHEET N0002 FOR TYPICAL AOV CONFIGURATIONS.
3. THE PLC I/O REFERENCE INDICATED WILL NOT BE VENDOR SUPPLIED BUT WILL BE LANDED WITHIN THE CENTRAL CONTROL SYSTEM.

INTERLOCKS:

53 LOW LEVEL SHUT DOWN PUMP.

REF DWG NO.	DRAWING TITLE
N0001	PIPING, VALVES AND MISCELLANEOUS
N0002	INSTRUMENTATION
N0003	EQUIPMENT AND MISCELLANEOUS

REV. NO.	ISSUE OR REVISION PURPOSE - DESCRIPTION	DATE	REV. BY	APPR.
0	ISSUED TO CONSTRUCTION	02/10/03		GCS

INITIALS AND DATE

UNITED STATES DEPARTMENT OF ENERGY
FERNALD ENVIRONMENTAL MANAGEMENT PROJECT

THIS DRAWING PREPARED BY
JACOBS

PROJECT NAME: SILOS 1 AND 2

DRAWING TITLE
INSTRUMENTATION
PIPING AND INSTRUMENT DIAGRAM
PRODUCT MIXER VENT SCRUBBER

DRAWN BY	DATE	TECHNICAL LEAD	DATE	CHECKED BY	DATE
	2/10/03		2/10/03		2/10/03

PLANT/BLDG. NO.	FLOOR	SCALE	CLASS
		NTS	U

SUBMITTED FOR 30% ISSUE	SUBMITTED FOR 60% ISSUE	SUBMITTED FOR 90% ISSUE
TECH LEAD	TECH LEAD	TECH LEAD
DATE	DATE	DATE

T.O. NUMBER	PROJECT NO.	DRAWING INDEX CODE NO.	SHEET NO.	REV. NO.
N/A	40750	94X-3900-N-01177	N0113	0

JEC PROJECT NO. 35H19603 FILENAME 94XN1177.DGN

SCR-19-1000
PRODUCT MIXER VENT SCRUBBER

EJE-19-1000
EJECTOR

PMP-19-1000
PRODUCT MIXER VENT SCRUBBER CIRCULATION PUMP
6 GPM @ 65' TDH

MTR-19-1000
PMP-19-1000 MOTOR
2 HP @ 3500 RPM

STR-19-1000
PRODUCT MIXER VENT SCRUBBER CIRCULATION PUMP BASKET STRAINER

INFORMATION ONLY

000103

DATE: 02/09/03 USER: KenMA

4822

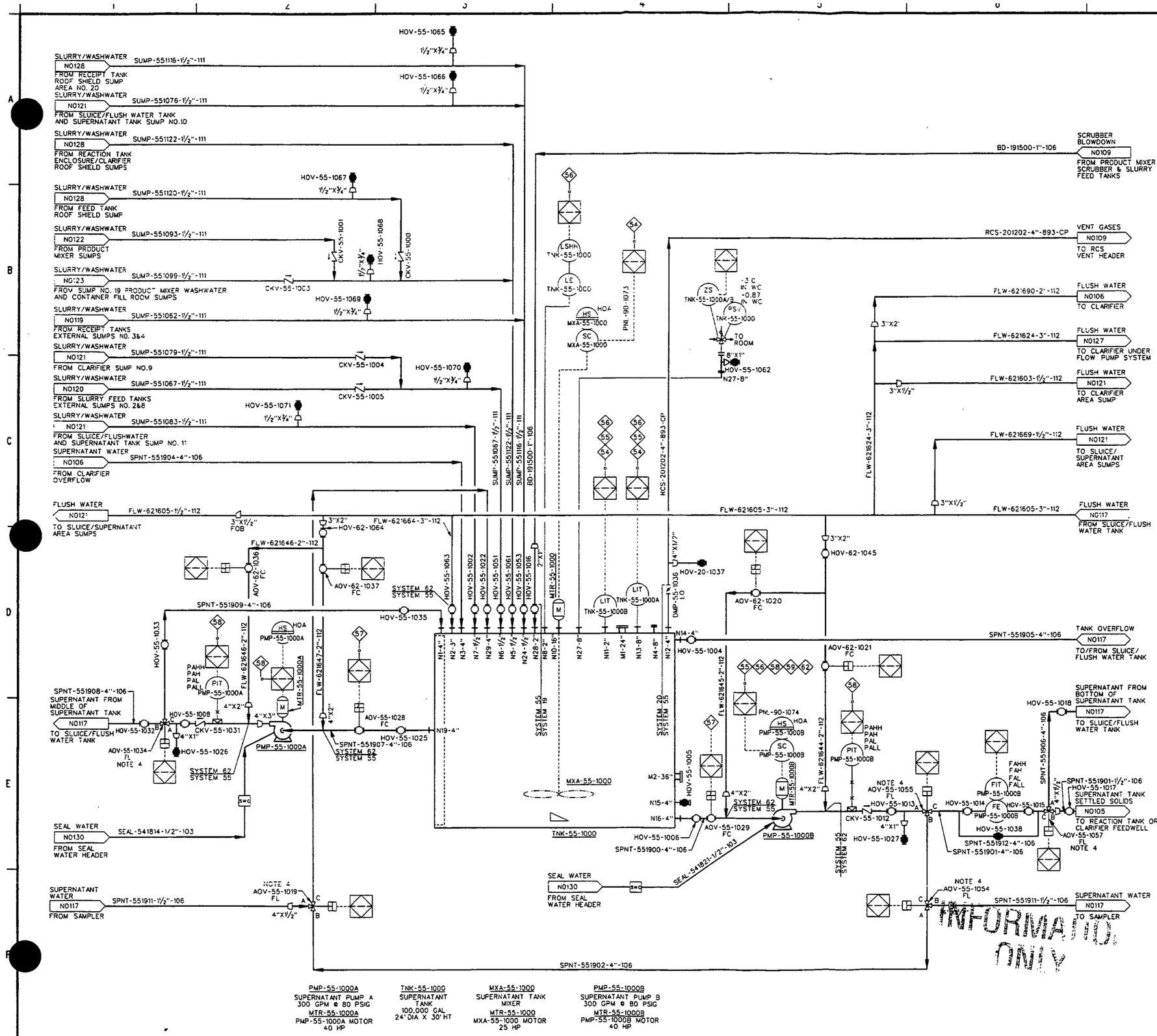

NOTES:

1. AUXILIARY LOCATED CONTROLS ON THIS SHEET ARE LOCATED ON PANEL PNL-90-1018 UNLESS NOTED OTHERWISE.
2. ALL HOV BALL VALVES ON TNK-55-1000 TO BE LOCKED OPEN.
3. SEE SHEET N0002 FOR TYPICAL AOV CONFIGURATIONS.
4. SEE VALVE CONFIGURATION #3 SHEET N0002.

INTERLOCKS:

- 54 LOW-LOW LEVEL SHUT DOWN MIXER
- 55 LOW LEVEL SHUT DOWN PUMP
- 56 HIGH LEVEL SHUT DOWN SEQUENCE FOR PUMPS (PUMP IN QUESTION IS DETERMINED BY VALVE LINE UP)
- 57 VALVE SHALL BE CLOSED WHEN PUMP IS NOT OPERATING TO PREVENT REVERSE FLOW
- 58 HIGH HIGH OR LOW PRESSURE SHUTDOWN SEQUENCE FOR PUMP
- 59 VERIFY VALVE LINEUP FOR TRANSFER TO REACTION TANK

REF DWG NO.	DRAWING TITLE
N0001	PIPING, VALVES AND MISCELLANEOUS
N0002	INSTRUMENTATION
N0003	EQUIPMENT AND MISCELLANEOUS

REV. NO.	ISSUE OR REVISION PURPOSE - DESCRIPTION	DATE	REV. BY	APPR.
0	ISSUED TO CONSTRUCTION	02/10/03		

INITIALS AND DATE

UNITED STATES DEPARTMENT OF ENERGY
FERNALD ENVIRONMENTAL MANAGEMENT PROJECT

THIS DRAWING PREPARED BY
JACOBS 125 Broadway Ave. Oak Ridge, Tennessee 37830 Tel: 865-220-4800 Fax: 865-220-6170

PROJECT NAME: SILOS 1 AND 2

DRAWING TITLE: INSTRUMENTATION PIPING AND INSTRUMENT DIAGRAM SUPERNATANT WATER SYSTEM

DRAWN BY	DATE	TECHNICAL LEAD	DATE	CHECKED BY	DATE
	2/10/03		2/10/03		2/10/03

PLANT/BLDG. NO. | FLOOR | SCALE: NTS | CLASS: U

SUBMITTED FOR 30% ISSUE: TECH LEAD ____ DATE ____
SUBMITTED FOR 60% ISSUE: TECH LEAD ____ DATE ____
SUBMITTED FOR 90% ISSUE: TECH LEAD ____ DATE ____

T.O. NUMBER	PROJECT NO.	DRAWING INDEX CODE NO.	SHEET NO.	REV. NO.
N/A	40750	94X-3900-N-01180	N0116	0

JEC PROJECT NO. 35H19603 | FILENAME 94XN1180.DGN

INFORMATION ONLY

000104

DATE: 02/09/03 | USER: kem1MA

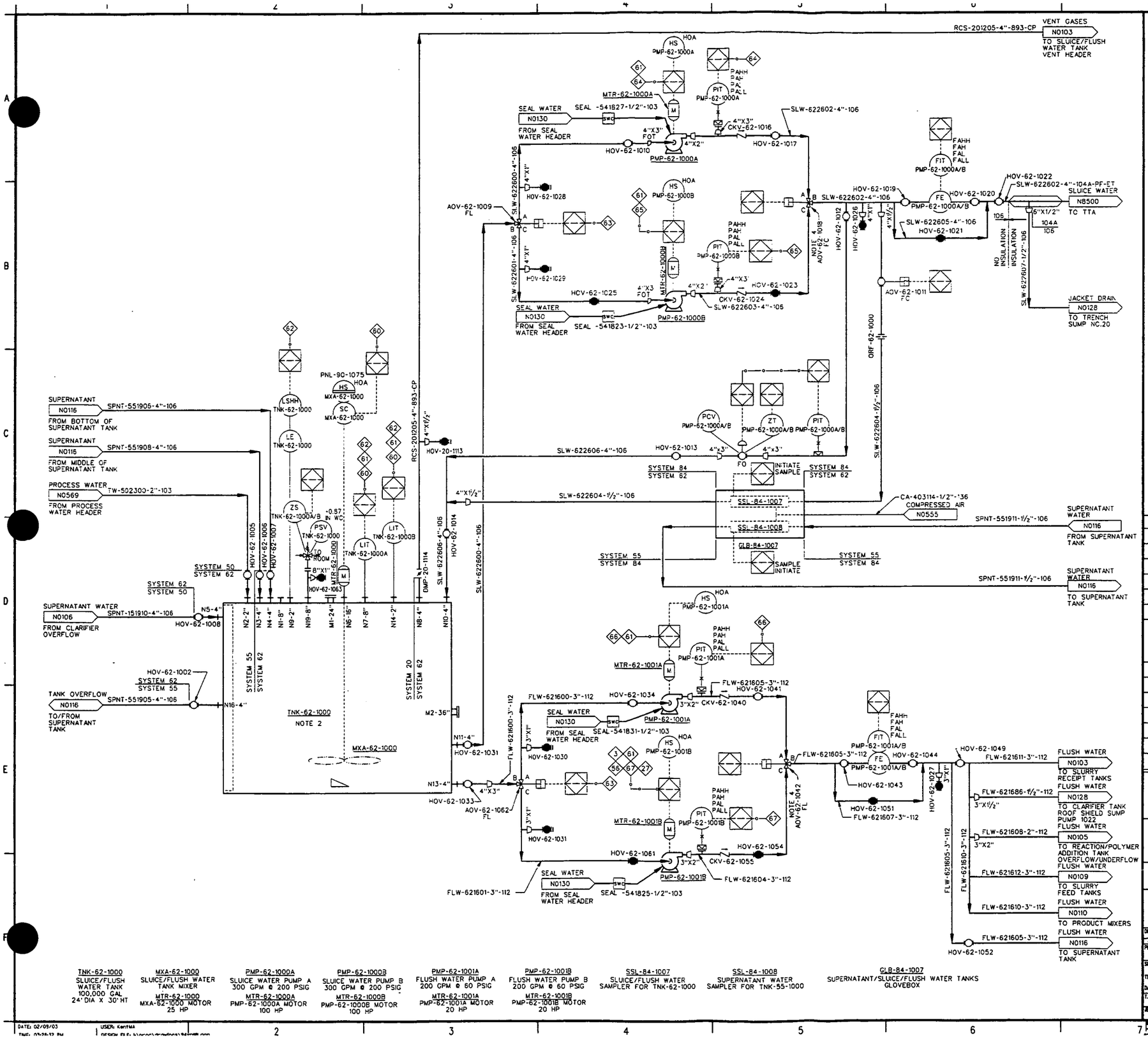

TNK-62-1000
SLUICE/FLUSH WATER TANK
100,000 GAL
24' DIA X 30' HT

MXA-62-1000
SLUICE/FLUSH WATER TANK MIXER
MTR-62-1000
MXA-62-1000 MOTOR
25 HP

PMP-62-1000A
SLUICE WATER PUMP A
300 GPM @ 200 PSIG
MTR-62-1000A
PMP-62-1000A MOTOR
100 HP

PMP-62-1000B
SLUICE WATER PUMP B
300 GPM @ 200 PSIG
MTR-62-1000B
PMP-62-1000B MOTOR
100 HP

PMP-62-1001A
FLUSH WATER PUMP A
200 GPM @ 60 PSIG
MTR-62-1001A
PMP-62-1001A MOTOR
20 HP

PMP-62-1001B
FLUSH WATER PUMP B
200 GPM @ 60 PSIG
MTR-62-1001B
PMP-62-1001B MOTOR
20 HP

SSL-84-1007
SLUICE/FLUSH WATER SAMPLER FOR TNK-62-1000

SSL-84-1008
SUPERNATANT WATER SAMPLER FOR TNK-55-1000

GLB-84-1007
SUPERNATANT/SLUICE/FLUSH WATER TANKS GLOVEBOX

NOTES:

1. AUXILIARY LOCATED CONTROLS ON THIS SHEET ARE LOCATED ON PANEL PNL-90-1019 UNLESS OTHERWISE NOTED.
2. ALL HOV BALL VALVES ON TNK-62-1000 TO BE LOCKED OPEN.
3. SEE SHEET N0002 FOR TYPICAL AOV CONFIGURATIONS.
4. SEE VALVE CONFIGURATION #4 SHEET N0002.

INFORMATION ONLY

INTERLOCKS:

60 LOW-LOW LEVEL SHUT DOWN MIXER

61 LOW LEVEL SHUT DOWN PUMP

62 HIGH LEVEL SHUT DOWN SEQUENCE FOR PUMPS (PUMP IN QUESTION IS DETERMINED BY VALVE LINE UP)

63 VALVE SHALL BE CLOSED WHEN PUMP IS NOT OPERATING TO PREVENT REVERSE FLOW.

64 HIGH HIGH OR LOW PRESSURE SHUTDOWN SEQUENCE FOR PUMP.

65 HIGH HIGH OR LOW PRESSURE SHUTDOWN SEQUENCE FOR PUMP.

66 HIGH HIGH OR LOW PRESSURE SHUTDOWN SEQUENCE FOR PUMP.

67 HIGH HIGH OR LOW PRESSURE SHUTDOWN SEQUENCE FOR PUMP.

REF DWG NO.	DRAWING TITLE
N0001	PIPING, VALVES AND MISCELLANEOUS
N0002	INSTRUMENTATION
N0003	EQUIPMENT AND MISCELLANEOUS

REV. NO.	ISSUE OR REVISION PURPOSE - DESCRIPTION	DATE	REV. BY	APPR.
0	ISSUED TO CONSTRUCTION	02/10/03	SJC	GCS

INITIALS AND DATE

UNITED STATES DEPARTMENT OF ENERGY
FERNALD ENVIRONMENTAL MANAGEMENT PROJECT

THIS DRAWING PREPARED BY
JE JACOBS
125 Broadway Ave.
Oak Ridge, Tennessee 37830
Tel: 865-220-4800
Fax: 865-220-8170

PROJECT NAME
SILOS 1 AND 2

DRAWING TITLE
INSTRUMENTATION
PIPING AND INSTRUMENT DIAGRAM
SLUICE/FLUSH WATER SYSTEM

DRAWN BY	DATE	TECHNICAL LEAD	DATE	CHECKED BY	DATE
	2/10/03		2/10/03		2/10/03

PLANT/BLDG. NO.	FLOOR	SCALE	CLASS
		NTS	U

SUBMITTED FOR 30% ISSUE	SUBMITTED FOR 60% ISSUE	SUBMITTED FOR 90% ISSUE
TECH LEAD	TECH LEAD	TECH LEAD
DATE	DATE	DATE

T.O. NUMBER	PROJECT NO.	DRAWING INDEX CODE NO.	SHEET NO.	REV. NO.
N/A	40750	94X-3900-N-01181	N0117	0

JEG PROJECT NO.	FILENAME
35H19603	94XNTBLOGH

DATE: 02/05/03
USER: KentMA

4822

000105

4822

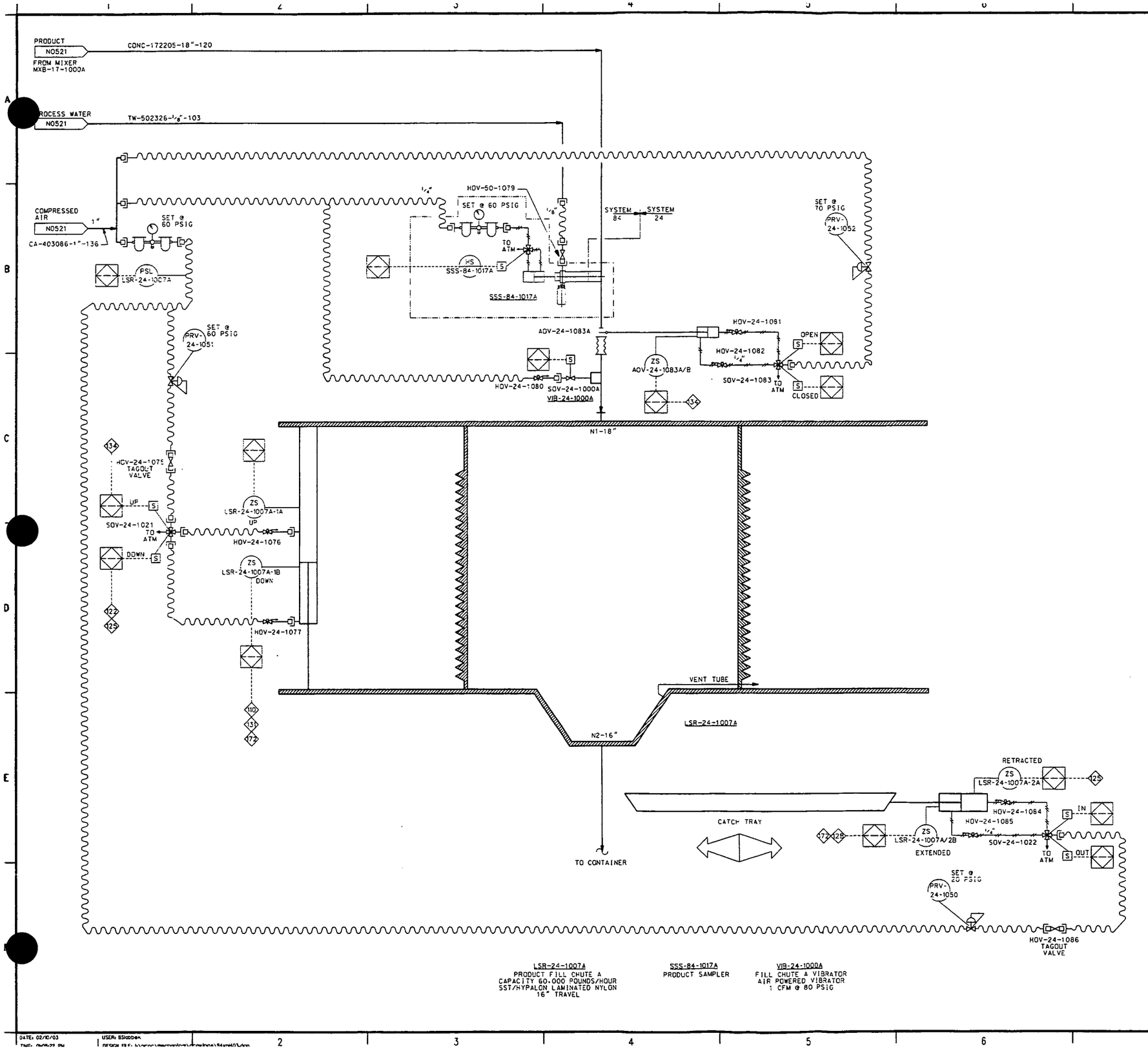

LSR-24-1007A
PRODUCT FILL CHUTE A
CAPACITY 60,000 POUNDS/HOUR
SST/HYPALON LAMINATED NYLON
16" TRAVEL

SSS-84-1017A
PRODUCT SAMPLER

VIB-24-1000A
FILL CHUTE A VIBRATOR
AIR POWERED VIBRATOR
1 CFM @ 80 PSIG

NOTES:

1. SEE SPECIFICATION ES-JME-LSR-24-1007 FOR FILL CHUTE DETAILS.
2. FOR SEQUENCE OF EVENTS SEE SHEET FC504.

INTERLOCKS:

- 110 MIXER DISCHARGE VALVE LOCKED CLOSED UNLESS A CONTAINER IS IN PLACE AND FILL CHUTE IS DEPLOYED
- 122 DO NOT DEPLOY FILL CHUTE UNLESS A CONTAINER IS IN PLACE
- 125 DO NOT DEPLOY FILL CHUTE UNLESS CATCH TRAY IS RETRACTED
- 128 DO NOT MOVE CAR FROM FILL POSITION UNTIL CATCH TRAY IS IN PLACE.
- 131 DO NOT MOVE CAR UNLESS PRODUCT FILL CHUTE IS UP.
- 134 DO NOT RETRACT FILL CHUTE IF MIXER DISCHARGE VALVE IS OPEN
- 172 DO NOT EXTEND CATCH TRAY IF FILLCHUTE IS DEPLOYED

INFORMATION ONLY

REF DWG NO.	DRAWING TITLE
N0001	PIPING, VALVES AND MISCELLANEOUS
N0002	INSTRUMENTATION
N0003	EQUIPMENT AND MISCELLANEOUS

REV NO.	ISSUE OR REVISION PURPOSE - DESCRIPTION	DATE	REV. BY	APPR.
0	ISSUED TO CONSTRUCTION	02/10/03		

INITIALS AND DATE

UNITED STATES DEPARTMENT OF ENERGY
FERNALD ENVIRONMENTAL MANAGEMENT PROJECT

THIS DRAWING PREPARED BY
JE JACOBS

PROJECT NAME
SILOS 1 AND 2

DRAWING TITLE
INSTRUMENTATION
PIPING AND INSTRUMENT DIAGRAM
CONTAINER FILLING SYSTEM - SHEET 11 OF 13

DRAWN BY	DATE	TECHNICAL LEAD	DATE	CHECKED BY	DATE
	02/10/03		2/10/03		2/10/03

PLANT/BLDG NO. — FLOOR — SCALE: NONE — CLASS: U

SUBMITTED FOR 30% ISSUE — TECH LEAD — DATE
SUBMITTED FOR 60% ISSUE — TECH LEAD — DATE
SUBMITTED FOR 90% ISSUE — TECH LEAD — DATE

T.O. NUMBER	PROJECT NO.	DRAWING INDEX CODE NO.	SHEET NO.	REV. NO.
N/A	40750	94X-3900-N-01403	N1100	0

JES PROJECT NO. 35H19603 — FILENAME 94XH403.DGN

DATE: 02/10/03
USER: BSHOBBK

000106

4822

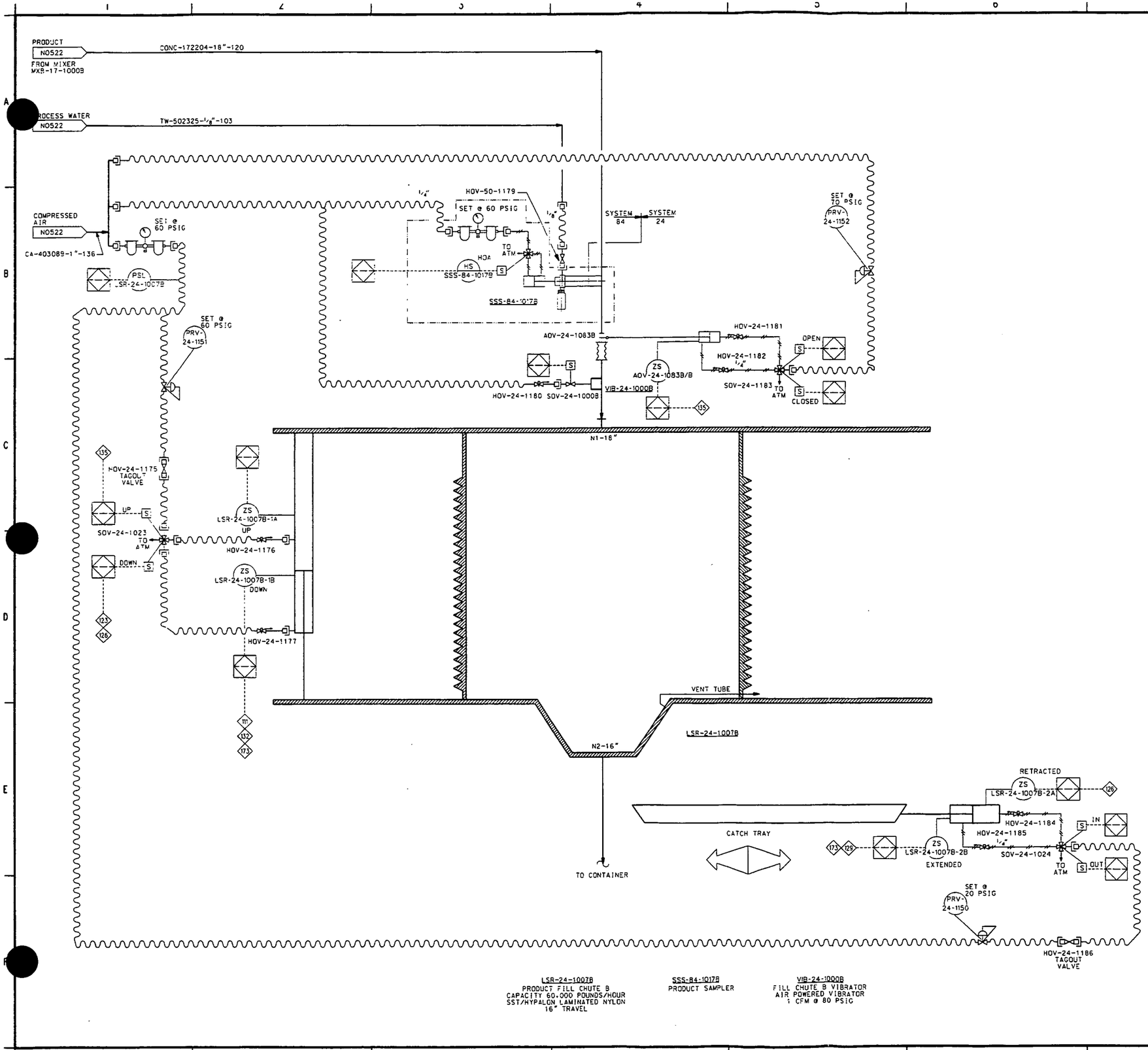

NOTES:

1. SEE SPECIFICATION ES-JME-LSR-24-1007 FOR FILL CHUTE DETAILS.
2. FOR SEQUENCE OF EVENTS SEE SHEET F0504.

INTERLOCKS:

- 111 MIXER DISCHARGE VALVE LOCKED CLOSED UNLESS A CONTAINER IS IN PLACE AND FILL CHUTE IS DEPLOYED
- 123 DO NOT DEPLOY FILL CHUTE UNLESS A CONTAINER IS IN PLACE.
- 126 DO NOT DEPLOY FILL CHUTE UNLESS CATCH TRAY IS RETRACTED
- 129 DO NOT MOVE CAR FROM FILL POSITION UNTIL CATCH TRAY IS IN PLACE.
- 132 DO NOT MOVE CAR UNLESS PRODUCT FILL CHUTE IS UP.
- 134 DO NOT RETRACT FILL CHUTE IF MIXER DISCHARGE VALVE IS OPEN.
- 173 DO NOT EXTEND CATCH TRAY IF FILLCHUTE IS DEPLOYED

INFORMATION ONLY

REF DWG NO.	DRAWING TITLE
N0001	PIPING, VALVES AND MISCELLANEOUS
N0002	INSTRUMENTATION
N0003	EQUIPMENT AND MISCELLANEOUS

REV NO.	ISSUE OR REVISION PURPOSE - DESCRIPTION	DATE	REV BY	APPR
0	ISSUED TO CONSTRUCTION	02/10/03		

INITIALS AND DATE

UNITED STATES DEPARTMENT OF ENERGY
FERNALD ENVIRONMENTAL MANAGEMENT PROJECT

THIS DRAWING PREPARED BY
JACOBS
135 Broadway Ave.
Oak Ridge, Tennessee 37830
Tel: 865-220-4800
Fax: 865-220-6170

PROJECT NAME
SILOS 1 AND 2

DRAWING TITLE
INSTRUMENTATION
PIPING AND INSTRUMENT DIAGRAM
CONTAINER FILLING SYSTEM - SHEET 12 OF 13

DRAWN BY	DATE	TECHNICAL LEAD	DATE	CHECKED BY	DATE
	1/16/03		2/10/03		2/10/03
PLANT/BLDG. NO.		FLOOR		SCALE: NONE	CLASS: U
SUBMITTED FOR 30% ISSUE		SUBMITTED FOR 60% ISSUE		SUBMITTED FOR 90% ISSUE	
TECH LEAD		TECH LEAD		TECH LEAD	
DATE		DATE		DATE	

T.O. NUMBER	PROJECT NO.	DRAWING INDEX CODE NO.	SHEET NO.	REV. NO.
N/A	40750	94X-3900-N-01404	N1101	0
JEG PROJECT NO. 35H19603	FILENAME 94XN1404.DGN			

000107

DATE: 02/10/03 USER: BSabbak

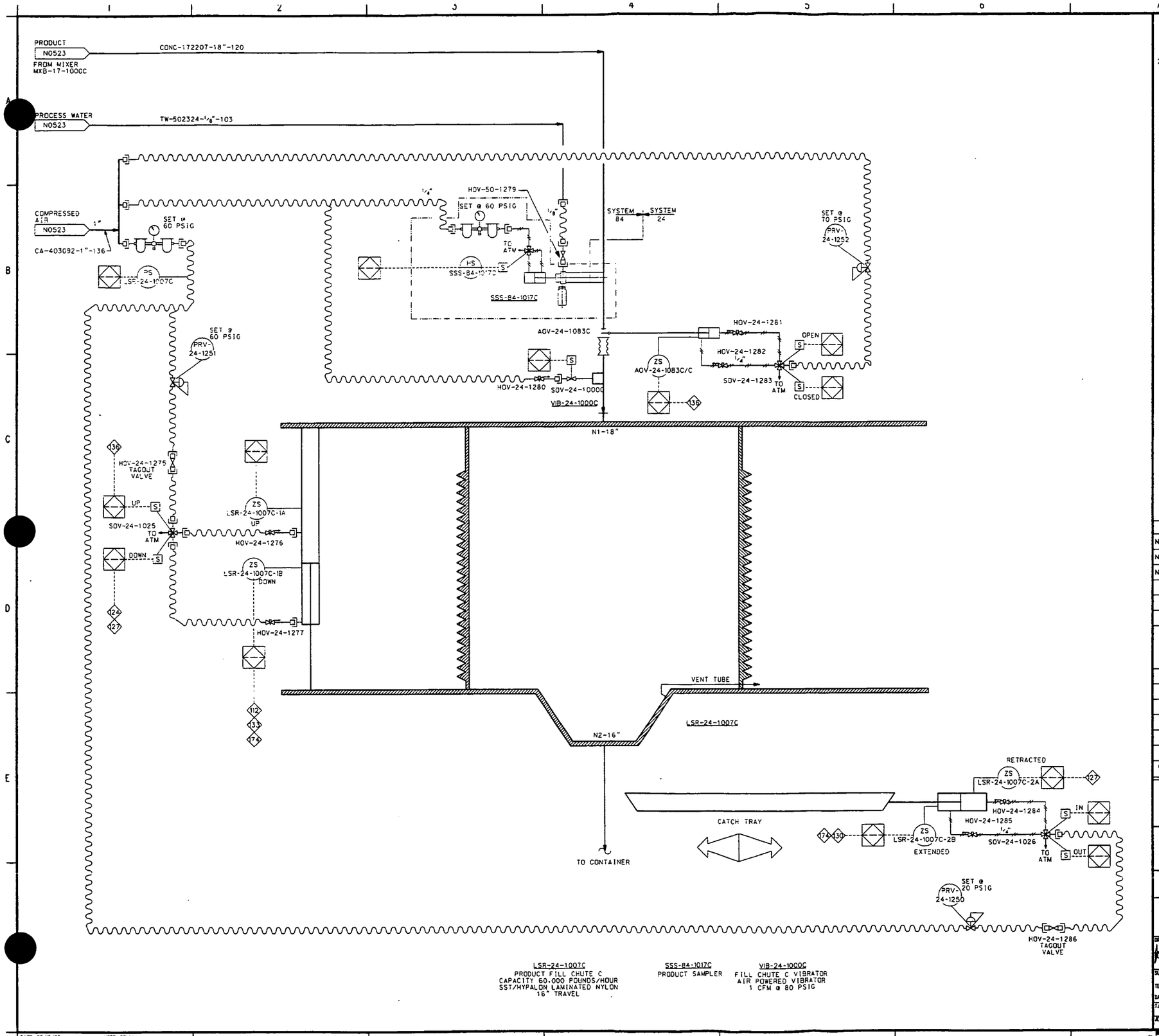

LSR-24-1007C
PRODUCT FILL CHUTE C
CAPACITY 60,000 POUNDS/HOUR
SST/HYPALON LAMINATED NYLON
16" TRAVEL

SSS-84-1017C
PRODUCT SAMPLER

VIB-24-1000C
FILL CHUTE C VIBRATOR
AIR POWERED VIBRATOR
1 CFM @ 80 PSIG

NOTES:

1. SEE SPECIFICATION ES-JME-LSR-24-1007 FOR FILL CHUTE DETAILS.
2. FOR SEQUENCE OF EVENTS SEE SHEET F0504.

INTERLOCKS:

- 112 MIXER DISCHARGE VALVE LOCKED CLOSED UNLESS A CONTAINER IS IN PLACE AND FILL CHUTE IS DEPLOYED
- 122 DO NOT DEPLOY FILL CHUTE UNLESS A CONTAINER IS IN PLACE
- 127 DO NOT DEPLOY FILL CHUTE UNLESS CATCH TRAY IS RETRACTED
- 130 DO NOT MOVE CAR FROM FILL POSITION UNTIL CATCH TRAY IS IN PLACE.
- 133 DO NOT MOVE CAR UNLESS PRODUCT FILL CHUTE IS UP.
- 136 DO NOT RETRACT FILL CHUTE IF MIXER DISCHARGE VALVE IS OPEN.
- 174 DO NOT EXTEND CATCH TRAY IF FILLCHUTE IS DEPLOYED

INFORMATION ONLY

REF DWG NO.	DRAWING TITLE
N0001	PIPING, VALVES AND MISCELLANEOUS
N0002	INSTRUMENTATION
N0003	EQUIPMENT AND MISCELLANEOUS

03-07-03

REV. NO.	ISSUE OR REVISION PURPOSE - DESCRIPTION	DATE	REV. BY	APPR
0	ISSUED TO CONSTRUCTION	02/10/03		

INITIALS AND DATE

UNITED STATES DEPARTMENT OF ENERGY
FERNALD ENVIRONMENTAL MANAGEMENT PROJECT

THIS DRAWING PREPARED BY
JACOBS
125 Broadway Ave.
Oak Ridge, Tennessee 37830
Tel: 865-220-6800
Fax: 865-220-6170

PROJECT NAME
SILOS 1 AND 2

DRAWING TITLE
INSTRUMENTATION
PIPING AND INSTRUMENT DIAGRAM
CONTAINER FILLING SYSTEM - SHEET 13 OF 13

DRAWN BY	DATE	TECHNICAL LEAD	DATE	CHECKED BY	DATE
	2/10/03		2/10/03		2/10/03

PLANT/BLDG. NO. | FLOOR | SCALE: NONE | CLASS: U

SUBMITTED FOR 30% ISSUE — TECH LEAD — DATE
SUBMITTED FOR 60% ISSUE — TECH LEAD — DATE
SUBMITTED FOR 90% ISSUE — TECH LEAD — DATE

T.O. NUMBER	PROJECT NO.	DRAWING INDEX CODE NO.	SHEET NO.	REV. NO.
N/A	40750	94X-3900-N-01405	N1102	0

JEG PROJECT NO. 35H19603 — FILENAME 94XN1405.DGN

DATE: 02/10/03 — USER: BSlobden

4822

000108

4822

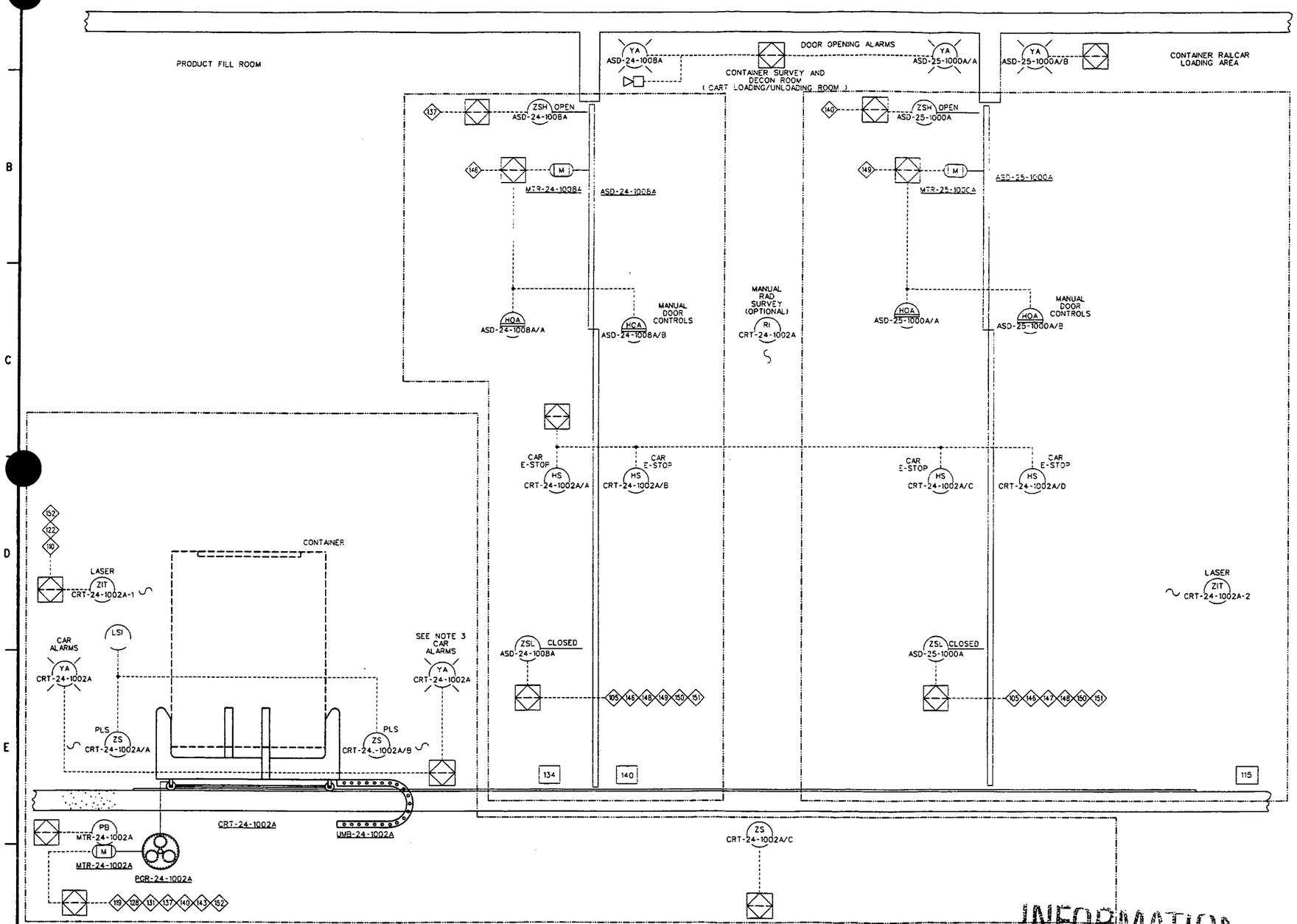

MTR-24-1002A 11 HP 480 V, 3 PH	PGR-24-1002A FILL ROOM CAR A GEARBOX 149:1 7,965 IN-LB	CRT-24-1002A FILL ROOM A CAR CAPACITY 10.5 TON CS/SST CLAD 30 FPM	UMB-24-1002A TRANSFER CAR UMBILICAL
MTR-24-1008A 1 HP 480 V, 3 PH	ASD-24-1008A PRODUCT FILL ROOM A DOOR	MTR-25-1000A 1 HP 480 V, 3 PH	ASD-25-1000A SHIPPING AREA DOOR A

NOTES:

1. SEE SPECIFICATION ES-JME-CRT-24-1002 FOR CONTAINER CAR DETAILS.
2. FOR SEQUENCE OF EVENTS SEE SHEET F0504 & F0505.
3. 5 SECOND DELAY BEFORE FILL ROOM CAR STARTS. ALARMS ARE ACTIVE DURING DELAY AND OPERATION OF FILL ROOM CAR
4. XXX BOXED NUMBERS REPRESENT ROOM NUMBERS. SEE GENERAL ARRANGEMENT DRAWING FOR ROOM LOCATIONS.

INTERLOCKS:

- 105 DO NOT OPEN ASD-23-1019 UNLESS ASD-23-1014, ASD-24-1008A/B/C/, AND ASD-25-1000A/B/C ARE CLOSED.
- 110 MIXER DISCHARGE VALVE LOCKED CLOSED UNLESS A CONTAINER IS IN PLACE AND FILL CHUTE IS DEPLOYED
- 119 DO NOT LOWER CONTAINER UNLESS TRANSFER CAR IS IN PLACE.
- 122 DO NOT DEPLOY FILL CHUTE UNLESS A CONTAINER IS IN PLACE.
- 128 DO NOT MOVE CAR FROM FILL POSITION UNTIL CATCH TRAY IS IN PLACE.
- 131 DO NOT MOVE CAR UNLESS PRODUCT FILL CHUTE IS UP
- 137 DO NOT MOVE CAR THROUGH FILL ROOM DOOR SAFETY ZONE UNLESS DOOR IS FULLY OPEN.
- 143 DO NOT MOVE CAR THROUGH SHIPPING ROOM DOOR SAFETY ZONE UNLESS DOOR IS FULLY OPEN.
- 143 DO NOT MOVE TRANSFER CAR IF MANIPULATOR IS IN OPERATION AND IN CONTROL OF CAR.
- 146 DO NOT OPEN ASD-24-1008A UNLESS ASD-23-1019, ASD-24-1008B/C AND ASD-25-1000A/B/C ARE CLOSED.
- 147 DO NOT OPEN ASD-25-1008B UNLESS ASD-23-1019, ASD-24-1008A/C AND ASD-25-1000A/B/C ARE CLOSED.
- 148 DO NOT OPEN ASD-24-1008C UNLESS ASD-23-1019, ASD-24-1008A/B AND ASD-25-1000A/B/C ARE CLOSED.
- 149 DO NOT OPEN ASD-25-1000A UNLESS ASD-23-1019, ASD-24-1008A/B/C AND ASD-25-1000B/C ARE CLOSED.
- 150 DO NOT OPEN ASD-25-1000B UNLESS ASD-23-1019, ASD-24-1008A/B/C AND ASD-25-1000A/C ARE CLOSED.
- 151 DO NOT OPEN ASD-25-1000C UNLESS ASD-23-1019, ASD-24-1008A/B/C AND ASD-25-1000A/B ARE CLOSED.
- 152 DO NOT START MANIPULATOR IN AUTOMATIC SEQUENCE WITHOUT CONTAINER IN PLACE.

REF DWG NO.	DRAWING TITLE
N0001	PIPING, VALVES AND MISCELLANEOUS
N0002	INSTRUMENTATION
N0003	EQUIPMENT AND MISCELLANEOUS

REV. NO.	ISSUE OR REVISION PURPOSE - DESCRIPTION	DATE	REV. BY	APPR.
0	ISSUED TO CONSTRUCTION	02/10/03		

INITIALS AND DATE

UNITED STATES DEPARTMENT OF ENERGY
FERNALD ENVIRONMENTAL MANAGEMENT PROJECT

THIS DRAWING PREPARED BY
JACOBS — 125 Broadway Ave., Oak Ridge, Tennessee 37830, Tel: 865-220-4800, Fax: 865-220-6170

PROJECT NAME: SILOS 1 AND 2

DRAWING TITLE: INSTRUMENTATION PIPING AND INSTRUMENT DIAGRAM CONTAINER FILLING SYSTEM - SHEET 5 OF 13

DRAWN BY	DATE	TECHNICAL LEAD	DATE	CHECKED BY	DATE
	01/10/03		2/10/03		2/10/03

UNIT/BLDG. NO. | FLOOR | SCALE: NONE | CLASS: U

SUBMITTED FOR 30% ISSUE — TECH LEAD — DATE
SUBMITTED FOR 60% ISSUE — TECH LEAD — DATE
SUBMITTED FOR 90% ISSUE — TECH LEAD — DATE

T.O. NUMBER	PROJECT NO.	DRAWING INDEX CODE NO.	SHEET NO.	REV. NO.
N/A	40750	94X-3900-N-01415	N0700	0

JES PROJECT NO. 35HT9603 — FILENAME 94XN1415.DGN

DATE: 02/10/03 — USER: BSKOOMK

000109

4822

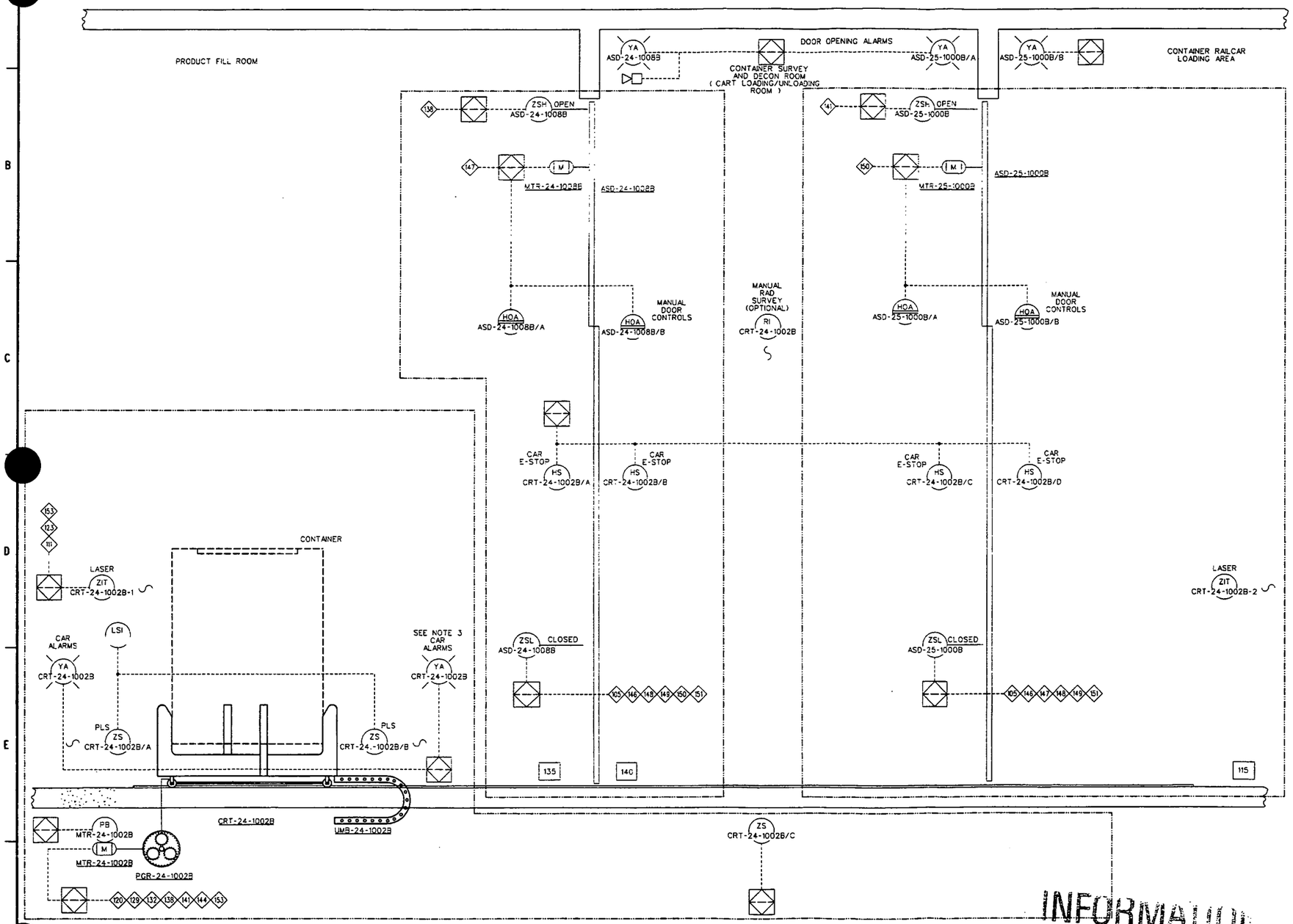

MTR-24-1002B	PGR-24-1002B	CRT-24-1002B	UMB-24-1002B
11 HP 480 V, 3 PH	FILL ROOM CAR B GEARBOX 149:1 7,965 IN-LB	FILL ROOM B CAR CAPACITY 10.5 TON CS/SST CLAD 30 FPM	TRANSFER CAR UMBILICAL

MTR-24-1008B	ASD-24-1008B	MTR-25-1000B	ASD-25-1000B
1 HP 480 V, 3 PH	PRODUCT FILL ROOM B DOOR	1 HP 480 V, 3 PH	SHIPPING AREA DOOR B

INFORMATION ONLY

NOTES:

1. SEE SPECIFICATION ES-JME-CRT-24-1002 FOR CONTAINER CAR DETAILS.
2. FOR SEQUENCE OF EVENTS SEE SHEET F0504 & F0505.
3. 5 SECOND DELAY BEFORE FILL ROOM CAR STARTS. ALARMS ARE ACTIVE DURING DELAY AND OPERATION OF FILL ROOM CAR
4. XXX BOXED NUMBERS REPRESENT ROOM NUMBERS. SEE GENERAL ARRANGEMENT DRAWING FOR ROOM LOCATIONS.

INTERLOCKS:

- 105 DO NOT OPEN ASD-23-1019 UNLESS ASD-23-1014, ASD-24-1008A/B/C/, AND ASD-25-1000A/B/C ARE CLOSED.
- 111 MIXER DISCHARGE VALVE LOCKED CLOSED UNLESS A CONTAINER IS IN PLACE AND FILL CHUTE IS DEPLOYED.
- 120 DO NOT LOWER CONTAINER UNLESS TRANSFER CAR IS IN PLACE.
- 123 DO NOT DEPLOY FILL CHUTE UNLESS A CONTAINER IS IN PLACE.
- 129 DO NOT MOVE CAR FROM FILL POSITION UNTIL CATCH TRAY IS IN PLACE.
- 132 DO NOT MOVE CAR UNLESS PRODUCT FILL CHUTE IS UP
- 138 DO NOT MOVE CAR THROUGH FILL ROOM DOOR SAFETY ZONE UNLESS DOOR IS FULLY OPEN.
- 141 DO NOT MOVE CAR THROUGH SHIPPING ROOM DOOR SAFETY ZONE UNLESS DOOR IS FULLY OPEN.
- 144 DO NOT MOVE TRANSFER CAR IF MANIPULATOR IS IN OPERATION AND IN CONTROL OF CAR.
- 146 DO NOT OPEN ASD-24-1008A UNLESS ASD-23-1019, ASD-24-1008B/C AND ASD-25-1000A/B/C ARE CLOSED.
- 147 DO NOT OPEN ASD-25-1008B UNLESS ASD-23-1019, ASD-24-1008A/C AND ASD-25-1000A/B/C ARE CLOSED.
- 148 DO NOT OPEN ASD-24-1008C UNLESS ASD-23-1019, ASD-24-1008A/B AND ASD-25-1000A/B/C ARE CLOSED.
- 149 DO NOT OPEN ASD-25-1000A UNLESS ASD-23-1019, ASD-24-1008A/B/C AND ASD-25-1000B/C ARE CLOSED.
- 150 DO NOT OPEN ASD-25-1000B UNLESS ASD-23-1019, ASD-24-1008A/B/C AND ASD-25-1000A/C ARE CLOSED.
- 151 DO NOT OPEN ASD-25-1000C UNLESS ASD-23-1019, ASD-24-1008A/B/C AND ASD-25-1000A/B ARE CLOSED.
- 153 DO NOT START MANIPULATOR IN AUTOMATIC SEQUENCE WITHOUT CONTAINER IN PLACE.

REF DWG NO.	DRAWING TITLE
N0001	PIPING, VALVES AND MISCELLANEOUS
N0002	INSTRUMENTATION
N0003	EQUIPMENT AND MISCELLANEOUS

REV. NO.	ISSUE OR REVISION PURPOSE - DESCRIPTION	DATE	REV. BY	APPR
0	ISSUED TO CONSTRUCTION	02/10/03		

INITIALS AND DATE

UNITED STATES DEPARTMENT OF ENERGY
FERNALD ENVIRONMENTAL MANAGEMENT PROJECT

THIS DRAWING PREPARED BY
JACOBS — 125 Broadway Ave. Oak Ridge, Tennessee 37830 Tel: 865-220-4600 Fax: 865-220-6170

PROJECT NAME: SILOS 1 AND 2

DRAWING TITLE
INSTRUMENTATION
PIPING AND INSTRUMENT DIAGRAM
CONTAINER FILLING SYSTEM - SHEET 6 OF 13

DRAWN BY	DATE	TECHNICAL LEAD	DATE	CHECKED BY	DATE
	02/10/03		2/10/03		2/10/03

PLANT/BLDG. NO.	FLOOR	SCALE	CLASS
		NONE	U

SUBMITTED FOR 30% ISSUE	SUBMITTED FOR 60% ISSUE	SUBMITTED FOR 90% ISSUE
TECH LEAD	TECH LEAD	TECH LEAD
DATE	DATE	DATE

T.O. NUMBER	PROJECT NO.	DRAWING INDEX CODE NO.	SHEET NO.	REV. NO.
N/A	40750	94X-3900-N-01416	N0701	0

JEC PROJECT NO.	FILENAME
35H19603	94XN1416.DGN

000110

DATE: 02/10/03
TIME: 09:47 PM
USER: BSlobbek
DESIGN FILE: h:\proj\monitoring\drawings\94xn1416.dgn

4822

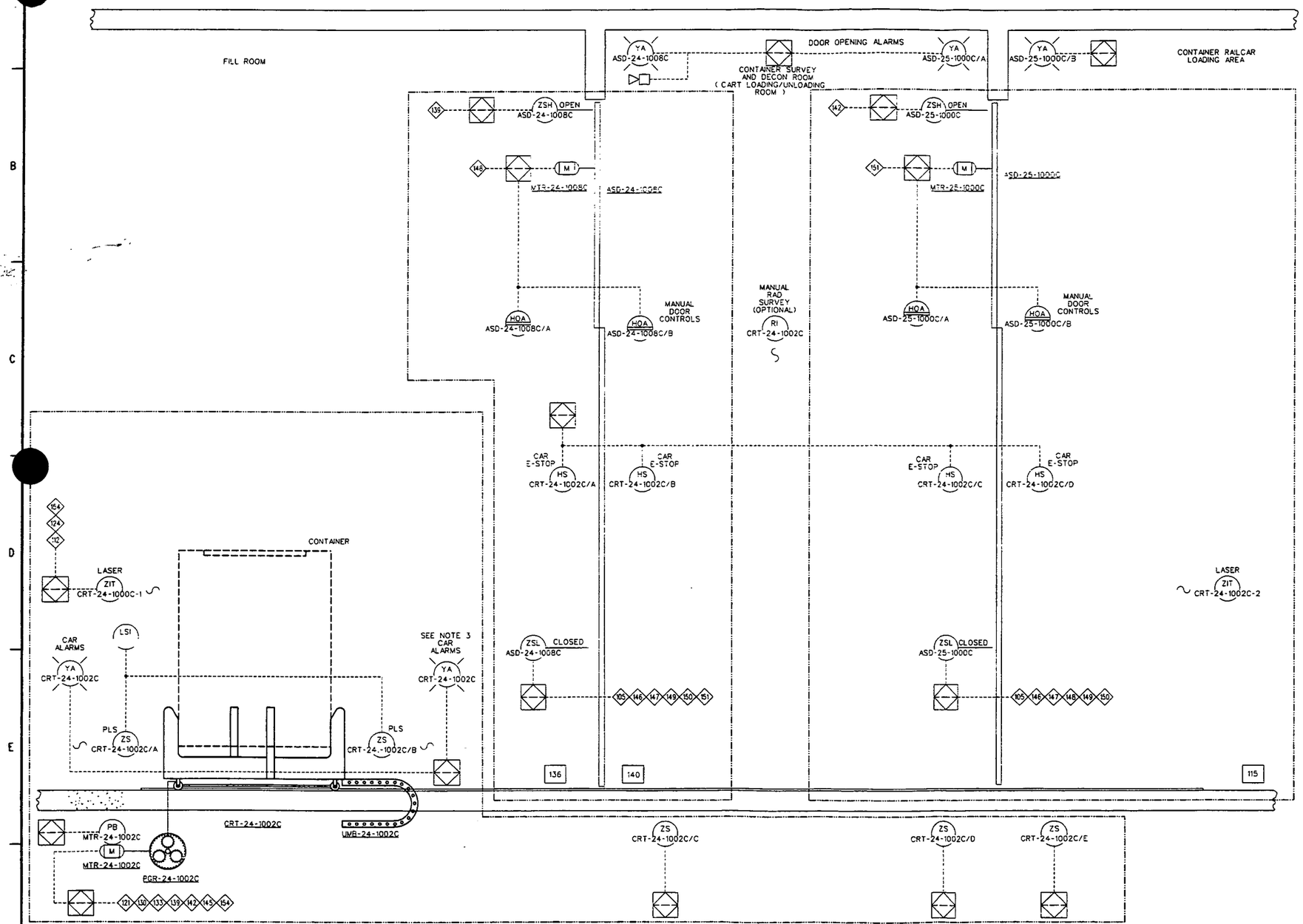

MTR-24-1002C 11 HP 480 V, 3 PH	PGR-24-1002C FILL ROOM CAR C GEARBOX 149:1 7,965 IN-LB	CRT-24-1002C FILL ROOM C CAR CAPACITY 10.5 TON CS/SST CLAD 30 FPM	UMB-24-1002C TRANSFER CAR UMBILICAL	MTR-24-1008C 1 HP 480 V, 3 PH
ASD-24-1008C PRODUCT FILL ROOM C DOOR	MTR-25-1000C 1 HP 480 V, 3 PH	ASD-25-1000C SHIPPING AREA DOOR C		

NOTES:

1. SEE SPECIFICATION ES-JME-CRT-24-1002 FOR CONTAINER CAR DETAILS.
2. FOR SEQUENCE OF EVENTS SEE SHEET F0504 & F0505.
3. 5 SECOND DELAY BEFORE FILL ROOM CAR STARTS. ALARMS ARE ACTIVE DURING DELAY AND OPERATION OF FILL ROOM CAR.
4. XXX BOXED NUMBERS REPRESENT ROOM NUMBERS. SEE GENERAL ARRANGEMENT DRAWING FOR ROOM LOCATIONS.

INTERLOCKS:

105 DO NOT OPEN ASD-23-1019 UNLESS ASD-23-1014, ASD-24-1008A/B/C/, AND ASD-25-1000A/B/C ARE CLOSED.

112 MIXER DISCHARGE VALVE LOCKED CLOSED UNLESS A CONTAINER IS IN PLACE AND FILL CHUTE IS DEPLOYED.

121 DO NOT LOWER CONTAINER UNLESS TRANSFER CAR IS IN PLACE.

124 DO NOT DEPLOY FILL CHUTE UNLESS A CONTAINER IS IN PLACE.

130 DO NOT MOVE CAR FROM FILL POSITION UNTIL CATCH TRAY IS IN PLACE.

133 DO NOT MOVE CAR UNLESS PRODUCT FILL CHUTE IS UP

139 DO NOT MOVE CAR THROUGH FILL ROOM DOOR SAFETY ZONE UNLESS DOOR IS FULLY OPEN.

142 DO NOT MOVE CAR THROUGH SHIPPING ROOM DOOR SAFETY ZONE UNLESS DOOR IS FULLY OPEN.

145 DO NOT MOVE TRANSFER CAR IF MANIPULATOR IS IN OPERATION AND IN CONTROL OF CAR.

146 DO NOT OPEN ASD-24-1008A UNLESS ASD-23-1019, ASD-24-1008B/C AND ASD-25-1000A/B/C ARE CLOSED.

147 DO NOT OPEN ASD-25-1008B UNLESS ASD-23-1019, ASD-24-1008A/C AND ASD-25-1000A/B/C ARE CLOSED.

148 DO NOT OPEN ASD-24-1008C UNLESS ASD-23-1019, ASD-24-1008A/B AND ASD-25-1000A/B/C ARE CLOSED.

149 DO NOT OPEN ASD-25-1000A UNLESS ASD-23-1019, ASD-24-1008A/B/C AND ASD-25-1000B/C ARE CLOSED.

150 DO NOT OPEN ASD-25-1000B UNLESS ASD-23-1019, ASD-24-1008A/B/C AND ASD-25-1000A/C ARE CLOSED.

151 DO NOT OPEN ASD-25-1000C UNLESS ASD-23-1019, ASD-24-1008A/B/C AND ASD-25-1000A/B ARE CLOSED.

154 DO NOT START MANIPULATOR IN AUTOMATIC SEQUENCE WITHOUT CONTAINER IN PLACE.

REF DWG NO.	DRAWING TITLE
N0001	PIPING, VALVES AND MISCELLANEOUS
N0002	INSTRUMENTATION
N0003	EQUIPMENT AND MISCELLANEOUS

Not Approved for Construction
03-03-03

REV. NO.	ISSUE OF REVISION PURPOSE - DESCRIPTION	DATE	REV. BY	APPR
0	ISSUED TO CONSTRUCTION	02/10/03		

DETAILS AND DATE

UNITED STATES DEPARTMENT OF ENERGY
FERNALD ENVIRONMENTAL MANAGEMENT PROJECT

THIS DRAWING PREPARED BY
JE JACOBS 125 Broadway Ave. Oak Ridge, Tennessee 37830 Tel: 865-220-4800 Fax: 865-220-6170

PROJECT NAME: SILOS 1 AND 2

DRAWING TITLE
INSTRUMENTATION
PIPING AND INSTRUMENT DIAGRAM
CONTAINER FILLING SYSTEM - SHEET 7 OF 13

DRAWN BY	DATE	TECHNICAL LEAD	DATE	CHECKED BY	DATE
	02/10/03		2/10/03		2/10/03

PLANT/BLDG. NO. | FLOOR | SCALE: NONE | CLASS: U

SUBMITTED FOR 30% ISSUE: TECH LEAD ____ DATE ____
SUBMITTED FOR 60% ISSUE: TECH LEAD ____ DATE ____
SUBMITTED FOR 90% ISSUE: TECH LEAD ____ DATE ____

T.O. NUMBER	PROJECT NO.	DRAWING INDEX CODE NO.	SHEET NO.	REV. NO.
N/A	40750	94X-3900-N-01417	N0702	0

JES PROJECT NO. 35H19603 | FILENAME 94XN1417.DGN

DATE: 02/10/03 | USER: BSabbak

000111

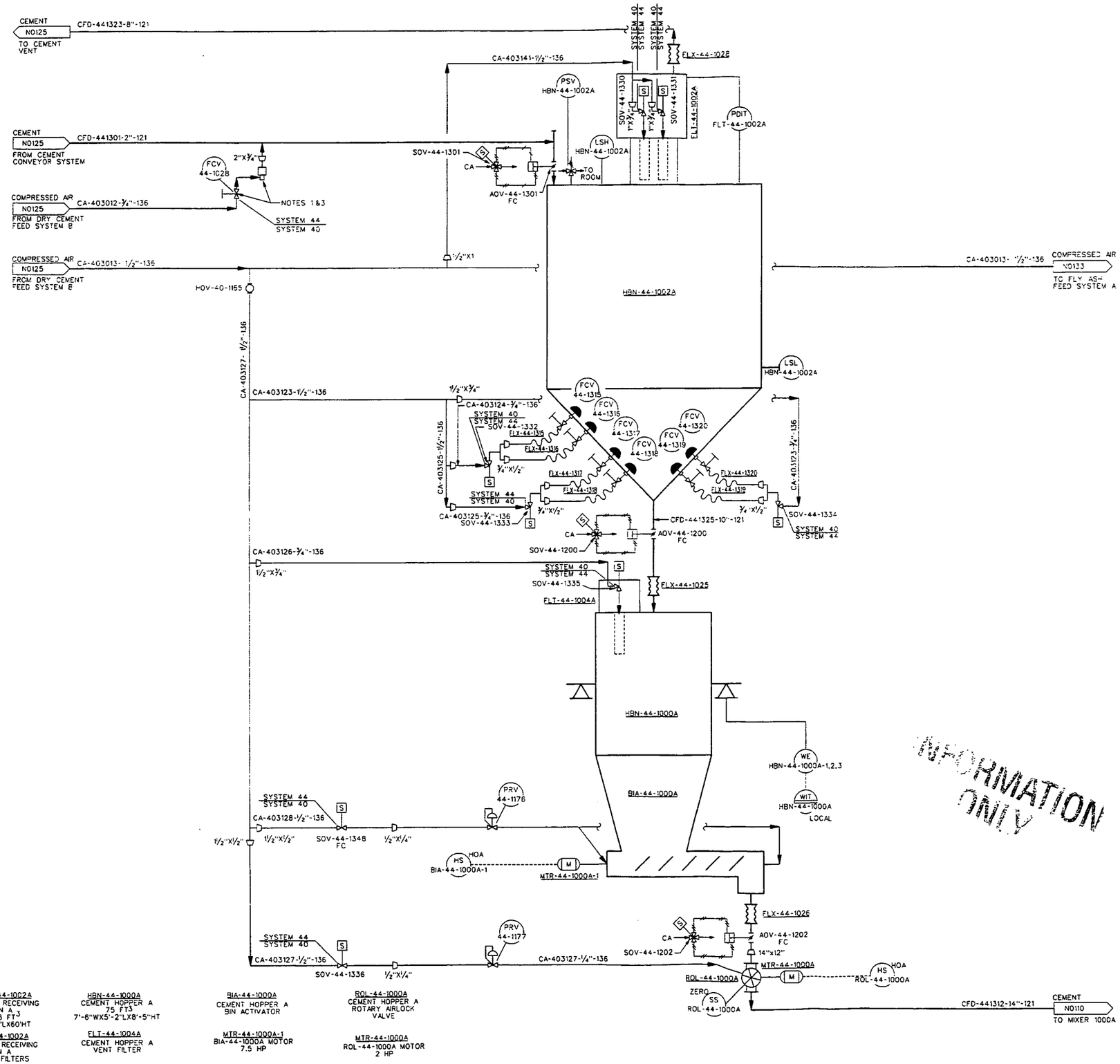

INFORMATION ONLY

NOTES:

1. BOOSTER CONNECTIONS ARE SPACED AT 5' TO 10' INTERVALS ALONG CONVEYING LINE (VENDOR SUPPLIED WITH EQUIPMENT).
2. SEE P&ID N0132 FOR PRV VALVE NUMBERING AT CEMENT BOOSTER CONNECTIONS.
3. THE PLC FOR THIS EQUIPMENT IS VENDOR SUPPLIED. I/O TAGS AND INTERLOCK INFORMATION TO BE PROVIDED ON FUTURE REVISION.

INTERLOCKS:

REF DWG NO.	DRAWING TITLE
N0001	PIPING, VALVES AND MISCELLANEOUS
N0002	INSTRUMENTATION
N0003	EQUIPMENT AND MISCELLANEOUS

REV NO.	ISSUE OR REVISION PURPOSE - DESCRIPTION	DATE	REV. BY	APPR.
0	ISSUED TO CONSTRUCTION	02/10/03	SJC	GCS

INITIALS AND DATE

UNITED STATES DEPARTMENT OF ENERGY
FERNALD ENVIRONMENTAL MANAGEMENT PROJECT

THIS DRAWING PREPARED BY
JE JACOBS 125 Broadway Ave. Oak Ridge, Tennessee 37830 Tel: 865-220-4200 Fax: 865-220-6170

PROJECT NAME: SILOS 1 AND 2

DRAWING TITLE: INSTRUMENTATION PIPING AND INSTRUMENT DIAGRAM MIXER DRY CEMENT FEED SYSTEM A

DRAWN BY	DATE	TECHNICAL LEAD	DATE	CHECKED BY	DATE
M.T.S	2/10/03	Bill Nicholson	2/10/03	S.J.C.	2/10/03

PLANT/BLDG. NO.	FLOOR	SCALE	CLASS
		NTS	U

SUBMITTED FOR 30% ISSUE	SUBMITTED FOR 60% ISSUE	SUBMITTED FOR 90% ISSUE
TECH LEAD	TECH LEAD	TECH LEAD
DATE	DATE	DATE

T.A. NUMBER	PROJECT NO.	DRAWING INDEX CODE NO.	SHEET NO.	REV. NO.
N/A	40750	94X-3900-N-01419	N0124	0
JEG PROJECT NO. 35H19603	FILENAME 94XH419.DGN			

HBN-44-1002A
CEMENT RECEIVING BIN A
36 FT³
3'WX3'LX60'HT

FLT-44-1002A
CEMENT RECEIVING BIN A VENT FILTERS

HBN-44-1000A
CEMENT HOPPER A
75 FT³
7'-6"WX5'-2"LX8'-5"HT

FLT-44-1004A
CEMENT HOPPER A VENT FILTER

BIA-44-1000A
CEMENT HOPPER A BIN ACTIVATOR

MTR-44-1000A-1
BIA-44-1000A MOTOR
7.5 HP

ROL-44-1000A
CEMENT HOPPER A ROTARY AIRLOCK VALVE

MTR-44-1000A
ROL-44-1000A MOTOR
2 HP

DATE: 02/09/03
USER: KenYMA

4822

000112

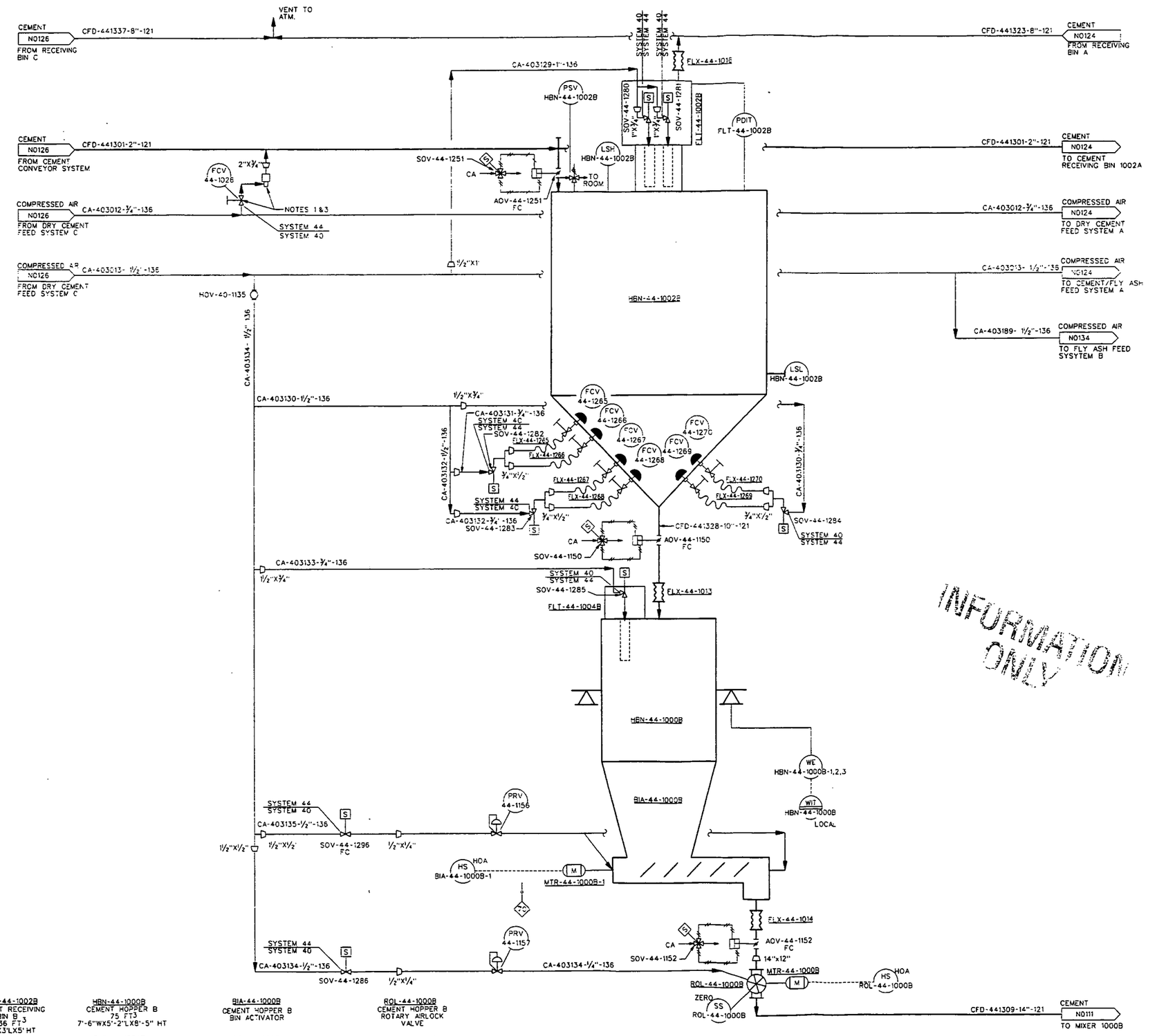

INFORMATION ONLY

HBN-44-1002B
CEMENT RECEIVING BIN B
36 FT³
3'WX3'LX5' HT

FLT-44-1002B
CEMENT RECEIVING BIN B
VENT FILTERS

HBN-44-1000B
CEMENT HOPPER B
75 FT³
7'-6"WX5'-2"LX8'-5" HT

FLT-44-1004B
CEMENT HOPPER B
VENT FILTER

BIA-44-1000B
CEMENT HOPPER B
BIN ACTIVATOR

MTR-44-1000B-1
BIA-44-1000B MOTOR
7.5 HP

ROL-44-1000B
CEMENT HOPPER B
ROTARY AIRLOCK VALVE

MTR-44-1000B
ROL-44-1000B MOTOR
2 HP

NOTES:

1. BOOSTER CONNECTIONS ARE SPACED AT 5' TO 10' INTERVALS ALONG CONVEYING LINE (VENDOR SUPPLIED WITH EQUIPMENT).
2. SEE P&ID N0132 FOR PRV VALVE NUMBERING AT CEMENT BOOSTER CONNECTIONS.
3. THE PLC FOR THIS EQUIPMENT IS VENDOR SUPPLIED. I/O TAGS AND INTERLOCK INFORMATION TO BE PROVIDED ON FUTURE REVISION.

INTERLOCKS:

REF DWG NO.	DRAWING TITLE
N0001	PIPING, VALVES AND MISCELLANEOUS
N0002	INSTRUMENTATION
N0003	EQUIPMENT AND MISCELLANEOUS

REV. NO.	ISSUE OR REVISION PURPOSE - DESCRIPTION	DATE	REV. BY	APPD
0	ISSUED TO CONSTRUCTION	02/10/03		GCS

INITIALS AND DATE

UNITED STATES DEPARTMENT OF ENERGY
FERNALD ENVIRONMENTAL MANAGEMENT PROJECT

THIS DRAWING PREPARED BY
JACOBS
123 Broadway Ave.
Oak Ridge, Tennessee 37830
Tel: 865-220-0900
Fax: 865-220-6170

PROJECT NAME
SILOS 1 AND 2

DRAWING TITLE
INSTRUMENTATION
PIPING AND INSTRUMENT DIAGRAM
MIXER DRY CEMENT FEED SYSTEM B

DRAWN BY	DATE	TECHNICAL LEAD	DATE	CHECKED BY	DATE
M. Chase	2/10/03	Bill Nelson	2/10/03	S. Cope	2/10/03

PLANT/BLDG. NO.	FLOOR	SCALE	CLASS
		NTS	U

SUBMITTED FOR 30% ISSUE	SUBMITTED FOR 60% ISSUE	SUBMITTED FOR 90% ISSUE
TECH LEAD	TECH LEAD	TECH LEAD
DATE	DATE	DATE

T.O. NUMBER	PROJECT NO.	DRAWING INDEX CODE NO.	SHEET NO.	REV. NO.
N/A	40750	94X-3900-N-01420	N0125	0

JES PROJECT NO.	FILENAME
35H19603	94X01420.DGN

4822

000113

DATE: 02/09/03 USER: KeithM4

4822

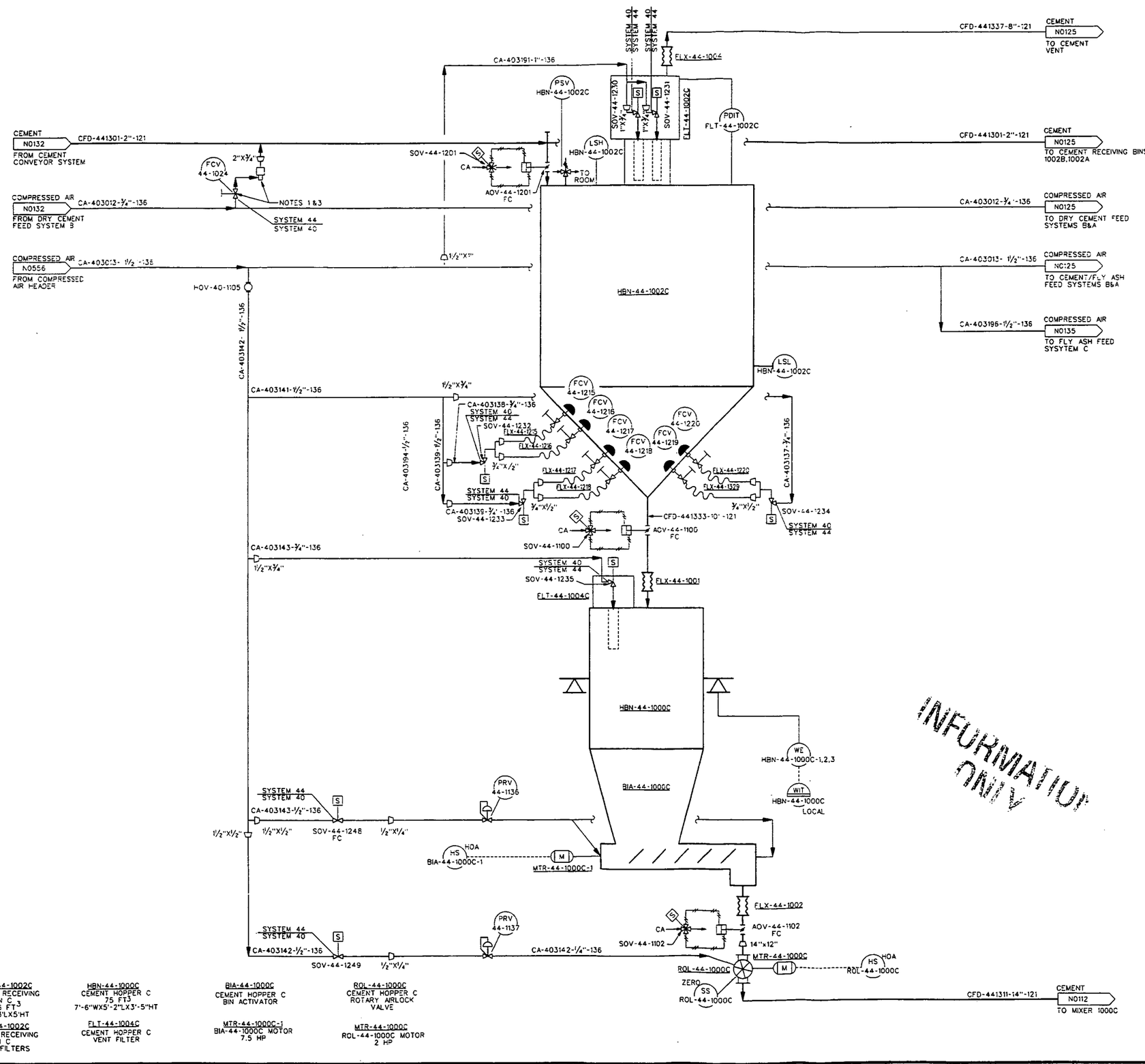

INFORMATION ONLY

HBN-44-1002C
CEMENT RECEIVING BIN C-3
36 FT3
3'WX3'LX5'HT

FLT-44-1002C
CEMENT RECEIVING BIN C VENT FILTERS

HBN-44-1000C
CEMENT HOPPER C
75 FT3
7'-6"WX5'-2"LX3'-5"HT

FLT-44-1004C
CEMENT HOPPER C VENT FILTER

BIA-44-1000C
CEMENT HOPPER C BIN ACTIVATOR

MTR-44-1000C-1
BIA-44-1000C MOTOR
7.5 HP

ROL-44-1000C
CEMENT HOPPER C ROTARY ARLOCK VALVE

MTR-44-1000C
ROL-44-1000C MOTOR
2 HP

NOTES:

1. BOOSTER CONNECTIONS ARE SPACED AT 5' TO 10' INTERVALS ALONG CONVEYING LINE (VENDOR SUPPLIED WITH EQUIPMENT).
2. SEE P&ID N0132 FOR PRV VALVE NUMBERING AT CEMENT BOOSTER CONNECTIONS.
3. THE PLC FOR THIS EQUIPMENT IS VENDOR SUPPLIED. I/O TAGS AND INTERLOCK INFORMATION TO BE PROVIDED ON FUTURE REVISION.

INTERLOCKS:

REF DWG NO.	DRAWING TITLE
N0001	PIPING, VALVES AND MISCELLANEOUS
N0002	INSTRUMENTATION
N0003	EQUIPMENT AND MISCELLANEOUS

REV. NO.	ISSUE OR REVISION PURPOSE - DESCRIPTION	DATE	REV. BY	APPR.
0	ISSUED TO CONSTRUCTION	02/10/03		

INITIALS AND DATE

UNITED STATES DEPARTMENT OF ENERGY
FERNALD ENVIRONMENTAL MANAGEMENT PROJECT

THIS DRAWING PREPARED BY
JACOBS
125 Broadway Ave.
Oak Ridge, Tennessee 37830
Tel: 865-220-1400
Fax: 865-220-6170

PROJECT NAME
SILOS 1 AND 2

DRAWING TITLE
INSTRUMENTATION
PIPING AND INSTRUMENT DIAGRAM
MIXER DRY CEMENT FEED SYSTEM C

DRAWN BY	DATE	TECHNICAL LEAD	DATE	CHECKED BY	DATE
	2/10/03		2/10/03		2/10/03

PLANT/BLDG. NO.	FLOOR	SCALE	CLASS
		NTS	U

SUBMITTED FOR 30% ISSUE — TECH LEAD — DATE
SUBMITTED FOR 60% ISSUE — TECH LEAD — DATE
SUBMITTED FOR 90% ISSUE — TECH LEAD — DATE

T.O. NUMBER	PROJECT NO.	DRAWING INDEX CODE NO.	SHEET NO.	REV. NO.
N/A	40750	94X-3900-N-01421	N0126	0

JEC PROJECT NO. 35H19603 — FILENAME 94XN1421.DGN

DATE: 02/09/03 USER: KENYMA

000114

4822

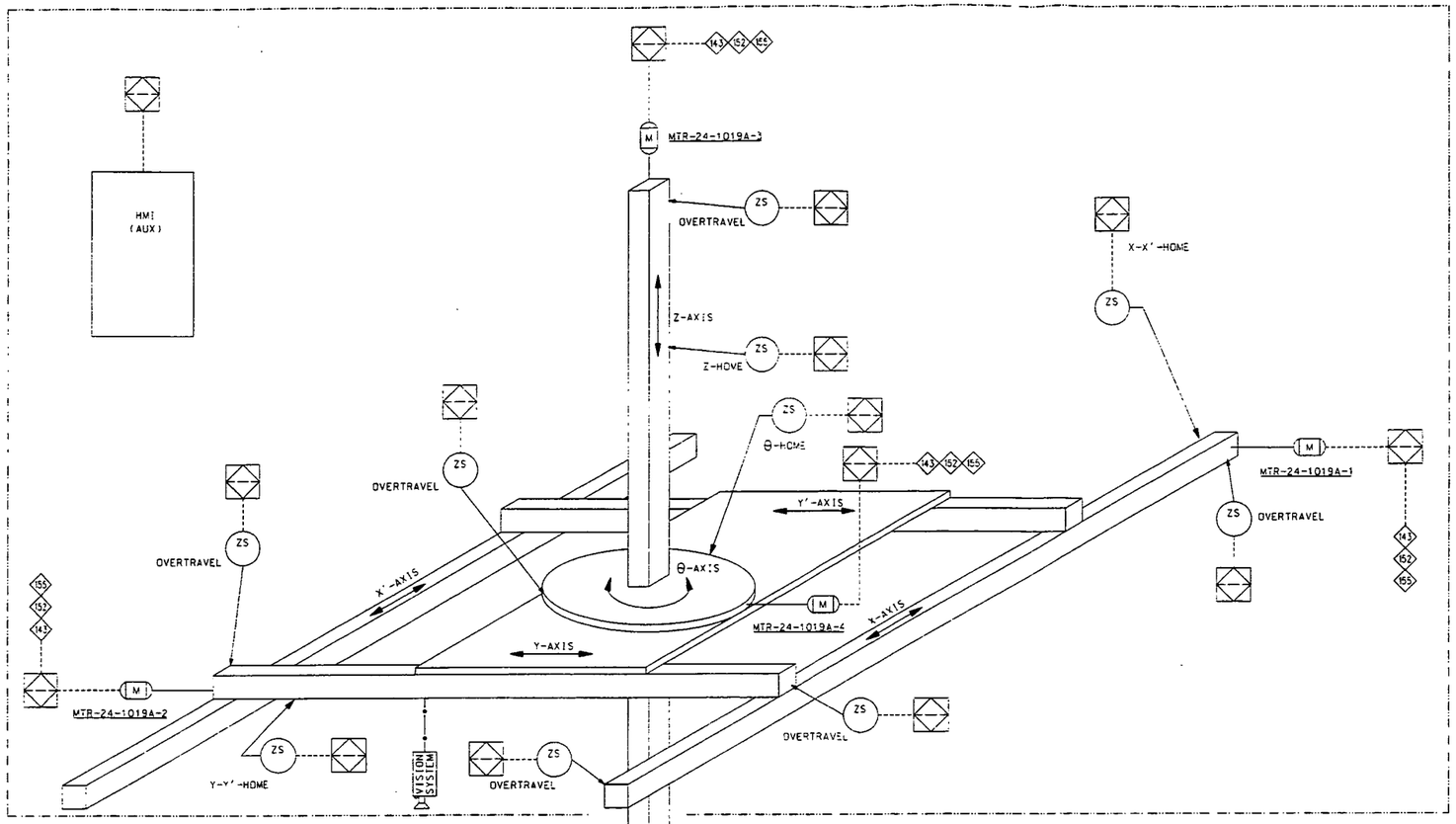

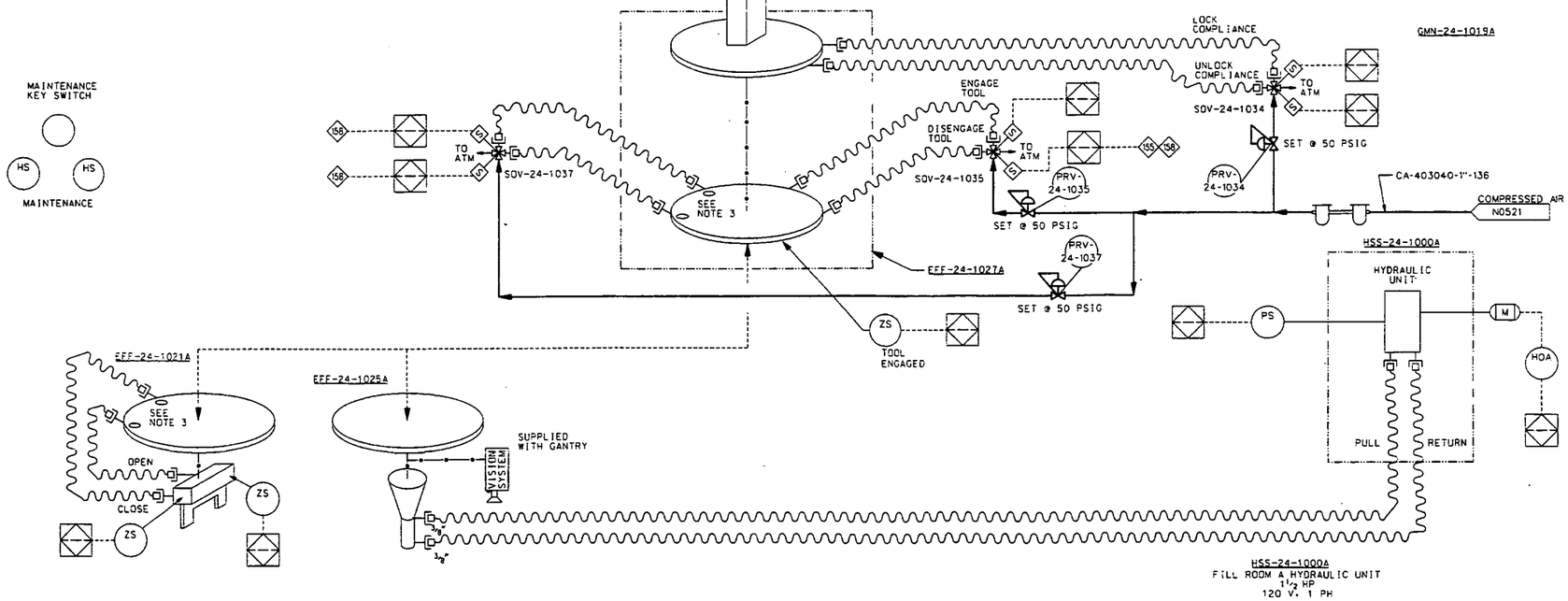

EFF-24-1021A
LID GRIPPER
END EFFECTOR

EFF-24-1025A
RIVETER
END EFFECTOR

EFF-24-1027A
TOOL CHANGER
END EFFECTOR

GMN-24-1019A
FILL ROOM &
GANTRY MANIPULATOR
6 HP EQUIV
480V 3 PH

MTR-24-1019A-1
GANTRY MANIPULATOR
X-AXIS DRIVE MOTOR
2 HP
240V. 3 PH

MTR-24-1019A-2
GANTRY MANIPULATOR
Y-AXIS DRIVE MOTOR
2 HP
240V. 3 PH

MTR-24-1019A-3
GANTRY MANIPULATOR
Z-AXIS DRIVE MOTOR
2 HP
240V. 3 PH

MTR-24-1019A-4
GANTRY MANIPULATOR
θ -AXIS DRIVE MOTOR
2 HP
240V. 3 PH

NOTES:

1. SEE SPECIFICATION ES-JME-GMN-24-1019 FOR GANTRY MANIPULATOR DETAILS.
2. FOR SEQUENCE OF EVENTS SEE SHEET F0504.
3. AIR PORTS TRANSFER COMPRESSED AIR FROM TOOL CHANGER END EFFECTOR TO END EFFECTOR.

INTERLOCKS:

- 143 DO NOT MOVE TRANSFER CAR IF MANIPULATOR IS IN OPERATION, AND IN CONTROL OF CAR.
- 152 DO NOT START MANIPULATOR AUTOMATED SEQUENCE WITHOUT CONTAINER IN PLACE.
- 155 DO NOT DISENGAGE TOOL CHANGER ASSEMBLY UNLESS MANIPULATOR IS POSITIONED OVER APPROPRIATE TOOL CLUSTER.
- 158 BLOCK SOV-24-1037 PRIOR TO UNLOCKING TOOL EXCHANGE.

INFORMATION ONLY

REF DWG NO.	DRAWING TITLE
N0001	PIPING, VALVES AND MISCELLANEOUS
N0002	INSTRUMENTATION
N0003	EQUIPMENT AND MISCELLANEOUS

REV. NO.	ISSUE OR REVISION PURPOSE - DESCRIPTION	DATE	REV. BY	APPR.
0	ISSUED TO CONSTRUCTION	02/10/03		

INITIALS AND DATE

UNITED STATES DEPARTMENT OF ENERGY
FERNALD ENVIRONMENTAL MANAGEMENT PROJECT

THIS DRAWING PREPARED BY
JACOBS
125 Broadway Ave. Oak Ridge, Tennessee 37830 Tel: 865-220-6600 Fax: 865-220-6170

PROJECT NAME
SILOS 1 AND 2

DRAWING TITLE
INSTRUMENTATION
PIPING AND INSTRUMENT DIAGRAM
CONTAINER FILLING SYSTEM - SHEET 8 OF 13

DRAWN BY	DATE	TECHNICAL LEAD	DATE	CHECKED BY	DATE
	2/10/03		2/10/03		2/10/03

PLANT/BLDG. NO.	FLOOR	SCALE	CLASS
		NONE	U

SUBMITTED FOR 30% ISSUE	SUBMITTED FOR 60% ISSUE	SUBMITTED FOR 90% ISSUE
TECH LEAD	TECH LEAD	TECH LEAD
DATE	DATE	DATE

T.O. NUMBER	PROJECT NO.	DRAWING INDEX CODE NO.	SHEET NO.	REV. NO.
N/A	40750	94X-3900-N-01822	N0800	0

JEC PROJECT NO. 35H19603 FILENAME 94XN1822.DGN

000115

DATE: 02/19/03 USER: BSkobbek

4822

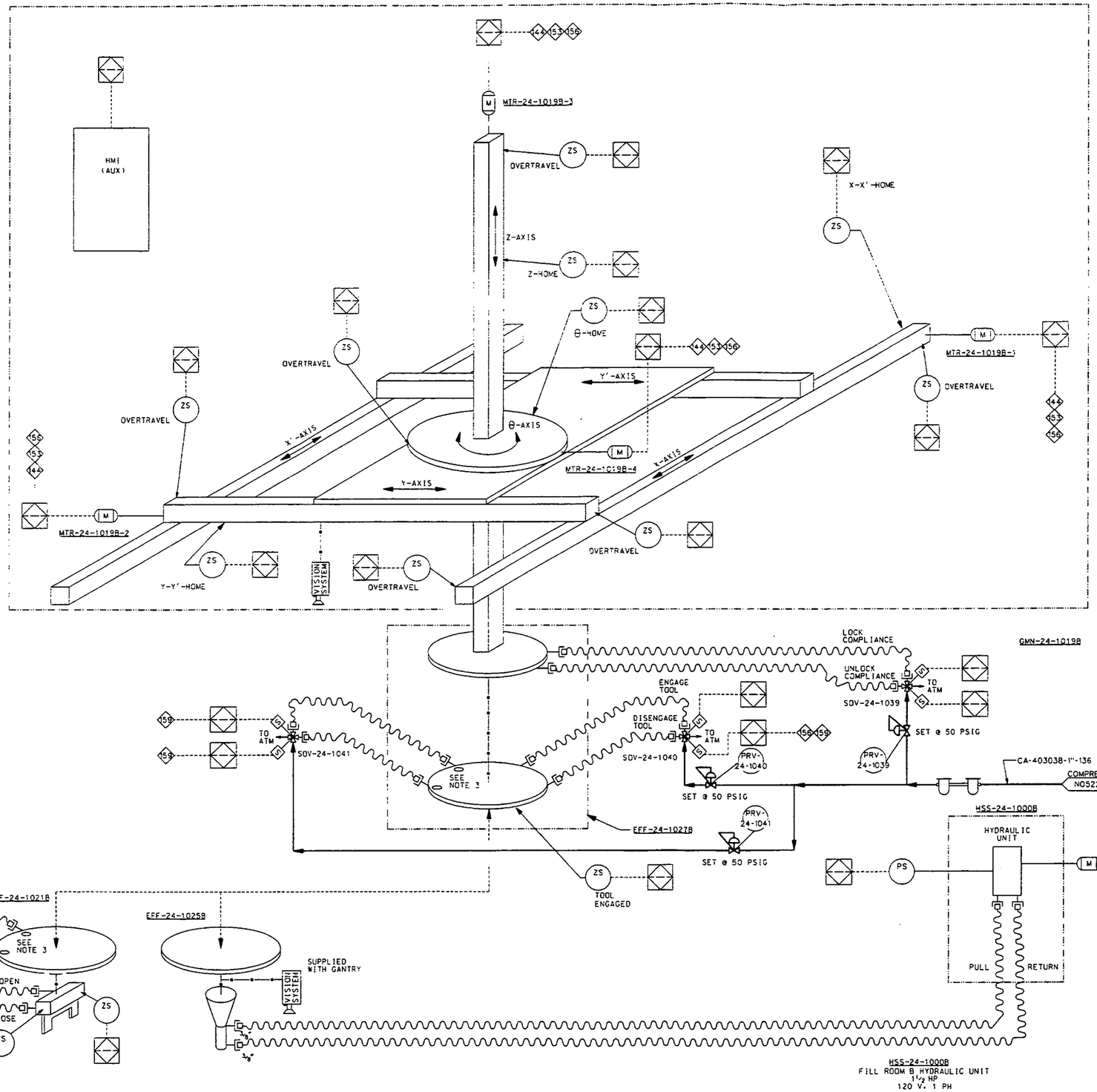

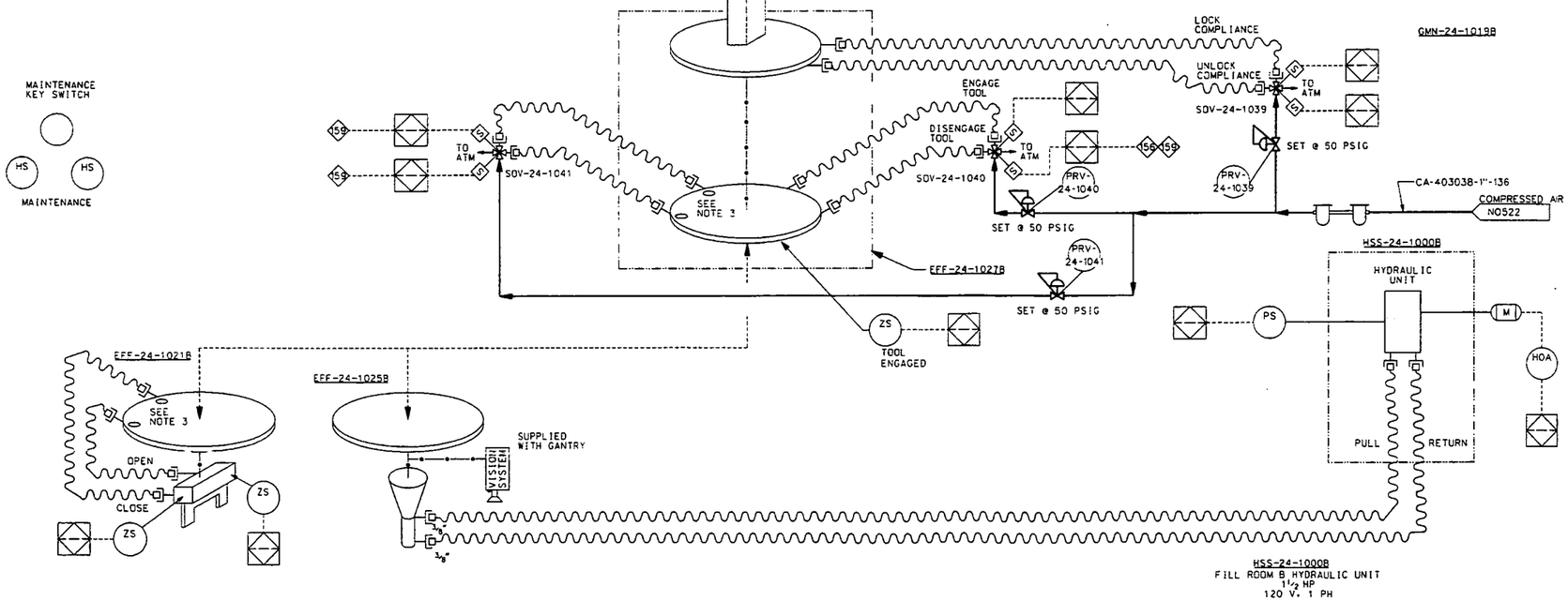

NOTES:

1. SEE SPECIFICATION ES-JME-GMN-24-1019 FOR GANTRY MANIPULATOR DETAILS.
2. FOR SEQUENCE OF EVENTS SEE SHEET F0504.
3. AIR PORTS TRANSFER COMPRESSED AIR FROM TOOL CHANGER END EFFECTOR TO END EFFECTOR.

INTERLOCKS:

144 DO NOT MOVE TRANSFER CAR IF MANIPULATOR IS IN OPERATION, AND IN CONTROL OF CAR.

153 DO NOT START MANIPULATOR IN AUTOMATIC SEQUENCE WITHOUT CONTAINER IN PLACE.

156 DO NOT DISENGAGE TOOL CHANGER ASSEMBLY UNLESS MANIPULATOR IS POSITIONED OVER APPROPRIATE TOOL HOLSTER.

159 BLOCK SOV-24-1039 PRIOR TO UNLOCKING TOOL EXCHANGE.

INFORMATION ONLY

REF DWG NO.	DRAWING TITLE
N0001	PIPING, VALVES AND MISCELLANEOUS
N0002	INSTRUMENTATION
N0003	EQUIPMENT AND MISCELLANEOUS

REV. NO.	ISSUE OR REVISION PURPOSE - DESCRIPTION	DATE	REV. BY	APPR.
0	ISSUED TO CONSTRUCTION	02/10/03		

INITIALS AND DATE

UNITED STATES DEPARTMENT OF ENERGY
FERNALD ENVIRONMENTAL MANAGEMENT PROJECT

THIS DRAWING PREPARED BY
JE JACOBS 135 Broadway Ave., Oak Ridge, Tennessee 37830 Tel: 865-220-4800 Fax: 865-220-6170

PROJECT NAME: SILOS 1 AND 2

DRAWING TITLE
INSTRUMENTATION
PIPING AND INSTRUMENT DIAGRAM
CONTAINER FILLING SYSTEM - SHEET 9 OF 13

DRAWN BY	DATE	TECHNICAL LEAD	DATE	CHECKED BY	DATE
	2/10/03		2/10/03		2/10/03

PLANT/BLDG. NO. | FLOOR | SCALE: NONE | CLASS: U

SUBMITTED FOR 30% ISSUE — TECH LEAD — DATE
SUBMITTED FOR 60% ISSUE — TECH LEAD — DATE
SUBMITTED FOR 90% ISSUE — TECH LEAD — DATE

T.O. NUMBER	PROJECT NO.	DRAWING INDEX CODE NO.	SHEET NO.	REV. NO.
N/A	40750	94X-3900-N-01823	N0801	0

JEG PROJECT NO. 35H19603 | FILENAME 94XN1823.DGN

EFF-24-1021B	LID GRIPPER END EFFECTOR	
EFF-24-1025B	RIVETER END EFFECTOR	
EFF-24-1027B	TOOL CHANGER END EFFECTOR	
GMN-24-1019B	FILL ROOM B GANTRY MANIPULATOR 6 HP EQUIV	
MTR-24-1019B-1	GANTRY MANIPULATOR X-AXIS DRIVE MOTOR 2 HP 240V, 3 PH	
MTR-24-1019B-2	GANTRY MANIPULATOR Y-AXIS DRIVE MOTOR 2 HP 240V, 3 PH	
MTR-24-1019B-3	GANTRY MANIPULATOR Z-AXIS DRIVE MOTOR 2 HP 240V, 3 PH	
MTR-24-1019B-4	GANTRY MANIPULATOR θ-AXIS DRIVE MOTOR 2 HP 240V, 3 PH	
HSS-24-1000B	FILL ROOM B HYDRAULIC UNIT 1½ HP 120 V, 1 PH	

DATE: 02/09/03 USER: BSlaboak

000116

4822

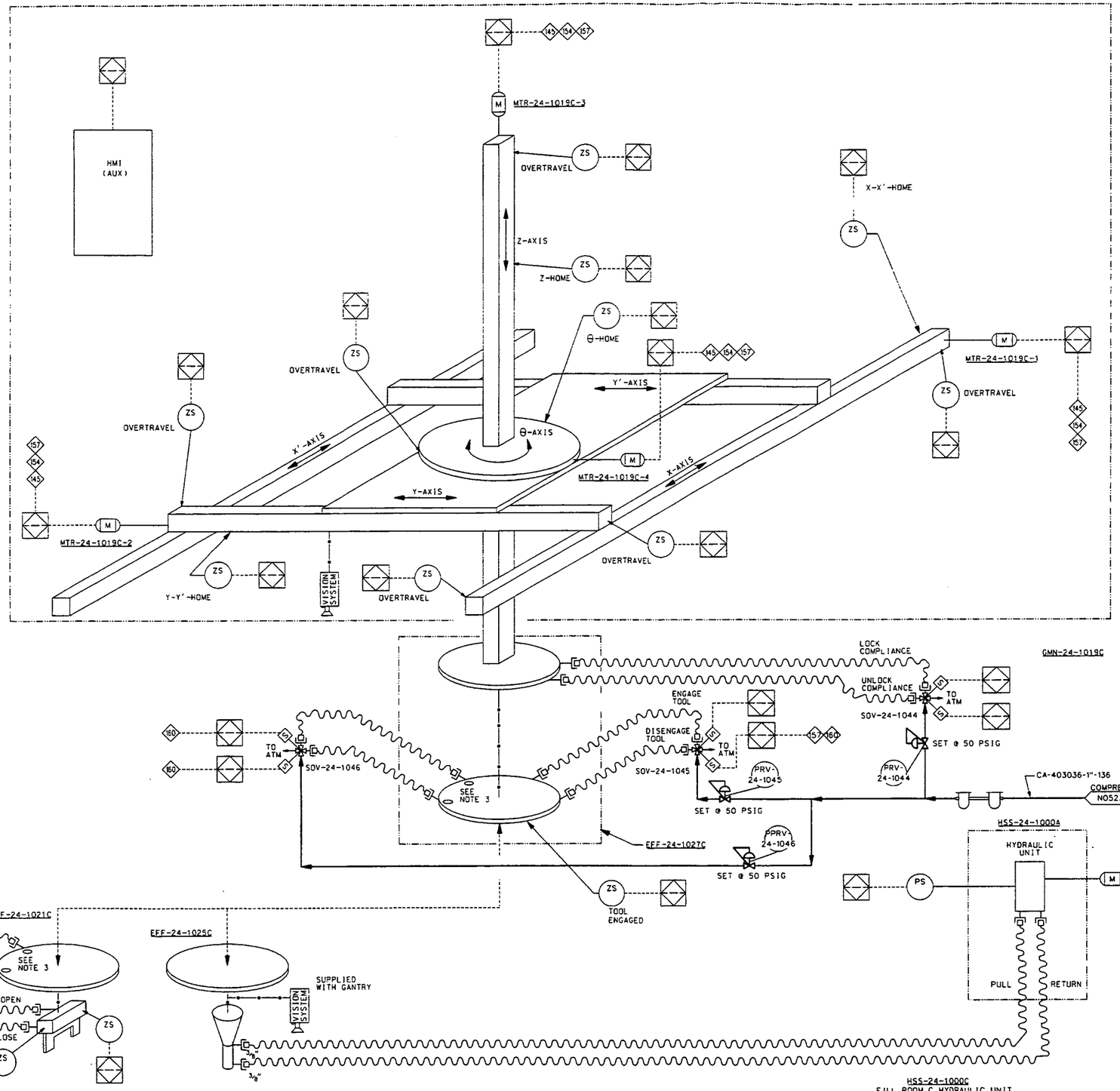

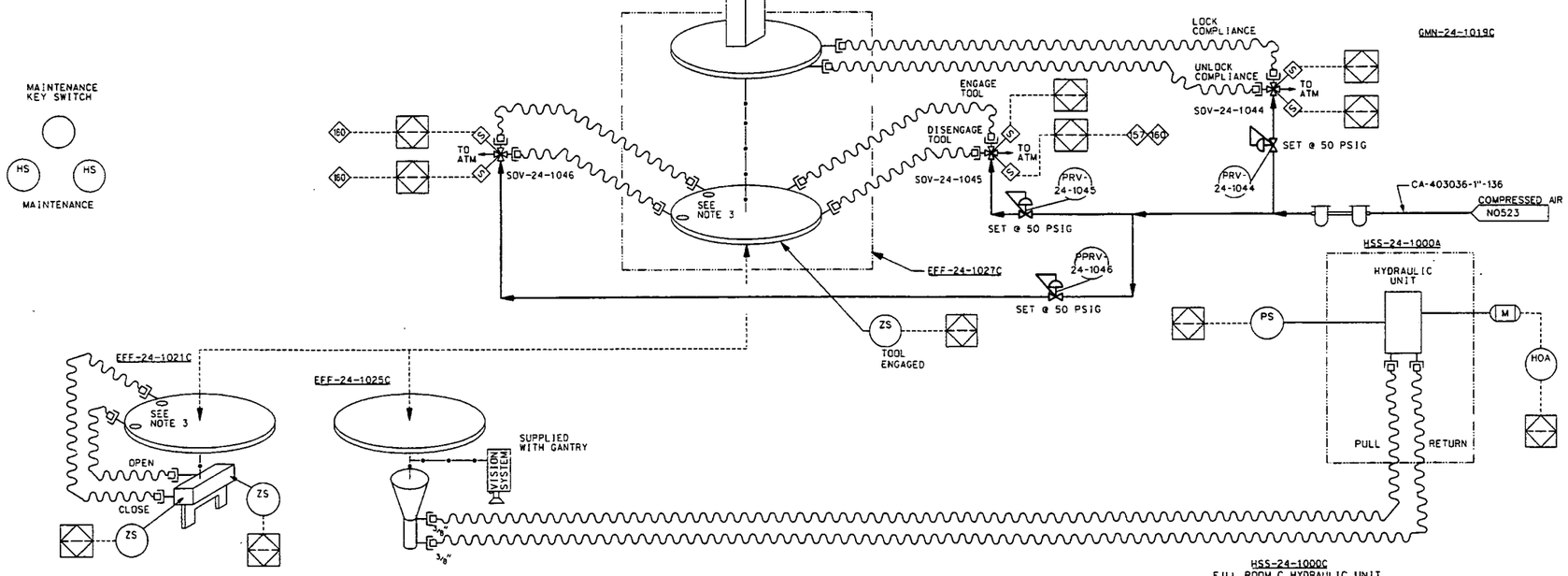

NOTES:

1. SEE SPECIFICATION ES-JME-GMN-24-1019 FOR GANTRY MANIPULATOR DETAILS.
2. FOR SEQUENCE OF EVENTS SEE SHEET F0504.
3. AIR PORTS TRANSFER COMPRESSED AIR FROM TOOL CHANGER END EFFECTOR TO END EFFECTOR.

INTERLOCKS:

- 145 DO NOT MOVE TRANSFER CAR IF MANIPULATOR IS IN OPERATION. AND IN CONTROL OF CAR.
- 154 DO NOT START MANIPULATOR IN AUTOMATIC SEQUENCE WITHOUT CONTAINER IN PLACE.
- 157 DO NOT DISENGAGE TOOL CHANGER ASSEMBLY UNLESS MANIPULATOR IS POSITIONED OVER APPROPRIATE TOOL HOLSTER.
- 160 BLOCK SOV-24-1044 PRIOR TO UNLOCKING TOOL EXCHANGE.

INFORMATION ONLY

REF DWG NO.	DRAWING TITLE
N0001	PIPING, VALVES AND MISCELLANEOUS
N0002	INSTRUMENTATION
N0003	EQUIPMENT AND MISCELLANEOUS

REV. NO.	ISSUE OR REVISION PURPOSE - DESCRIPTION	DATE	REV. BY	APPR.
0	ISSUED TO CONSTRUCTION	02/10/03		

INITIALS AND DATE

UNITED STATES DEPARTMENT OF ENERGY
FERNALD ENVIRONMENTAL MANAGEMENT PROJECT

THIS DRAWING PREPARED BY
JACOBS
175 Broadway Ave. Oak Ridge, Tennessee 37830 Tel: 865-220-5800 Fax: 865-220-6170

PROJECT NAME
SILOS 1 AND 2

DRAWING TITLE
INSTRUMENTATION
PIPING AND INSTRUMENT DIAGRAM
CONTAINER FILLING SYSTEM - SHEET 10 OF 13

DRAWN BY	DATE	TECHNICAL LEAD	DATE	CHECKED BY	DATE
	2/10/03				2/10/03

UNIT/BLDG. NO.	FLOOR	SCALE	CLASS
		NONE	U

SUBMITTED FOR 30% ISSUE	SUBMITTED FOR 60% ISSUE	SUBMITTED FOR 90% ISSUE
TECH LEAD	TECH LEAD	TECH LEAD
DATE	DATE	DATE

T.O. NUMBER	PROJECT NO.	DRAWING INDEX CODE NO.	SHEET NO.	REV. NO.
N/A	40750	94X-3900-N-01824	N0802	0
JCE PROJECT NO. 35H19603	FILENAME 94X01824.DGN			

000117

EFF-24-1021C	LID GRIPPER END EFFECTOR	
EFF-24-1025C	RIVETER END EFFECTOR	
EFF-24-1027C	TOOL CHANGER END EFFECTOR	
GMN-24-1019C	FILL ROOM C GANTRY MANIPULATOR 6 HP EQUIV	
MTR-24-1019C-1	GANTRY MANIPULATOR X-AXIS DRIVE MOTOR 2 HP 240V. 3 PH	
MTR-24-1019C-2	GANTRY MANIPULATOR Y-AXIS DRIVE MOTOR 2 HP 240V. 3 PH	
MTR-24-1019C-3	GANTRY MANIPULATOR Z-AXIS DRIVE MOTOR 2 HP 240V. 3 PH	
MTR-24-1019C-4	GANTRY MANIPULATOR Θ-AXIS DRIVE MOTOR 2 HP 240V. 3 PH	

DATE: 02/19/03 USER: B5ddbak