OVERSIZE PAGES

LOCATED AT

END OF

DOCUMENT

EG+G-22-09-10-01-02
#9407200005

F - OU2
B-BLDG

EG&G MOUND APPLIED TECHNOLOGIES
P.O. BOX 3000 MIAMISBURG, OHIO 45343-3000 • TEL (513) 865-4020

JUN 2 1994

Mr. Arthur W. Kleinrath
Environmental Engineer
U. S. Department of Energy
Dayton Area Office
P.O. Box 66
Miamisburg, OH 45343

Dear Mr. Kleinrath:

B-Building Solvent Storage Shed Area

This letter serves to transmit a copy, for your information, of the Interim Remedial Action Workplan and the Health and Safety Plan for the B-Building Solvent Storage Shed Area. One additional copy has also been delivered to the U.S. and Ohio EPA offices.

Should you have any questions concerning this submittal, please feel free to contact Gary Coons at (513) 865-3867 or myself at (513) 865-4543.

Very truly yours,

Monte Williams
Manager, ER/CERCLA

Approved: Charles S. Friedman
Charles S. Friedman
Vice President
ER, WM & D&D

MAW/sdf
Enclosure

cc: Gary Coons

22-09 -10 -01 -02 -9407200005

Environmental Restoration Program

INTERIM REMEDIAL ACTION WORKPLAN FOR OPERABLE UNIT 2 B BUILDING SOLVENT STORAGE SHED AREA

MOUND PLANT
MIAMISBURG, OHIO

May 1994

FINAL

(Revision 0)

Prepared for

EG&G MOUND APPLIED TECHNOLOGIES
P.O. Box 3000
Miamisburg, Ohio 45343

Prepared by

ICF KAISER ENGINEERS
4501 Erskine Road - Suite 100
Cincinnati, Ohio 45242

CONTENTS

ACRONYMS v

1. INTRODUCTION 1-1
   1.1. Soil Vapor Extraction System Objectives 1-5
   1.2. Interim Remedial Action Decision Making 1-6
   1.3. Report Organization 1-6
   1.4. Other Interim Remedial Action Documents 1-8

2. SITE CHARACTERIZATION 2-1
   2.1. Site Description 2-1
   2.2. B Building Solvent Storage Shed and Temporary Drum Storage Area 2-1

3. PROJECT ORGANIZATION AND RESPONSIBILITIES 3-1
   3.1. Field Team Responsibilities 3-1
   3.2. Management Responsibilities 3-1

4. SOIL VAPOR EXTRACTION SYSTEM INSTALLATION 4-1
   4.1. Preconstruction Activities 4-1
      4.1.1. Preconstruction Conference 4-1
      4.1.2. Mound Training 4-1
      4.1.3. Identify Utility Locations 4-3
      4.1.4. Preliminary Site Visit 4-3
      4.1.5 Mobilization 4-3
   4.2. System Overview 4-3
   4.3 Methods 4-4
      4.3.1. Installation of Vadose Zone Wells 4-4
         4.3.1.2. Drill Cuttings 4-7
         4.3.1.3. Borehole Logging 4-9
         4.3.1.4. Well Construction Logs 4-9
         4.3.1.5 Water Level Measurements 4-9
         4.3.1.6 Soil Sampling 4-9
   4.4 System Design 4-10
      4.4.1. Air Conduit Network Assembly 4-10
      4.4.2. Treatment Area Cover 4-10
      4.4.3. Soil Probes 4-10
      4.4.4. SVE Pump Station 4-11
      4.4.5. Electrical Installation 4-15
      4.4.6. Off-Gas VOC Control 4-16
      4.4.7. Sample Collection and Measurements 4-17
   4.5. Permitting 4-17
   4.6. Schedule, Personnel, and Equipment Requirements 4-18

5. THIRTY DAY PILOT STUDY 5-1
   5.1. Pilot Study Operation 5-1
   5.2. Pilot Study Data Analysis 5-2
   5.3. Reporting 5-4

6. SCHEDULE 6-1

7. REFERENCES 7-1

APPENDICES

Appendix A Quality Assurance Project Plan
Appendix B Field Sampling Plan
Appendix C Operation and Maintenance Plan
Appendix D Permit to Install and Permit to Operate

FIGURES

2.1. Site Location Map 2-2
2.2. Main Hill Area and Buildings at Mound Plant 2-3

4.1. Underground Utility Locations 4-2
4.2. Initial Treatment Configuration 4-5
4.3. Alternate Treatment Configuration 4-6
4.4. Well Construction Diagram 4-8
4.5. SVE Pump System Process and Instrument Diagram - Open Loop Configuration 4-12
4.6. SVE Pump System Process and Instrument Diagram - Closed Loop Configuration 4-13

6.1. SVE Construction, Operation, and Reporting Schedule 6-2

TABLES

1.1. Conceptual Probable Conditions, Durations, and Contingency Plans for SVE at B Building Solvent Storage Shed Area 1-7

5.1. Soil Vapor Sampling Schedule 5-2

ACRONYMS

AEA	Atomic Energy Act
ASCII	American Standard Code for Information Interchange
ASME	American Society of Mechanical Engineers
ASTM	American Society of Testing and Materials
BG	Below Ground
CEARP	Comprehensive Environmental Assessment and Response Program
CERCLA	Comprehensive Environmental Response, Compensation, and Liability Act
CLP	Contract Laboratory Program
CPR	Cardio-Pulmonary Resuscitation
CFR	Code of Federal Regulations
CMP	Construction Management Plan
DAO	Dayton Area Office
DCE	Dichloroethene
DOE	Department of Energy
DOE AL	Department of Energy, Albuquerque Field Office
DQOs	Data Quality Objectives
EE/CA	Engineering Evaluation/Cost Analysis
EG&G MAT	EG&G Mound Applied Technologies
EPA	Environmental Protection Agency
ER	Environmental Restoration
FFA	Federal Facilities Agreement
FID	Flame Ionization Detector
FS	Feasibility Study
FSP	Field Sample Plan
GC	Gas Chromatography
GC/MS	Gas Chromatography/Mass Spectrometry
HP	Horse Power
ICF KE	ICF Kaiser Engineers
ID	Internal Diameter
IRA	Interim Remedial Action
MRC	Monsanto Research Corporation
NBS	National Bureau of Standards
NEC	National Electrical Code
NEPA	National Environmental Policy Act
NIST	National Institute of Standards and Technology
NPL	National Priorities List
OEPA	Ohio Environmental Protection Agency

PID	Photoionization Detector
PPM	Parts Per Million
PTI	Permit to Install
PTO	Permit to Operate
PVC	Polyvinyl Chloride
QA	Quality Assurance
QAMS	Quality Assurance Management Section
QAO	Quality Assurance Officer
QAPjP	Quality Assurance Project Plan
QAPP	Quality Assurance Program Plan
QC	Quality Control
RCRA	Resource Conservation and Recovery Act
RD	Remedial Design
RI	Remedial Investigation
RPM	Remedial Project Manager
SAFER	Streamlined Approach for Environmental Restoration
SARA	Superfund Amendments and Reauthorization Act
SIDN	Sample Identification Number
SOP	Standard Operating Procedure
SOW	Statement of Work
SVE	Soil Vapor Extraction
TCA	Trichloroethane
TCE	Trichloroethene
UV	Ultra-Violet
VOC	Volatile Organic Compound

1. INTRODUCTION

The presence of volatile organic compounds (VOCs) in the vadose soils at the EG&G Mound Applied Technologies (EG&G MAT) B Building Solvent Storage Shed Area at the Mound Plant in Miamisburg, Ohio has been verified during a soil gas survey in 1992. The contaminants of concern include Freon 113, Trans-1,2-Dichloroethene (trans-12DCE), Cis-1,2-Dichloroethene (cis-12DCE), 1,1,1-Trichloroethane (111TCA), Trichloroethene (TCE), and Toluene.

Because of the elevated concentrations of soil vapor, EG&G MAT has decided to conduct a removal action as an interim remedial action. This removal action is being conducted under the Department of Energy (DOE) Streamlined Approach for Environmental Restoration (SAFER) program. The goal of the SAFER program is to design and conduct faster, cheaper, better and safer environmental restorations.

EG&G MAT conducted a soil gas survey in 1992 at the Mound Plant. Target compounds included Freon 113, trans-12DCE, cis-12DCE, 111TCA, TCE, and Toluene. These compounds were chosen based upon results from previous contaminant characterization efforts. During the survey, elevated levels of target compounds were detected in the B Building Solvent Storage Shed Area.

Due to the elevated levels of the target compounds, EG&G MAT proceeded with a removal action as part of an interim remedial action. The regulatory basis for the action us discussed in the following paragraphs.

The B Building solvent storage shed area had received waste solvent from B Building and also stored product-grade solvents. Waste solvent was pumped from B Building into sealed 55-gallon drums in the storage shed through automatic discharge hoses equipped with automatic shutoff devices. Before the shed was built, solvents were stored within the B Building, typically in 5-gallon cans.

The B Building temporary drum storage area was an outdoor unit located adjacent to the B Building solvent storage shed. Storage began in this area in 1988. It was intended for temporary storage. The shed area was approximately 15 feet on each side. The area to be remediated is approximately 110 feet by 50 feet.

A diagrammatic layout of the area is found in Figure 2.2.

Section VII.D of the 1990 Federal Facilities Agreement (FFA) indicates that nothing in the FFA shall alter the Department of Energy's (DOE) authority with respect to removal actions conducted pursuant to Section 104 of the Comprehensive Environmental Response, Compensation and Liability Act (CERCLA) as amended by the Superfund Amendments and Reauthorization Act (SARA). Section 104.(a)(1) of CERCLA as amended grants the following response authorities:

> Whenever (A) any hazardous substances is released or there is a substantial threat of such a release into the environment, or (B) there is a release or substantial threat of release into the environment of any pollutant or contaminant which may present an imminent and substantial danger to the public health or welfare, the President is authorized to act, consistent with the national contingency plan, to remove or arrange for the removal of, and provide for remedial action relating to such hazardous substance, pollutant, or contaminant at any time (including its removal from any contaminated natural resource), or take any other response measure consistent with the national contingency plan which the President deems necessary to protect the public health or welfare or the environment.

Executive Order 12580 delegates to the DOE authority to conduct emergency and non-emergency removal actions with respect to releases or threatened releases from DOE facilities; thus, wherever CERCLA refers to the President's authority, that authority has been delegated to the Secretary of Energy for DOE facilities.

Section 104.(a)(2) of CERCLA, as amended, states that "any removal action undertaken by the President under this subsection (or by any other person referred to in section 122) should, to the extent the President deems practicable, contribute to the efficient performance of any long-term remedial action with respect to the release or threatened release concerned."

In the FFA, DOE agreed to conduct IRAs. Section VI.J of the FFA defines IRAs as follows:

> "Interim Remedial Actions" or "IRA" shall mean all discrete response actions implemented prior to a final remedial action which are consistent with the final remedial action and which are taken to prevent or minimize the release of hazardous substance, pollutants or contaminants so that they do not migrate or endanger public health, welfare or the environment.

Both removal actions and IRAs are response actions implemented prior to a final remedial action, and both must be consistent with the final remedial action. Accordingly, removal actions undertaken by DOE under the authority granted by Section 1049(a)(1) of CERCLA, as amended, and Executive Order 12580; and performed according to 40 CFR 300.415, shall be referred to as IRAs throughout the remainder of this report.

Subpart E of the National Contingency Plan (NCP) establishes methods and criteria for determining the appropriate extent of response authorized by CERCLA when there is a release of a hazardous substance into the environment or there is a release into the environment of any pollutant or contaminant that may present an imminent and substantial danger to the public health or welfare (40 CFR 300.400(a)). Limitations on appropriate responses are established by 40 CFR 300.400(b):

> Unless the lead agency determines that a release constitutes a public health or environmental emergency and no other person with the authority and capability to respond will do so in a timely manner, a removal or remedial action under Section 10 of CERCLA shall not be undertaken in response to a release:
>
> (1) Of a naturally occurring substance in its unaltered form, or altered solely through naturally occurring processes or phenomena, from a location where it is naturally found;
>
> (2) From products that are part of the structure, and result in exposure within, residential buildings or business or community structures; or
>
> (3) Into public or private drinking water supplies due to deterioration of the system through ordinary use.

On April 20, 1993, ICF Kaiser Engineers (ICF KE) submitted an IRA Technical Memorandum to EG&G Mound Applied Technologies (EG&G MAT) and the Dayton Area Office (DAO) of DOE. The purpose of the technical memorandum was to:

- Identify and document justification for implementation of an IRA at the B Building solvent storage shed area;
- Present the necessary steps required to properly plan and implement the IRA and provide an initial estimate of associated costs; and,
- Provide EG&G MAT and DOE sufficient information pertaining to estimated costs and schedule for funding purposes.

Based on existing site information pertaining to past waste management practices and previous investigations, the technical memorandum showed that a release of a hazardous substance had occurred in the B Building solvent storage shed area, and that the CERCLA response limitations outlined above did not apply, therefore, DOE was justified in proceeding with a removal site evaluation. The technical memorandum was similar in content and served the function of an EE/CA approval memorandum and served as the Removal Site Evaluation under 40 CFR 300.410.

The technical memorandum evaluated the following factors that should be considered when determining the appropriateness of a removal action as outlined by 40 CFR 300.415(b)(2):

(i) Actual or potential exposure to nearby human populations, animals, or the food chain from hazardous substances or pollutants or contaminants.

(ii) Actual or potential contamination of drinking water supplies or sensitive ecosystems.

(iii) Hazardous substances or pollutants or contaminants in drums, barrels, tanks, or other bulk storage containers, that may pose a threat of release.

(iv) High levels of hazardous substances or pollutants or contaminants in soils largely at or near the surface which may migrate.

(v) Weather conditions that may cause hazardous substances or pollutants or contaminants to migrate or be released.

(vi) Threat of fire or explosion.

(vii) The availability of other appropriate federal or state response mechanisms to respond to the release.

(viii) Other situations or factors that may pose threats to public health or welfare or the environment.

The presence of soil containing elevated volatile organic compound concentrations in the area of the B Building solvent storage shed may, at a minimum, satisfy factors i and iv; thus, implementation of a removal action or IRA is appropriate. The overall objective of the IRA is to mitigate the migration of organic chemicals into the groundwater. As indicated in 40 CFR 300.415(b)(4), whenever a planning period of at least six months exists before on-site activities must be initiated, and the lead agency determines, based on a site evaluation, that a removal action is appropriate, the lead agency shall conduct an EE/CA.

At Mound facility, DOE is the lead agency, and DAO is its authorized representative. ICF KE was authorized by DAO to prepare the B Building Solvent Storage Shed EE/CA Report on August 10, 1993. The Draft (Revision 1) EE/CA Report was delivered to the respective agencies on October 22, 1993. DAO's response to USEPA comments were transmitted to both USEPA and OEPA on January 7, 1994. At that time DAO informed USEPA and OEPA that the removal has had less than a six month planning period and was being continued as a Time-Critical Removal Action. The EE/CA processes ended at that time. This Action Memorandum provides a written record of the decision to select Soil Vapor Extraction as the preferred IRA alternative for the B Building solvent storage shed area.

This document is intended to serve the specific purpose of presenting the necessary steps required to implement a removal action at the B Building Solvent Storage Shed Area at the EG&G Mound Applied Technologies facility in Miamisburg, Ohio.

1.1. SOIL VAPOR EXTRACTION SYSTEM OBJECTIVES

The goal of the SVE system is to recover VOCs from the vadose zone treatment area to decrease the contaminants of concern below remedial goals. Specific recovery system procedures to meet these goals for the SVE include the following:

- Install air injection and withdrawal wells throughout the proposed treatment area.
- Place a fluid flow-resistant cover over the treatment areas not covered with concrete or asphalt in fluid flow restrictive condition.
- Connect the air wells to a VAPORTECH® pumping station via horizontal piping located primarily above.
- Remove VOCs from the soils by establishing air flows through the contaminated soils (injecting VOC-free air in a portion of the vertical wells and withdrawing contaminated air from the balance of the wells).
- Enhance bioremediation of VOCs in the soil by providing oxygen to indigenous micro-organisms.
- Pass process air and entrained contaminant vapors through an activated vapor phase carbon treatment unit.
- Periodically monitor system performance and/or modify equipment operation to optimize recovery effectiveness.

The scope of work for the project includes installation of up to 17 SVE wells, placement of a site cap, installation of up to 12 soil probes and connection of the SVE wells to a SVE pump station. The system will be operated for 30 days, during which a pneumatic conductivity test will be performed and the system operation will be optimized. Based on the results of the pilot test, modifications will be made in preparation of full scale operation. The system will be operated for 6 months following the pilot test.

Other tasks involved in the project include the following (DOE, 1994b):

- Production of this Work Plan;
- Construction of the SVE system;
- Production of a Field Sampling Plan (Quality Assurance and Sampling and Analysis Plan), a Health and Safety Plan, Construction Management Plan and Operations and Maintenance Plan;
- Implementation of the Field Sampling Plan;
- Data Analysis;
- Reporting;
- Modification of the Sampling and Analysis plan if necessary; and
- Operation and Maintenance of the SVE system.

1.2. INTERIM REMEDIAL ACTION DECISION MAKING

A decision matrix was established by EG&G MAT to help direct the activities based on certain probable problems. Directions to handle probable contingencies and the best methods to monitor for problems were also outlined in the decision matrix. This matrix was developed to help direct the decision making process after the EE/CA had established the best remedial method. The matrix will help guide decision making in the event of unexpected conditions. The decision matrix can be found in Table 1.1.

1.3. REPORT ORGANIZATION

This document consists of the Work Plan, Sampling and Analysis Plan and a Operation and Maintenance Plan. The Health and Safety Plan has already been submitted to EG&G Mound Applied Technologies for review. The Construction Management Plan will be submitted under separate cover.

There are eleven sections and three appendices to this document. Section 1 provides information on the objectives of the remedial effort. Section 2 provides a brief site background. Section 3 discussed project responsibilities and organization. Section 4 describes the SVE design and installation while Section 5 describes the pilot test. Section 6 presents the implementation and deliverable schedule, and Section 7 provides the references.

Appendix A presents the Quality Assurance Project Plan, Appendix B the Field Sampling Plan, and Appendix C the Operations and Maintenance Plan and Appendix D the Ohio EPA air permitting information.

A Sampling and Analysis Plan consists of a Quality Assurance Project Plan and a Field Sampling Plan. The Sampling and Analysis Plan describes the sampling activities and the quality assurance/quality control (QA/QC) necessary to meet the project objectives. The Quality Assurance Plan and the Field Sampling Plan can be found in Appendix A and B, respectively. The plan for operation and maintenance of the SVE is found in Appendix C. This plan discusses the weekly activities required to keep the system operational during the six month operational period.

Table 1.1. Conceptual Probable Conditions, Deviations, and Contingency Plans for SVE at Building B Solvent Storage Shed Area

	Probable Conditions	Possible Deviation	Possible Contingencies	Monitoring Parameters to Detect Deviation
Duration	less than 1 yr/$1M	more than 1 yr/$1M	-get waiver	midyear review
Depth	5' to bedrock	deeper	-sink wells deeper-increase extraction rate	observe during drilling
		shallower, therefore decreasing radius of influence	-more wells -use sealant on surface	observe during drilling, monitor radius of influence during operation
Areal Extent	discrete but condensed contamination within influence of well network	contamination outside radius of influence	-increased vacuum -more wells -selectively excavate discrete areas of contamination	monitor contribution of Building B VOC's to other areas
Contaminants	VOC spills (no free product)	free product	-excavate	extraction rate of contaminant concentration
	no radionuclides	radionuclides		monitoring during well installation
Permeability	adequate to reduce concentration of VOC's	too low	-more wells -increase extraction rate -excavate	vacuum efficiency as system performs
Vapors	air emission within allowable range	higher than allowable	-enhance off-gas treatment system	monitor emissions

1.4. OTHER INTERIM REMEDIAL ACTION DOCUMENTS

A Construction Management (CMP) Plan has been produced as a guidance document for managing the construction, installation and operation of the SVE system. This document provides ICF KE direction on scheduling, construction project organization, permitting, construction activities, subcontractor responsibilities, construction management activities, cost control, payment, and the construction schedule.

The purpose of the CMP is to provide an organized approach for the construction of the SVE system. The CMP anticipates the specific requirements and actions that will be required during the construction and develops an organized approach to these items. The CMP will be submitted under separate cover.

A Health and Safety Plan describing the procedures to protect worker health and safety has already been approved by EG&G Mound Applied Technologies.

2. SITE CHARACTERIZATION

2.1. SITE DESCRIPTION

Mound Plant occupies 306 acres within the southern city limits of Miamisburg, Ohio (Figure 2.1). The northern boundary of Mound Plant is approximately 0.13 mile south of Mound Avenue in Miamisburg. Mound Avenue curves south, becomes Mound Road, and runs southward along the eastern boundary of the plant. Benner Road forms the southern boundary of Mound Plant, and the Conrail Railroad, formerly the Penn-Central, roughly parallels the western boundary at distances of about 50 to 200 ft (MRC 1985). A railroad siding enters the plant from the west and services the lower plant valley. Details of the plant property boundaries, fencing, and utilities are included in the Site Scoping Report: Volume 4 - Engineering Map Series (DOE 1991c).

There are currently more than 100 buildings on the Site, total floor space exceeds 925,000 ft^2 (MRC 1985). Most of the buildings are located on the northwest high area known as Main Hill. Figure 2.2 identifies the location of the B Building solvent storage shed and other Mound Plant areas and buildings that are located on the Main Hill. Usages of the buildings are described in the Mound Site Development Plan (MRC 1985).

Mound Plant uses a wide variety of chemicals and generates approximately 20,000 gallons of hazardous wastes per year, including organic solvents, waste oils, corrosives, spent plating bath solutions, explosive wastes, and laboratory wastes. Mound Plant has a system of underground piping used, or formerly used, to transmit a variety of wastewaters, including low-level alpha radiation waste, low-level beta radiation waste, sanitary sewage, and storm sewage. The past activities at Mound Plant are described in the OU-9 Work Plan (DOE 1991b).

2.2. B BUILDING SOLVENT STORAGE SHED AND TEMPORARY DRUM STORAGE AREA

The B Building solvent storage shed and temporary drum staging area are shown on Figure 2.2. The description of past operations in the B Building, the B Building Solvent Storage Shed, and the B Building temporary drum staging area are discussed in the Field Sampling Plan (Appendix B).

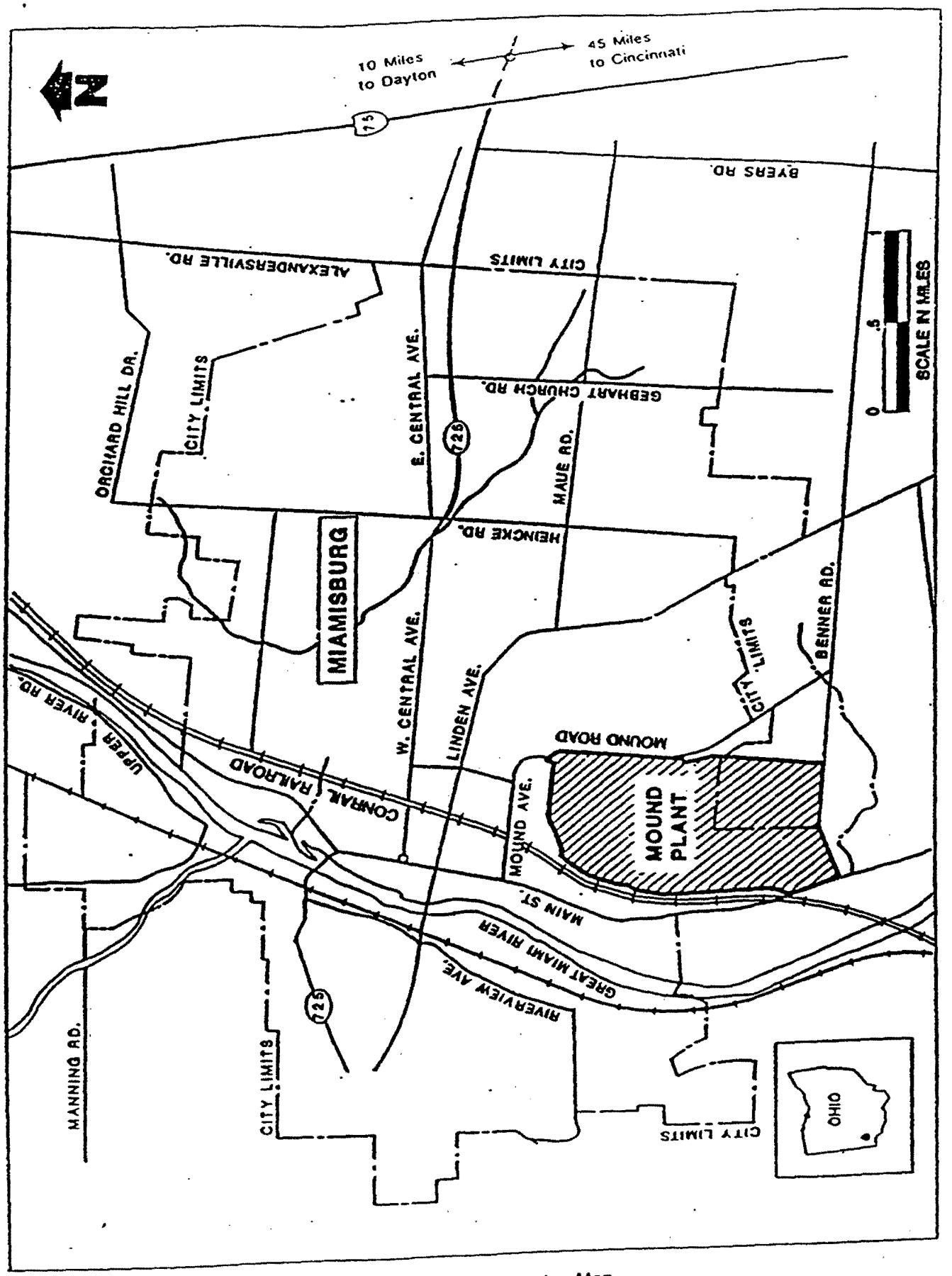

Figure 2.1. Site Location Map

3. PROJECT ORGANIZATION AND RESPONSIBILITIES

Project organization and responsibility are divided among the DOE ER Program Group, which includes the following: the DOE Albuquerque Field Office (DOE AL); the DOE Dayton Area Office (DAO) and its operating contractor, EG&G Mound Applied Technologies, Inc. (EG&G MAT); and the ER Program EG&G MAT subcontractors. The EG&G MAT subcontractor for the B Building Solvent Storage Shed Area is ICF Kaiser Engineers, Inc. (ICF KE). ICF KE has subcontracted the installation and operation of the SVE system to ETG Environmental, Inc. The following provides a brief summary of the organization and responsibilities for removal action. A more complete discussion of the project organization and responsibilities can be found in the Quality Assurance Project Plan found in Appendix A of this Work Plan.

3.1. FIELD TEAM RESPONSIBILITIES

The ICF KE field team responsibilities for the field investigation will consist of performing the field activities specified in the Field Sample Plan (Appendix B). The ICF KE field oversight engineer will consist of one individual, Chris Amidon, who will have the following responsibilities:

- Field oversight, and
- Site health and safety coordinator (SHSC).

The ICF KE field oversight engineer is responsible for directing the field activities and communicating progress and any issues to the ICF KE project manager. He is also responsible for ensuring that the health and safety guidelines specified in the Health and Safety Plan are followed. He will be trained in first aid and CPR. It is their to make sure safe work practices are implemented and to report all incidents that occur during the field activities. The ETG field team leader, Jason Guenther, will be designated the sample document control administrator. He will be responsible for tracking the locations sampled and for will ensure that samples are properly labeled and documented prior to shipment to the laboratory. The administrator will ensure that the sample control procedures specified in the site-wide QAPP are followed.

3.2. MANAGEMENT RESPONSIBILITIES

The EG&G MAT Project Manager is Gary Coons who has overall responsibility for the project. The EG&G MAT Project Manager is responsible for the operations of the subcontractors, coordination with EG&G MAT support groups, baseline scheduling and cost control. The EG&G MAT Project Manager is responsible for ensuring that EG&G MAT and DOE procedures and policy are implemented. Keith Egan is the ICF KE Project Manager who is responsible for the implementation of the project, reporting, ICF KE

and subcontractor cost control, and project scheduling. The ICF KE project coordinator, Brad Spackman, has responsibility for the construction, operation, and maintenance of the SVE system. He is also the lead author for project reports. Jay Erickson is the ETG Project Manager and will be responsible for the installation, testing, and operation of the SVE system. He will also be responsible for the implementation of the Quality Assurance Project Plan (Appendix A of this Work Plan) and the Field Sampling Plan (Appendix B of this Work Plan).

4. SOIL VAPOR EXTRACTION SYSTEM INSTALLATION

4.1. PRECONSTRUCTION ACTIVITIES

This section describes the initial tasks needed to facilitate the remediation of the soils near the B Building Solvent Storage Shed Area. This section provides a discussion on the pre-construction tasks. The preconstruction tasks are: preconstruction conference, EG&G MAT training, identification of utility locations, preliminary investigation, and mobilization.

4.1.1. Preconstruction Conference

Prior to construction beginning, a kickoff meeting will be held at Mound. The meeting will be lead and run by the ICF KE Project Manager who will also prepare the agenda. The objective of this meeting is to coordinate the activities associated with the construction of the SVE system. Personnel from EG&G MAT, ICF KE, and ETG Environmental will attend the meeting. The objectives of this meeting are to coordinate all related field activities, to identify the appropriate personnel along with their associated roles, coordinate EG&G MAT support, and to identify specific requirements that EG&G MAT has for the construction of the SVE system.

4.1.2. Mound Training

The first step of the project is to ensure that personnel who will be working on the project receive the proper EG&G MAT training. EG&G MAT requires that personnel working on the site receive an orientation briefing. Prior to work commencing, personnel will receive the necessary training. The ICF KE project coordinator will arrange these activities through the EG&G MAT's project engineer.

4.1.3. Identify Utility Locations

In order to facilitate the construction schedule, utility locations will be identified prior to construction commencing. The accuracy of the underground utility locations drawing, as presented in Figure 4.1, has not been determined and will require field locating the utilities. The ICF KE project coordinator will arrange to have the utility locations identified through EG&G MAT's construction inspection. To prevent damage to the numerous utilities in the area, wells will be first drilled with a 1 inch hand auger. If no utilities are contacted, then standard motor driven augers can be used to drill the well. A utility map is provided in Figure 4.1.

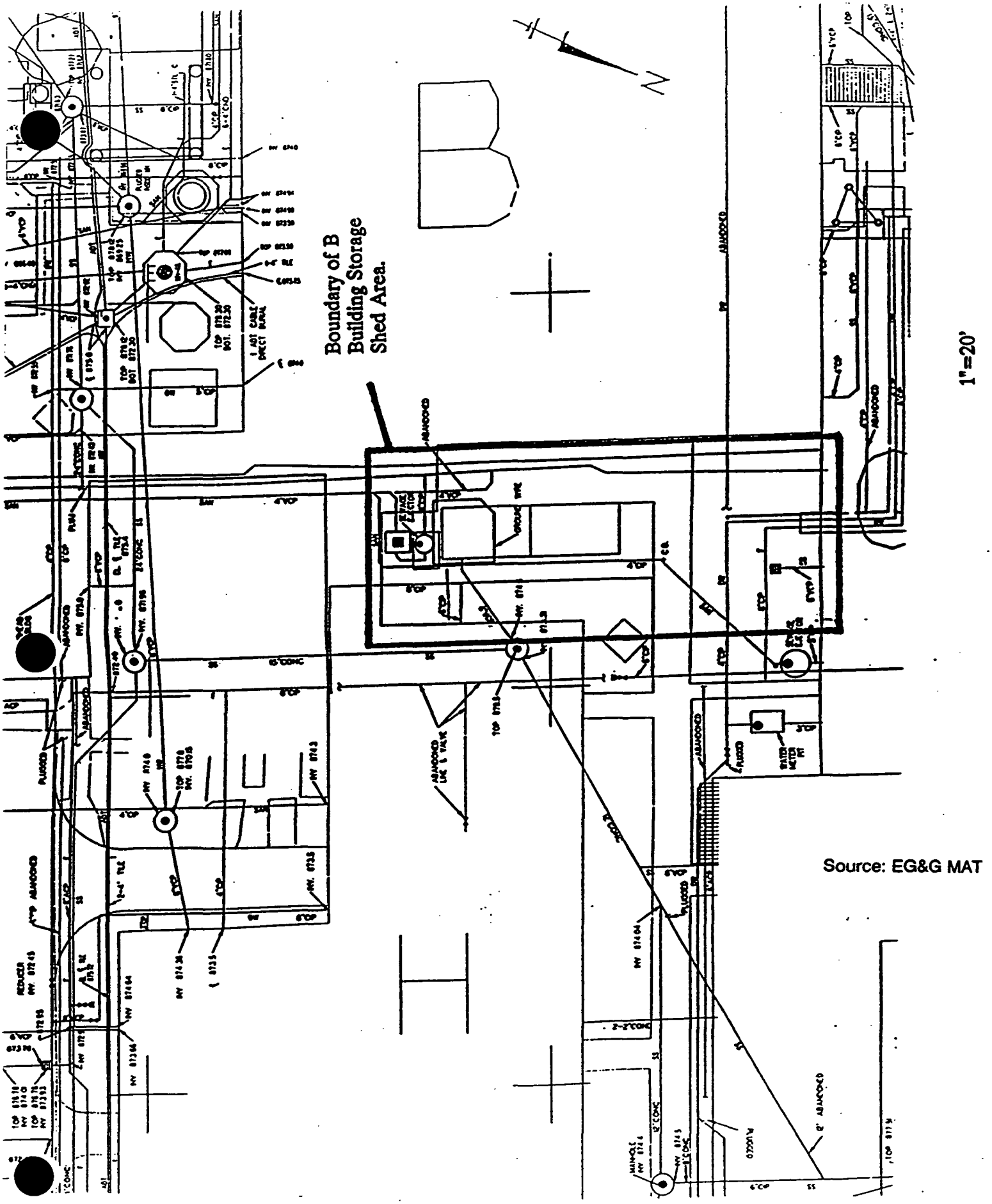

Figure 4.1. Underground Utilities in the Vicinity of the B Building Solvent Storage Shed

4.1.4. Preliminary Investigation

A site walk through will be performed by the project team in order to assess the current conditions of the B Building Solvent Storage Shed Area prior to construction activities. This site walk through will be performed in conjunction with the kickoff meeting.

4.1.5. Mobilization

ICF KE and ETG will mobilize their equipment to the site as required. This includes at a minimum purchasing, planning, subcontracting an analytical laboratory, and transporting equipment.

Prior to shipping, necessary material must be suitably boxed or mounted on skids for shipment. Loose parts must be tagged, crated, and shipped with the unit. The SVE system must be shipped, adequately braced as an assembled unit, consistent with good shipping practice. The SVE system must be shipped directly to the B Building area by ETG. ETG is responsible for damage incurred to the SVE system prior to delivery at the project site.

Activities such as scheduling site access, the site orientation, bioassays, security, respirator physicals, fit testing, and training will be arranged by the project coordinator through EG&G MAT's project engineer. Arranging support with EG&G MAT's departments will be coordinated by the construction inspector.

4.2. SYSTEM OVERVIEW

To remediate the soils within the B Building Solvent Storage Shed Area, the SVE system must be able to flow air through the target soil volume and must not transport contamination into the B Building Storage Shed area from outside the target soil volume. Contaminants must not be transported from outside the treatment volume for two reasons:

- Contaminants may be transported to areas beneath buildings or structures and that would be difficult to later remediate, and
- The targeted soil volume may never be remediated because of a constant outside source of contaminants.

Three types of SVE systems were considered: withdraw only, withdrawal with passive injection, and withdrawal with active injection. The SVE system chosen for the B Building Solvent Storage Shed Area is active injection with withdrawal. This system was chosen because of the low permeability of the soils,

the presence of buildings with footings on three sides of the treatment zone and potentially contaminated soils outside the target treatment volume.

The well locations for the initial active injection with withdrawal SVE system is shown on Figure 4.2. Up to 17 SVE wells, depending on utility line interference, are proposed and laid out on a staggered grid with approximate 20 foot spacings. The five wells oriented along the center row will be used as the withdrawal wells. The remaining twelve wells located along the two outside rows will be used as active air injection wells. The expected air flow pathways and the node of no-flow (treatment node) between the wells are shown on Figure 4.2 for the initial operating configuration. If after treatment, off-gas concentrations indicate that the treatment is not complete using the initial well configuration, the well field will be rotated as shown on Figure 4.3, so that the former node areas receive treatment.

4.3. METHODS

To adequately install the SVE system, procedures for establishing the well configuration, the use of appropriate equipment, the measurement of collected samples, and the electrical requirements will be established in the following sections.

4.3.1. Installation of Vadose Zone Air Wells

Once a well location has been marked in the field, an EG&G MAT construction inspector will determine if a well can be installed at that location using one of several underground utility search methods. Once a location has been cleared ny the construction inspector, ETG will hand auger the boring with a 1 inch auger. If no utilities are contacted, the well be installed using the method described in the following paragraphs. If utilities are contacted, the location will be moved, and the process repeated.

Vadose zone air wells will be constructed at up to seventeen locations throughout the treatment areas to treat the soil volume located between injection and withdrawal points.

All borings will be installed using 4.25 inch ID hollow stem augers, producing an 8 inch diameter boring. The wells will be installed according to the RI/FS SOPs 4.3 and 4.4 found in Appendix B. A Bobcat fitted with a drilling head will be used for the well installation, instead of a drilling rig. The Bobcat rig is capable of drilling to depth of 40 feet in sand and 30 feet in clay. The advantage of using the Bobcat rig is its maneuverability and small size.

The ETG patented (U.S. Patent No. 5,050,677) wells will be built in the 8-inch diameter boreholes, drilled to the top of bedrock, approximately 10 feet below grade (Figure 4.4). The boreholes will be backfilled with pea gravel to a depth of four feet below grade. At this depth, a 2-inch diameter PVC air conduit will be placed. The lower end of the PVC conduit will be covered with 1/4 inch hardware cloth to prevent withdrawal of solids during vacuum operation. The remainder of the borehole will then be backfilled with pea gravel to a depth of two feet below grade. The remainder of the borehole will be filled with one foot of bentonite overlain by one foot of concrete. A general schematic of the well construction detailed is shown in Figure 4.4.

Soil brought above grade during installation will be placed in drums for later sampling and disposal by EG&G Mound.

During installation, worker breathing zone air will be sampled to determine the level of personal protection. The air will be monitored using a photoionization detector (PID), a aerosol monitor and an explosivity detector.

The augers will be steam cleaned prior to drilling each boring. The Bobcat must be free of leaks which could contaminate the holes (i.e., hydraulic fluid, oil, gas, etc.). No grease will be used on drill pipe joints; however, Teflon tape or vegetable oil is acceptable. Air quality will be monitored in and near the hole during drilling using a Photo-ionization Detector (PID) or Flame Ionization Detector (FID). Decontamination protocol for field activities, will follow the RI/FS SOPs 1.1, 1.3, 1.4, 1.5, 1.6, 1.15, 4.1, 5.3, and 5.4, found in the Field Sampling Plan (Appendix B of this Work Plan). These procedures will ensure that there is no cross-contamination. In general, critical cleaning procedures should include sampling devices between sampling locations. This critical cleaning will include a series of procedures to remove contaminant classes potentially encountered at the site. Generation of decontamination liquids (i.e., water and organic rinses) should be kept to a minimum since these liquids will be containerized and disposed of in an environmentally sound manner. Development water will be containerized and transported to the EG&G MAT decontamination pad for storage in the holding tanks. EG&G MAT will provide the storage drums. ETG will create a project specific decontamination pad.

4.3.1.2. Drill Cuttings

Drilling cuttings will be examined closely for evidence of contamination. The cuttings will be inspected visually by an experienced geologist or professional and the presence of volatile organics will be checked using a PID/FID. Borehole cuttings brought above grade during the SVE installation will be then stored at the drum staging area in labeled and sealed in open head type 55 gallon steel drums according to RI/FS SOP 1.15. attached in Appendix B. EG&G MAT will provide the drums for the soil cuttings.

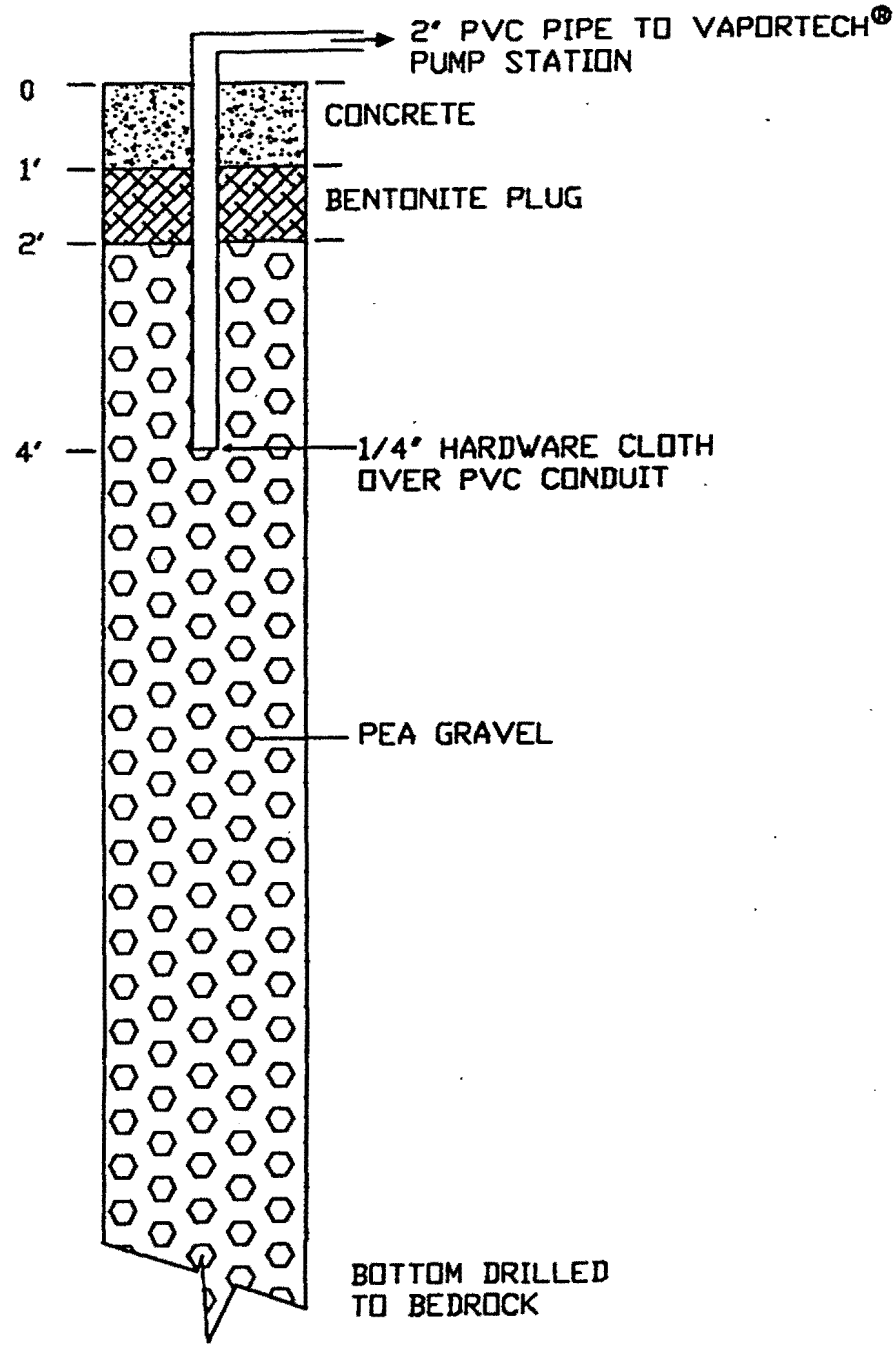

SOURCE: ETG ENVIRONMENTAL, INC. PATENT NO. 5,050,677

NOT TO SCALE

Figure 4.4. Well Construction Diagram

4.3.1.3. Borehole Logging

Downhole soil samples for accurate subsurface material logging purposes will be obtained at the discretion of the ICF KE field oversight engineer and the ETG geologist/engineer. Drill cuttings will not be substituted for downhole samples. One soil sample will be obtained from the screened interval for geotechnical analyses and for the purpose of screen slot size determination. Procedures for borehole logging will follow the RI/FS SOP 5.1, attached in Appendix C. Actions shall be taken to ensure that no surface runoff enters an open borehole. Boring logs will be submitted in the final report.

4.3.1.4. Well Construction Logs

Suitable logs detailing subsurface conditions and construction practices will be maintained for inclusion in the final report. The logs will be prepared by the ETG geologist/engineer present during the drilling operations. One copy of each field well construction log will be submitted to ICF KE not later than ten (10) calendar days after the well is completed. Information provided in the logs must meet the requirements of the RI/FS SOP 5.1. Well installation diagrams will be submitted in the final report.

4.3.1.5. Water Level Measurements

ETG will obtain water level measurements during the well installation if applicable. ETG will follow the procedures in the RI/FS SOP 3.1, attached in Appendix C, for obtaining the water level measurements. Groundwater levels will be corrected for floating product thicknesses encountered. Floating product thicknesses will also be recorded. It is not anticipated that water will be present at the depth that the SVE wells will be installed because wells should not encounter any type of groundwater.

4.3.1.6. Soil Sampling

During installation of the boreholes for the SVE wells, soil samples will be collected using a split spoon soil sampler. Soil samples will be collected at 0-2 ft below grade (bg), 4-6 ft bg, and 8-10 ft bg.

Samples will be split upon collection. Part of the sample will be placed in glass soil sample jars for possible laboratory analysis. The remaining sample will be used for field headspace analysis. This sample will be placed in a jar, filling the jar halfway. The jar will be covered with aluminum foil and sealed. The jar will be heated to volatilize any volatile compounds. The jar lid will then be removed and the foil will be punctured with a Microtip PID probe to analyze the headspace above the soil.

One sample from each boring will be sent to the laboratory for analysis using EPA Method 8240. The sample will be selected from each boring based on the highest headspace concentration.

Soil samples will also be collected from each boring and submitted for grain size analysis. Grain size analysis will be performed by using ASTM Method D4222.

During the soil sampling, the soil samples that are collected will be split. One split will be counted for radioactivity by EG&G MAT's Health Physics department for radioactivity. The other split will be placed in the appropriate containers as described in the FSP and shipped to the laboratory. Prior to shipping offsite, the subcontractor must receive a release from EG&G MAT that the samples are allowed to be shipped offsite.

4.4 SYSTEM DESIGN

4.4.1. Air Condult Network Assembly

Each well will be piped individually to the pump station using 2-inch diameter PVC pipe, flexible 2-inch diameter hose, and CamLock fittings. Piping the wells individually allows air flow measurements and sample collection from each well. The rate of air flow in each well can also be controlled by adjustment of ball valves on each well.

4.4.2. Treatment Area Cover

An air and water resistant cover is used to prevent air movement to and from the free atmosphere and to prevent infiltration of precipitation into the treatment volume. The site cover also helps to control airflow paths which assures thorough air-soil contact and speeds treatment. A layer of reinforced placed will be installed over the treatment area covered by crushed stone.

4.4.3. Soil Probes

Soil probes will be installed at up to six locations around the site, to provide additional pressure distribution and VOC concentration data. At each location, two probes will be installed; one at 3 ft. bg and one at 8 ft. bg. The soil probe points will be driven to the desired depth and left in place. The probe tips will be connected to the surface using 1/4 inch O.D. tubing.

4.4.4. SVE Pump Station

Basic pump station specifications (300 Series) are as follows:

- Explosion-proof pumps, motors, starters and wiring throughout with interior and exterior system shut-offs.
- Matched, positive-displacement blowers,150 scfm, each driven by 10-HP motors.
- Large and small-particle filters upstream of pumps.
- Intake and discharge silencers on the positive displacement blowers.
- Sample withdrawal pump and manifold for recovering gas-phase samples from each of the withdrawal taps.
- Condensate and large particle knock-down receiver with automatic vacuum relief and pump-out and overflow protection that shuts down the entire system in the event of condensate pump-out failure.
- Mechanical sensor linkage to critical pump operating conditions for automatic shutdown. Electronic pump station sensor system.
- Entire pumping system pre-assembled, pre-tested and contained. Installation requires connection of withdrawal and injection taps to quick-connect manifold fittings and electrical connection to overhead weather head.
- Stations require 480-volt, three-phase, 100-amp service.

The SVE system will be run in two modes: closed and open loop. Closed loop involves reinjection of the treated gas while open loop involves off-gassing the treated gas. Process and instrument diagrams (PID) for the modes are shown in Figures 4.4 and 4.5.

Other specifications of the system are as follows:

- Air Emission Control Equipment - The extracted air will be treated using activated carbon. The SVE system can be operated in a closed loop configuration where the extracted air is routed through carbon and re-injected into the treatment volume. Operating the system in a closed loop configuration will eliminate the need to secure an air discharge permit. A permit could be applied for at the start of the project, and once secured, the system can be switched to operate in an open loop, where the extracted air is discharged to the atmosphere, following carbon treatment. Process air will be routed through two 55-gallon vapor-phase carbon vessels prior to discharge or re-injection. An air sample port will be installed on the effluent side of the carbon treatment unit.
- Exhaust Stack - will be provided to vent air from the air emission control unit at an elevation of no less than 15 feet from the ground. The stack may be segmented for transport. The stack must be self-supporting (i.e., will not be anchored directly to and relay on support from the top of the air emission control unit), and must be anchored to the trailer.

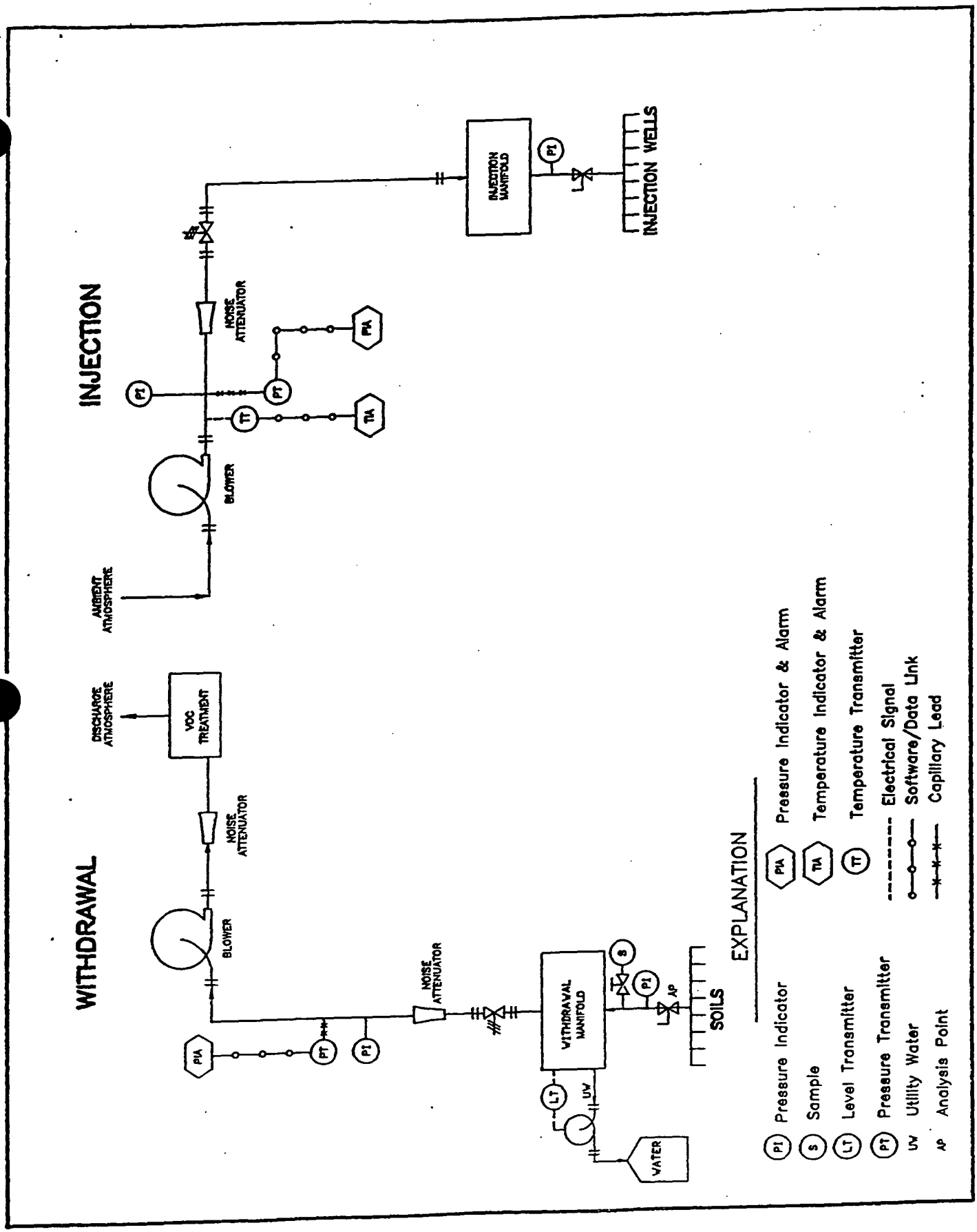

Figure 4.5. SVE Pump System Process and Instrument Diagram - Open Loop Configuration

Source: ETG Environmental, Inc.

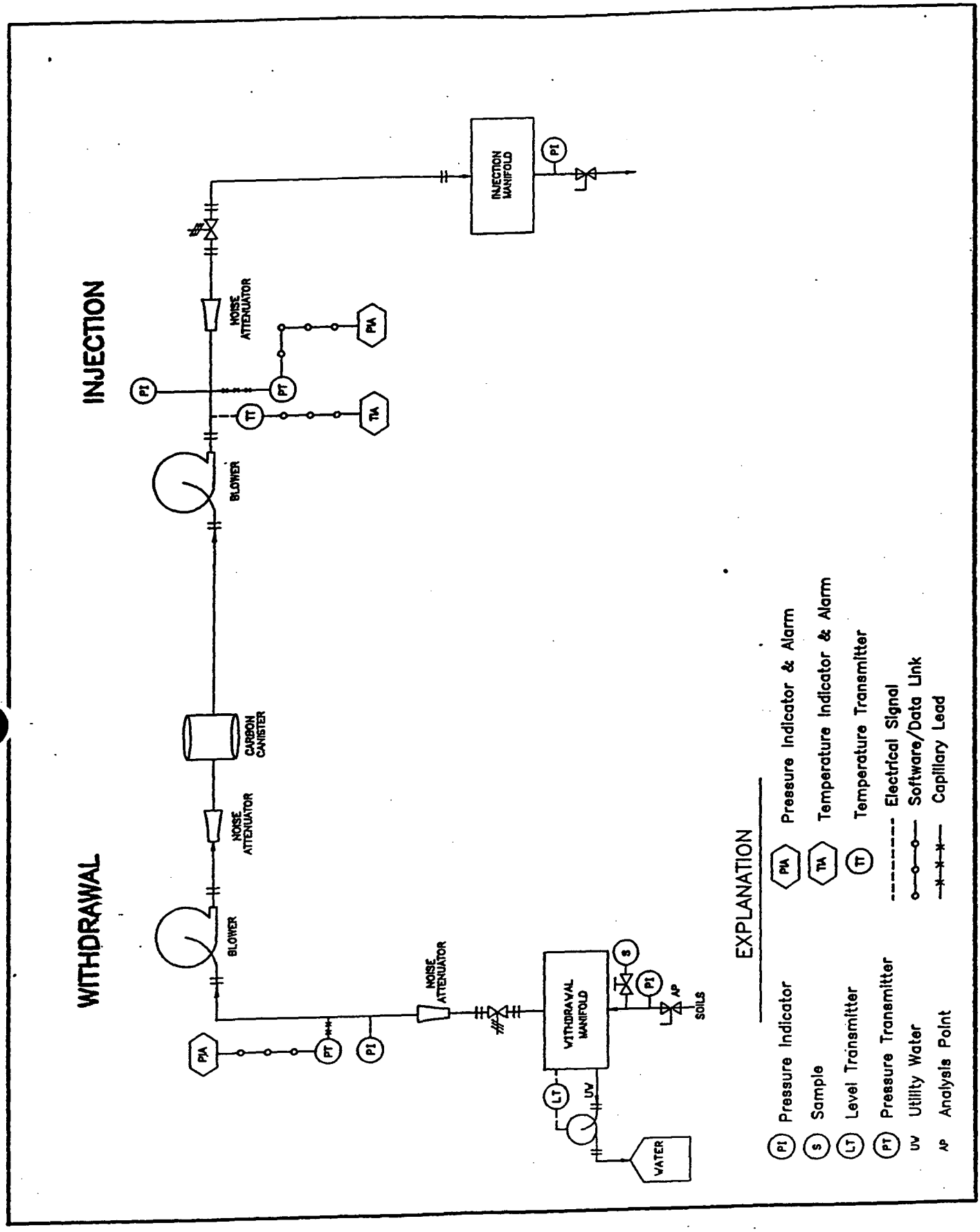

Figure 4.6. SVE Pump System Process and Instrument Diagram - Closed Loop Configuration

Source: ETG Environmental, Inc.

- Building of Trailer - The trailer will be of sufficient size to accommodate the SVE mechanical equipment and other necessary equipment. The entire system is housed in a sheet metal shed mounted on skids.

- Securing Equipment - Mechanical equipment will be securely fastened to the trailer.

- Unit Jacks and Anchors - Corner and/or tongue jacks or supports will be included to allow for the quick set-up, leveling, and operation of the SVE at the work site. The SVE will not be operated while hooked to the tow vehicle. Also, provisions for anchoring the SVE will be provided in case such anchoring during operation will be necessary.

- Equipment Guards - Mechanical equipment will be equipped with necessary guards per OSHA regulations to prevent injury to workers. Additionally, the SVE may operate unattended; and, thus, the guards must be adequate to protect the general public.

- Noise - The SVE system is equipped with a muffler to reduce machinery noise. Noise during SVE operations will be less than 85 db at 3 feet.

- Extraction Well Capture Zones - The well spacing is approximately 20 feet, between injection and withdrawal well. This spacing will maximize the volume of soil influenced by air flow, while minimizing the cost of installation.

- System Piping - Each well will be piped individually to the pump station using 2-inch diameter PVC pipe, flexible 2-inch diameter hose, and CamLock fittings. Piping the wells individually allows air flow measurements and sample collection from each well. The rate of air flow in each well can be controlled by adjustment of ball valves on each well.

- Soil Pressure Probe Installation - Soil probes will be installed at 6 locations around the site, to provide additional pressure distribution and VOC concentration data. At each location 2 probes will be installed; one at 3 ft below ground surface and one at 8 ft below the ground. The soil probe points will be driven to the desired depth and left in place. The probe tips will be connected to the surface using 1/4 inch O.D. tubing.

Painting will not be required for parts of equipment that are manufactured of, or coated with, corrosion-resistant materials, that are machine finished and normally left unpainted, or that are subject to abrasion. Other parts of equipment and ferrous surfaces must be painted in accordance with manufacturer's standard paint system.

Machine-finished parts that are not manufactured of corrosion-resistant materials or are not painted must be coated with a heavy coat of rust-inhibiting compound that can be easily removed at installation by use of cleaning solutions and wiping.

Equipment provided may be shop inspected by the ICF KE field oversight engineer or a representative of EG&G MAT to verify the dimensions and workmanship, and to assure that fabrication and assembly is sound and based on acceptable practices. ETG will make personnel available to assist in dimensional checks. Dimensional checks will be made to verify equipment compliance with the WP certified drawings.

Equipment inspection will include, at a minimum; construction, quality of materials, and assurance that the overall appearance is acceptable for the design. Failure to inspect the equipment prior to shipment will not relieve ETG from the SOW's specification or the Contract Terms and Conditions.

Dimensions and details found not to be in compliance with ETG's certified drawings and the SOW's specifications will be cause for rejection of the work and the necessity for subcontractor to rework the equipment in accordance with the Procurement Contract Terms and Conditions.

The system will comply with the latest addition of the applicable codes and recommended standards of the organizations listed below:

- National Electrical Manufacturers Association (NEMA);
- National Electrical Code (NEC);
- American Society of Testing and Materials (ASTM); and
- Instrument Society of America (ISA).

4.4.5. Electrical Installation

The following requirements for trailer electrical hookups to the EG&G MAT power system were adapted from the 1993 National Electrical Code. ETG will be responsible for meeting these requirements:

For service equipment, the following requirements must be met:

- The service disconnect with over current protection shall be located within 30' of the SVE trailer. [550-23a]

- The disconnect shall be 2' above grade and less than 6'-6" to the handle in its highest position. [550-23e]

- For a trailer with the service exceeding 50 amps the service disconnect equipment shall be rated for 100 amps. [550-23b]

- For a service exceeding 50 amps the feeder shall be run in rigid conduit (6" deep), PVC (18" deep), direct burial code (24" deep) or overhead to a weatherhead (elevated per 230-24b). [550-5i]

- For a service less than 50 amps the SVE trailer may be connected by cord and plug.

- For a cord and plug connected service a 60 amp rated fused disconnect switch shall be used to feed the receptacle.

- A cord and plug connected service shall be a listed 4 wire type marked "For use with mobile homes-50 amperes", and with a 50 amp, 125/250 volt, 3-pole, 4-wire grounding type plug. The cord shall be at least 20' long but not over 36'-6" long. [550-5a,c,d,e]

- A #8 grounding electrode conductor shall be run from a grounding electrode to the service ground in the service entrance equipment. [550-11 & 250-23a]

Within a trailer the following requirements shall be met:

- Electrical and non-electrical metal parts shall be grounded through the feeder panel grounding bus which shall be grounded through the feeder to the service equipment ground. [550-11]

- The neutral shall be insulated from the grounding conductors and from equipment enclosures. Bonding devices shall be removed. [550-11a1] No neutral shall be connected to the frame of the trailer or frame of equipment.

- A single main disconnect shall be provided within each trailer and clearly marked as "Main". [550-6a]

- The total service requirements of a trailer shall be calculated as follows:
  - 3 VA per square foot for lighting and general receptacles [550-7a]
  - the greater of either heating or air conditioning VA
  - 1500 VA for each small appliance circuit (refrigerators, water coolers, microwaves, etc.), may apply demand factors for multiple circuits

- For branch circuits:
  - Receptacles shall be of the grounding type [550-8a]
  - Fixed appliance continuous loads shall not exceed 80% of the branch circuit rating (air conditioners). [550-7c2]

- Ground wires must be green insulated, base ground wires are not permitted. [550-24a]

The system will be capable of operating in the climate associated with central Ohio. Climatic factors which should be considered include temperature and humidity. Other environmental factors to consider are elevation and seismic activity. Utilities will be supplied to the SVE location designated by ETG.

4.4.6. Off-Gas VOC Control

The extracted air will be treated using activated carbon. The proposed SVE system can be operated in a closed loop configuration where the extracted air is routed through carbon and reinjected into the treatment volume. Operating the system in a closed loop configuration will eliminate the need to secure an air discharge permit. A permit will be applied for during the project, and once secured, the system can be switched to operate in an open loop, where the extracted air is discharged to the atmosphere, following carbon treatment.

Process air will be routed through two 55-gallon vapor-phase carbon vessels prior to discharge or re-injection. An air sample port will be installed on the effluent side of the carbon treatment unit to monitor the effectiveness of the treatment system.

4.4.7. Sample Collection and Measurements

During the pilot study and 6 month operation of the system, soil vapor samples will be collected to determine the contaminant concentrations and the effect of the SVE on the site soils. Soil vapor samples will be collected from the withdrawal wells and from the soil probes. The following provides a summary of the different types of samples that will be collected from the SVE system:

- Pneumatic Conductivity Tests - Pneumatic conductivity tests will be performed the first two days of the pilot study to provide vadose zone parameters.
- SVE Well Samples - Soil vapor samples will be collected from the 5 withdrawal wells to help monitor the effectiveness of the removal action.
- Composite Sample - One composite soil vapor sample from the SVE system wells will be collected per sampling event to help monitor the effectiveness of the removal action.
- After Carbon Unit Sample - Soil vapor samples will be collected to determine if the carbon units have reached their loading capacity.
- Soil Probe Samples - Soil vapor samples will be collected from the 6 soil probes to help monitor the effectiveness of the removal action.

The total number of samples and the frequency of each sampling event can be found in the Field Sampling Plan found in Appendix B of this Work Plan.

4.5. PERMITTING

If required, a permit to install (PTI) and a permit to operate (PTO) will be secured from the Ohio Environmental Protection Agency (OEPA) by ETG. To date, no information has been submitted to OEPA. Information to be submitted to the OEPA includes:

- Site location,
- Site description and background,
- Nature and type of contamination,
- Description of the SVE system,
- Description of off-gas control equipment, and
- Schedule of system operation.

The SVE system will be first operated in a closed loop configuration, eliminating any discharge of air to the atmosphere. The contaminated air removed through the withdrawal wells is routed through activated vapor phase carbon and re-injected through the SVE injection wells. Operating the system in a closed loop configuration eliminates the requirement for a permit to discharge effluent air to the atmosphere. Once it is desired to operate in the open loop configuration, a PTI and PTO, or the information provided in the permits, will be submitted to the OEPA. EG&G MAT and DOE DAO have not yet decided on submitting the permits or just the required information. An example PTI and PTO can be found in Appendix D.

4.6. SCHEDULE, PERSONNEL AND EQUIPMENT REQUIREMENTS

Installation of the SVE system will be completed in approximately five (5) working days. During installation, the ETG field crew will consist of a site supervisor, a project geologist, a field technician and an equipment operator. Oversight will be conducted by ICF KE which will also provide health and safety monitoring. Equipment to be used during installation of the SVE system are a Bobcat skid steer loader, a dump truck, a Case 580 backhoe and field pickups.

5. THIRTY DAY PILOT STUDY

5.1. PILOT STUDY OPERATION

A pilot study will be operated for a period of thirty days, following SVE system installation. The purpose of the pilot study is to optimize system operation, prior to the six month operation.

Pneumatic conductivity tests will be conducted during the first two days of the pilot study. These tests will be operated on single wells. Soil probes will be installed at various radii from the withdrawal wells. Four air samples will be collected on the first day, one at the beginning of each withdrawal test and one at the termination of each withdrawal test.The pneumatic conductivity test will be operated on single wells. The conductivity test will be operated on a well using varied injection and withdrawal air flow rates. Each part of the test will be operated for 4 hours or until the soil atmosphere stabilizes. The performance test will be as follows:

1) Operate the SVE well as a withdrawal well using two different vacuums and air flow rates.

2) Operate the SVE well as a pressure injection well using two different pressures and air flow rates.

Following the pneumatic conductivity test, the system will be operated for 28 days, during which all withdrawal and injection wells will be operational.

Table 5.1 details the frequency and source of soil vapor sample collection. Day 1 is the first day of the 28 day full scale operational period of the pilot study. The schedule listed below assumes that the pilot study starts on a Monday, and that Monday and Tuesday are spent conducting the pneumatic conductivity test. Full scale operation of the pilot study will begin on Wednesday. The schedule also assumes site visits on Monday through Thursday.

Data collected during the thirty day SVE pilot study includes the following:

- Soil atmosphere pressures and vacuums in wells and vapor probes,
- Process air flow rates, and
- Contaminant concentrations in the process air

During the 28 day operating period of the pilot study, baseline soil offgas and soil probe concentrations of volatile organic compounds will be measured in vapor samples. Soil air pressure distributions will be measured in the 12 soil probes (2 probes at 6 locations) installed within the treatment area.

Table 5.1. Soil Vapor Sampling Schedule

Day of Pilot	SVE Well Samples	Composite Sample	After Carbon Sample	Soil Probe Samples	Total Samples
Day 1-15 min	5	1	1	12	19
Day 1-4 hour	5	1	0	0	6
Day 1-8 hour	5	1	0	0	6
Day 2	5	1	0	0	6
Day 8	5	1	0	6	12
Day 15	5	1	0	0	6
Day 22	5	1	0	0	6
Day 30	5	1	1	6	13
				Total Air Samples for Pilot	86

5.2. PILOT STUDY DATA ANALYSIS

5.2.1. Pneumatic Conductivity Calculations

Pneumatic conductivity will be calculated using pressure probe readings and air flow rate during the operation of the pilot system. ETG has developed a calculation system which describes the relationship between the rate of pressure drop through soils ($"H_2O \bullet ft^{-1}$) as a function of air flow per cross-sectional area (ft3•min-1•ft^{-2}) as follows:

$$Q(ft^3 \bullet min^{-1} \bullet ft^{-2}) = K\ (ft^2 \bullet min^{-1} \bullet "H_2O^{-1}) \bullet \Delta P\ ("H_2O \bullet ft^{-1})$$

The relationship is linear through the range of pressure drops normally induced under field conditions. The total pressure drop can be determined across a treatment volume for any selected air flow. The cross-sectional air flow for a radial flow system is not constant, but is a function of the radial distance from a well. The total pressure drop across a radial well system can be calculated as follows:

$$\Delta P_{a \to b} = Q'/(2 \bullet \pi \bullet K \bullet D) \bullet \int 1/r\ dr$$

where:

$\Delta P_{a \to b}$ is the total pressure drop between two radii, a and b ("H_2O)

Q' is the air flow rate ($ft^3 \bullet min^{-1}$)

D is the vertical depth of treatment (ft)

K is the soil air conductivity ($ft^2 \bullet min^{-1} \bullet "H_2O^{-1}$)

π is a constant, 3.1415

r is the radius between the well and the probe.

Integrating over the interval from radius a to radius b,

$$\Delta P_{a \to b} = Q'/(2 \bullet \pi \bullet K \bullet D) \bullet \ln(b/a)$$

where:

a is the radius of the well borehole

b is the radius to the measuring probe

Rearranging the equation as :

$$K = Q'/(2 \bullet \pi \bullet \Delta P_{a \to b} \bullet D) \bullet \ln(b/a)$$

allows the soil air conductivity of the soil to be calculated.

The primary data used to evaluate the effectiveness of the SVE system during the 6 month operational period are the offgas concentrations. During the site visits, air flow measurements will be made on each of the extraction wells, as well as on the total system effluent. Pounds of contaminants removed will be calculated using the average contaminant concentration between two sampling events, the volumetric air flow, the molecular weight of the contaminant and the Ideal Gas Law. A sample calculation is shown below:

5.2.2. Ideal Gas Law

$$PV = nRT$$

where:

P = Absolute pressure of gas in atmospheres

V = Volume of gas in liters

n = number of moles of gas

R = universal gas constant (0.08205 liters•atm/mol•K)

T = Temperature in degrees Kelvin (293 K = 20° C)

5.2.3. Known Parameters

1 ppm gas = 1 μL/Lair = 10^{-6} Lgas/Lair

Volumetric Air Flow = CFM(28.316L_{air}/cubic ft) ($PPM_{ave}10^{-6}$ L_{gas}/L_{air}) =

CFM•PPM_{ave}•28.316X10^{-6} liters/minute = V(t)

where: CFM = SVE extraction rate

PPMave = average contaminant concentration for time interval between sampling events

Pressure = 1 atm

T = 293 K

The parameters listed above are then put into the Ideal Gas Law and the equation is solved for n = moles of contaminant per minute. Using the molecular weight of the contaminant, the time interval between sampling events and conversion factors, the pounds yielded by the SVE system can be calculated.

5.3. REPORTING

Operational and test data will be analyzed and the results of the analysis presented in a series or reports. The reports include one pilot test and four performance evaluation reports. The reports will contain well logs, information on soil air permeability, flowrate versus applied vacuum, estimated mass of volatile organics in the soil and chemical withdrawal rates. In addition, each report will discuss the operational modifications that may be implemented to enhance the performance of the system as well as the estimated costs of the implementation of the modifications.

6. SCHEDULE

Construction and operation of the SVE will be based on the schedule shown in Table 6.1. The currently planned start date for construction is May 9, 1994. The pilot test and operational performance reporting schedule is shown in Table 6.1. If construction and testing proceed as planned, the first report will be delivered July 5, 1994.

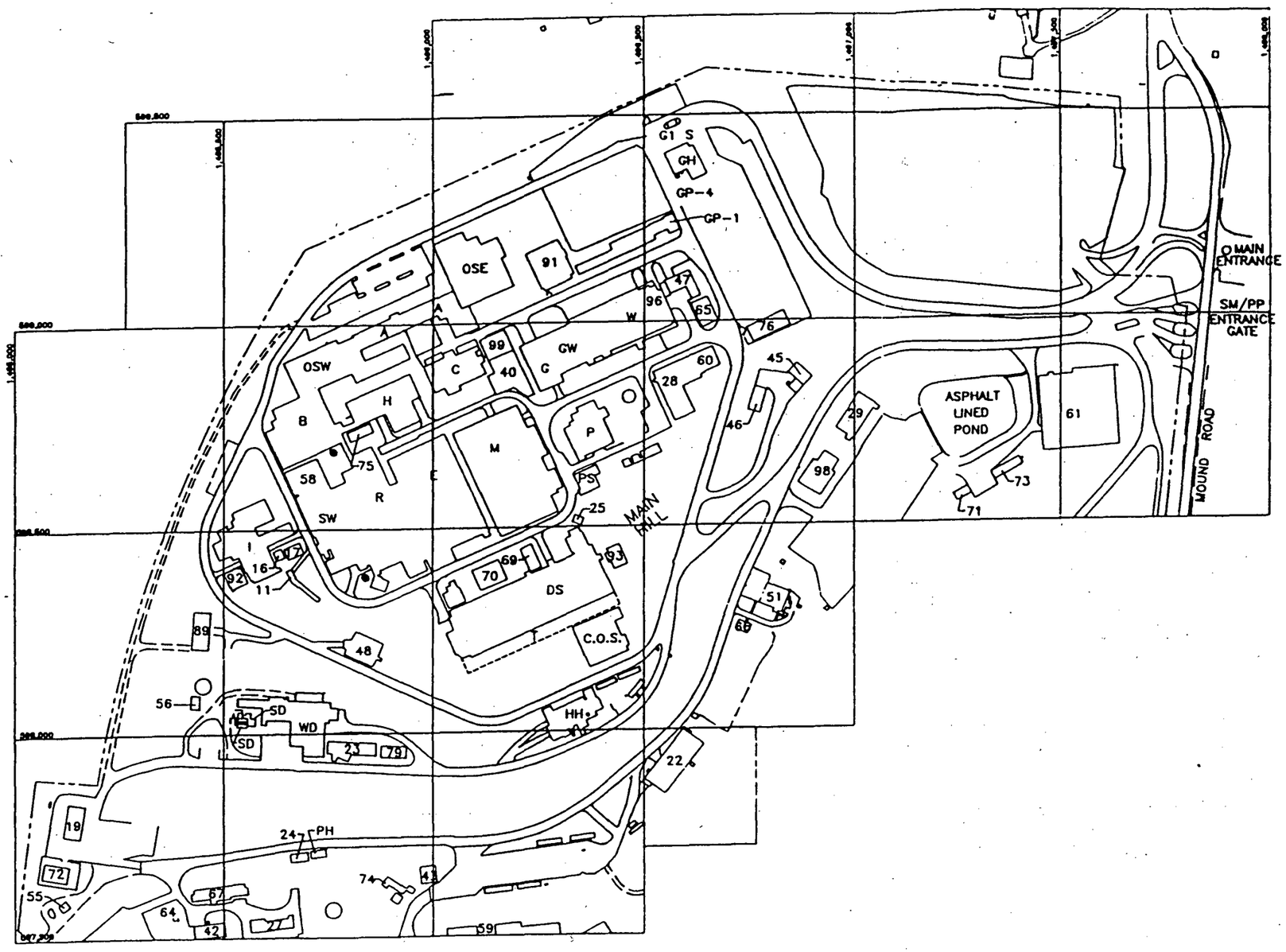

N

0 75 150 300
Scale in Feet

NOTES:

1. THE ELECTRONIC BASE MAP DATA FILE WAS OBTAINED BY ICF KAISER ENGINEERS, CINCINNATI, OHIO, FROM ROY F. WESTON, INC., ALBUQUERQUE, NEW MEXICO, WHO OBTAINED IT FROM WOOLPERT CONSULTANTS, INC., DAYTON, OHIO. THE DATA WERE PHOTOGRAMMETRICALLY COMPILED FROM AERIAL PHOTOGRAPHY DATED 12/08/85.

2. WESTON CONVERTED MOUND PLANT COORDINATES TO OHIO STATE PLANE COORDINATES USING AN ALGORITHM PROVIDED BY OAK RIDGE NATIONAL LABORATORY, GRAND JUNCTION PROJECT OFFICE.

LEGEND:

- 53 STRUCTURES
- PAVED ROADWAY
- UNPAVED ROADWAY
- MOUND PLANT BOUNDARY

Figure 2.2. Main Hill Areas and Buildings at Mound Plant

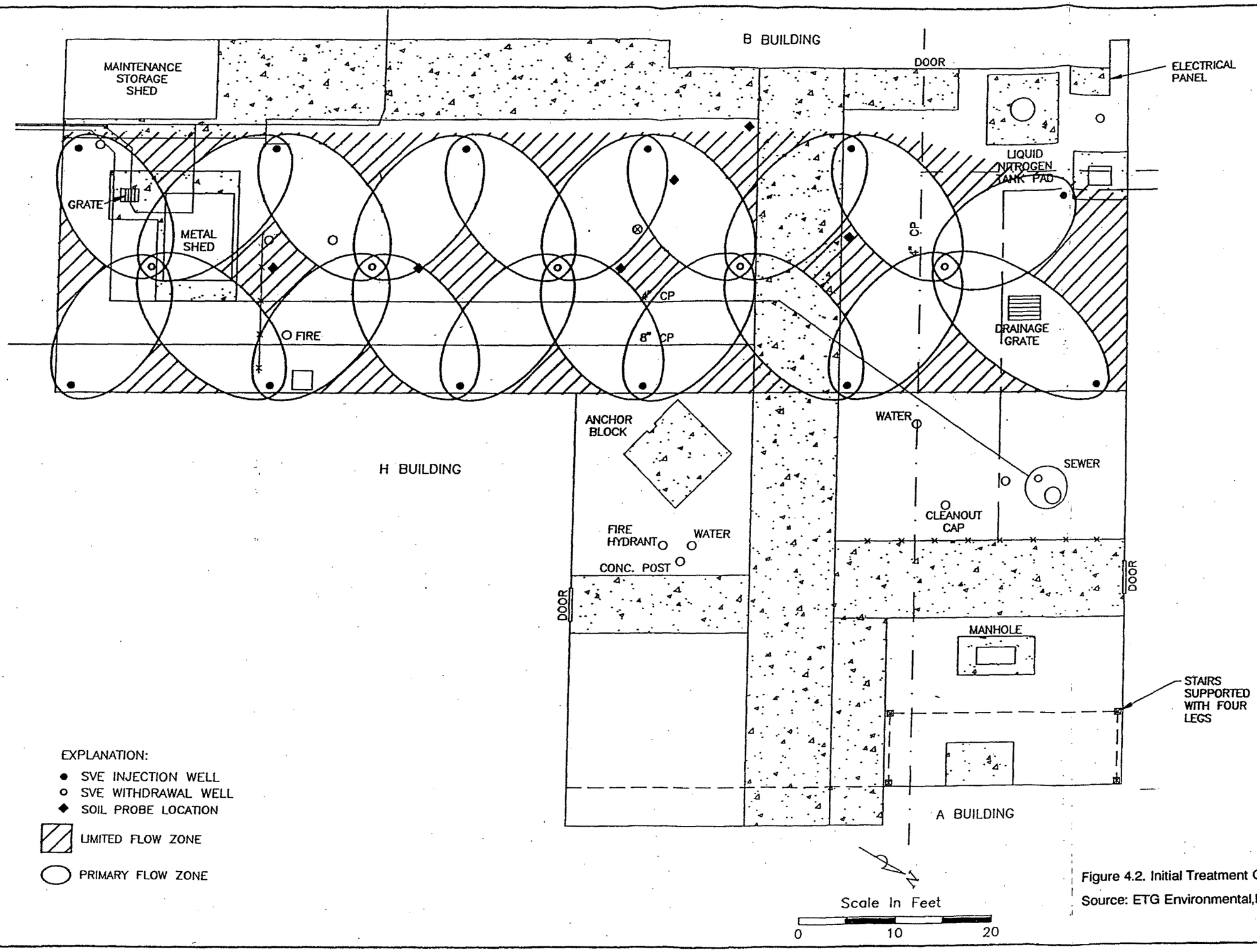

Figure 4.2. Initial Treatment Configuration
Source: ETG Environmental,Inc.

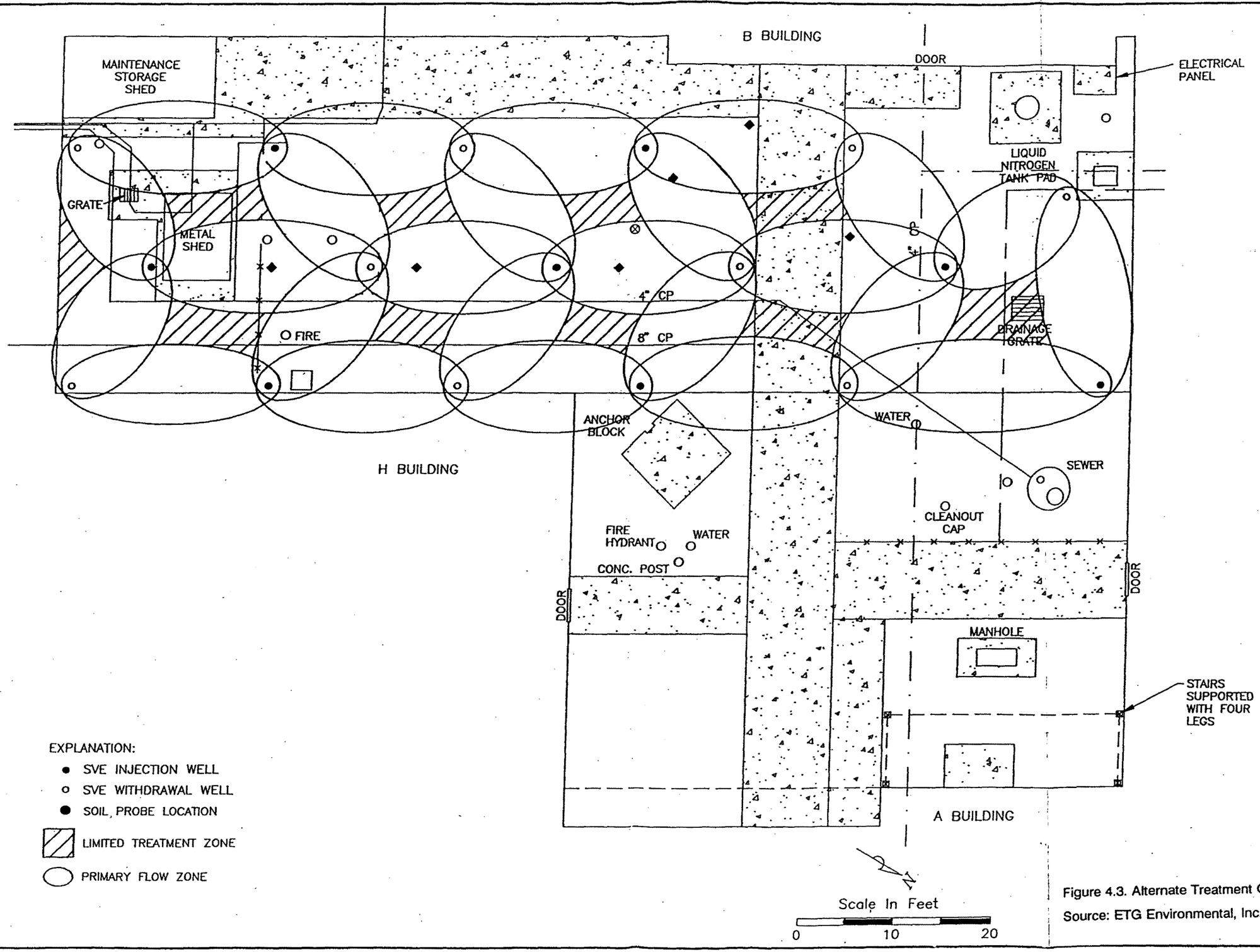

Figure 4.3. Alternate Treatment Configuration

Source: ETG Environmental, Inc.

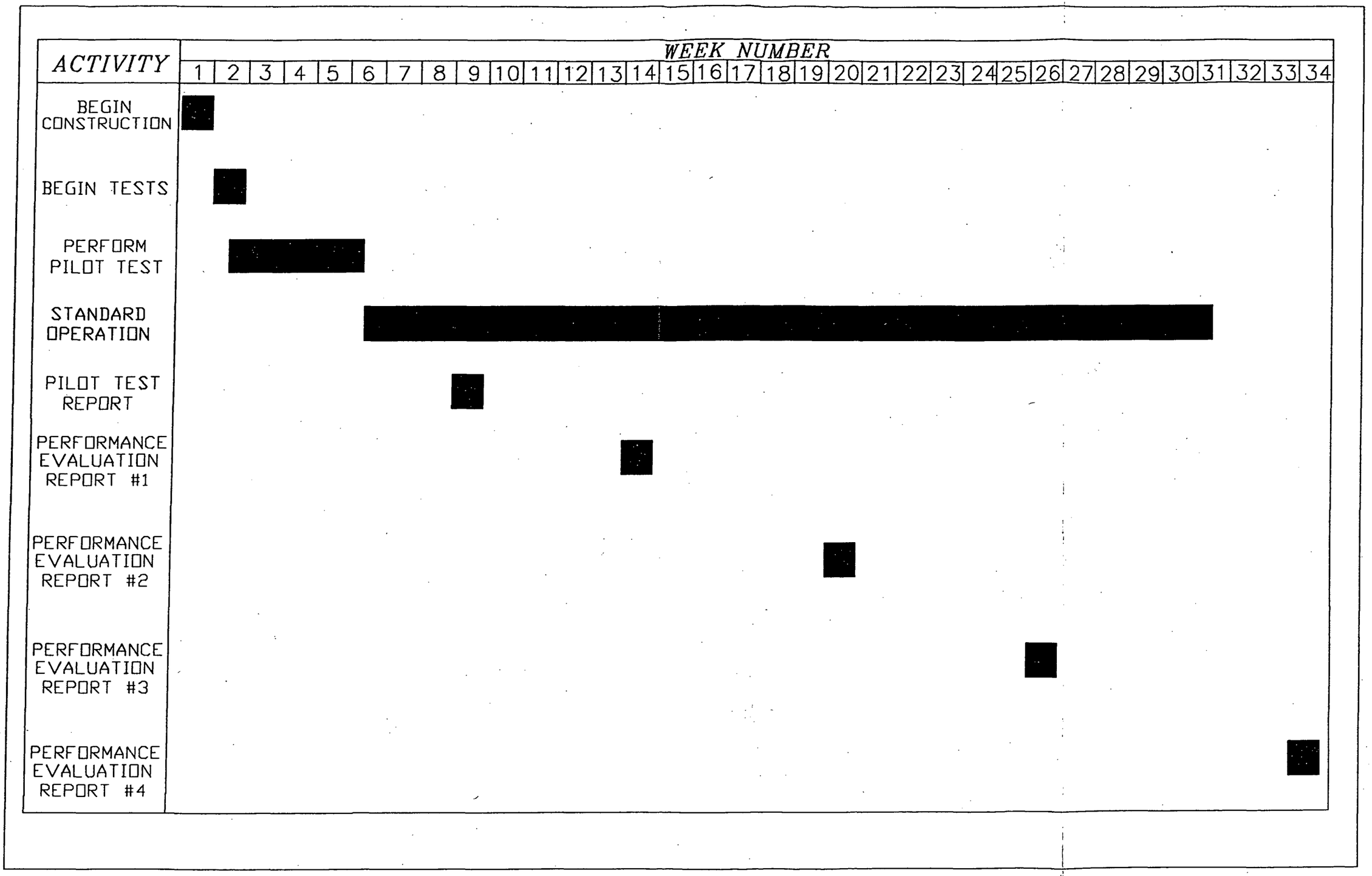

\50983\FIG6-1

Table 6.1. Construction, Operation, and Reporting Schedule