300405-0605090008

CH2M HILL Mound, Inc.
1075 Mound Road
P.O. Box 750
Miamisburg, OH 45343-0750

CH2MHILL

SMO-232/06
March 30, 2006

Mr. Don Pfister, Director
Miamisburg Closure Project
U. S. Department of Energy
175 Tri-County Parkway
Springdale, OH 45246

ATTENTION: Paul Lucas

SUBJECT: **Contract No. DE-AC24-03OH20152:** Deliverable #39 Potential release site and removal action documentation; Section C.2.3.1.3 Remaining Response Actions; PRS 17 OSC Report, Final

Dear Mr. Pfister:

Attached is the following Final document for your records:

- PRS 17 OSC Report, Final

If you or members of your staff have any questions regarding the document, or if additional support is needed, please contact Dave Rakel at 937-865-4203.

Sincerely,

Michael D. Ebben
Site Manager

ME/jg

Enclosures

cc: T. Fischer, USEPA, (1) w/attachments
B. Nickel, OEPA, (1) w/attachments
S.Helmer, ODH, (1) w/attachments
J. Colleli, ODH, (1) w/attachments
M. Wojciechowski, Tetra Tech, (1) w/attach
G. Gorsuch, DOE/MCP, (1) w/attachments
R. Tormey, DOE/OH, (1) w/attachments
G. Desai, DOE/HQ, (1) w/attachments
C. Kline, CH2M Hill, (1) w/attachments
F. Bullock, MMCIC (2) w/attachments
Public Reading Room (1) w/attachments
Admin Records, CH2M Hill, (2) w/attachs
ER Records, CH2M Hill, (1) w/attachs
DCC (1) w/attachments
M. Ebben, CH2M Hill, w/o attachments
K. Armstrong, CH2M Hill, w/o attachments
D. Rakel, CH2M Hill, w/o attachments
D. Kramer, CH2M Hill, w/o attachments
J. Fontaine, CH2M Hill, w/o attachments
MOAT Coordinator, CH2M Hill, w/o attachs
S. Barr, CH2M Hill, w/o attachments
M. McDougal, CH2M Hill, w/o attachments
file, CH2M Hill, w/o attachments

300405-0605090008

PRS 17
REMOVAL ACTION

OSC REPORT

March 2006

Final

Department of Energy
Miamisburg Closure Project

CH2MHILL

O:\SHARED\ER\PRS 017\OSC REPORT\17 OSC DraftFinalMar06.doc
03/25/06 @ 11:34 AM

PRS 17

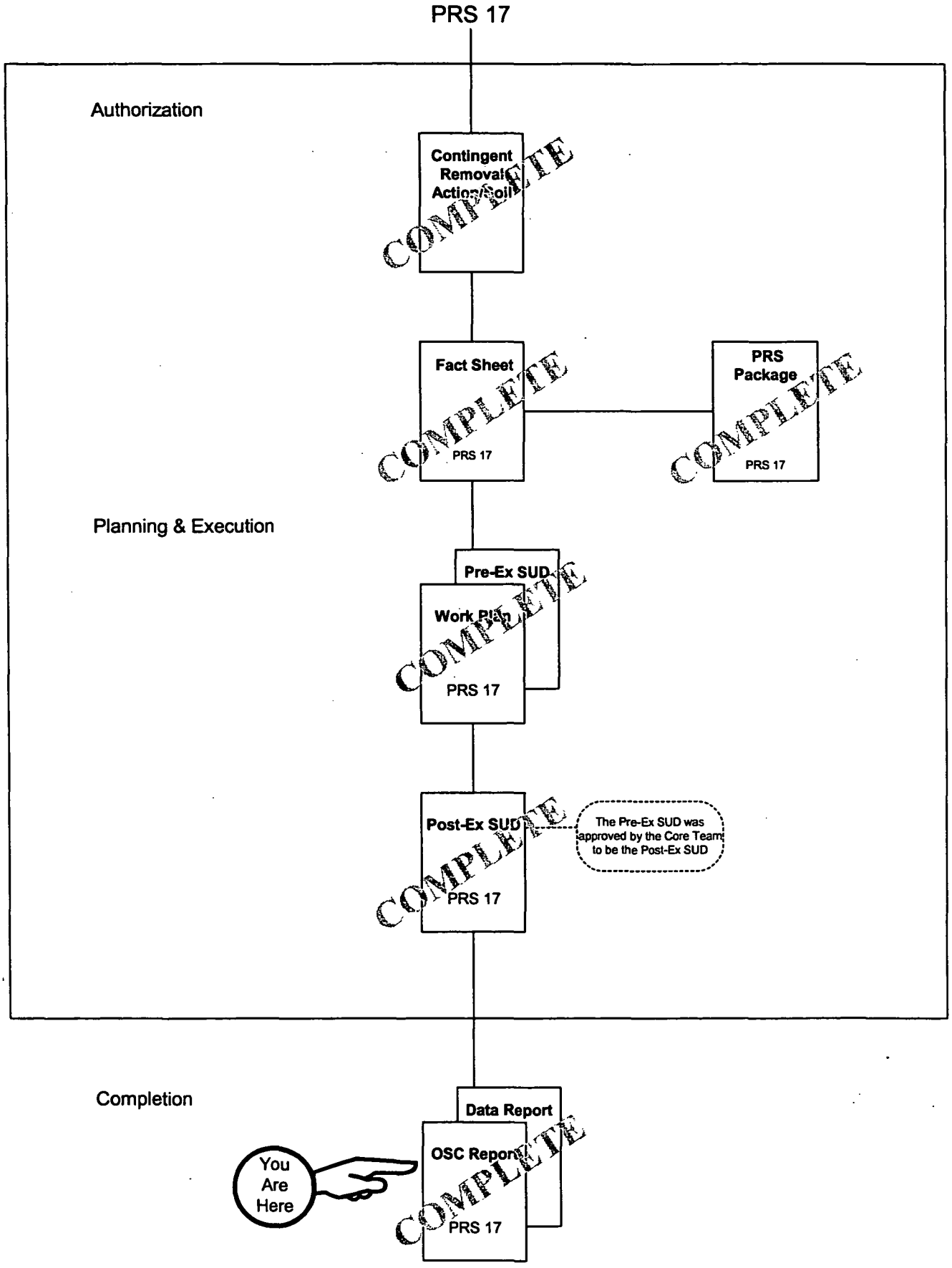

4Dec05dck

TABLE OF CONTENTS

(continued)

Section **Page**

RECOMMENDATION iii

1.0 SUMMARY OF EVENTS 1
- 1.1 Site Conditions and Background 1
- 1.2 Organization of the Removal Actions 1
- 1.3 Objectives 2
- 1.4 Chronological Narrative of the Removal Actions 3

2.0 EFFECTIVENESS OF THE REMOVAL ACTIONS 3
- 2.1 Actions Taken by Mound Personnel 4
- 2.2 Actions Taken by Local, State, and Federal Agencies 4
- 2.3 Actions Taken by Subcontractors 4

3.0 DIFFICULTIES ENCOUNTERED 4
- 3.1 Items that Affect the Removal Actions 4
- 3.2 Issues of Intergovernmental Coordination 4

4.0 RECOMMENDATIONS 5
- 4.1 Means to Prevent a Recurrence 5

Tables

Table 1: Organization of the Removal Action 2
Table 2: Materials and Disposition 2
Table 3: Removal Cost 3
Table 4: Cleanup Criteria 3
Table 5: Chronology of RA 4

Attachments

Attachment A Data Report
- Figure 1: Location of PRS 17
- Figure 2: Verification Sample Locations
- Table 1: Offsite Verification Results
- Table 2: Onsite Gamma Spec Results

Attachment B General Media Information
Attachment C Photograph Documentation

Acronyms

CERCLA	Comprehensive Environmental Response, Compensation, and Liability Act
CO	cleanup objective
COC	contaminant of concern
cy	cubic yards
DOE	Department of Energy
EE/CA	Engineering Evaluation/Cost Analysis
HS	hot spot
MCP	Miamisburg Closure Project
OEPA	Ohio Environmental Protection Agency
OSC	On-Scene Coordinator
PAH	polynuclear aromatic hydrocarbon
PRP	Potentially Responsible Parties
PRS	Potential Release Site
RA	Removal Action
UCL	upper confidence limit
USEPA	United States Environmental Protection Agency
VSAP	Verification Sampling and Analysis Plan

RECOMMENDATION: PRS 17

The PRS 17 Removal Action (RA) was authorized via the Contingent **Action Memo**, (Action Memorandum EE/CA, Contingent Removal Action for Contaminated Soil, Final, June 2002) and Public **Fact Sheet** for PRS 17: Building 34 Oil Burn Structure, Final, April 2005. The RA was based on historical processes and sample results which showed elevated levels of lead and benzo(g,h,i)perylene.

The remaining structure and sediment within the structure were removed per the Contingent Action Memo and the PRS 17 Standard **Work Plan**, Final, September 2005. Verification sampling and analysis was performed in accordance with the Standard Soils Verification Sampling & Analysis Plan (**VSAP**), Final, August 2004 to demonstrate that the remaining soil meets the cleanup criteria.

This removal action was successfully completed and resulted in the removal and disposal of approximately 215 cubic yards (cy) of debris/sediment (for disposal at Envirocare). Soil below the structure was sampled. The contaminants of concern (COCs) were lead and benzo(g,h,i)perylene. All results are below COs.

After a thorough review of the PRS 17 OSC Report, the Core Team agrees that the PRS 17 Removal Action is complete, and that all previously existing environmental issues associated with the PRS 17 Removal Action have been resolved.

Paul Lucas 1/12/06

Paul Lucas, OSC
U.S. Department of Energy
Springdale, Ohio

Timothy J. Fischer 1/10/06

Timothy J. Fischer, Remedial Project Manager
USEPA
Chicago, Illinois

Brian Nickel 1/11/06

Brian Nickel, Project Manager
OEPA
Dayton, Ohio

This page intentionally left blank.

1.0 SUMMARY OF EVENTS

This section describes the site background and events leading up to the removal action (RA), parties involved in responding to the RA, cleanup objective (CO) determination, chronological narrative of the RA, and resources committed to complete the project.

1.1 Site Conditions and Background

The levels of chemical contamination present at PRS 17 warranted a RA under CERCLA (Comprehensive Environmental Response, Compensation, and Liability Act).

The Potential Release Site (PRS) 17 Removal Action was authorized via the Contingent **Action Memo**, (Action Memorandum EE/CA, Contingent Removal Action for Contaminated Soil, Final, June 2002) and Public **Fact Sheet** for PRS 17: Building 34 Oil Burn Structure, Final, April 2005.

This On-Scene Coordinator (OSC) Report documents removal of debris and sediment from PRS 17; location shown on Figure 1 (A7/49). Debris and sediment were removed per the Contingent Action Memo and the PRS 17 Standard **Work Plan**, Final, September 2005. Verification sampling and analysis was performed in accordance with the Standard Soils Verification Sampling & Analysis Plan (**VSAP**), Final, August 2004 to demonstrate that the remaining soil meets the cleanup criteria.

Since the Department of Energy (DOE) is the sole responsible party for cleanup of PRS 17, no Potentially Responsible Parties (PRPs) were sought to clean up the site. Monsanto Research Corporation, EG&G Mound Applied Technologies, and BWXT of Ohio, Inc were the operating contractors at the site from 1948 to 30 September 1988, from 1 October 1988 until 30 September 1997, and from 1 October 1997 until 31 December 2002 respectively. CH2M Hill Mound, Inc. became the site contractor for the Miamisburg Closure Project (MCP) effective January 1, 2003.

1.2 Organization of the Removal Actions

Table 1 lists the parties responding to the removal actions, and their responsibilities.

Table 1: Organization of the Removal Action

US Environmental Protection Agency (USEPA) SFR-5J 77 W. Jackson Street Chicago, IL 60604 312-353-2000	Timothy J. Fischer	Federal agency responsible for oversight
Ohio Environmental Protection Agency (OEPA) 401 E. Fifth Street Dayton, OH 45402-2911 937-285-6357	Brian K. Nickel	State agency responsible for oversight
US Dept. of Energy Miamisburg Closure Project 175 Tri-County Parkway Springdale, OH 45246 513-246-0071	Paul Lucas	On-scene Coordinator responsible for oversight and success
CH2M HILL Environmental Restoration Project 1 Mound Road Miamisburg, OH 45343-3030 937-608-8220	Jim Fontaine	Provide OSC with technical assistance, administrative support, field oversight, sample management, site safety, photo, site documentation, and preparation of the OSC Report

1.3 Objectives

The objectives of this OSC Report are to describe the PRS 17 RA fieldwork and document successful completion of the project.

Removal Action Objectives: The objectives for the removal action included:

- Project Planning
- Public Notification
- Site Preparation
- Excavation (was not required due to sample results below CO)
- Verification
- Site Restoration
- Documentation of Completion

Material quantities and disposition locations are presented in Table 2. The cost breakdown of the removal actions is presented in Table 3.

Table 2: Materials and Disposition

Type of Material	Quantity (cy)	Disposal Method	Disposal Location
Debris/sediment	215	Rail transport	Envirocare of Utah

Table 3: Removal Cost

Cost Category	Cost ($)
Planning/Fieldwork/ Restoration/grading/seeding	25,000
Transportation/Disposal of debris/sediment	50,000
Verification Sampling, Analyses, & Data Validation	20,000
Closure Documentation	15,000
Estimated Total Project Cost	**110,000**

The Cleanup Objective for contaminants of concern (COCs) identified in the PRS 17 Fact Sheet are presented in Table 4. The CO for benzo(g,h,i)perylene was errantly reported in the Fact Sheet as 0.41 mg/kg; but was corrected as 4.1 mg/kg in Table 4. The Risk-Based Guideline Value for benzo(a)pyrene (4.1 mg/kg) is used as the cleanup objective for benzo(g,h,i)perylene because there is no guideline or background value for benzo(g,h,i)perylene and the benzo(a)pyrene guideline value is the most conservative of any of the Polynuclear Aromatic Hydrocarbon (PAH) compounds.

The **cleanup criteria** are satisfied if all verification sample results are below CO or all sample results are below hot spot (HS) criteria and the 95% UCL (upper confidence limit) for the area of interest is less than the CO and the data set passes the Sign test.

Table 4: Cleanup Criteria (mg/kg)

COC	Cleanup Objective	Hot Spot Criteria
lead	448	not applicable
benzo(g,h,i)perylene	4.1	41

Cleanup Objective. All final verification results for PRS 17 were below their respective COs as identified in the Data Report, Table 1 (A10/49 – A22/49).

Hot Spot Criteria. The Hot Spot criteria for the COCs are presented in Table 4. There were no sample results that exceeded the hot spot criteria for any analyte.

1.4 Chronological Narrative of the Removal Actions

Table 5 presents a chronological narrative of events surrounding the PRS 17 RA.

2.0 EFFECTIVENESS OF THE REMOVAL ACTIONS

The PRS 17 removal action is complete, and the objectives of the Action Memorandum have been met. The limits of verification are identified on Figure 2 (see A8/49). Results of verification sampling and analysis are provided in Appendix A, and photographs of the site remediation are provided in Appendix C (C1/1).

Table 5: Chronology of RA

Timeframe	Activity
April 2004	PRS 17 Fact Sheet approved
September 2005	Standard Work Plan for PRS 17 approved
September 2005	PRS 17 RA activities, and verification sampling & analysis
December 2005	PRS 17 OSC Report prepared

2.1 Actions Taken by Mound Personnel

CH2M Hill Mound, Inc. personnel planned and performed removal action oversight, and performed the RA, monitoring, sampling and analyses, documentation, validation, and transportation of debris and sediment to the designated onsite soil staging area. Photographic documentation is presented in Appendix C. The project met the removal action objectives (Section 1.3), as outlined in the Action Memorandum. CH2M Hill Mound, Inc. personnel prepared this OSC Report, which shows that the Removal Action objectives were achieved.

2.2 Actions Taken by Local, State, and Federal Agencies

The DOE/MCP, USEPA, and OEPA had oversight responsibility for the removal action. The DOE/MCP was the lead agency for the RA and provided the funding and oversight for the RA. The USEPA and OEPA had oversight responsibility for the RA and review of the Action Memorandum and OSC Report to ensure that the objectives were met.

2.3 Actions Taken by Subcontractors

Subcontractors involved in the project included:

- Severn Trent Laboratories, Inc. of Missouri – offsite analysis of soil samples.
- Envirocare of Utah - disposal of debris/sediment via rail transport.

3.0 DIFFICULTIES ENCOUNTERED

3.1 Items that Affect the Removal Actions

No difficulties were encountered during the removal.

3.2 Issues of Intergovernmental Coordination

All DOE/OEPA/USEPA interactions were good. The agencies were updated informally on a regular basis, and formally at monthly Core Team meetings. The Mound 2000 Process worked well.

4.0 RECOMMENDATIONS

4.1 Means to Prevent a Recurrence

The debris/sediment was removed. Mound Removal Actions have regulator approved work plans, each of which has a section that addresses runon/runoff controls. In addition, the site Storm Water Pollution Prevention Plan applies to the entire site and is monitored by the Environmental Compliance and Analytical Services group. As a result of the removal and runon/runoff protection, spread of contamination is prevented. After the removal action and the CERCLA process for the parcel are complete, the area will be transferred from Federal to private ownership. All State and Federal disposal rules will apply.

ATTACHMENT A

DATA REPORT

DATA REPORT

PRS 17

December 2005

Rev. 0

Department of Energy

Miamisburg Closure Project

CH2MHILL

03/14/06 @ 9:32 AM

A 1/49

This page intentionally left blank.

Table of Contents

Section		Page
1.0	PURPOSE	1
2.0	DOCUMENT ORGANIZATION / SUMMARY	1
3.0	FIELD ACTIVITIES	1
4.0	DATA REVIEW / VALIDATION	2

Figures

Figure 1: Location of PRS 17 ..... A7/49

Figure 2: Verification Sample Locations A8/49

Tables

Table 1: Offsite Verification Results A10/49

Table 2: Onsite Gamma Spec Results A23/49

Appendices

Appendix A Figures A6/49

Appendix B Tables A9/49

Appendix C Excerpt from Pre-Ex SUD A25/49

Appendix D Statistical Information A32/49

Appendix E Data Review & Validation A35/49

Acronyms

CO	cleanup objective
COC	contaminant of concern
OEPA	Ohio Environmental Protection Agency
PRS	Potential Release Site
QC	quality control
RA	removal action
R&V	review and validation
SAR	Soil Analysis Report
SUD	Survey Unit Design
VSAP	Verification Sampling and Analysis Plan

1.0 PURPOSE

This Data Report provides documentation of sampling activities specified in the following documents; required to close out Potential Release Site (PRS) 17 which is shown on Figure 1. The Pre-Ex SUD (Survey Unit Design) was approved by the Core Team to be the Post-Ex SUD.

- Standard VSAP, Verification Sampling and Analysis Plan, Final, August 2004, and
- PRS 17: Removal Action for Building 34 Oil Burn Structure, Pre-Ex SUD, Draft Proposed Final, April 2005.

The purposes of this Data Report are to:

- document the verification of PRS 17,
- describe any variances to the VSAP, and
- present the analytical results.

2.0 DOCUMENT ORGANIZATION / SUMMARY

The PRS 17 removal action (RA) was verified as described in Section 3. Contaminants of concern (COCs) are identified in the Pre-Ex SUD, an excerpt of which is included as Appendix C. Unless otherwise specified as a variance, sampling and analyses were conducted in accordance with the VSAP and Core Team-approved Pre-Ex SUD (see Appendix C).

3.0 FIELD ACTIVITIES

Verification sampling occurred in September 2005 and included collection of 8 samples at locations shown on Figure 2. All samples were submitted for onsite gamma spec analysis, offsite semivolatile organic compound (SVOC) analysis via Method A-028 of the Methods Compendium (EPA Method 8270), and offsite lead analysis per Method A-005 (CLP Metals). Offsite results are reported in Table 1 (Appendix B), which includes cleanup objectives for comparison purposes. Onsite gamma spec results are reported in Table 2. Sampling was performed in accordance with the Pre-Ex SUD, and excerpt of which is included in Appendix C. Per the Standard VSAP, statistical information,

provided in Appendix D, includes calculation of standard deviation and recalculation of N (number of samples).

Variance 1. The Pre-Ex SUD, as well as the Fact Sheet, erroneously identified the CO for benzo(g,h,i)perylene as 0.41mg/kg. It was corrected herein as 4.1 mg/kg.

Variance 2. Per the Pre-Ex SUD, the Ohio Environmental Protection Agency (OEPA) intended to collect bias samples but opted later to not collect them.

Variance 3. The number of samples (N) was recalculated to be nine but only eight verification samples were collected. Per the Standard VSAP, an area less than 100m^2 requires a minimum of six samples. Since the area verified was less than 100 m^2 (87 m^2), eight samples were deemed sufficient.

4.0 DATA REVIEW / VALIDATION

All data were reviewed and 10% of offsite data were validated.

Field and laboratory QC (quality control) were assessed as part of the data review and validation (R&V) process.

Documentation of review and validation (and related variances) is provided in Appendix F. Review and validation supports that the data are usable.

APPENDIX A

FIGURES

This page intentionally left blank.

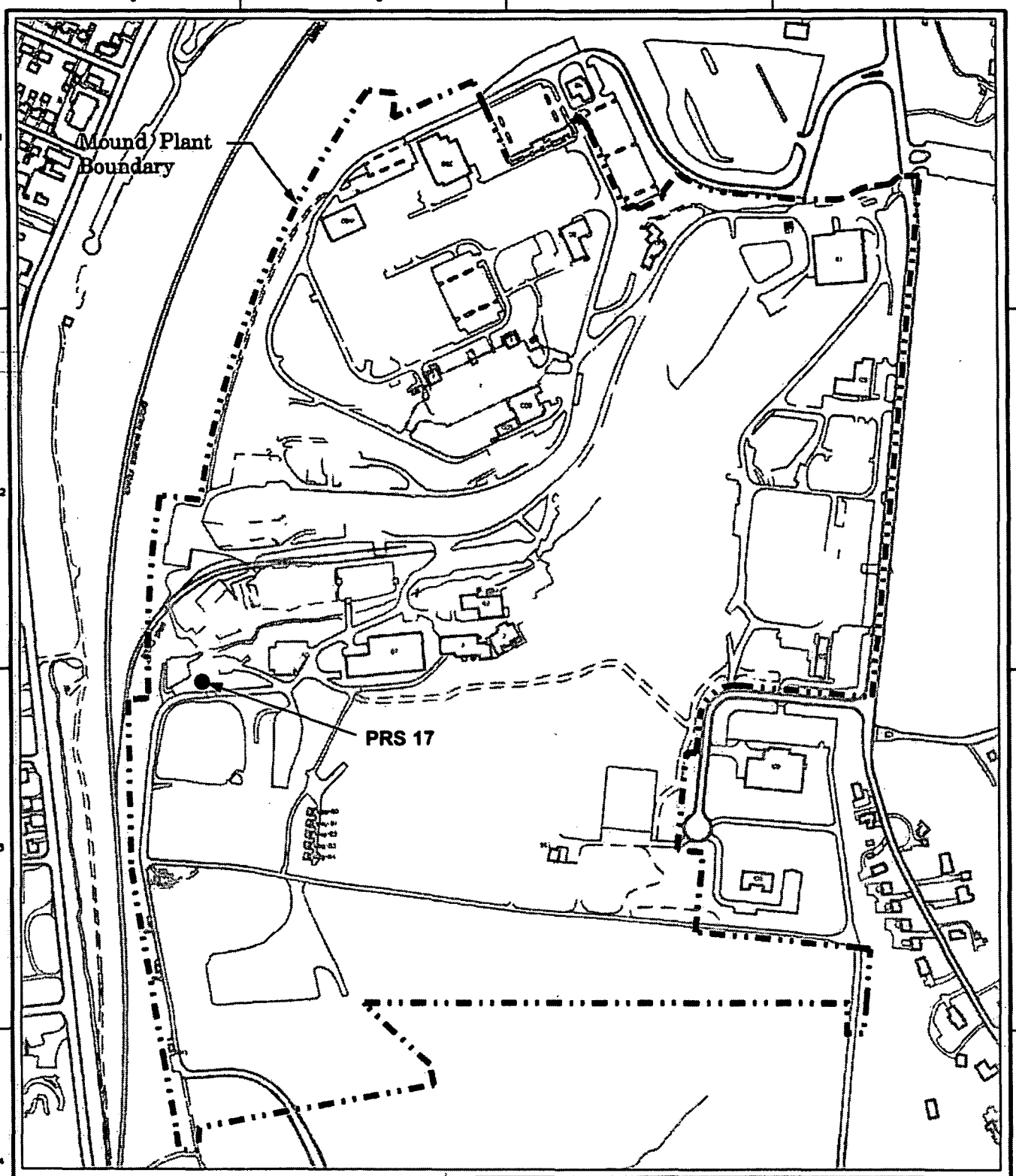

Legend

Structures
Paved roadway
Unpaved roadway
Mound Plant boundary
Railroad

0 100 200 400 600 800 1000
Scale in Feet

MOUND
Environmental Restoration Geographic Information System

Figure 1:
Location of PRS 17

10/18/05		SSF						
DATE	REVISION	BY	CHKD	DWG	UPDT	APVD		

UNCLASSIFIED | gen_site_plan.dgn
SYE | ER-GIS | SCALE | SHEET 1 OF
STATUS MD-REL-00/00/00 | MSTATION / J

A7/49

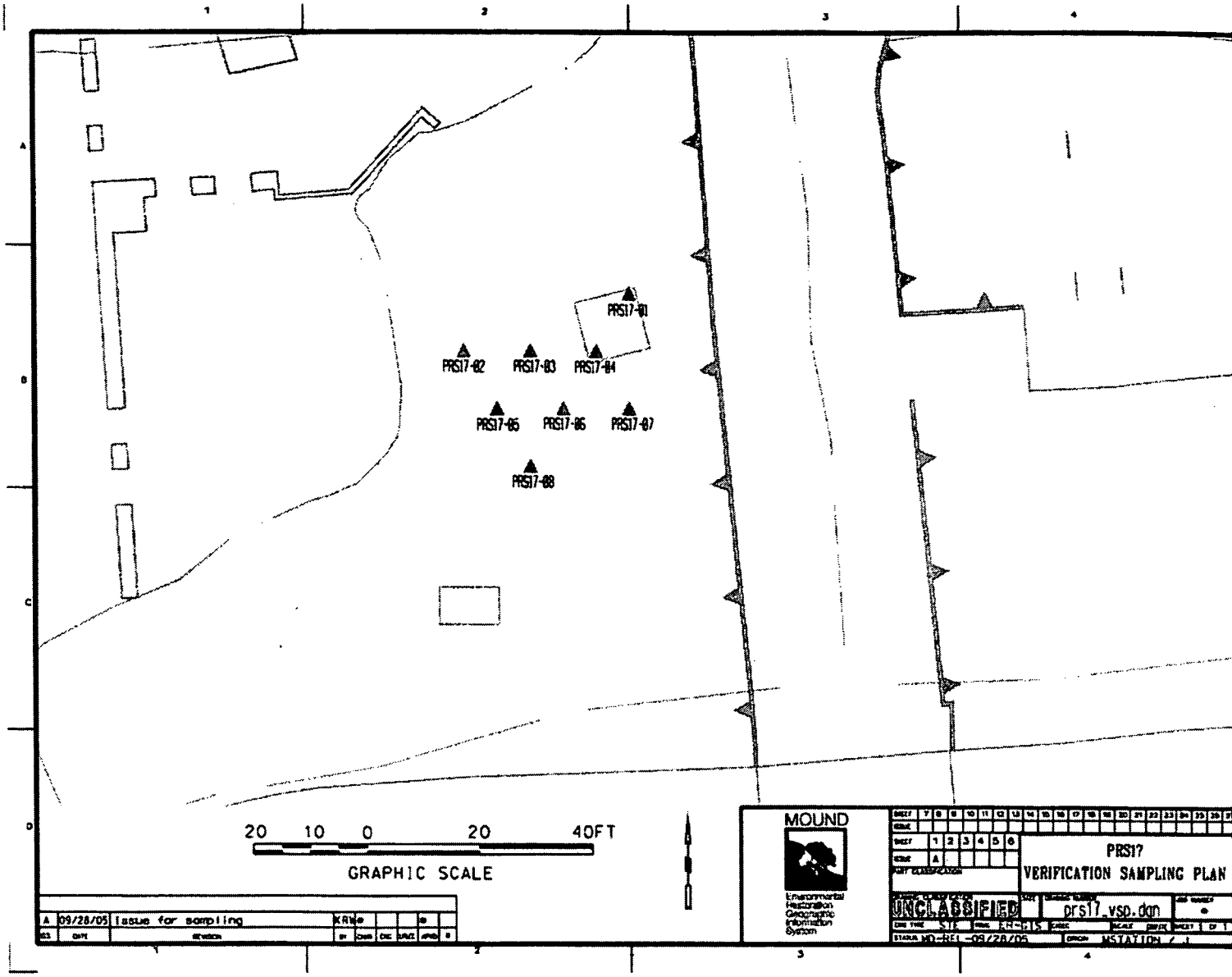

Figure 2: Verification Sample Locations

APPENDIX B

TABLES

Table 1: Offsite Verification Results (mg/kg)

[data acquired from MEIMS]

Date	Location	Analyte	CO	Result	DL	Lab Qual	Data Qual	X Coord	Y Coord
09/28/2005	PRS-17-01	1,2,4-Trichlorobenzene	2.13E+03	0.35	0.35	U		1464132.721	597701.403
09/28/2005	PRS-17-01	1,2-Dichlorobenzene	1.92E+04	0.35	0.35	U		1464132.721	597701.403
09/28/2005	PRS-17-01	1,3-Dichlorobenzene	6.38E+03	0.35	0.35	U		1464132.721	597701.403
09/28/2005	PRS-17-01	1,4-Dichlorobenzene	1.54E+09	0.35	0.35	U		1464132.721	597701.403
09/28/2005	PRS-17-01	1-chloro-4-phenoxybenzene	NC	0.35	0.35	U		1464132.721	597701.403
09/28/2005	PRS-17-01	2,2'-oxybis(1-chloropropane)	8.52E+03	0.35	0.35	U		1464132.721	597701.403
09/28/2005	PRS-17-01	2,4,5-Trichlorophenol	2.13E+04	0.35	0.35	U		1464132.721	597701.403
09/28/2005	PRS-17-01	2,4,6-Trichlorophenol	NC	0.35	0.35	U		1464132.721	597701.403
09/28/2005	PRS-17-01	2,4-Dichlorophenol	6.39E+02	0.35	0.35	U		1464132.721	597701.403
09/28/2005	PRS-17-01	2,4-Dimethylphenol	4.26E+03	0.35	0.35	U		1464132.721	597701.403
09/28/2005	PRS-17-01	2,4-Dinitrophenol	4.26E+02	1.70	1.7	U		1464132.721	597701.403
09/28/2005	PRS-17-01	2,4-Dinitrotoluene	4.26E+02	0.35	0.35	U		1464132.721	597701.403
09/28/2005	PRS-17-01	2,6-Dinitrotoluene	2.13E+02	0.35	0.35	U		1464132.721	597701.403
09/28/2005	PRS-17-01	2-Chloronaphthalene	1.70E+04	0.35	0.35	U		1464132.721	597701.403
09/28/2005	PRS-17-01	2-Chlorophenol	1.06E+03	0.35	0.35	U		1464132.721	597701.403
09/28/2005	PRS-17-01	2-Methylnaphthalene	8.52E+02	0.10	0.35	J		1464132.721	597701.403
09/28/2005	PRS-17-01	2-Methylphenol	1.06E+04	0.35	0.35	U		1464132.721	597701.403
09/28/2005	PRS-17-01	2-Nitroaniline	6.39E+01	1.70	1.7	U		1464132.721	597701.403
09/28/2005	PRS-17-01	2-Nitrophenol	NC	0.35	0.35	U		1464132.721	597701.403
09/28/2005	PRS-17-01	3,3'-Dichlorobenzidine	NC	1.70	1.7	U		1464132.721	597701.403
09/28/2005	PRS-17-01	3-Nitroaniline	6.39E+01	1.70	1.7	U		1464132.721	597701.403
09/28/2005	PRS-17-01	4,6-Dinitro-o-Cresol	NC	1.70	1.7	U		1464132.721	597701.403
09/28/2005	PRS-17-01	4-Bromophenyl-phenyl Ether	NC	0.35	0.35	U		1464132.721	597701.403
09/28/2005	PRS-17-01	4-Chloro-3-methylphenol	NC	0.35	0.35	U		1464132.721	597701.403
09/28/2005	PRS-17-01	4-Chloroaniline	8.52E+02	0.35	0.35	U		1464132.721	597701.403
09/28/2005	PRS-17-01	4-Methylphenol	1.06E+03	0.70	0.7	U		1464132.721	597701.403
09/28/2005	PRS-17-01	4-Nitroaniline	6.39E+02	1.70	1.7	U		1464132.721	597701.403
09/28/2005	PRS-17-01	4-Nitrophenol	NC	1.70	1.7	U		1464132.721	597701.403
09/28/2005	PRS-17-01	Acenaphthene	1.28E+04	0.60	0.35			1464132.721	597701.403
09/28/2005	PRS-17-01	Acenaphthylene	1.28E+04	0.35	0.35	U		1464132.721	597701.403
09/28/2005	PRS-17-01	Aluminum	2.13E+05	3570.00	21.1	N		1464132.721	597701.403
09/28/2005	PRS-17-01	Anthracene	6.39E+04	1.30	0.35			1464132.721	597701.403
09/28/2005	PRS-17-01	Antimony	8.52E+01	1.10	1.1	UN		1464132.721	597701.403
09/28/2005	PRS-17-01	Arsenic	6.39E+01	4.60	1.1			1464132.721	597701.403
09/28/2005	PRS-17-01	Barium	1.49E+04	30.00	21.1			1464132.721	597701.403
09/28/2005	PRS-17-01	Benzo(a)anthracene	NC	2.80	0.35			1464132.721	597701.403
09/28/2005	PRS-17-01	Benzo(a)pyrene	4.08E+00	2.50	0.35			1464132.721	597701.403
09/28/2005	PRS-17-01	Benzo(b)fluoranthene	4.08E+01	2.30	0.35			1464132.721	597701.403
09/28/2005	PRS-17-01	Benzo(g,h,i)perylene	NC	1.40	0.35			1464132.721	597701.403
09/28/2005	PRS-17-01	Benzo(k)fluoranthene	4.08E+02	2.10	0.35			1464132.721	597701.403
09/28/2005	PRS-17-01	Beryllium	4.21E+02	0.31	0.53	B		1464132.721	597701.403
09/28/2005	PRS-17-01	Bis(2-chloroethoxy)methane	NC	0.35	0.35	U		1464132.721	597701.403
09/28/2005	PRS-17-01	Bis(2-chloroethyl)ether	4.26E+03	0.35	0.35	U		1464132.721	597701.403
09/28/2005	PRS-17-01	Bis(2-ethylhexyl)phthalate	4.26E+03	0.18	0.35	J		1464132.721	597701.403
09/28/2005	PRS-17-01	Butyl Benzyl Phthalate	4.26E+04	0.08	0.35	J		1464132.721	597701.403
09/28/2005	PRS-17-01	Cadmium	2.13E+02	0.53	0.53	U		1464132.721	597701.403
09/28/2005	PRS-17-01	Calcium	NC	132000.00	5280	N		1464132.721	597701.403
09/28/2005	PRS-17-01	Carbazole	NC	0.75	0.35			1464132.721	597701.403
09/28/2005	PRS-17-01	Chromium	3.19E+05	11.70	1.1	NE		1464132.721	597701.403
09/28/2005	PRS-17-01	Chrysene	NC	3.10	0.35			1464132.721	597701.403
09/28/2005	PRS-17-01	Cobalt	1.28E+04	4.00	5.3	B		1464132.721	597701.403
09/28/2005	PRS-17-01	Copper	8.52E+03	88.30	2.6	N		1464132.721	597701.403
09/28/2005	PRS-17-01	Dibenz(a,h)anthracene	4.08E+00	0.46	0.35			1464132.721	597701.403
09/28/2005	PRS-17-01	Dibenzofuran	8.52E+02	0.37	0.35			1464132.721	597701.403
09/28/2005	PRS-17-01	Diethyl Phthalate	1.70E+05	0.35	0.35	U		1464132.721	597701.403
09/28/2005	PRS-17-01	Dimethyl Phthalate	NC	0.35	0.35	U		1464132.721	597701.403
09/28/2005	PRS-17-01	Di-n-butyl Phthalate	2.13E+04	0.35	0.35	U		1464132.721	597701.403
09/28/2005	PRS-17-01	Di-n-octyl Phthalate	4.26E+03	0.35	0.35	U		1464132.721	597701.403
09/28/2005	PRS-17-01	Fluoranthene	8.52E+03	7.20	0.7	D		1464132.721	597701.403
09/28/2005	PRS-17-01	Fluorene	8.52E+03	0.66	0.35			1464132.721	597701.403
09/28/2005	PRS-17-01	Hexachlorobenzene	1.70E+02	0.35	0.35	U		1464132.721	597701.403
09/28/2005	PRS-17-01	Hexachlorobutadiene	1.27E+03	0.35	0.35	U		1464132.721	597701.403
09/28/2005	PRS-17-01	Hexachlorocyclopentadiene	1.27E+03	1.70	1.7	U		1464132.721	597701.403
09/28/2005	PRS-17-01	Hexachloroethane	2.13E+02	0.35	0.35	U		1464132.721	597701.403

Table 1: Offsite Verification Results (mg/kg)

[data acquired from MEIMS]

Date	Location	Analyte	CO	Result	DL	Lab Qual	Data Qual	X Coord	Y Coord
09/28/2005	PRS-17-01	Indeno(1,2,3-cd)pyrene	4.08E+01	1.70	0.35			1464132.721	597701.403
09/28/2005	PRS-17-01	Iron	NC	9540.00	10.6	N		1464132.721	597701.403
09/28/2005	PRS-17-01	Isophorone	4.26E+04	0.35	0.35	U		1464132.721	597701.403
09/28/2005	PRS-17-01	Lead	448	15.20	0.32	N		1464132.721	597701.403
09/28/2005	PRS-17-01	Magnesium	NC	36500.00	5280	NE		1464132.721	597701.403
09/28/2005	PRS-17-01	Manganese	2.28E+04	322.00	1.6	E		1464132.721	597701.403
09/28/2005	PRS-17-01	Mercury	1.69E+01	0.08	0.035	N		1464132.721	597701.403
09/28/2005	PRS-17-01	Molybdenum	1.06E+03	2.00	4.2	B		1464132.721	597701.403
09/28/2005	PRS-17-01	Naphthalene	4.26E+03	0.29	0.35	J		1464132.721	597701.403
09/28/2005	PRS-17-01	Nickel	4.26E+03	7.80	4.2			1464132.721	597701.403
09/28/2005	PRS-17-01	Nitrobenzene	1.06E+02	0.35	0.35	U		1464132.721	597701.403
09/28/2005	PRS-17-01	N-Nitroso-di-n-propylamine	NC	0.35	0.35	U		1464132.721	597701.403
09/28/2005	PRS-17-01	N-Nitrosodiphenylamine	NC	0.35	0.35	U		1464132.721	597701.403
09/28/2005	PRS-17-01	Pentachlorophenol	6.39E+03	1.70	1.7	U		1464132.721	597701.403
09/28/2005	PRS-17-01	Phenanthrene	NC	5.20	0.35			1464132.721	597701.403
09/28/2005	PRS-17-01	Phenol	1.28E+05	0.35	0.35	U		1464132.721	597701.403
09/28/2005	PRS-17-01	Potassium	NC	779.00	528			1464132.721	597701.403
09/28/2005	PRS-17-01	Pyrene	6.39E+03	5.10	0.35			1464132.721	597701.403
09/28/2005	PRS-17-01	Selenium	1.06E+03	0.23	0.53	B		1464132.721	597701.403
09/28/2005	PRS-17-01	Silver	1.06E+03	2.90	1.1	N		1464132.721	597701.403
09/28/2005	PRS-17-01	Sodium	NC	141.00	528	B		1464132.721	597701.403
09/28/2005	PRS-17-01	Thallium	1.70E+01	1.10	1.1	B		1464132.721	597701.403
09/28/2005	PRS-17-01	Vanadium	1.49E+03	9.30	2.1			1464132.721	597701.403
09/28/2005	PRS-17-01	Zinc	6.39E+04	124.00	2.1	N		1464132.721	597701.403
09/28/2005	PRS-17-02	1,2,4-Trichlorobenzene	2.13E+03	0.37	0.37	U		1464103.619	597691.322
09/28/2005	PRS-17-02	1,2-Dichlorobenzene	1.92E+04	0.37	0.37	U		1464103.619	597691.322
09/28/2005	PRS-17-02	1,3-Dichlorobenzene	6.38E+03	0.37	0.37	U		1464103.619	597691.322
09/28/2005	PRS-17-02	1,4-Dichlorobenzene	1.54E+09	0.37	0.37	U		1464103.619	597691.322
09/28/2005	PRS-17-02	1-chloro-4-phenoxybenzene	NC	0.37	0.37	U		1464103.619	597691.322
09/28/2005	PRS-17-02	2,2'-oxybis(1-chloropropane)	8.52E+03	0.37	0.37	U		1464103.619	597691.322
09/28/2005	PRS-17-02	2,4,5-Trichlorophenol	2.13E+04	0.37	0.37	U		1464103.619	597691.322
09/28/2005	PRS-17-02	2,4,6-Trichlorophenol	NC	0.37	0.37	U		1464103.619	597691.322
09/28/2005	PRS-17-02	2,4-Dichlorophenol	6.39E+02	0.37	0.37	U		1464103.619	597691.322
09/28/2005	PRS-17-02	2,4-Dimethylphenol	4.26E+03	0.37	0.37	U		1464103.619	597691.322
09/28/2005	PRS-17-02	2,4-Dinitrophenol	4.26E+02	1.80	1.8	U		1464103.619	597691.322
09/28/2005	PRS-17-02	2,4-Dinitrotoluene	4.26E+02	0.37	0.37	U		1464103.619	597691.322
09/28/2005	PRS-17-02	2,6-Dinitrotoluene	2.13E+02	0.37	0.37	U		1464103.619	597691.322
09/28/2005	PRS-17-02	2-Chloronaphthalene	1.70E+04	0.37	0.37	U		1464103.619	597691.322
09/28/2005	PRS-17-02	2-Chlorophenol	1.06E+03	0.37	0.37	U		1464103.619	597691.322
09/28/2005	PRS-17-02	2-Methylnaphthalene	8.52E+02	0.37	0.37	U		1464103.619	597691.322
09/28/2005	PRS-17-02	2-Methylphenol	1.06E+04	0.37	0.37	U		1464103.619	597691.322
09/28/2005	PRS-17-02	2-Nitroaniline	6.39E+01	1.80	1.8	U		1464103.619	597691.322
09/28/2005	PRS-17-02	2-Nitrophenol	NC	0.37	0.37	U		1464103.619	597691.322
09/28/2005	PRS-17-02	3,3'-Dichlorobenzidine	NC	1.80	1.8	U		1464103.619	597691.322
09/28/2005	PRS-17-02	3-Nitroaniline	6.39E+01	1.80	1.8	U		1464103.619	597691.322
09/28/2005	PRS-17-02	4,6-Dinitro-o-Cresol	NC	1.80	1.8	U		1464103.619	597691.322
09/28/2005	PRS-17-02	4-Bromophenyl-phenyl Ether	NC	0.37	0.37	U		1464103.619	597691.322
09/28/2005	PRS-17-02	4-Chloro-3-methylphenol	NC	0.37	0.37	U		1464103.619	597691.322
09/28/2005	PRS-17-02	4-Chloroaniline	8.52E+02	0.37	0.37	U		1464103.619	597691.322
09/28/2005	PRS-17-02	4-Methylphenol	1.06E+03	0.74	0.74	U		1464103.619	597691.322
09/28/2005	PRS-17-02	4-Nitroaniline	6.39E+02	1.80	1.8	U		1464103.619	597691.322
09/28/2005	PRS-17-02	4-Nitrophenol	NC	1.80	1.8	U		1464103.619	597691.322
09/28/2005	PRS-17-02	Acenaphthene	1.28E+04	0.37	0.37	U		1464103.619	597691.322
09/28/2005	PRS-17-02	Acenaphthylene	1.28E+04	0.37	0.37	U		1464103.619	597691.322
09/28/2005	PRS-17-02	Aluminum	2.13E+05	5700.00	22.4	N		1464103.619	597691.322
09/28/2005	PRS-17-02	Anthracene	6.39E+04	0.09	0.37	J		1464103.619	597691.322
09/28/2005	PRS-17-02	Antimony	8.52E+01	1.10	1.1	UN		1464103.619	597691.322
09/28/2005	PRS-17-02	Arsenic	6.39E+01	6.00	1.1			1464103.619	597691.322
09/28/2005	PRS-17-02	Barium	1.49E+04	45.70	22.4			1464103.619	597691.322
09/28/2005	PRS-17-02	Benzo(a)anthracene	NC	0.33	0.37	J		1464103.619	597691.322
09/28/2005	PRS-17-02	Benzo(a)pyrene	4.08E+00	0.37	0.37			1464103.619	597691.322
09/28/2005	PRS-17-02	Benzo(b)fluoranthene	4.08E+01	0.34	0.37	J		1464103.619	597691.322
09/28/2005	PRS-17-02	Benzo(g,h,i)perylene	NC	0.25	0.37	J		1464103.619	597691.322
09/28/2005	PRS-17-02	Benzo(k)fluoranthene	4.08E+02	0.32	0.37	J		1464103.619	597691.322

Table 1: Offsite Verification Results (mg/kg)

[data acquired from MEIMS]

Date	Location	Analyte	CO	Result	DL	Lab Qual	Data Qual	X Coord	Y Coord
09/28/2005	PRS-17-02	Beryllium	4.21E+02	0.41	0.56	B		1464103.619	597691.322
09/28/2005	PRS-17-02	Bis(2-chloroethoxy)methane	NC	0.37	0.37	U		1464103.619	597691.322
09/28/2005	PRS-17-02	Bis(2-chloroethyl)ether	4.26E+03	0.37	0.37	U		1464103.619	597691.322
09/28/2005	PRS-17-02	Bis(2-ethylhexyl)phthalate	4.26E+03	0.37	0.37	U		1464103.619	597691.322
09/28/2005	PRS-17-02	Butyl Benzyl Phthalate	4.26E+04	0.37	0.37	U		1464103.619	597691.322
09/28/2005	PRS-17-02	Cadmium	2.13E+02	0.56	0.56	U		1464103.619	597691.322
09/28/2005	PRS-17-02	Calcium	NC	106000.00	5590	N		1464103.619	597691.322
09/28/2005	PRS-17-02	Carbazole	NC	0.37	0.37	U		1464103.619	597691.322
09/28/2005	PRS-17-02	Chromium	3.19E+05	11.30	1.1	NE		1464103.619	597691.322
09/28/2005	PRS-17-02	Chrysene	NC	0.39	0.37			1464103.619	597691.322
09/28/2005	PRS-17-02	Cobalt	1.28E+04	5.00	5.6	B		1464103.619	597691.322
09/28/2005	PRS-17-02	Copper	8.52E+03	30.80	2.8	N		1464103.619	597691.322
09/28/2005	PRS-17-02	Dibenz(a,h)anthracene	4.08E+00	0.37	0.37	U		1464103.619	597691.322
09/28/2005	PRS-17-02	Dibenzofuran	8.52E+02	0.37	0.37	U		1464103.619	597691.322
09/28/2005	PRS-17-02	Diethyl Phthalate	1.70E+05	0.37	0.37	U		1464103.619	597691.322
09/28/2005	PRS-17-02	Dimethyl Phthalate	NC	0.37	0.37	U		1464103.619	597691.322
09/28/2005	PRS-17-02	Di-n-butyl Phthalate	2.13E+04	0.37	0.37	U		1464103.619	597691.322
09/28/2005	PRS-17-02	Di-n-octyl Phthalate	4.26E+03	0.37	0.37	U		1464103.619	597691.322
09/28/2005	PRS-17-02	Fluoranthene	8.52E+03	0.76	0.37			1464103.619	597691.322
09/28/2005	PRS-17-02	Fluorene	8.52E+03	0.37	0.37	U		1464103.619	597691.322
09/28/2005	PRS-17-02	Hexachlorobenzene	1.70E+02	0.37	0.37	U		1464103.619	597691.322
09/28/2005	PRS-17-02	Hexachlorobutadiene	1.27E+03	0.37	0.37	U		1464103.619	597691.322
09/28/2005	PRS-17-02	Hexachlorocyclopentadiene	1.27E+03	1.80	1.8	U		1464103.619	597691.322
09/28/2005	PRS-17-02	Hexachloroethane	2.13E+02	0.37	0.37	U		1464103.619	597691.322
09/28/2005	PRS-17-02	Indeno(1,2,3-cd)pyrene	4.08E+01	0.25	0.37	J		1464103.619	597691.322
09/28/2005	PRS-17-02	Iron	NC	12500.00	11.2	N		1464103.619	597691.322
09/28/2005	PRS-17-02	Isophorone	4.26E+04	0.37	0.37	U		1464103.619	597691.322
09/28/2005	PRS-17-02	Lead	448	15.10	0.34	N		1464103.619	597691.322
09/28/2005	PRS-17-02	Magnesium	NC	38500.00	5590	NE		1464103.619	597691.322
09/28/2005	PRS-17-02	Manganese	2.28E+04	383.00	1.7	E		1464103.619	597691.322
09/28/2005	PRS-17-02	Mercury	1.69E+01	0.60	0.037	N		1464103.619	597691.322
09/28/2005	PRS-17-02	Molybdenum	1.06E+03	1.60	4.5	B		1464103.619	597691.322
09/28/2005	PRS-17-02	Naphthalene	4.26E+03	0.37	0.37	U		1464103.619	597691.322
09/28/2005	PRS-17-02	Nickel	4.26E+03	11.50	4.5			1464103.619	597691.322
09/28/2005	PRS-17-02	Nitrobenzene	1.06E+02	0.37	0.37	U		1464103.619	597691.322
09/28/2005	PRS-17-02	N-Nitroso-di-n-propylamine	NC	0.37	0.37	U		1464103.619	597691.322
09/28/2005	PRS-17-02	N-Nitrosodiphenylamine	NC	0.37	0.37	U		1464103.619	597691.322
09/28/2005	PRS-17-02	Pentachlorophenol	6.39E+03	1.80	1.8	U		1464103.619	597691.322
09/28/2005	PRS-17-02	Phenanthrene	NC	0.41	0.37			1464103.619	597691.322
09/28/2005	PRS-17-02	Phenol	1.28E+05	0.37	0.37	U		1464103.619	597691.322
09/28/2005	PRS-17-02	Potassium	NC	1190.00	559			1464103.619	597691.322
09/28/2005	PRS-17-02	Pyrene	6.39E+03	0.56	0.37			1464103.619	597691.322
09/28/2005	PRS-17-02	Selenium	1.06E+03	0.56	0.56	U		1464103.619	597691.322
09/28/2005	PRS-17-02	Silver	1.06E+03	0.48	1.1	BN		1464103.619	597691.322
09/28/2005	PRS-17-02	Sodium	NC	135.00	559	B		1464103.619	597691.322
09/28/2005	PRS-17-02	Thallium	1.70E+01	1.10	1.1	U		1464103.619	597691.322
09/28/2005	PRS-17-02	Vanadium	1.49E+03	13.00	2.2			1464103.619	597691.322
09/28/2005	PRS-17-02	Zinc	6.39E+04	93.10	2.2	N		1464103.619	597691.322
09/28/2005	PRS-17-02F	1,2,4-Trichlorobenzene	2.13E+03	0.37	0.37	U		1464103.619	597691.322
09/28/2005	PRS-17-02F	1,2-Dichlorobenzene	1.92E+04	0.37	0.37	U		1464103.619	597691.322
09/28/2005	PRS-17-02F	1,3-Dichlorobenzene	6.38E+03	0.37	0.37	U		1464103.619	597691.322
09/28/2005	PRS-17-02F	1,4-Dichlorobenzene	1.54E+09	0.37	0.37	U		1464103.619	597691.322
09/28/2005	PRS-17-02F	1-chloro-4-phenoxybenzene	NC	0.37	0.37	U		1464103.619	597691.322
09/28/2005	PRS-17-02F	2,2'-oxybis(1-chloropropane)	8.52E+03	0.37	0.37	U		1464103.619	597691.322
09/28/2005	PRS-17-02F	2,4,5-Trichlorophenol	2.13E+04	0.37	0.37	U		1464103.619	597691.322
09/28/2005	PRS-17-02F	2,4,6-Trichlorophenol	NC	0.37	0.37	U		1464103.619	597691.322
09/28/2005	PRS-17-02F	2,4-Dichlorophenol	6.39E+02	0.37	0.37	U		1464103.619	597691.322
09/28/2005	PRS-17-02F	2,4-Dimethylphenol	4.26E+03	0.37	0.37	U		1464103.619	597691.322
09/28/2005	PRS-17-02F	2,4-Dinitrophenol	4.26E+02	1.80	1.8	U		1464103.619	597691.322
09/28/2005	PRS-17-02F	2,4-Dinitrotoluene	4.26E+02	0.37	0.37	U		1464103.619	597691.322
09/28/2005	PRS-17-02F	2,6-Dinitrotoluene	2.13E+02	0.37	0.37	U		1464103.619	597691.322
09/28/2005	PRS-17-02F	2-Chloronaphthalene	1.70E+04	0.37	0.37	U		1464103.619	597691.322
09/28/2005	PRS-17-02F	2-Chlorophenol	1.06E+03	0.37	0.37	U		1464103.619	597691.322
09/28/2005	PRS-17-02F	2-Methylnaphthalene	8.52E+02	0.37	0.37	U		1464103.619	597691.322

Table 1: Offsite Verification Results (mg/kg)

[data acquired from MEIMS]

Date	Location	Analyte	CO	Result	DL	Lab Qual	Data Qual	X Coord	Y Coord
09/28/2005	PRS-17-02F	2-Methylphenol	1.06E+04	0.37	0.37	U		1464103.619	597691.322
09/28/2005	PRS-17-02F	2-Nitroaniline	6.39E+01	1.80	1.8	U		1464103.619	597691.322
09/28/2005	PRS-17-02F	2-Nitrophenol	NC	0.37	0.37	U		1464103.619	597691.322
09/28/2005	PRS-17-02F	3,3'-Dichlorobenzidine	NC	1.80	1.8	U		1464103.619	597691.322
09/28/2005	PRS-17-02F	3-Nitroaniline	6.39E+01	1.80	1.8	U		1464103.619	597691.322
09/28/2005	PRS-17-02F	4,6-Dinitro-o-Cresol	NC	1.80	1.8	U		1464103.619	597691.322
09/28/2005	PRS-17-02F	4-Bromophenyl-phenyl Ether	NC	0.37	0.37	U		1464103.619	597691.322
09/28/2005	PRS-17-02F	4-Chloro-3-methylphenol	NC	0.37	0.37	U		1464103.619	597691.322
09/28/2005	PRS-17-02F	4-Chloroaniline	8.52E+02	0.37	0.37	U		1464103.619	597691.322
09/28/2005	PRS-17-02F	4-Methylphenol	1.06E+03	0.75	0.75	U		1464103.619	597691.322
09/28/2005	PRS-17-02F	4-Nitroaniline	6.39E+02	1.80	1.8	U		1464103.619	597691.322
09/28/2005	PRS-17-02F	4-Nitrophenol	NC	1.80	1.8	U		1464103.619	597691.322
09/28/2005	PRS-17-02F	Acenaphthene	1.28E+04	0.37	0.37	U		1464103.619	597691.322
09/28/2005	PRS-17-02F	Acenaphthylene	1.28E+04	0.37	0.37	U		1464103.619	597691.322
09/28/2005	PRS-17-02F	Aluminum	2.13E+05	5020.00	22.6	N		1464103.619	597691.322
09/28/2005	PRS-17-02F	Anthracene	6.39E+04	0.11	0.37	J		1464103.619	597691.322
09/28/2005	PRS-17-02F	Antimony	8.52E+01	1.10	1.1	UN		1464103.619	597691.322
09/28/2005	PRS-17-02F	Arsenic	6.39E+01	5.40	1.1			1464103.619	597691.322
09/28/2005	PRS-17-02F	Barium	1.49E+04	36.20	22.6			1464103.619	597691.322
09/28/2005	PRS-17-02F	Benzo(a)anthracene	NC	0.34	0.37	J		1464103.619	597691.322
09/28/2005	PRS-17-02F	Benzo(a)pyrene	4.08E+00	0.35	0.37	J		1464103.619	597691.322
09/28/2005	PRS-17-02F	Benzo(b)fluoranthene	4.08E+01	0.30	0.37	J		1464103.619	597691.322
09/28/2005	PRS-17-02F	Benzo(g,h,i)perylene	NC	0.22	0.37	J		1464103.619	597691.322
09/28/2005	PRS-17-02F	Benzo(k)fluoranthene	4.08E+02	0.31	0.37	J		1464103.619	597691.322
09/28/2005	PRS-17-02F	Beryllium	4.21E+02	0.37	0.57	B		1464103.619	597691.322
09/28/2005	PRS-17-02F	Bis(2-chloroethoxy)methane	NC	0.37	0.37	U		1464103.619	597691.322
09/28/2005	PRS-17-02F	Bis(2-ethylhexyl)phthalate	4.26E+03	0.37	0.37	U		1464103.619	597691.322
09/28/2005	PRS-17-02F	Butyl Benzyl Phthalate	4.26E+04	0.37	0.37	U		1464103.619	597691.322
09/28/2005	PRS-17-02F	Cadmium	2.13E+02	0.57	0.57	U		1464103.619	597691.322
09/28/2005	PRS-17-02F	Calcium	NC	132000.00	5650	N		1464103.619	597691.322
09/28/2005	PRS-17-02F	Carbazole	NC	0.37	0.37	U		1464103.619	597691.322
09/28/2005	PRS-17-02F	Chromium	3.19E+05	10.30	1.1	NE		1464103.619	597691.322
09/28/2005	PRS-17-02F	Cobalt	1.28E+04	3.70	5.7	B		1464103.619	597691.322
09/28/2005	PRS-17-02F	Copper	8.52E+03	24.70	2.8	N		1464103.619	597691.322
09/28/2005	PRS-17-02F	Dibenz(a,h)anthracene	4.08E+00	0.37	0.37	U		1464103.619	597691.322
09/28/2005	PRS-17-02F	Dibenzofuran	8.52E+02	0.37	0.37	U		1464103.619	597691.322
09/28/2005	PRS-17-02F	Diethyl Phthalate	1.70E+05	0.37	0.37	U		1464103.619	597691.322
09/28/2005	PRS-17-02F	Dimethyl Phthalate	NC	0.37	0.37	U		1464103.619	597691.322
09/28/2005	PRS-17-02F	Di-n-butyl Phthalate	2.13E+04	0.37	0.37	U		1464103.619	597691.322
09/28/2005	PRS-17-02F	Di-n-octyl Phthalate	4.26E+03	0.37	0.37	U		1464103.619	597691.322
09/28/2005	PRS-17-02F	Fluoranthene	8.52E+03	0.78	0.37			1464103.619	597691.322
09/28/2005	PRS-17-02F	Fluorene	8.52E+03	0.37	0.37	U		1464103.619	597691.322
09/28/2005	PRS-17-02F	Hexachlorobenzene	1.70E+02	0.37	0.37	U		1464103.619	597691.322
09/28/2005	PRS-17-02F	Hexachlorobutadiene	1.27E+03	0.37	0.37	U		1464103.619	597691.322
09/28/2005	PRS-17-02F	Hexachlorocyclopentadiene	1.27E+03	1.80	1.8	U		1464103.619	597691.322
09/28/2005	PRS-17-02F	Hexachloroethane	2.13E+02	0.37	0.37	U		1464103.619	597691.322
09/28/2005	PRS-17-02F	Indeno(1,2,3-cd)pyrene	4.08E+01	0.23	0.37	J		1464103.619	597691.322
09/28/2005	PRS-17-02F	Iron	NC	9950.00	11.3	N		1464103.619	597691.322
09/28/2005	PRS-17-02F	Isophorone	4.26E+04	0.37	0.37	U		1464103.619	597691.322
09/28/2005	PRS-17-02F	Lead	448	11.10	0.34	N		1464103.619	597691.322
09/28/2005	PRS-17-02F	Magnesium	NC	59400.00	5650	NE		1464103.619	597691.322
09/28/2005	PRS-17-02F	Manganese	2.28E+04	301.00	1.7	E		1464103.619	597691.322
09/28/2005	PRS-17-02F	Mercury	1.69E+01	0.54	0.038	N		1464103.619	597691.322
09/28/2005	PRS-17-02F	Molybdenum	1.06E+03	1.10	4.5	B		1464103.619	597691.322
09/28/2005	PRS-17-02F	Naphthalene	4.26E+03	0.37	0.37	U		1464103.619	597691.322
09/28/2005	PRS-17-02F	Nickel	4.26E+03	9.10	4.5			1464103.619	597691.322
09/28/2005	PRS-17-02F	Nitrobenzene	1.06E+02	0.37	0.37	U		1464103.619	597691.322
09/28/2005	PRS-17-02F	N-Nitroso-di-n-propylamine	NC	0.37	0.37	U		1464103.619	597691.322
09/28/2005	PRS-17-02F	N-Nitrosodiphenylamine	NC	0.37	0.37	U		1464103.619	597691.322
09/28/2005	PRS-17-02F	Pentachlorophenol	6.39E+03	1.80	1.8	U		1464103.619	597691.322
09/28/2005	PRS-17-02F	Phenanthrene	NC	0.46	0.37			1464103.619	597691.322
09/28/2005	PRS-17-02F	Phenol	1.28E+05	0.37	0.37	U		1464103.619	597691.322
09/28/2005	PRS-17-02F	Potassium	NC	1140.00	565			1464103.619	597691.322
09/28/2005	PRS-17-02F	Pyrene	6.39E+03	0.57	0.37			1464103.619	597691.322

Table 1: Offsite Verification Results (mg/kg)

[data acquired from MEIMS]

Date	Location	Analyte	CO	Result	DL	Lab Qual	Data Qual	X Coord	Y Coord
09/28/2005	PRS-17-02F	Selenium	1.06E+03	0.57	0.57	U		1464103.619	597691.322
09/28/2005	PRS-17-02F	Silver	1.06E+03	0.30	1.1	BN		1464103.619	597691.322
09/28/2005	PRS-17-02F	Sodium	NC	167.00	565	B		1464103.619	597691.322
09/28/2005	PRS-17-02F	Thallium	1.70E+01	1.10	1.1	U		1464103.619	597691.322
09/28/2005	PRS-17-02F	Vanadium	1.49E+03	11.60	2.3			1464103.619	597691.322
09/28/2005	PRS-17-02F	Zinc	6.39E+04	70.80	2.3	N		1464103.619	597691.322
09/28/2005	PRS-17-03	1,2,4-Trichlorobenzene	2.13E+03	0.34	0.34	U		1464115.259	597691.322
09/28/2005	PRS-17-03	1,2-Dichlorobenzene	1.92E+04	0.34	0.34	U		1464115.259	597691.322
09/28/2005	PRS-17-03	1,3-Dichlorobenzene	6.38E+03	0.34	0.34	U		1464115.259	597691.322
09/28/2005	PRS-17-03	1,4-Dichlorobenzene	1.54E+09	0.34	0.34	U		1464115.259	597691.322
09/28/2005	PRS-17-03	1-chloro-4-phenoxybenzene	NC	0.34	0.34	U		1464115.259	597691.322
09/28/2005	PRS-17-03	2,2'-oxybis(1-chloropropane)	8.52E+03	0.34	0.34	U		1464115.259	597691.322
09/28/2005	PRS-17-03	2,4,5-Trichlorophenol	2.13E+04	0.34	0.34	U		1464115.259	597691.322
09/28/2005	PRS-17-03	2,4,6-Trichlorophenol	NC	0.34	0.34	U		1464115.259	597691.322
09/28/2005	PRS-17-03	2,4-Dichlorophenol	6.39E+02	0.34	0.34	U		1464115.259	597691.322
09/28/2005	PRS-17-03	2,4-Dimethylphenol	4.26E+03	0.34	0.34	U		1464115.259	597691.322
09/28/2005	PRS-17-03	2,4-Dinitrophenol	4.26E+02	1.70	1.7	U		1464115.259	597691.322
09/28/2005	PRS-17-03	2,4-Dinitrotoluene	4.26E+02	0.34	0.34	U		1464115.259	597691.322
09/28/2005	PRS-17-03	2,6-Dinitrotoluene	2.13E+02	0.34	0.34	U		1464115.259	597691.322
09/28/2005	PRS-17-03	2-Chloronaphthalene	1.70E+04	0.34	0.34	U		1464115.259	597691.322
09/28/2005	PRS-17-03	2-Chlorophenol	1.06E+03	0.34	0.34	U		1464115.259	597691.322
09/28/2005	PRS-17-03	2-Methylnaphthalene	8.52E+02	0.34	0.34	U		1464115.259	597691.322
09/28/2005	PRS-17-03	2-Methylphenol	1.06E+04	0.34	0.34	U		1464115.259	597691.322
09/28/2005	PRS-17-03	2-Nitroaniline	6.39E+01	1.70	1.7	U		1464115.259	597691.322
09/28/2005	PRS-17-03	2-Nitrophenol	NC	0.34	0.34	U		1464115.259	597691.322
09/28/2005	PRS-17-03	3,3'-Dichlorobenzidine	NC	1.70	1.7	U		1464115.259	597691.322
09/28/2005	PRS-17-03	3-Nitroaniline	6.39E+01	1.70	1.7	U		1464115.259	597691.322
09/28/2005	PRS-17-03	4,6-Dinitro-o-Cresol	NC	1.70	1.7	U		1464115.259	597691.322
09/28/2005	PRS-17-03	4-Bromophenyl-phenyl Ether	NC	0.34	0.34	U		1464115.259	597691.322
09/28/2005	PRS-17-03	4-Chloro-3-methylphenol	NC	0.34	0.34	U		1464115.259	597691.322
09/28/2005	PRS-17-03	4-Chloroaniline	8.52E+02	0.34	0.34	U		1464115.259	597691.322
09/28/2005	PRS-17-03	4-Methylphenol	1.06E+03	0.69	0.69	U		1464115.259	597691.322
09/28/2005	PRS-17-03	4-Nitroaniline	6.39E+02	1.70	1.7	U		1464115.259	597691.322
09/28/2005	PRS-17-03	4-Nitrophenol	NC	1.70	1.7	U		1464115.259	597691.322
09/28/2005	PRS-17-03	Acenaphthene	1.28E+04	0.59	0.34			1464115.259	597691.322
09/28/2005	PRS-17-03	Acenaphthylene	1.28E+04	0.34	0.34	U		1464115.259	597691.322
09/28/2005	PRS-17-03	Aluminum	2.13E+05	3990.00	20.8	N		1464115.259	597691.322
09/28/2005	PRS-17-03	Anthracene	6.39E+04	0.84	0.34			1464115.259	597691.322
09/28/2005	PRS-17-03	Antimony	8.52E+01	1.00	1	UN		1464115.259	597691.322
09/28/2005	PRS-17-03	Arsenic	6.39E+01	4.30	1			1464115.259	597691.322
09/28/2005	PRS-17-03	Barium	1.49E+04	34.60	20.8			1464115.259	597691.322
09/28/2005	PRS-17-03	Benzo(a)anthracene	NC	2.10	0.34			1464115.259	597691.322
09/28/2005	PRS-17-03	Benzo(a)pyrene	4.08E+00	2.10	0.34			1464115.259	597691.322
09/28/2005	PRS-17-03	Benzo(b)fluoranthene	4.08E+01	1.90	0.34			1464115.259	597691.322
09/28/2005	PRS-17-03	Benzo(g,h,i)perylene	NC	1.30	0.34			1464115.259	597691.322
09/28/2005	PRS-17-03	Benzo(k)fluoranthene	4.08E+02	1.80	0.34			1464115.259	597691.322
09/28/2005	PRS-17-03	Beryllium	4.21E+02	0.32	0.52	B		1464115.259	597691.322
09/28/2005	PRS-17-03	Bis(2-chloroethoxy)methane	NC	0.34	0.34	U		1464115.259	597691.322
09/28/2005	PRS-17-03	Bis(2-chloroethyl)ether	4.26E+03	0.34	0.34	U		1464115.259	597691.322
09/28/2005	PRS-17-03	Bis(2-ethylhexyl)phthalate	4.26E+03	0.34	0.34	U		1464115.259	597691.322
09/28/2005	PRS-17-03	Butyl Benzyl Phthalate	4.26E+04	0.34	0.34	U		1464115.259	597691.322
09/28/2005	PRS-17-03	Cadmium	2.13E+02	0.52	0.52	U		1464115.259	597691.322
09/28/2005	PRS-17-03	Calcium	NC	142000.00	5210	N		1464115.259	597691.322
09/28/2005	PRS-17-03	Carbazole	NC	0.57	0.34			1464115.259	597691.322
09/28/2005	PRS-17-03	Chromium	3.19E+05	7.10	1	NE		1464115.259	597691.322
09/28/2005	PRS-17-03	Chrysene	NC	2.40	0.34			1464115.259	597691.322
09/28/2005	PRS-17-03	Cobalt	1.28E+04	3.60	5.2	B		1464115.259	597691.322
09/28/2005	PRS-17-03	Copper	8.52E+03	46.30	2.6	N		1464115.259	597691.322
09/28/2005	PRS-17-03	Dibenz(a,h)anthracene	4.08E+00	0.48	0.34			1464115.259	597691.322
09/28/2005	PRS-17-03	Dibenzofuran	8.52E+02	0.28	0.34	J		1464115.259	597691.322
09/28/2005	PRS-17-03	Diethyl Phthalate	1.70E+05	0.34	0.34	U		1464115.259	597691.322
09/28/2005	PRS-17-03	Dimethyl Phthalate	NC	0.34	0.34	U		1464115.259	597691.322
09/28/2005	PRS-17-03	Di-n-butyl Phthalate	2.13E+04	0.34	0.34	U		1464115.259	597691.322
09/28/2005	PRS-17-03	Di-n-octyl Phthalate	4.26E+03	0.34	0.34	U		1464115.259	597691.322

Table 1: Offsite Verification Results (mg/kg)

[data acquired from MEIMS]

Date	Location	Analyte	CO	Result	DL	Lab Qual	Data Qual	X Coord	Y Coord
09/28/2005	PRS-17-03	Fluoranthene	8.52E+03	5.40	0.34			1464115.259	597691.322
09/28/2005	PRS-17-03	Fluorene	8.52E+03	0.48	0.34			1464115.259	597691.322
09/28/2005	PRS-17-03	Hexachlorobenzene	1.70E+02	0.34	0.34	U		1464115.259	597691.322
09/28/2005	PRS-17-03	Hexachlorobutadiene	1.27E+03	0.34	0.34	U		1464115.259	597691.322
09/28/2005	PRS-17-03	Hexachlorocyclopentadiene	1.27E+03	1.70	1.7	U		1464115.259	597691.322
09/28/2005	PRS-17-03	Hexachloroethane	2.13E+02	0.34	0.34	U		1464115.259	597691.322
09/28/2005	PRS-17-03	Indeno(1,2,3-cd)pyrene	4.08E+01	1.40	0.34			1464115.259	597691.322
09/28/2005	PRS-17-03	Iron	NC	9990.00	10.4	N		1464115.259	597691.322
09/28/2005	PRS-17-03	Isophorone	4.26E+04	0.34	0.34	U		1464115.259	597691.322
09/28/2005	PRS-17-03	Lead	448	11.00	0.31	N		1464115.259	597691.322
09/28/2005	PRS-17-03	Magnesium	NC	43200.00	5210	NE		1464115.259	597691.322
09/28/2005	PRS-17-03	Manganese	2.28E+04	357.00	1.6	E		1464115.259	597691.322
09/28/2005	PRS-17-03	Mercury	1.69E+01	0.14	0.035	N		1464115.259	597691.322
09/28/2005	PRS-17-03	Molybdenum	1.06E+03	2.40	4.2	B		1464115.259	597691.322
09/28/2005	PRS-17-03	Naphthalene	4.26E+03	0.15	0.34	J		1464115.259	597691.322
09/28/2005	PRS-17-03	Nickel	4.26E+03	11.70	4.2			1464115.259	597691.322
09/28/2005	PRS-17-03	Nitrobenzene	1.06E+02	0.34	0.34	U		1464115.259	597691.322
09/28/2005	PRS-17-03	N-Nitroso-di-n-propylamine	NC	0.34	0.34	U		1464115.259	597691.322
09/28/2005	PRS-17-03	N-Nitrosodiphenylamine	NC	0.34	0.34	U		1464115.259	597691.322
09/28/2005	PRS-17-03	Pentachlorophenol	6.39E+03	1.70	1.7	U		1464115.259	597691.322
09/28/2005	PRS-17-03	Phenanthrene	NC	4.20	0.34			1464115.259	597691.322
09/28/2005	PRS-17-03	Phenol	1.28E+05	0.34	0.34	U		1464115.259	597691.322
09/28/2005	PRS-17-03	Potassium	NC	874.00	521			1464115.259	597691.322
09/28/2005	PRS-17-03	Pyrene	6.39E+03	4.00	0.34			1464115.259	597691.322
09/28/2005	PRS-17-03	Selenium	1.06E+03	0.52	0.52	U		1464115.259	597691.322
09/28/2005	PRS-17-03	Silver	1.06E+03	0.50	1	BN		1464115.259	597691.322
09/28/2005	PRS-17-03	Sodium	NC	150.00	521	B		1464115.259	597691.322
09/28/2005	PRS-17-03	Thallium	1.70E+01	1.00	1	U		1464115.259	597691.322
09/28/2005	PRS-17-03	Vanadium	1.49E+03	9.60	2.1			1464115.259	597691.322
09/28/2005	PRS-17-03	Zinc	6.39E+04	92.60	2.1	N		1464115.259	597691.322
09/28/2005	PRS-17-04	1,2,4-Trichlorobenzene	2.13E+03	0.37	0.37	U		1464126.900	597691.322
09/28/2005	PRS-17-04	1,2-Dichlorobenzene	1.92E+04	0.37	0.37	U		1464126.900	597691.322
09/28/2005	PRS-17-04	1,3-Dichlorobenzene	6.38E+03	0.37	0.37	U		1464126.900	597691.322
09/28/2005	PRS-17-04	1,4-Dichlorobenzene	1.54E+09	0.37	0.37	U		1464126.900	597691.322
09/28/2005	PRS-17-04	1-chloro-4-phenoxybenzene	NC	0.37	0.37	U		1464126.900	597691.322
09/28/2005	PRS-17-04	2,2'-oxybis(1-chloropropane)	8.52E+03	0.37	0.37	U		1464126.900	597691.322
09/28/2005	PRS-17-04	2,4,5-Trichlorophenol	2.13E+04	0.37	0.37	U		1464126.900	597691.322
09/28/2005	PRS-17-04	2,4,6-Trichlorophenol	NC	0.37	0.37	U		1464126.900	597691.322
09/28/2005	PRS-17-04	2,4-Dichlorophenol	6.39E+02	0.37	0.37	U		1464126.900	597691.322
09/28/2005	PRS-17-04	2,4-Dimethylphenol	4.26E+03	0.37	0.37	U		1464126.900	597691.322
09/28/2005	PRS-17-04	2,4-Dinitrophenol	4.26E+02	1.80	1.8	U		1464126.900	597691.322
09/28/2005	PRS-17-04	2,4-Dinitrotoluene	4.26E+02	0.37	0.37	U		1464126.900	597691.322
09/28/2005	PRS-17-04	2,6-Dinitrotoluene	2.13E+02	0.37	0.37	U		1464126.900	597691.322
09/28/2005	PRS-17-04	2-Chloronaphthalene	1.70E+04	0.37	0.37	U		1464126.900	597691.322
09/28/2005	PRS-17-04	2-Chlorophenol	1.06E+03	0.37	0.37	U		1464126.900	597691.322
09/28/2005	PRS-17-04	2-Methylnaphthalene	8.52E+02	0.37	0.37	U		1464126.900	597691.322
09/28/2005	PRS-17-04	2-Methylphenol	1.06E+04	0.37	0.37	U		1464126.900	597691.322
09/28/2005	PRS-17-04	2-Nitroaniline	6.39E+01	1.80	1.8	U		1464126.900	597691.322
09/28/2005	PRS-17-04	2-Nitrophenol	NC	0.37	0.37	U		1464126.900	597691.322
09/28/2005	PRS-17-04	3,3'-Dichlorobenzidine	NC	1.80	1.8	U		1464126.900	597691.322
09/28/2005	PRS-17-04	3-Nitroaniline	6.39E+01	1.80	1.8	U		1464126.900	597691.322
09/28/2005	PRS-17-04	4,6-Dinitro-o-Cresol	NC	1.80	1.8	U		1464126.900	597691.322
09/28/2005	PRS-17-04	4-Bromophenyl-phenyl Ether	NC	0.37	0.37	U		1464126.900	597691.322
09/28/2005	PRS-17-04	4-Chloro-3-methylphenol	NC	0.37	0.37	U		1464126.900	597691.322
09/28/2005	PRS-17-04	4-Chloroaniline	8.52E+02	0.37	0.37	U		1464126.900	597691.322
09/28/2005	PRS-17-04	4-Methylphenol	1.06E+03	0.74	0.74	U		1464126.900	597691.322
09/28/2005	PRS-17-04	4-Nitroaniline	6.39E+02	1.80	1.8	U		1464126.900	597691.322
09/28/2005	PRS-17-04	4-Nitrophenol	NC	1.80	1.8	U		1464126.900	597691.322
09/28/2005	PRS-17-04	Acenaphthene	1.28E+04	0.37	0.37	U		1464126.900	597691.322
09/28/2005	PRS-17-04	Acenaphthylene	1.28E+04	0.37	0.37	U		1464126.900	597691.322
09/28/2005	PRS-17-04	Aluminum	2.13E+05	5680.00	22.4	N		1464126.900	597691.322
09/28/2005	PRS-17-04	Anthracene	6.39E+04	0.37	0.37	U		1464126.900	597691.322
09/28/2005	PRS-17-04	Antimony	8.52E+01	1.10	1.1	UN		1464126.900	597691.322
09/28/2005	PRS-17-04	Arsenic	6.39E+01	6.40	1.1			1464126.900	597691.322

Table 1: Offsite Verification Results (mg/kg)

[data acquired from MEIMS]

Date	Location	Analyte	CO	Result	DL	Lab Qual	Data Qual	X Coord	Y Coord
09/28/2005	PRS-17-04	Barium	1.49E+04	44.80	22.4			1464126.900	597691.322
09/28/2005	PRS-17-04	Benzo(a)anthracene	NC	0.18	0.37	J		1464126.900	597691.322
09/28/2005	PRS-17-04	Benzo(a)pyrene	4.08E+00	0.21	0.37	J		1464126.900	597691.322
09/28/2005	PRS-17-04	Benzo(b)fluoranthene	4.08E+01	0.20	0.37	J		1464126.900	597691.322
09/28/2005	PRS-17-04	Benzo(g,h,i)perylene	NC	0.14	0.37	J		1464126.900	597691.322
09/28/2005	PRS-17-04	Benzo(k)fluoranthene	4.08E+02	0.20	0.37	J		1464126.900	597691.322
09/28/2005	PRS-17-04	Beryllium	4.21E+02	0.42	0.56	B		1464126.900	597691.322
09/28/2005	PRS-17-04	Bis(2-chloroethoxy)methane	NC	0.37	0.37	U		1464126.900	597691.322
09/28/2005	PRS-17-04	Bis(2-chloroethyl)ether	4.26E+03	0.37	0.37	U		1464126.900	597691.322
09/28/2005	PRS-17-04	Bis(2-ethylhexyl)phthalate	4.26E+03	0.37	0.37	U		1464126.900	597691.322
09/28/2005	PRS-17-04	Butyl Benzyl Phthalate	4.26E+04	0.37	0.37	U		1464126.900	597691.322
09/28/2005	PRS-17-04	Cadmium	2.13E+02	0.56	0.56	U		1464126.900	597691.322
09/28/2005	PRS-17-04	Calcium	NC	99900.00	5600	N		1464126.900	597691.322
09/28/2005	PRS-17-04	Carbazole	NC	0.37	0.37	U		1464126.900	597691.322
09/28/2005	PRS-17-04	Chromium	3.19E+05	11.70	1.1	NE		1464126.900	597691.322
09/28/2005	PRS-17-04	Chrysene	NC	0.23	0.37	J		1464126.900	597691.322
09/28/2005	PRS-17-04	Cobalt	1.28E+04	5.00	5.6	B		1464126.900	597691.322
09/28/2005	PRS-17-04	Copper	8.52E+03	29.40	2.8	N		1464126.900	597691.322
09/28/2005	PRS-17-04	Dibenz(a,h)anthracene	4.08E+00	0.37	0.37	U		1464126.900	597691.322
09/28/2005	PRS-17-04	Dibenzofuran	8.52E+02	0.37	0.37	U		1464126.900	597691.322
09/28/2005	PRS-17-04	Diethyl Phthalate	1.70E+05	0.37	0.37	U		1464126.900	597691.322
09/28/2005	PRS-17-04	Dimethyl Phthalate	NC	0.37	0.37	U		1464126.900	597691.322
09/28/2005	PRS-17-04	Di-n-butyl Phthalate	2.13E+04	0.37	0.37	U		1464126.900	597691.322
09/28/2005	PRS-17-04	Di-n-octyl Phthalate	4.26E+03	0.37	0.37	U		1464126.900	597691.322
09/28/2005	PRS-17-04	Fluoranthene	8.52E+03	0.44	0.37			1464126.900	597691.322
09/28/2005	PRS-17-04	Fluorene	8.52E+03	0.37	0.37	U		1464126.900	597691.322
09/28/2005	PRS-17-04	Hexachlorobenzene	1.70E+02	0.37	0.37	U		1464126.900	597691.322
09/28/2005	PRS-17-04	Hexachlorobutadiene	1.27E+03	0.37	0.37	U		1464126.900	597691.322
09/28/2005	PRS-17-04	Hexachlorocyclopentadiene	1.27E+03	1.80	1.8	U		1464126.900	597691.322
09/28/2005	PRS-17-04	Hexachloroethane	2.13E+02	0.37	0.37	U		1464126.900	597691.322
09/28/2005	PRS-17-04	Indeno(1,2,3-cd)pyrene	4.08E+01	0.15	0.37	J		1464126.900	597691.322
09/28/2005	PRS-17-04	Iron	NC	12800.00	11.2	N		1464126.900	597691.322
09/28/2005	PRS-17-04	Isophorone	4.26E+04	0.37	0.37	U		1464126.900	597691.322
09/28/2005	PRS-17-04	Lead	448	12.40	0.34	N		1464126.900	597691.322
09/28/2005	PRS-17-04	Magnesium	NC	37000.00	5600	NE		1464126.900	597691.322
09/28/2005	PRS-17-04	Manganese	2.28E+04	343.00	1.7	E		1464126.900	597691.322
09/28/2005	PRS-17-04	Mercury	1.69E+01	0.20	0.037	N		1464126.900	597691.322
09/28/2005	PRS-17-04	Molybdenum	1.06E+03	1.90	4.5	B		1464126.900	597691.322
09/28/2005	PRS-17-04	Naphthalene	4.26E+03	0.37	0.37	U		1464126.900	597691.322
09/28/2005	PRS-17-04	Nickel	4.26E+03	11.10	4.5			1464126.900	597691.322
09/28/2005	PRS-17-04	Nitrobenzene	1.06E+02	0.37	0.37	U		1464126.900	597691.322
09/28/2005	PRS-17-04	N-Nitroso-di-n-propylamine	NC	0.37	0.37	U		1464126.900	597691.322
09/28/2005	PRS-17-04	N-Nitrosodiphenylamine	NC	0.37	0.37	U		1464126.900	597691.322
09/28/2005	PRS-17-04	Pentachlorophenol	6.39E+03	1.80	1.8	U		1464126.900	597691.322
09/28/2005	PRS-17-04	Phenanthrene	NC	0.27	0.37	J		1464126.900	597691.322
09/28/2005	PRS-17-04	Phenol	1.28E+05	0.37	0.37	U		1464126.900	597691.322
09/28/2005	PRS-17-04	Potassium	NC	1310.00	560			1464126.900	597691.322
09/28/2005	PRS-17-04	Pyrene	6.39E+03	0.32	0.37	J		1464126.900	597691.322
09/28/2005	PRS-17-04	Selenium	1.06E+03	0.56	0.56	U		1464126.900	597691.322
09/28/2005	PRS-17-04	Silver	1.06E+03	0.36	1.1	BN		1464126.900	597691.322
09/28/2005	PRS-17-04	Sodium	NC	114.00	560	B		1464126.900	597691.322
09/28/2005	PRS-17-04	Thallium	1.70E+01	0.70	1.1	B		1464126.900	597691.322
09/28/2005	PRS-17-04	Vanadium	1.49E+03	13.40	2.2			1464126.900	597691.322
09/28/2005	PRS-17-04	Zinc	6.39E+04	87.60	2.2	N		1464126.900	597691.322
09/28/2005	PRS-17-05	1,2,4-Trichlorobenzene	2.13E+03	0.35	0.35	U		1464109.439	597681.240
09/28/2005	PRS-17-05	1,2-Dichlorobenzene	1.92E+04	0.35	0.35	U		1464109.439	597681.240
09/28/2005	PRS-17-05	1,3-Dichlorobenzene	6.38E+03	0.35	0.35	U		1464109.439	597681.240
09/28/2005	PRS-17-05	1,4-Dichlorobenzene	1.54E+09	0.35	0.35	U		1464109.439	597681.240
09/28/2005	PRS-17-05	1-chloro-4-phenoxybenzene	NC	0.35	0.35	U		1464109.439	597681.240
09/28/2005	PRS-17-05	2,2'-oxybis(1-chloropropane)	8.52E+03	0.35	0.35	U		1464109.439	597681.240
09/28/2005	PRS-17-05	2,4,5-Trichlorophenol	2.13E+04	0.35	0.35	U		1464109.439	597681.240
09/28/2005	PRS-17-05	2,4,6-Trichlorophenol	NC	0.35	0.35	U		1464109.439	597681.240
09/28/2005	PRS-17-05	2,4-Dichlorophenol	6.39E+02	0.35	0.35	U		1464109.439	597681.240
09/28/2005	PRS-17-05	2,4-Dimethylphenol	4.26E+03	0.35	0.35	U		1464109.439	597681.240

Table 1: Offsite Verification Results (mg/kg)

[data acquired from MEIMS]

Date	Location	Analyte	CO	Result	DL	Lab Qual	Data Qual	X Coord	Y Coord
09/28/2005	PRS-17-05	2,4-Dinitrophenol	4.26E+02	1.70	1.7	U		1464109.439	597681.240
09/28/2005	PRS-17-05	2,4-Dinitrotoluene	4.26E+02	0.35	0.35	U		1464109.439	597681.240
09/28/2005	PRS-17-05	2,6-Dinitrotoluene	2.13E+02	0.35	0.35	U		1464109.439	597681.240
09/28/2005	PRS-17-05	2-Chloronaphthalene	1.70E+04	0.35	0.35	U		1464109.439	597681.240
09/28/2005	PRS-17-05	2-Chlorophenol	1.06E+03	0.35	0.35	U		1464109.439	597681.240
09/28/2005	PRS-17-05	2-Methylnaphthalene	8.52E+02	0.35	0.35	U		1464109.439	597681.240
09/28/2005	PRS-17-05	2-Methylphenol	1.06E+04	0.35	0.35	U		1464109.439	597681.240
09/28/2005	PRS-17-05	2-Nitroaniline	6.39E+01	1.70	1.7	U		1464109.439	597681.240
09/28/2005	PRS-17-05	2-Nitrophenol	NC	0.35	0.35	U		1464109.439	597681.240
09/28/2005	PRS-17-05	3,3'-Dichlorobenzidine	NC	1.70	1.7	U		1464109.439	597681.240
09/28/2005	PRS-17-05	3-Nitroaniline	6.39E+01	1.70	1.7	U		1464109.439	597681.240
09/28/2005	PRS-17-05	4,6-Dinitro-o-Cresol	NC	1.70	1.7	U		1464109.439	597681.240
09/28/2005	PRS-17-05	4-Bromophenyl-phenyl Ether	NC	0.35	0.35	U		1464109.439	597681.240
09/28/2005	PRS-17-05	4-Chloro-3-methylphenol	NC	0.35	0.35	U		1464109.439	597681.240
09/28/2005	PRS-17-05	4-Chloroaniline	8.52E+02	0.35	0.35	U		1464109.439	597681.240
09/28/2005	PRS-17-05	4-Methylphenol	1.06E+03	0.70	0.7	U		1464109.439	597681.240
09/28/2005	PRS-17-05	4-Nitroaniline	6.39E+02	1.70	1.7	U		1464109.439	597681.240
09/28/2005	PRS-17-05	4-Nitrophenol	NC	1.70	1.7	U		1464109.439	597681.240
09/28/2005	PRS-17-05	Acenaphthene	1.28E+04	0.10	0.35	J		1464109.439	597681.240
09/28/2005	PRS-17-05	Acenaphthylene	1.28E+04	0.35	0.35	U		1464109.439	597681.240
09/28/2005	PRS-17-05	Aluminum	2.13E+05	5040.00	21.2	N		1464109.439	597681.240
09/28/2005	PRS-17-05	Anthracene	6.39E+04	0.22	0.35	J		1464109.439	597681.240
09/28/2005	PRS-17-05	Antimony	8.52E+01	1.10	1.1	UN		1464109.439	597681.240
09/28/2005	PRS-17-05	Arsenic	6.39E+01	5.30	1.1			1464109.439	597681.240
09/28/2005	PRS-17-05	Barium	1.49E+04	42.10	21.2			1464109.439	597681.240
09/28/2005	PRS-17-05	Benzo(a)anthracene	NC	0.75	0.35			1464109.439	597681.240
09/28/2005	PRS-17-05	Benzo(a)pyrene	4.08E+00	0.80	0.35			1464109.439	597681.240
09/28/2005	PRS-17-05	Benzo(b)fluoranthene	4.08E+01	0.72	0.35			1464109.439	597681.240
09/28/2005	PRS-17-05	Benzo(g,h,i)perylene	NC	0.55	0.35			1464109.439	597681.240
09/28/2005	PRS-17-05	Benzo(k)fluoranthene	4.08E+02	0.73	0.35			1464109.439	597681.240
09/28/2005	PRS-17-05	Beryllium	4.21E+02	0.39	0.53	B		1464109.439	597681.240
09/28/2005	PRS-17-05	Bis(2-chloroethoxy)methane	NC	0.35	0.35	U		1464109.439	597681.240
09/28/2005	PRS-17-05	Bis(2-chloroethyl)ether	4.26E+03	0.35	0.35	U		1464109.439	597681.240
09/28/2005	PRS-17-05	Bis(2-ethylhexyl)phthalate	4.26E+03	0.35	0.35	U		1464109.439	597681.240
09/28/2005	PRS-17-05	Butyl Benzyl Phthalate	4.26E+04	0.35	0.35	U		1464109.439	597681.240
09/28/2005	PRS-17-05	Cadmium	2.13E+02	0.53	0.53	U		1464109.439	597681.240
09/28/2005	PRS-17-05	Calcium	NC	118000.00	5310	N		1464109.439	597681.240
09/28/2005	PRS-17-05	Carbazole	NC	0.15	0.35	J		1464109.439	597681.240
09/28/2005	PRS-17-05	Chromium	3.19E+05	11.30	1.1	NE		1464109.439	597681.240
09/28/2005	PRS-17-05	Chrysene	NC	0.88	0.35			1464109.439	597681.240
09/28/2005	PRS-17-05	Cobalt	1.28E+04	4.40	5.3	B		1464109.439	597681.240
09/28/2005	PRS-17-05	Copper	8.52E+03	47.70	2.7	N		1464109.439	597681.240
09/28/2005	PRS-17-05	Dibenz(a,h)anthracene	4.08E+00	0.16	0.35	J		1464109.439	597681.240
09/28/2005	PRS-17-05	Dibenzofuran	8.52E+02	0.35	0.35	U		1464109.439	597681.240
09/28/2005	PRS-17-05	Diethyl Phthalate	1.70E+05	0.35	0.35	U		1464109.439	597681.240
09/28/2005	PRS-17-05	Dimethyl Phthalate	NC	0.35	0.35	U		1464109.439	597681.240
09/28/2005	PRS-17-05	Di-n-butyl Phthalate	2.13E+04	0.35	0.35	U		1464109.439	597681.240
09/28/2005	PRS-17-05	Di-n-octyl Phthalate	4.26E+03	0.35	0.35	U		1464109.439	597681.240
09/28/2005	PRS-17-05	Fluoranthene	8.52E+03	1.90	0.35			1464109.439	597681.240
09/28/2005	PRS-17-05	Fluorene	8.52E+03	0.09	0.35	J		1464109.439	597681.240
09/28/2005	PRS-17-05	Hexachlorobenzene	1.70E+02	0.35	0.35	U		1464109.439	597681.240
09/28/2005	PRS-17-05	Hexachlorobutadiene	1.27E+03	0.35	0.35	U		1464109.439	597681.240
09/28/2005	PRS-17-05	Hexachlorocyclopentadiene	1.27E+03	1.70	1.7	U		1464109.439	597681.240
09/28/2005	PRS-17-05	Hexachloroethane	2.13E+02	0.35	0.35	U		1464109.439	597681.240
09/28/2005	PRS-17-05	Indeno(1,2,3-cd)pyrene	4.08E+01	0.59	0.35			1464109.439	597681.240
09/28/2005	PRS-17-05	Iron	NC	12000.00	10.6	N		1464109.439	597681.240
09/28/2005	PRS-17-05	Isophorone	4.26E+04	0.35	0.35	U		1464109.439	597681.240
09/28/2005	PRS-17-05	Lead	448	15.30	0.32	N		1464109.439	597681.240
09/28/2005	PRS-17-05	Magnesium	NC	36200.00	5310	NE		1464109.439	597681.240
09/28/2005	PRS-17-05	Manganese	2.28E+04	391.00	1.6	E		1464109.439	597681.240
09/28/2005	PRS-17-05	Mercury	1.69E+01	0.13	0.035	N		1464109.439	597681.240
09/28/2005	PRS-17-05	Molybdenum	1.06E+03	1.60	4.3	B		1464109.439	597681.240
09/28/2005	PRS-17-05	Naphthalene	4.26E+03	0.35	0.35	U		1464109.439	597681.240
09/28/2005	PRS-17-05	Nickel	4.26E+03	9.70	4.3			1464109.439	597681.240

A17/49

Table 1: Offsite Verification Results (mg/kg)

[data acquired from MEIMS]

Date	Location	Analyte	CO	Result	DL	Lab Qual	Data Qual	X Coord	Y Coord
09/28/2005	PRS-17-05	Nitrobenzene	1.06E+02	0.35	0.35	U		1464109.439	597681.240
09/28/2005	PRS-17-05	N-Nitroso-di-n-propylamine	NC	0.35	0.35	U		1464109.439	597681.240
09/28/2005	PRS-17-05	N-Nitrosodiphenylamine	NC	0.35	0.35	U		1464109.439	597681.240
09/28/2005	PRS-17-05	Pentachlorophenol	6.39E+03	1.70	1.7	U		1464109.439	597681.240
09/28/2005	PRS-17-05	Phenanthrene	NC	1.10	0.35			1464109.439	597681.240
09/28/2005	PRS-17-05	Phenol	1.28E+05	0.35	0.35	U		1464109.439	597681.240
09/28/2005	PRS-17-05	Potassium	NC	1040.00	531			1464109.439	597681.240
09/28/2005	PRS-17-05	Pyrene	6.39E+03	1.30	0.35			1464109.439	597681.240
09/28/2005	PRS-17-05	Selenium	1.06E+03	0.53	0.53	U		1464109.439	597681.240
09/28/2005	PRS-17-05	Silver	1.06E+03	0.69	1.1	BN		1464109.439	597681.240
09/28/2005	PRS-17-05	Sodium	NC	122.00	531	B		1464109.439	597681.240
09/28/2005	PRS-17-05	Thallium	1.70E+01	1.10	1.1	U		1464109.439	597681.240
09/28/2005	PRS-17-05	Vanadium	1.49E+03	12.00	2.1			1464109.439	597681.240
09/28/2005	PRS-17-05	Zinc	6.39E+04	136.00	2.1	N		1464109.439	597681.240
09/28/2005	PRS-17-06	1,2,4-Trichlorobenzene	2.13E+03	0.37	0.37	U		1464121.080	597681.240
09/28/2005	PRS-17-06	1,2-Dichlorobenzene	1.92E+04	0.37	0.37	U		1464121.080	597681.240
09/28/2005	PRS-17-06	1,3-Dichlorobenzene	6.38E+03	0.37	0.37	U		1464121.080	597681.240
09/28/2005	PRS-17-06	1,4-Dichlorobenzene	1.54E+09	0.37	0.37	U		1464121.080	597681.240
09/28/2005	PRS-17-06	1-chloro-4-phenoxybenzene	NC	0.37	0.37	U		1464121.080	597681.240
09/28/2005	PRS-17-06	2,2'-oxybis(1-chloropropane)	8.52E+03	0.37	0.37	U		1464121.080	597681.240
09/28/2005	PRS-17-06	2,4,5-Trichlorophenol	2.13E+04	0.37	0.37	U		1464121.080	597681.240
09/28/2005	PRS-17-06	2,4,6-Trichlorophenol	NC	0.37	0.37	U		1464121.080	597681.240
09/28/2005	PRS-17-06	2,4-Dichlorophenol	6.39E+02	0.37	0.37	U		1464121.080	597681.240
09/28/2005	PRS-17-06	2,4-Dimethylphenol	4.26E+03	0.37	0.37	U		1464121.080	597681.240
09/28/2005	PRS-17-06	2,4-Dinitrophenol	4.26E+02	1.80	1.8	U		1464121.080	597681.240
09/28/2005	PRS-17-06	2,4-Dinitrotoluene	4.26E+02	0.37	0.37	U		1464121.080	597681.240
09/28/2005	PRS-17-06	2,6-Dinitrotoluene	2.13E+02	0.37	0.37	U		1464121.080	597681.240
09/28/2005	PRS-17-06	2-Chloronaphthalene	1.70E+04	0.37	0.37	U		1464121.080	597681.240
09/28/2005	PRS-17-06	2-Chlorophenol	1.06E+03	0.37	0.37	U		1464121.080	597681.240
09/28/2005	PRS-17-06	2-Methylnaphthalene	8.52E+02	0.37	0.37	U		1464121.080	597681.240
09/28/2005	PRS-17-06	2-Methylphenol	1.06E+04	0.37	0.37	U		1464121.080	597681.240
09/28/2005	PRS-17-06	2-Nitroaniline	6.39E+01	1.80	1.8	U		1464121.080	597681.240
09/28/2005	PRS-17-06	2-Nitrophenol	NC	0.37	0.37	U		1464121.080	597681.240
09/28/2005	PRS-17-06	3,3'-Dichlorobenzidine	NC	1.80	1.8	U		1464121.080	597681.240
09/28/2005	PRS-17-06	3-Nitroaniline	6.39E+01	1.80	1.8	U		1464121.080	597681.240
09/28/2005	PRS-17-06	4,6-Dinitro-o-Cresol	NC	1.80	1.8	U		1464121.080	597681.240
09/28/2005	PRS-17-06	4-Bromophenyl-phenyl Ether	NC	0.37	0.37	U		1464121.080	597681.240
09/28/2005	PRS-17-06	4-Chloro-3-methylphenol	NC	0.37	0.37	U		1464121.080	597681.240
09/28/2005	PRS-17-06	4-Chloroaniline	8.52E+02	0.37	0.37	U		1464121.080	597681.240
09/28/2005	PRS-17-06	4-Methylphenol	1.06E+03	0.73	0.73	U		1464121.080	597681.240
09/28/2005	PRS-17-06	4-Nitroaniline	6.39E+02	1.80	1.8	U		1464121.080	597681.240
09/28/2005	PRS-17-06	4-Nitrophenol	NC	1.80	1.8	U		1464121.080	597681.240
09/28/2005	PRS-17-06	Acenaphthene	1.28E+04	0.37	0.37	U		1464121.080	597681.240
09/28/2005	PRS-17-06	Acenaphthylene	1.28E+04	0.37	0.37	U		1464121.080	597681.240
09/28/2005	PRS-17-06	Aluminum	2.13E+05	5800.00	22.2	N		1464121.080	597681.240
09/28/2005	PRS-17-06	Anthracene	6.39E+04	0.16	0.37	J		1464121.080	597681.240
09/28/2005	PRS-17-06	Antimony	8.52E+01	1.10	1.1	UN		1464121.080	597681.240
09/28/2005	PRS-17-06	Arsenic	6.39E+01	5.40	1.1			1464121.080	597681.240
09/28/2005	PRS-17-06	Barium	1.49E+04	44.60	22.2			1464121.080	597681.240
09/28/2005	PRS-17-06	Benzo(a)anthracene	NC	0.62	0.37			1464121.080	597681.240
09/28/2005	PRS-17-06	Benzo(a)pyrene	4.08E+00	0.65	0.37			1464121.080	597681.240
09/28/2005	PRS-17-06	Benzo(b)fluoranthene	4.08E+01	0.60	0.37			1464121.080	597681.240
09/28/2005	PRS-17-06	Benzo(g,h,i)perylene	NC	0.43	0.37			1464121.080	597681.240
09/28/2005	PRS-17-06	Benzo(k)fluoranthene	4.08E+02	0.58	0.37			1464121.080	597681.240
09/28/2005	PRS-17-06	Beryllium	4.21E+02	0.40	0.55	B		1464121.080	597681.240
09/28/2005	PRS-17-06	Bis(2-chloroethoxy)methane	NC	0.37	0.37	U		1464121.080	597681.240
09/28/2005	PRS-17-06	Bis(2-chloroethyl)ether	4.26E+03	0.37	0.37	U		1464121.080	597681.240
09/28/2005	PRS-17-06	Bis(2-ethylhexyl)phthalate	4.26E+03	0.37	0.37	U		1464121.080	597681.240
09/28/2005	PRS-17-06	Butyl Benzyl Phthalate	4.26E+04	0.37	0.37	U		1464121.080	597681.240
09/28/2005	PRS-17-06	Cadmium	2.13E+02	0.55	0.55	U		1464121.080	597681.240
09/28/2005	PRS-17-06	Calcium	NC	108000.00	5540	N		1464121.080	597681.240
09/28/2005	PRS-17-06	Carbazole	NC	0.11	0.37	J		1464121.080	597681.240
09/28/2005	PRS-17-06	Chromium	3.19E+05	10.60	1.1	NE		1464121.080	597681.240
09/28/2005	PRS-17-06	Chrysene	NC	0.73	0.37			1464121.080	597681.240

Table 1: Offsite Verification Results (mg/kg)

[data acquired from MEIMS]

Date	Location	Analyte	CO	Result	DL	Lab Qual	Data Qual	X Coord	Y Coord
09/28/2005	PRS-17-06	Cobalt	1.28E+04	4.60	5.5	B		1464121.080	597681.240
09/28/2005	PRS-17-06	Copper	8.52E+03	36.80	2.8	N		1464121.080	597681.240
09/28/2005	PRS-17-06	Dibenz(a,h)anthracene	4.08E+00	0.12	0.37	J		1464121.080	597681.240
09/28/2005	PRS-17-06	Dibenzofuran	8.52E+02	0.37	0.37	U		1464121.080	597681.240
09/28/2005	PRS-17-06	Diethyl Phthalate	1.70E+05	0.37	0.37	U		1464121.080	597681.240
09/28/2005	PRS-17-06	Dimethyl Phthalate	NC	0.37	0.37	U		1464121.080	597681.240
09/28/2005	PRS-17-06	Di-n-butyl Phthalate	2.13E+04	0.37	0.37	U		1464121.080	597681.240
09/28/2005	PRS-17-06	Di-n-octyl Phthalate	4.26E+03	0.37	0.37	U		1464121.080	597681.240
09/28/2005	PRS-17-06	Fluoranthene	8.52E+03	1.50	0.37			1464121.080	597681.240
09/28/2005	PRS-17-06	Fluorene	8.52E+03	0.37	0.37	U		1464121.080	597681.240
09/28/2005	PRS-17-06	Hexachlorobenzene	1.70E+02	0.37	0.37	U		1464121.080	597681.240
09/28/2005	PRS-17-06	Hexachlorobutadiene	1.27E+03	0.37	0.37	U		1464121.080	597681.240
09/28/2005	PRS-17-06	Hexachlorocyclopentadiene	1.27E+03	1.80	1.8	U		1464121.080	597681.240
09/28/2005	PRS-17-06	Hexachloroethane	2.13E+02	0.37	0.37	U		1464121.080	597681.240
09/28/2005	PRS-17-06	Indeno(1,2,3-cd)pyrene	4.08E+01	0.46	0.37			1464121.080	597681.240
09/28/2005	PRS-17-06	Iron	NC	11500.00	11.1	N		1464121.080	597681.240
09/28/2005	PRS-17-06	Isophorone	4.26E+04	0.37	0.37	U		1464121.080	597681.240
09/28/2005	PRS-17-06	Lead	448	12.20	0.33	N		1464121.080	597681.240
09/28/2005	PRS-17-06	Magnesium	NC	37100.00	5540	NE		1464121.080	597681.240
09/28/2005	PRS-17-06	Manganese	2.28E+04	418.00	1.7	E		1464121.080	597681.240
09/28/2005	PRS-17-06	Mercury	1.69E+01	0.53	0.037	N		1464121.080	597681.240
09/28/2005	PRS-17-06	Molybdenum	1.06E+03	1.90	4.4	B		1464121.080	597681.240
09/28/2005	PRS-17-06	Naphthalene	4.26E+03	0.37	0.37	U		1464121.080	597681.240
09/28/2005	PRS-17-06	Nickel	4.26E+03	10.80	4.4			1464121.080	597681.240
09/28/2005	PRS-17-06	Nitrobenzene	1.06E+02	0.37	0.37	U		1464121.080	597681.240
09/28/2005	PRS-17-06	N-Nitroso-di-n-propylamine	NC	0.37	0.37	U		1464121.080	597681.240
09/28/2005	PRS-17-06	N-Nitrosodiphenylamine	NC	0.37	0.37	U		1464121.080	597681.240
09/28/2005	PRS-17-06	Pentachlorophenol	6.39E+03	1.80	1.8	U		1464121.080	597681.240
09/28/2005	PRS-17-06	Phenanthrene	NC	0.76	0.37			1464121.080	597681.240
09/28/2005	PRS-17-06	Phenol	1.28E+05	0.37	0.37	U		1464121.080	597681.240
09/28/2005	PRS-17-06	Potassium	NC	1180.00	554			1464121.080	597681.240
09/28/2005	PRS-17-06	Pyrene	6.39E+03	1.10	0.37			1464121.080	597681.240
09/28/2005	PRS-17-06	Selenium	1.06E+03	0.55	0.55	U		1464121.080	597681.240
09/28/2005	PRS-17-06	Silver	1.06E+03	0.53	1.1	BN		1464121.080	597681.240
09/28/2005	PRS-17-06	Sodium	NC	126.00	554	B		1464121.080	597681.240
09/28/2005	PRS-17-06	Thallium	1.70E+01	1.10	1.1	U		1464121.080	597681.240
09/28/2005	PRS-17-06	Vanadium	1.49E+03	12.70	2.2			1464121.080	597681.240
09/28/2005	PRS-17-06	Zinc	6.39E+04	91.60	2.2	N		1464121.080	597681.240
09/28/2005	PRS-17-07	1,2,4-Trichlorobenzene	2.13E+03	0.38	0.38	U		1464132.721	597681.240
09/28/2005	PRS-17-07	1,2-Dichlorobenzene	1.92E+04	0.38	0.38	U		1464132.721	597681.240
09/28/2005	PRS-17-07	1,3-Dichlorobenzene	6.38E+03	0.38	0.38	U		1464132.721	597681.240
09/28/2005	PRS-17-07	1,4-Dichlorobenzene	1.54E+09	0.38	0.38	U		1464132.721	597681.240
09/28/2005	PRS-17-07	1-chloro-4-phenoxybenzene	NC	0.38	0.38	U		1464132.721	597681.240
09/28/2005	PRS-17-07	2,2'-oxybis(1-chloropropane)	8.52E+03	0.38	0.38	U		1464132.721	597681.240
09/28/2005	PRS-17-07	2,4,5-Trichlorophenol	2.13E+04	0.38	0.38	U		1464132.721	597681.240
09/28/2005	PRS-17-07	2,4,6-Trichlorophenol	NC	0.38	0.38	U		1464132.721	597681.240
09/28/2005	PRS-17-07	2,4-Dichlorophenol	6.39E+02	0.38	0.38	U		1464132.721	597681.240
09/28/2005	PRS-17-07	2,4-Dimethylphenol	4.26E+03	0.38	0.38	U		1464132.721	597681.240
09/28/2005	PRS-17-07	2,4-Dinitrophenol	4.26E+02	1.80	1.8	U		1464132.721	597681.240
09/28/2005	PRS-17-07	2,4-Dinitrotoluene	4.26E+02	0.38	0.38	U		1464132.721	597681.240
09/28/2005	PRS-17-07	2,6-Dinitrotoluene	2.13E+02	0.38	0.38	U		1464132.721	597681.240
09/28/2005	PRS-17-07	2-Chloronaphthalene	1.70E+04	0.38	0.38	U		1464132.721	597681.240
09/28/2005	PRS-17-07	2-Chlorophenol	1.06E+03	0.38	0.38	U		1464132.721	597681.240
09/28/2005	PRS-17-07	2-Methylnaphthalene	8.52E+02	0.38	0.38	U		1464132.721	597681.240
09/28/2005	PRS-17-07	2-Methylphenol	1.06E+04	0.38	0.38	U		1464132.721	597681.240
09/28/2005	PRS-17-07	2-Nitroaniline	6.39E+01	1.80	1.8	U		1464132.721	597681.240
09/28/2005	PRS-17-07	2-Nitrophenol	NC	0.38	0.38	U		1464132.721	597681.240
09/28/2005	PRS-17-07	3,3'-Dichlorobenzidine	NC	1.80	1.8	U		1464132.721	597681.240
09/28/2005	PRS-17-07	3-Nitroaniline	6.39E+01	1.80	1.8	U		1464132.721	597681.240
09/28/2005	PRS-17-07	4,6-Dinitro-o-Cresol	NC	1.80	1.8	U		1464132.721	597681.240
09/28/2005	PRS-17-07	4-Bromophenyl-phenyl Ether	NC	0.38	0.38	U		1464132.721	597681.240
09/28/2005	PRS-17-07	4-Chloro-3-methylphenol	NC	0.38	0.38	U		1464132.721	597681.240
09/28/2005	PRS-17-07	4-Chloroaniline	8.52E+02	0.38	0.38	U		1464132.721	597681.240
09/28/2005	PRS-17-07	4-Methylphenol	1.06E+03	0.76	0.76	U		1464132.721	597681.240

Table 1: Offsite Verification Results (mg/kg)

[data acquired from MEIMS]

Date	Location	Analyte	CO	Result	DL	Lab Qual	Data Qual	X Coord	Y Coord
09/28/2005	PRS-17-07	4-Nitroaniline	6.39E+02	1.80	1.8	U		1464132.721	597681.240
09/28/2005	PRS-17-07	4-Nitrophenol	NC	1.80	1.8	U		1464132.721	597681.240
09/28/2005	PRS-17-07	Acenaphthene	1.28E+04	0.38	0.38	U		1464132.721	597681.240
09/28/2005	PRS-17-07	Acenaphthylene	1.28E+04	0.38	0.38	U		1464132.721	597681.240
09/28/2005	PRS-17-07	Aluminum	2.13E+05	5930.00	22.9	N		1464132.721	597681.240
09/28/2005	PRS-17-07	Anthracene	6.39E+04	0.38	0.38	U		1464132.721	597681.240
09/28/2005	PRS-17-07	Antimony	8.52E+01	1.10	1.1	UN		1464132.721	597681.240
09/28/2005	PRS-17-07	Arsenic	6.39E+01	6.20	1.1			1464132.721	597681.240
09/28/2005	PRS-17-07	Barium	1.49E+04	57.20	22.9			1464132.721	597681.240
09/28/2005	PRS-17-07	Benzo(a)anthracene	NC	0.24	0.38	J		1464132.721	597681.240
09/28/2005	PRS-17-07	Benzo(a)pyrene	4.08E+00	0.26	0.38	J		1464132.721	597681.240
09/28/2005	PRS-17-07	Benzo(b)fluoranthene	4.08E+01	0.25	0.38	J		1464132.721	597681.240
09/28/2005	PRS-17-07	Benzo(g,h,i)perylene	NC	0.18	0.38	J		1464132.721	597681.240
09/28/2005	PRS-17-07	Benzo(k)fluoranthene	4.08E+02	0.22	0.38	J		1464132.721	597681.240
09/28/2005	PRS-17-07	Beryllium	4.21E+02	0.44	0.57	B		1464132.721	597681.240
09/28/2005	PRS-17-07	Bis(2-chloroethoxy)methane	NC	0.38	0.38	U		1464132.721	597681.240
09/28/2005	PRS-17-07	Bis(2-chloroethyl)ether	4.26E+03	0.38	0.38	U		1464132.721	597681.240
09/28/2005	PRS-17-07	Bis(2-ethylhexyl)phthalate	4.26E+03	0.21	0.38	J		1464132.721	597681.240
09/28/2005	PRS-17-07	Butyl Benzyl Phthalate	4.26E+04	0.38	0.38	U		1464132.721	597681.240
09/28/2005	PRS-17-07	Cadmium	2.13E+02	0.57	0.57	U		1464132.721	597681.240
09/28/2005	PRS-17-07	Calcium	NC	157000.00	5720	N		1464132.721	597681.240
09/28/2005	PRS-17-07	Carbazole	NC	0.38	0.38	U		1464132.721	597681.240
09/28/2005	PRS-17-07	Chromium	3.19E+05	11.20	1.1	NE		1464132.721	597681.240
09/28/2005	PRS-17-07	Chrysene	NC	0.28	0.38	J		1464132.721	597681.240
09/28/2005	PRS-17-07	Cobalt	1.28E+04	4.90	5.7	B		1464132.721	597681.240
09/28/2005	PRS-17-07	Copper	8.52E+03	147.00	2.9	N		1464132.721	597681.240
09/28/2005	PRS-17-07	Dibenz(a,h)anthracene	4.08E+00	0.38	0.38	U		1464132.721	597681.240
09/28/2005	PRS-17-07	Dibenzofuran	8.52E+02	0.38	0.38	U		1464132.721	597681.240
09/28/2005	PRS-17-07	Diethyl Phthalate	1.70E+05	0.38	0.38	U		1464132.721	597681.240
09/28/2005	PRS-17-07	Dimethyl Phthalate	NC	0.38	0.38	U		1464132.721	597681.240
09/28/2005	PRS-17-07	Di-n-butyl Phthalate	2.13E+04	0.38	0.38	U		1464132.721	597681.240
09/28/2005	PRS-17-07	Di-n-octyl Phthalate	4.26E+03	0.38	0.38	U		1464132.721	597681.240
09/28/2005	PRS-17-07	Fluoranthene	8.52E+03	0.59	0.38			1464132.721	597681.240
09/28/2005	PRS-17-07	Fluorene	8.52E+03	0.38	0.38	U		1464132.721	597681.240
09/28/2005	PRS-17-07	Hexachlorobenzene	1.70E+02	0.38	0.38	U		1464132.721	597681.240
09/28/2005	PRS-17-07	Hexachlorobutadiene	1.27E+03	0.38	0.38	U		1464132.721	597681.240
09/28/2005	PRS-17-07	Hexachlorocyclopentadiene	1.27E+03	1.80	1.8	U		1464132.721	597681.240
09/28/2005	PRS-17-07	Hexachloroethane	2.13E+02	0.38	0.38	U		1464132.721	597681.240
09/28/2005	PRS-17-07	Indeno(1,2,3-cd)pyrene	4.08E+01	0.19	0.38	J		1464132.721	597681.240
09/28/2005	PRS-17-07	Iron	NC	11900.00	11.5	N		1464132.721	597681.240
09/28/2005	PRS-17-07	Isophorone	4.26E+04	0.38	0.38	U		1464132.721	597681.240
09/28/2005	PRS-17-07	Lead	448	15.90	0.34	N		1464132.721	597681.240
09/28/2005	PRS-17-07	Magnesium	NC	33100.00	5720	NE		1464132.721	597681.240
09/28/2005	PRS-17-07	Manganese	2.28E+04	360.00	1.7	E		1464132.721	597681.240
09/28/2005	PRS-17-07	Mercury	1.69E+01	0.10	0.038	N		1464132.721	597681.240
09/28/2005	PRS-17-07	Molybdenum	1.06E+03	1.50	4.6	B		1464132.721	597681.240
09/28/2005	PRS-17-07	Naphthalene	4.26E+03	0.38	0.38	U		1464132.721	597681.240
09/28/2005	PRS-17-07	Nickel	4.26E+03	10.60	4.6			1464132.721	597681.240
09/28/2005	PRS-17-07	Nitrobenzene	1.06E+02	0.38	0.38	U		1464132.721	597681.240
09/28/2005	PRS-17-07	N-Nitroso-di-n-propylamine	NC	0.38	0.38	U		1464132.721	597681.240
09/28/2005	PRS-17-07	N-Nitrosodiphenylamine	NC	0.38	0.38	U		1464132.721	597681.240
09/28/2005	PRS-17-07	Pentachlorophenol	6.39E+03	1.80	1.8	U		1464132.721	597681.240
09/28/2005	PRS-17-07	Phenanthrene	NC	0.31	0.38	J		1464132.721	597681.240
09/28/2005	PRS-17-07	Phenol	1.28E+05	0.38	0.38	U		1464132.721	597681.240
09/28/2005	PRS-17-07	Potassium	NC	936.00	572			1464132.721	597681.240
09/28/2005	PRS-17-07	Pyrene	6.39E+03	0.41	0.38			1464132.721	597681.240
09/28/2005	PRS-17-07	Selenium	1.06E+03	0.57	0.57	U		1464132.721	597681.240
09/28/2005	PRS-17-07	Silver	1.06E+03	0.57	1.1	BN		1464132.721	597681.240
09/28/2005	PRS-17-07	Sodium	NC	114.00	572	B		1464132.721	597681.240
09/28/2005	PRS-17-07	Thallium	1.70E+01	1.10	1.1	U		1464132.721	597681.240
09/28/2005	PRS-17-07	Vanadium	1.49E+03	13.70	2.3			1464132.721	597681.240
09/28/2005	PRS-17-07	Zinc	6.39E+04	100.00	2.3	N		1464132.721	597681.240
09/28/2005	PRS-17-08	1,2,4-Trichlorobenzene	2.13E+03	0.35	0.35	U		1464115.259	597671.159
09/28/2005	PRS-17-08	1,2-Dichlorobenzene	1.92E+04	0.35	0.35	U		1464115.259	597671.159

Table 1: Offsite Verification Results (mg/kg)

[data acquired from MEIMS]

Date	Location	Analyte	CO	Result	DL	Lab Qual	Data Qual	X Coord	Y Coord
09/28/2005	PRS-17-08	1,3-Dichlorobenzene	6.38E+03	0.35	0.35	U		1464115.259	597671.159
09/28/2005	PRS-17-08	1,4-Dichlorobenzene	1.54E+09	0.35	0.35	U		1464115.259	597671.159
09/28/2005	PRS-17-08	1-chloro-4-phenoxybenzene	NC	0.35	0.35	U		1464115.259	597671.159
09/28/2005	PRS-17-08	2,2'-oxybis(1-chloropropane)	8.52E+03	0.35	0.35	U		1464115.259	597671.159
09/28/2005	PRS-17-08	2,4,5-Trichlorophenol	2.13E+04	0.35	0.35	U		1464115.259	597671.159
09/28/2005	PRS-17-08	2,4,6-Trichlorophenol	NC	0.35	0.35	U		1464115.259	597671.159
09/28/2005	PRS-17-08	2,4-Dichlorophenol	6.39E+02	0.35	0.35	U		1464115.259	597671.159
09/28/2005	PRS-17-08	2,4-Dimethylphenol	4.26E+03	0.35	0.35	U		1464115.259	597671.159
09/28/2005	PRS-17-08	2,4-Dinitrophenol	4.26E+02	1.70	1.7	U		1464115.259	597671.159
09/28/2005	PRS-17-08	2,4-Dinitrotoluene	4.26E+02	0.35	0.35	U		1464115.259	597671.159
09/28/2005	PRS-17-08	2,6-Dinitrotoluene	2.13E+02	0.35	0.35	U		1464115.259	597671.159
09/28/2005	PRS-17-08	2-Chloronaphthalene	1.70E+04	0.35	0.35	U		1464115.259	597671.159
09/28/2005	PRS-17-08	2-Chlorophenol	1.06E+03	0.35	0.35	U		1464115.259	597671.159
09/28/2005	PRS-17-08	2-Methylnaphthalene	8.52E+02	0.22	0.35	J		1464115.259	597671.159
09/28/2005	PRS-17-08	2-Methylphenol	1.06E+04	0.35	0.35	U		1464115.259	597671.159
09/28/2005	PRS-17-08	2-Nitroaniline	6.39E+01	1.70	1.7	U		1464115.259	597671.159
09/28/2005	PRS-17-08	2-Nitrophenol	NC	0.35	0.35	U		1464115.259	597671.159
09/28/2005	PRS-17-08	3,3'-Dichlorobenzidine	NC	1.70	1.7	U		1464115.259	597671.159
09/28/2005	PRS-17-08	3-Nitroaniline	6.39E+01	1.70	1.7	U		1464115.259	597671.159
09/28/2005	PRS-17-08	4,6-Dinitro-o-Cresol	NC	1.70	1.7	U		1464115.259	597671.159
09/28/2005	PRS-17-08	4-Bromophenyl-phenyl Ether	NC	0.35	0.35	U		1464115.259	597671.159
09/28/2005	PRS-17-08	4-Chloro-3-methylphenol	NC	0.35	0.35	U		1464115.259	597671.159
09/28/2005	PRS-17-08	4-Chloroaniline	8.52E+02	0.35	0.35	U		1464115.259	597671.159
09/28/2005	PRS-17-08	4-Methylphenol	1.06E+03	0.71	0.71	U		1464115.259	597671.159
09/28/2005	PRS-17-08	4-Nitroaniline	6.39E+02	1.70	1.7	U		1464115.259	597671.159
09/28/2005	PRS-17-08	4-Nitrophenol	NC	1.70	1.7	U		1464115.259	597671.159
09/28/2005	PRS-17-08	Acenaphthene	1.28E+04	1.10	0.35			1464115.259	597671.159
09/28/2005	PRS-17-08	Acenaphthylene	1.28E+04	0.35	0.35	U		1464115.259	597671.159
09/28/2005	PRS-17-08	Aluminum	2.13E+05	4620.00	21.4	N		1464115.259	597671.159
09/28/2005	PRS-17-08	Anthracene	6.39E+04	2.90	0.35			1464115.259	597671.159
09/28/2005	PRS-17-08	Antimony	8.52E+01	1.10	1.1	UN		1464115.259	597671.159
09/28/2005	PRS-17-08	Arsenic	6.39E+01	4.70	1.1			1464115.259	597671.159
09/28/2005	PRS-17-08	Barium	1.49E+04	33.10	21.4			1464115.259	597671.159
09/28/2005	PRS-17-08	Benzo(a)anthracene	NC	4.30	0.35			1464115.259	597671.159
09/28/2005	PRS-17-08	Benzo(a)pyrene	4.08E+00	3.40	0.35			1464115.259	597671.159
09/28/2005	PRS-17-08	Benzo(b)fluoranthene	4.08E+01	3.50	0.35			1464115.259	597671.159
09/28/2005	PRS-17-08	Benzo(g,h,i)perylene	NC	1.90	0.35			1464115.259	597671.159
09/28/2005	PRS-17-08	Benzo(k)fluoranthene	4.08E+02	2.80	0.35			1464115.259	597671.159
09/28/2005	PRS-17-08	Beryllium	4.21E+02	0.33	0.54	B		1464115.259	597671.159
09/28/2005	PRS-17-08	Bis(2-chloroethoxy)methane	NC	0.35	0.35	U		1464115.259	597671.159
09/28/2005	PRS-17-08	Bis(2-chloroethyl)ether	4.26E+03	0.35	0.35	U		1464115.259	597671.159
09/28/2005	PRS-17-08	Bis(2-ethylhexyl)phthalate	4.26E+03	0.35	0.35	U		1464115.259	597671.159
09/28/2005	PRS-17-08	Butyl Benzyl Phthalate	4.26E+04	0.35	0.35	U		1464115.259	597671.159
09/28/2005	PRS-17-08	Cadmium	2.13E+02	0.54	0.54	U		1464115.259	597671.159
09/28/2005	PRS-17-08	Calcium	NC	112000.00	5350	N		1464115.259	597671.159
09/28/2005	PRS-17-08	Carbazole	NC	1.70	0.35			1464115.259	597671.159
09/28/2005	PRS-17-08	Chromium	3.19E+05	9.20	1.1	NE		1464115.259	597671.159
09/28/2005	PRS-17-08	Chrysene	NC	4.30	0.35			1464115.259	597671.159
09/28/2005	PRS-17-08	Cobalt	1.28E+04	3.80	5.4	B		1464115.259	597671.159
09/28/2005	PRS-17-08	Copper	8.52E+03	30.30	2.7	N		1464115.259	597671.159
09/28/2005	PRS-17-08	Dibenz(a,h)anthracene	4.08E+00	0.75	0.35			1464115.259	597671.159
09/28/2005	PRS-17-08	Dibenzofuran	8.52E+02	0.90	0.35			1464115.259	597671.159
09/28/2005	PRS-17-08	Diethyl Phthalate	1.70E+05	0.35	0.35	U		1464115.259	597671.159
09/28/2005	PRS-17-08	Dimethyl Phthalate	NC	0.35	0.35	U		1464115.259	597671.159
09/28/2005	PRS-17-08	Di-n-butyl Phthalate	2.13E+04	0.35	0.35	U		1464115.259	597671.159
09/28/2005	PRS-17-08	Di-n-octyl Phthalate	4.26E+03	0.35	0.35	U		1464115.259	597671.159
09/28/2005	PRS-17-08	Fluoranthene	8.52E+03	13.00	1.8	D		1464115.259	597671.159
09/28/2005	PRS-17-08	Fluorene	8.52E+03	1.50	0.35			1464115.259	597671.159
09/28/2005	PRS-17-08	Hexachlorobenzene	1.70E+02	0.35	0.35	U		1464115.259	597671.159
09/28/2005	PRS-17-08	Hexachlorobutadiene	1.27E+03	0.35	0.35	U		1464115.259	597671.159
09/28/2005	PRS-17-08	Hexachlorocyclopentadiene	1.27E+03	1.70	1.7	U		1464115.259	597671.159
09/28/2005	PRS-17-08	Hexachloroethane	2.13E+02	0.35	0.35	U		1464115.259	597671.159
09/28/2005	PRS-17-08	Indeno(1,2,3-cd)pyrene	4.08E+01	2.20	0.35			1464115.259	597671.159
09/28/2005	PRS-17-08	Iron	NC	9810.00	10.7	N		1464115.259	597671.159

A21/49

Table 1: Offsite Verification Results (mg/kg)

[data acquired from MEIMS]

Date	Location	Analyte	CO	Result	DL	Lab Qual	Data Qual	X Coord	Y Coord
09/28/2005	PRS-17-08	Isophorone	4.26E+04	0.35	0.35	U		1464115.259	597671.159
09/28/2005	PRS-17-08	Lead	448	9.90	0.32	N		1464115.259	597671.159
09/28/2005	PRS-17-08	Magnesium	NC	42100.00	5350	NE		1464115.259	597671.159
09/28/2005	PRS-17-08	Manganese	2.28E+04	283.00	1.6	E		1464115.259	597671.159
09/28/2005	PRS-17-08	Mercury	1.69E+01	0.42	0.036	N		1464115.259	597671.159
09/28/2005	PRS-17-08	Molybdenum	1.06E+03	1.50	4.3	B		1464115.259	597671.159
09/28/2005	PRS-17-08	Naphthalene	4.26E+03	0.60	0.35			1464115.259	597671.159
09/28/2005	PRS-17-08	Nickel	4.26E+03	8.80	4.3			1464115.259	597671.159
09/28/2005	PRS-17-08	Nitrobenzene	1.06E+02	0.35	0.35	U		1464115.259	597671.159
09/28/2005	PRS-17-08	N-Nitroso-di-n-propylamine	NC	0.35	0.35	U		1464115.259	597671.159
09/28/2005	PRS-17-08	N-Nitrosodiphenylamine	NC	0.35	0.35	U		1464115.259	597671.159
09/28/2005	PRS-17-08	Pentachlorophenol	6.39E+03	1.70	1.7	U		1464115.259	597671.159
09/28/2005	PRS-17-08	Phenanthrene	NC	12.00	1.8	D		1464115.259	597671.159
09/28/2005	PRS-17-08	Phenol	1.28E+05	0.35	0.35	U		1464115.259	597671.159
09/28/2005	PRS-17-08	Potassium	NC	876.00	535			1464115.259	597671.159
09/28/2005	PRS-17-08	Pyrene	6.39E+03	8.50	1.8	D		1464115.259	597671.159
09/28/2005	PRS-17-08	Selenium	1.06E+03	0.54	0.54	U		1464115.259	597671.159
09/28/2005	PRS-17-08	Silver	1.06E+03	0.37	1.1	BN		1464115.259	597671.159
09/28/2005	PRS-17-08	Sodium	NC	135.00	535	B		1464115.259	597671.159
09/28/2005	PRS-17-08	Thallium	1.70E+01	1.10	1.1	U		1464115.259	597671.159
09/28/2005	PRS-17-08	Vanadium	1.49E+03	10.80	2.1			1464115.259	597671.159
09/28/2005	PRS-17-08	Zinc	6.39E+04	76.10	2.1	N		1464115.259	597671.159

N (organics) presumptive evidence of the presence of the material
E (organics) concentration exceeds calibration range
B: (organics) compound was also found in the blank
N (inorganics) spiked sample recovery not within control limits
E (inorganics) estimated value
B: (inorganics) estimated value but below the CRDL (contract required detection limit)

J: estimated
U: not detected
Qual: qualifier
DL: detection Limit
CO: cleanup objective
NC: not calculated
F: indicates field duplicate
MEIMS: Mound Environmental Information Management System

Table 2: Onsite Gamma Spec Results (pCi/g)

[data acquired from MEIMS]

Date	Location	Analyte	Cleanup Objective	Result	Minimum Detectable Activity	Lab Qualifier
09/28/2005	PRS-17-01	Actinium-227	4.6	0.22	0.22	U
09/28/2005	PRS-17-01	Americium-241	63	0.07	0.07	U
09/28/2005	PRS-17-01	Cesium-137	3.8	0.04	0.04	U
09/28/2005	PRS-17-01	Cobalt-60	0.7	0.06	0.06	U
09/28/2005	PRS-17-01	Lead-210	7.4	0.90	0.58	
09/28/2005	PRS-17-01	Plutonium-238	55	12.51	12.51	U
09/28/2005	PRS-17-01	Radium-226	2.9	1.03	0.71	
09/28/2005	PRS-17-01	Thorium-230	2.8	5.62	5.62	U
09/28/2005	PRS-17-01	Thorium-232	2.1	0.20	0.18	
09/28/2005	PRS-17-02	Actinium-227	4.6	0.25	0.25	U
09/28/2005	PRS-17-02	Americium-241	63	0.08	0.08	U
09/28/2005	PRS-17-02	Cesium-137	3.8	0.06	0.06	
09/28/2005	PRS-17-02	Cobalt-60	0.7	0.05	0.05	U
09/28/2005	PRS-17-02	Lead-210	7.4	0.74	0.74	U
09/28/2005	PRS-17-02	Plutonium-238	55	14.20	14.2	U
09/28/2005	PRS-17-02	Radium-226	2.9	1.11	0.72	
09/28/2005	PRS-17-02	Thorium-230	2.8	6.83	6.83	U
09/28/2005	PRS-17-02	Thorium-232	2.1	0.50	0.16	
09/28/2005	PRS-17-02F	Actinium-227	4.6	0.25	0.25	U
09/28/2005	PRS-17-02F	Americium-241	63	0.08	0.08	U
09/28/2005	PRS-17-02F	Cesium-137	3.8	0.06	0.06	U
09/28/2005	PRS-17-02F	Cobalt-60	0.7	0.05	0.05	U
09/28/2005	PRS-17-02F	Lead-210	7.4	1.02	0.69	
09/28/2005	PRS-17-02F	Plutonium-238	55	13.52	13.52	U
09/28/2005	PRS-17-02F	Radium-226	2.9	1.40	0.76	
09/28/2005	PRS-17-02F	Thorium-230	2.8	7.71	7.71	U
09/28/2005	PRS-17-02F	Thorium-232	2.1	0.43	0.19	
09/28/2005	PRS-17-03	Actinium-227	4.6	0.23	0.23	U
09/28/2005	PRS-17-03	Americium-241	63	0.08	0.08	U
09/28/2005	PRS-17-03	Cesium-137	3.8	0.07	0.07	U
09/28/2005	PRS-17-03	Cobalt-60	0.7	0.05	0.05	U
09/28/2005	PRS-17-03	Lead-210	7.4	1.39	0.67	
09/28/2005	PRS-17-03	Plutonium-238	55	14.16	14.16	U
09/28/2005	PRS-17-03	Radium-226	2.9	0.89	0.79	
09/28/2005	PRS-17-03	Thorium-230	2.8	6.49	6.49	U
09/28/2005	PRS-17-03	Thorium-232	2.1	0.38	0.17	
09/28/2005	PRS-17-04	Actinium-227	4.6	0.29	0.29	U
09/28/2005	PRS-17-04	Americium-241	63	0.08	0.08	U
09/28/2005	PRS-17-04	Cesium-137	3.8	0.05	0.05	U
09/28/2005	PRS-17-04	Cobalt-60	0.7	0.08	0.08	U
09/28/2005	PRS-17-04	Lead-210	7.4	0.75	0.75	U
09/28/2005	PRS-17-04	Plutonium-238	55	12.81	12.81	U
09/28/2005	PRS-17-04	Radium-226	2.9	0.86	0.86	U
09/28/2005	PRS-17-04	Thorium-230	2.8	6.43	6.43	U
09/28/2005	PRS-17-04	Thorium-232	2.1	0.31	0.18	
09/28/2005	PRS-17-05	Actinium-227	4.6	0.26	0.26	U
09/28/2005	PRS-17-05	Americium-241	63	0.08	0.08	U
09/28/2005	PRS-17-05	Cesium-137	3.8	0.08	0.08	U
09/28/2005	PRS-17-05	Cobalt-60	0.7	0.09	0.09	U
09/28/2005	PRS-17-05	Lead-210	7.4	1.13	0.65	
09/28/2005	PRS-17-05	Plutonium-238	55	13.55	13.55	U
09/28/2005	PRS-17-05	Radium-226	2.9	1.21	0.74	
09/28/2005	PRS-17-05	Thorium-230	2.8	7.24	7.24	U
09/28/2005	PRS-17-05	Thorium-232	2.1	0.25	0.25	U
09/28/2005	PRS-17-06	Actinium-227	4.6	0.24	0.24	U
09/28/2005	PRS-17-06	Americium-241	63	0.08	0.08	U
09/28/2005	PRS-17-06	Cesium-137	3.8	0.07	0.07	U
09/28/2005	PRS-17-06	Cobalt-60	0.7	0.05	0.05	U
09/28/2005	PRS-17-06	Lead-210	7.4	0.81	0.81	U
09/28/2005	PRS-17-06	Plutonium-238	55	14.23	14.23	U
09/28/2005	PRS-17-06	Radium-226	2.9	1.50	0.76	
09/28/2005	PRS-17-06	Thorium-230	2.8	6.98	6.98	U
09/28/2005	PRS-17-06	Thorium-232	2.1	0.35	0.23	
09/28/2005	PRS-17-07	Actinium-227	4.6	0.25	0.25	U

A23/49

Table 2: Onsite Gamma Spec Results (pCi/g)

[data acquired from MEIMS]

Date	Location	Analyte	Cleanup Objective	Result	Minimum Detectable Activity	Lab Qualifier
09/28/2005	PRS-17-07	Americium-241	63	0.09	0.07	
09/28/2005	PRS-17-07	Cesium-137	3.8	0.05	0.05	
09/28/2005	PRS-17-07	Cobalt-60	0.7	0.08	0.08	U
09/28/2005	PRS-17-07	Lead-210	7.4	0.83	0.75	
09/28/2005	PRS-17-07	Plutonium-238	55	13.80	13.8	U
09/28/2005	PRS-17-07	Radium-226	2.9	1.84	0.75	
09/28/2005	PRS-17-07	Thorium-230	2.8	7.60	7.6	U
09/28/2005	PRS-17-07	Thorium-232	2.1	0.30	0.22	
09/28/2005	PRS-17-08	Actinium-227	4.6	0.26	0.26	U
09/28/2005	PRS-17-08	Americium-241	63	0.08	0.08	U
09/28/2005	PRS-17-08	Cesium-137	3.8	0.06	0.06	U
09/28/2005	PRS-17-08	Cobalt-60	0.7	0.07	0.07	U
09/28/2005	PRS-17-08	Lead-210	7.4	1.00	0.68	
09/28/2005	PRS-17-08	Plutonium-238	55	14.23	14.23	U
09/28/2005	PRS-17-08	Radium-226	2.9	1.50	0.72	
09/28/2005	PRS-17-08	Thorium-230	2.8	7.45	7.45	U
09/28/2005	PRS-17-08	Thorium-232	2.1	0.46	0.2	

U: not detected
MEIMS: Mound Environmental Information Management System

A24/49

APPENDIX C

EXCERPT FROM PRE-EX SUD

A25/49

This page intentionally left blank.

Survey Unit Design (SUD)

Project: **PRS 17: Removal Action for Building 34 Oil Burn Structure**

Review & Approval

Project Engineer: Karen Arthur _____

Reviewer: James Fontaine Cline for J. Fontaine

Reviewer: _____

Document	Title
Fact Sheet	PRS 17: Building 34 Oil Burn Structure, Final April, 2004
WP	ER-04-025: PRS 17 Removal Action
VSAP	Standard Verification Sampling & Analysis Plan, Final August 2004
CRA	Contingent Removal Action Memorandum, June 2002, Final

X Pre-Excavation or ❑ Post-Excavation SUD

Summary of Changes (for Final SUDs ONLY) (See following pages for details)	YES	NO
1. Did the COC(s) change?		
2. Did the grid size or N change?		
3. Did the classification change?		
4. Were bias/judgmental samples collected?		
5. Other significant change?		

A26/49

Acronyms

AM	Action Memorandum
CO	Cleanup Objective
COC	Contaminant of Concern
Chem	Chemical
dev	deviation
Iso	Isotopic
EPA	Environmental Protection Agency
FSS	Final Status Survey
HS	Hot Spot
MARSSIM	Multi – Agency Radiation Survey and Site Investigation Manual
MD	Mound Document
MDC	Minimum Detectable Concentration
MEIMS	Mound Environmental Information Management System
NA or N/A	Non-applicable
NC	No Change
pCi/g	Pico-Curie(s) per gram
PRS	Potential Release Site
Pu	Plutonium
QA/QC	Quality Assurance/Quality Control
RA	Remedial Action/Removal Action
RadCon	Radiological Control
RASS	Remedial Action Support Survey
RP	Removal Plan
SPF	Survey Plan Form
RSDS	Radiological Survey Data Sheet
(s) Or s	effective standard deviation (MARSSIM)
Std	standard
SU	Survey Unit
SUD	Survey Unit Design
TBD	To Be Determined
Th	Thorium
U	Uranium
VSAP	Verification Sampling and Analysis Plan
VSP	Visual Sample Plan
WP	Work Package/Work Plan

A27/49

SUD Worksheet

Item 1

Summary of historic **information** relevant to SU:

The Removal Action associated with this SUD addresses identified contamination areas with two contaminants of concern (COC) **above the cleanup objective (CO)**.

The scope of PRS 17 is to demolish the Burn Pit structure, remove the chemically contaminated soil covering the concrete floor, address the subsequent waste management and disposal of the contaminated soil, perform verification samples per this SUD, and restore the site upon project completion. This SUD is part of the Removal Action described in the Public Fact Sheet, PRS 17: Building 34 Oil Burn Structure, April 2004. PRS 17 is several feet above the Site Drainage Ditch (PRS 67/ 41) and is isolated from runoff from any other contamination source.

Potential Release Site (PRS) 17 is also known as the Building 34 Oil Burn Structure. Further Assessment Sampling of the PRS indicated the presence of lead and benzo (g, h, I) perylene. The process performed at PRS 17 involved the burning of aviation fuel to conduct flame tests on shipping containers. Further Assessment sampling determined the Contaminants of Concern (COCs) to be lead (3,100 mg/kg vs. 448 mg/kg US EPA Guidance for industrial receptor) and benzo (g, h, I) perylene (2.2 mg/kg vs. 0.41 mg/kg Clean-up Objective) as referenced in the **Public Fact Sheet, April 2004, Final.**

Item 2

Summary of historic **data** relevant to SU:

The depth of contamination varies from the surface to a maximum of about 6 inches within the PRS. Concentration of Lead varied from non-detects to a maximum of 3,100 mg/kg. The concentration of benzo (g, h, I) perylene varied from non-detects to a maximum of 2.2 mg/kg. Further Assessment sampling has identified isolated areas of lead and benzo (g, h, I) perylene contamination above the CO. These sample results are from a sediment sample taken inside the Burn Pit (MND33-0141, 20 Feb. 1992). For the locations covered by this SUD there are no other contaminants greater than the Cleanup Objective (CO).

Historic sample results are listed that fall below the CO in Attachment B.

Item 3a

COC	BASIS	Bkgd. (mg / kg)	Maximum Concentration (mg / kg)	CO (mg / kg)	Offsite Analysis & Compendium Method
Lead	PRS 17: Building 34 Oil Burn Structure Public Fact Sheet, April 2004, Final	48	3100	448	A-005 CLP Metals/ ILMO3.0
Benzo (g, h, I) perylene	PRS 17: Building 34 Oil Burn Structure Public Fact Sheet, April 2004, Final	N/A	2.2	0.41	A-028: Semi-Volatile Analysis – EPA Method 8270

A28/49

Analyses are to be performed per Mound Methods Compendium for the COC (for surface samples/analysis i.e., bedrock, asphalt, concrete) as applicable.

Changes if any, from Pre-Ex SUD:

Item 3b

Chem basis for std dev, AM COCs/ New COCs Attachment A

Simulated as-left data was used for this calculation.

Item 4

Classify Areas & provide justification

The Area is Class 1 due to process history and contamination identified during further assessment sampling above the CO.

Note: A best effort will be given utilizing the standard VSAP, Final, August 2004, Section 4.4 Special Considerations.

Selection	Class	Scan Coverage guidelines
X	1	100%
	2	10-90%
	3	Judgmental

Changes if any, from Pre-Ex SUD:

A29/49

Item 5	Subdivide areas into SUs: This SUD consists of one SU, SU1. SU1 is anticipated to be 26 feet wide X 36 feet long. The concrete slab and soil excavation is anticipated to be 1 foot in depth. See Attachment B for Data See Attachment C for the MARSSIM Spreadsheet	SU1 is, approximately 938.8 sq. ft. (See **Figure 2**)

Item 6a

Calculations / Rad

1. Calculate the (s) for each COC listed above: See **Attachment C**.

2. Number of Samples (N): See **Attachment C**.

Spreadsheet Calculated = 8 samples based upon all the data within PRS 17: SU1.

SU1 Scanning MDC (Area Factor) corrected = NA, no Pu-238

Visual Sample Plan (VSP) 15 foot triangular grid:

SU1 Calculated = **8** Selected Samples (on Map) = **8**

Sample locations were selected by VSP with sampling goals of finding a Hot Spot utilizing a 15-foot triangular grid with a random starting point. Additional samples will be chosen via judgmental sampling. Sample locations will be surveyed at the time of sampling or closely following.

Note: Due to safety concerns of placing an individual in the excavation, FSS sampling in trenches deeper than 4 feet will be accomplished with an excavator bucket and subsequent sampling of the material in the bucket in accordance with the procedures established the standard VSAP, Final, August 2004, Section 4.4 Special Considerations.

Changes if any, from Pre-Ex SUD:

Item 6b	Calculations/Chem, Std dev, Number of Samples	**Attachment C.**

Changes if any, from Pre-Ex SUD:

Item 7	Grid spacing	From **Attachment C**. There is no scanning MDC for chemicals. Therefore, it defaulted to using a 15-foot triangular grid with a random start point to obtain geographic coverage.

A30/49

	Changes if any, from Pre-Ex SUD:
Item 8	**QA/QC:** Collection of QA/QC samples shall be in accordance with the Standard VSAP, Final, August 2004. Q-002 Chain-of-Custody Procedures Q-003 Documentation Requirements Q-004 Laboratory Data Reduction Q-006 Validation of Laboratory Data Packages Q-007 Data Assessment Q-008 Data Integrity Verification Q-010 Electronic Data Deliverable Format Specifications – MEIMS Std. ... S-001 General Instructions for Field Personnel S-002 Soil Sampling With a Spade and Scoop S-028 Sample Control and Documentation S-029 Guide to Handling, Packaging, and Shipping of Samples and Method Q-002
Item 9	Bias/ judgment samples. (Additional bias samples are always within the discretion of the EPA.) The OPEA has requested three bias samples and CH2M Hill will comply with this request.
Item 10	Not otherwise covered.../ comments Site policy requires performance of onsite soil screening (NaI or germanium) on verification samples slated for offsite analysis and evaluation of the results prior to shipment. This analysis will generally be performed on a split of the verification sample containerized in an EPA dish (approximately 500 mL) but may be performed on the actual verification sample as long as containerization requirements are maintained for the offsite lab. Count time of the analysis will be sufficient to meet the cleanup objectives (COs) of the contaminants of concern (COCs) requiring verification. If there is an insufficient volume of material to fill an EPA dish within a 1m x 1m square centered on the proposed sample location, due to bedrock or obstruction (such as a structure, foundation, concrete, pavement/asphalt, large rock formations, utility bank, etc. which is not to be removed), then sediment/soil analysis location will be offset to the nearest location that a sample can be taken and shown on the map. Accessibility for sampling is a constraining factor. Sampling of the excavation walls may be impeded due to excavation wall accessibility by both personnel and equipment. Sidewall sampling will be performed via excavator sampling. Accessibility to the excavation floor by personnel may be impeded due to the width of the excavation not being sufficient to use a man-box for access. Where sufficient volume of soil exists and is accessible with an excavator a soil sample will be taken otherwise a surface survey (swipe and direct) will be performed utilizing methods available from atop the excavation. Potentially impacted work areas atop the excavation, where excavated materials were loaded into haulers, and are not hard surfaces (i.e., concrete and asphalt) are shown as part of the SU. Potentially impacted work area atop the excavation, where excavated materials were loaded into haulers, and are hard surfaces (i.e., concrete and asphalt) will be surveyed and released per RadCon procedures in accordance **with DOE Order 5400.5 and Mound 2000 Work Plan Appendix A Table 1**. *Area used to stage the debris; If any contamination is found > CO add this area to the SU-1 and verify it clean per the Post–Ex SUD.

A31/49

APPENDIX D

STATISTICAL INFORMATION

A32/49

This page intentionally left blank.

PRS 17 standard deviation of offsite verification results for recalculation of N

results in mg/kg

sample location	Lead	Benzo(ghi)perylene
PRS 17-01	15.2	1.4
PRS 17-02	15.1	0.25
PRS 17-02FD	11.1	0.22
PRS 17-03	11	1.3
PRS 17-04	12.4	0.14
PRS 17-05	15.3	0.55
PRS 17-06	12.2	0.43
PRS 17-07	15.9	0.18
PRS 17-08	9.9	1.9
std dev =	**2.264827685**	**0.652088525**

A33/49

Sample Standard Deviation (s)	VOC	Cleanup Objective	Units
2.26	Pb	448	mg/kg
0.652	Benzo(ghi)perylene	4.1	mg/kg

PRS 17 Re-calculation w/FSS data

Type I Error	0.05
$Z_{1\text{-alpha}}$	1.645
Type II Error	0.2
$Z_{1\text{-beta}}$	0.842
Effective	0.16 *(s)*
Sign p	0.977250

Calculate the Total Effective (s)

Estimate (N) - Sign Test

DCGL	1
LBGR	0.68
Delta	0.32
(s)	0.16
Rel Shift	2.011
(N)	9.00

Sample Grid Spacing

SU Area	87.33	m^2
Grid Length	2.9	m
Grid Height	2.5	m

Sample Grid Spacing

SU Area	939	ft^2
Grid Length	9.5	ft
Grid Height	8.2	ft

PRS	17

Survey Unit	1

434/49

APPENDIX E

DATA REVIEW & VALIDATION

A35/49

1.0 Introduction

Analytical data assessment can be performed on many quality control levels. On the most basic level the data can be reviewed for completeness. Does the reported data cover the intended samples? Were the samples analyzed for the planned analyses? Does the data package contain all the information called for by the SOW and/or SAP?

The next level, a Data Review, involves an assessment of the quality controls used by the laboratory during the performance of the analysis. These include such things as laboratory blanks, System Monitoring Compound (surrogate) recoveries, matrix spikes, etc. Were the correct QC controls used, and does the QC data support that the analyses were performed correctly? Which quality controls are assessed and what criteria are applied depend on the analysis performed and the sample matrix. The results of field quality control measures such as field duplicates and trip blanks may also be evaluated. Data Review is normally performed on 100% of the analytical data.

A full Data Validation is a much more time-intensive, detailed review of the entire laboratory data package. It includes all the elements of the Data Review plus verification of such things as proper instrument calibration, appropriate use of standards and correct performance of data calculations. Data Validation is used to identify systemic problems with the way the laboratory performs and reports analyses.

2.0 Description of the Data Set

Potential Release Site (PRS) 17 is also known as the Building 34 Oil Burn Structure. The processes performed at PRS 17 involved the burning of aviation fuel to conduct flame tests on shipping containers.

Prior soil sampling in the area shows radionuclides are not present at levels above cleanup objectives.

Contaminants of concern were picked based upon process knowledge and previous sampling performed in the area. Further Assessment sampling indicated that the Contaminants of Concern (COCs) are lead (3,100 mg/kg vs. 448 mg/kg US EPA Guidance for residential receptor) and benzo(g,h,I)perylene (2.2 mg/kg vs. 0.41 mg/kg Clean-up Objective) as referenced in the Public Fact Sheet, April 2004, Final.

One field duplicate was collected for the sampling event.

Samples were collected from all sample locations as planned. Hand scoops were used to collect soil from just below the surface level.

Separate, clean equipment was used a each sample location so no field decontamination of sampling equipment was performed during the sampling event and therefore no equipment rinsate samples were collected. The purpose of equipment rinsates are to indicate that field decontamination of the sample equipment was adequate to prevent cross contamination between samples.

A36/49

Trip Blanks are not indicated for semivolatile samples. No trip blanks were packaged and analyzed with the shipment of samples. The purpose of trip blanks is to indicate whether cross contamination of the samples occurred during transport of the samples from the field to the laboratory. The laboratory received no open or broken sample containers.

All samples in the sampling event were run for a long count screening at the Mound Soil Screening Laboratory (Gamma Spectroscopy) prior to off site analysis. Offsite chemical sample analyses were performed at Severn Trent Laboratories, St. Louis.

There was a wide variation in analyte concentration within the sample sets. When an analyte result exceeds the calibration range, the sample is diluted and rerun for that analyte. The optimal analyte results reflect their analysis at the least diluted concentration that is still within the calibration range. It should be further noted that there are only 1 SVOA analytes of interest and only QC directly or indirectly related to this analyte is being evaluated.

There were no problems associated with the documentation, shipment, or chain of custody of the samples. There were no problems in achieving the analyte detection goals.

Table 1 Sampling Event

Sample Date	LSDG	Number of Samples	Mound Sample IDs
9/28/05	F5J040119	9	PRS 17-01 PRS 17-02 PRS 17-02FD PRS 17 –03 PRS 17-04 PRS 17-05 PRS 17-06 PRS 17-07 PRS 17-08

LSDG – Laboratory Sample Delivery Group

3.0 Data Completeness

The correct samples were submitted and analyzed for the analyses requested.

The data package received back from the laboratory was complete.

4.0 Data Review

The quality control data submitted with the analytical data packages were reviewed and assessed. The results of the assessment are presented in this section. The following qualification flags are used to indicate data quality problems identified during the data review process.

A 37/49

Table 2. Data Review Qualifications

Flag	Description
J	Estimated sample result
U	Non-detect sample result
UJ	Estimated non-detected sample result
R	Rejected (unusable) sample result
E	Measured Analyte result exceeds calibration range
D	Analyte was determined from a diluted sample. Sample dilution appears in parentheses.

4.1 Holding Times

There is no EPA mandated technical hold time for SVOA analysis of soils. The recommended hold time for soil samples is 14 days until extraction.

All samples in this LSDG (lab sample delivery group) were analyzed for SVOA within 14 days.

4.2 GC/MS Instrument Performance Check

The successful analysis of the Instrument Performance Check of Bromofluorobenzene (IPC-BFB) solution must be performed at the beginning of each 12-hour period during which samples or standards are analyzed.

Successful IPC-BFB instrument tunings were run within 12 hours of the sample analyses and associated QC analyses.

4.3 Initial Calibration

Initial calibration (IC) standards containing both volatile target compounds and system monitoring compounds are analyzed at concentrations of 10, 20, 50, 100, and 200 µg/L at the beginning of each analytical sequence or as necessary if the continuing acceptance criteria are not met. The IC must be analyzed within 12 hours of the associated IPC-BFB. All Relative Response Factors (RRF) must be ≥ 0.05. The Percent Relative Standard Deviation (%RSD) for given standard concentration must be ≤ 30%.

The ICs for the target analytes were performed within 12 hours of an IPC-BFB. All IC RFFs for the target analytes were greater than 0.05 and the RSD%s were less than 30%

4.4 Continuing Calibration

Compliance requirements for satisfactory instrument calibration are established to ensure that the instrument is capable of producing acceptable quantitative data. Continuing Calibration Verifications (CCV) establishes that there is no significant drift in the RRF (Relative Response Factor) on which the quantitations are based and checks the satisfactory performance of the instrument on a day-to-day basis. All RRFs must be

A38/49

≥ 0.05. The Percent Difference (%D) for between the IC RRF and the CCV RRF must be within ± 20%.

The CCVs were performed within 12 hours of an IPC-BFB. All CCV RFFs were greater than 0.05 and the %Ds were less than 20%.

4.5 Blanks

The laboratory analyzes one method blank for every 20 samples or LSDG. Laboratory blanks are analyzed to determine if laboratory processes are contributing to the detected sample measurements. A method blank must be performed after the calibration standards.

All analytes of concern in the blanks associated with the verification samples met QC criteria.

All initial and continuing calibration blanks met QC criteria.

4.6 System Monitoring Compounds

Laboratory performance on individual samples is established by means of spiking activities. All samples are spiked with System Monitoring Compounds (SMC) just prior to sample purging. Since the effects of the sample matrix are frequently outside the control of the laboratory and may present relatively unique problems, the evaluation and review of the data based on specific sample results is frequently subjective and demands analytical experience and professional judgment.

All SMC recoveries were within QC limits.

4.7 Internal Standards

Internal Standards (IS) are spike compounds added to every sample. The measured analytes are computed in relation to the recovered IS. IS performance criteria ensure that GC/MS sensitivity and response are stable during each analysis. IS area counts must not vary by more than a factor of 2 from the associated 12hr. calibration standard. Retention time of each IS must not vary more than ± 30 seconds from the retention time of the associated 12hr. calibration standard.

All IS met QC criteria.

4.8 Matrix Spike

A matrix spike (MS) and a matrix spike duplicate (MSD) analysis are performed to assess the precision and accuracy of the laboratory analysis on the sample matrix at the time of the sample analysis. One MS/MSD spike is performed for every 20 samples or LSDG. It also may indicate analysis bias due to sample matrix effects. These data alone cannot be used to evaluate the precision and accuracy of individual samples. However, when exercising professional judgment, this data should be used in conjunction with other QC information.

The MS/MSD recoveries were low for three analytes (Phenanthrene, Fluoranthene, and Pyrene) indicating a possible slight low bias to the measurements for these analytes. All other recoveries were within QC limits.

4.9 Laboratory Control Sample

The Laboratory Control Sample (LCS) is a standard sample with a known quantity of the analyte(s) of concern. The LCS recovery is an indication of whether the analytical process was in control during the analysis. One LCS should be analyzed for every 20 samples or each LSDG.

All LCS recoveries of the target analytes were within QC requirements.

4.10 Equipment Rinsates

Equipment rinsates are used to ensure efficacy of equipment field decontamination procedures, and that the sample collection process is not causing cross contamination.

There were no equipment rinsates associated with these samples because of the use of dedicated sample equipment.

4.11 Trip Blanks

Trip Blanks are used to ensure no cross contamination of the samples occurred during shipment to the laboratory.

There was no trip blank (not required for SVOCs).

4.12 Field Duplicates

Field Duplicates give an indication of the degree of homogeneity within the sample material. As with Laboratory duplicates they are reported as RPD.

One field duplicate was collected for this data set. The field duplicate results are in good agreement.

5.0 Data Validation

The results of LSDG F5J040119 were fully data validated. In addition to the items discussed above, the following items were evaluated:

1. Instrument calibration calculations
2. Spike recovery calculations.
3. Sample run logs
4. Compound quantification calculations

No additional qualification resulted from this assessment. There was no indication of a systemic deficiency.

6.0 Certification

Based upon this review the SVOA analysis data may be used as presented with no further qualifications other than stated above.

Table 3 PRS 17 SVOA Analyses

	PQL	PRS 17-01	PRS 17-02	PRS 17-02 FD	PRS 17-03	PRS 17-04	PRS 17-05	PRS 17-06	PRS 17-07	PRS 17-08
Analyte	mg/kg	mg/kg	mg/kg	mg/kg	mg/kg	mg/kg	mg/kg	mg/kg	mg/kg	mg/kg
Phenol	0.35									
bis (2-Chloroethyl)-ether	0.35									
2-Chlorophenol	0.35									
1,3-Dichlorobenzene	0.35									
1,4-Dichlorobenzene	0.35									
1,2-Dichlorobenzene	0.35									
2-Methylphenol	0.35									
2,2'-oxybis(1-Chloropropane)	0.35									
4-Methylphenol	0.7									
N-Nitrosodi-n-propyl-amine	0.35									
Hexachloroethane	0.35									
Nitrobenzene	0.35									
Isophorene	0.35									
2-Nitrophenol	0.35									
2,4-Dimethylphenol	0.35									
bis(2-Chloroethoxy) methane	0.35									
2,4-Dichlorophenol	0.35									
1,2,4-Trichlorobenzene	0.35									
Naphthalene	0.35	*0.29*			*0.15*					0.60
4-Chloroaniline	0.35									
Hexachlorobutadiene	0.35									
4-Chloro-3-methylphenol	0.35									
2-Methylnaphthalene	0.35	*0.10*								*0.22*
Hexachlorocyclopentadiene	1.70									
2,4,6-Trichlorophenol	0.35									
2,4,5-Trichlorophenol	0.35									
2-Chloronaphthalene	0.35									
2-Nitroaniline	1.70									
Dimethyl phthalate	0.35									
Acenaphthylene	0.35	0.60								
2,6-Dinitrotoluene	0.35									
3-Nitroaniline	1.70									
Acenaphthene	0.35				0.59		*0.10*			1.10

A42/49

	PQL	PRS 17-01	PRS 17-02	PRS 17-02 FD	PRS 17-03	PRS 17-04	PRS 17-05	PRS 17-06	PRS 17-07	PRS 17-08
Analyte	mg/kg	mg/kg	mg/kg	mg/kg	mg/kg	mg/kg	mg/kg	mg/kg	mg/kg	mg/kg
2,4,-Dinitrophenol	1.70									
4-Nitrophenol	1.70									
Dibenzofuran	0.35	0.37			*0.28*					0.90
2,4-Dinitrotoluene	0.35									
Diethyl phthalate	0.35									
Fluorene	0.35	0.66			0.48		*0.09*			1.50
4-Chlorophenyl phenyl ether	0.35									
4-Nitroaniline	1.70									
4,6,-Dinitro-2-methylphenol	1.70									
N-Nitrosodiphenylamine	0.35									
4-Bromophenyl phenyl ether	0.35									
Hexachlorobenzene	0.35									
Pentachlorophenol	1.70									
Phenanthrene	0.35	5.20	0.41	0.46	4.20	*0.27*	1.10	0.76	*0.31*	12.00
Anthracene	0.35	1.30	*0.09*	*0.11*	0.84		*0.22*	*0.16*		2.90
Carbazole	0.35	0.75			0.57		*0.15*	*0.11*		1.70
Di-n-butyl phthalate	0.35									
Fluoranthene	0.35	7.20	0.76	0.78	5.40	0.44	1.90	1.50	0.59	13.00
Pyrene	0.35	5.10	0.56	0.57	4.00	*0.32*	1.30	1.10	0.41	8.50
Butyl benzyl phthalate	0.35	*0.08*								
Benzo(a)anthracene	0.35	2.80	*0.33*	*0.34*	2.10	*0.18*	0.75	0.62	*0.24*	4.30
3,3,'-Dichlorobenzidine	1.70									
Chrysene	0.35	3.10	0.39	0.39	2.40	*0.23*	0.88	0.73	*0.28*	4.30
bis (2-Ethylhexyl) phthalate	0.35	*0.18*							*0.21*	
Di-n-octyl phthalate	0.35									
Benzo(b)fluoranthene	0.35	2.30	*0.34*	*0.30*	1.90	*0.20*	0.72	0.60	*0.25*	3.50
Benzo(k)fluoranthene	0.35	2.10	*0.32*	*0.31*	1.80	*0.20*	0.73	0.58	*0.22*	2.80
Benzo(a)pyrene	0.35	2.50	0.37	*0.35*	2.10	*0.21*	0.80	0.65	*0.26*	3.40
Indeno(1,2,3-cd)pyrene	0.35	1.70	*0.25*	*0.23*	1.40	*0.15*	0.59	0.46	*0.19*	2.20
Benzo(ghi)perylene	0.35	1.40	*0.25*	0.22	1.30	*0.14*	0.55	0.43	*0.18*	1.90
Dibenzo (a,h) anthracene	0.35	0.46			0.48		*0.16*	*0.12*		0.75

Appended "FD" indicates a Field Duplicate sample.
Italic results are detection below Practical Quantitation Levels.

A43/49

1.0 Introduction

Analytical data assessment can be performed on many quality control levels. On the most basic level the data can be reviewed for completeness. Does the reported data cover the intended samples? Were the samples analyzed for the planned analyses? Does the data package contain all the information called for by the SOW and/or SAP?

The next level, a Data Review, involves an assessment of the quality controls used by the laboratory during the performance of the analysis. These include such things as laboratory blanks, system monitoring compound (surrogate) recoveries, matrix spikes, etc. Were the correct QC controls used, and does the QC data indicate the analyses were performed correctly? Which controls are assessed and what criteria are applied depend on the analysis performed and the sample matrix. The results of field quality control measures such as field duplicates and trip blanks may also be evaluated. Data Review is normally performed on 100% of the analytical data.

A full Data Validation is a much more time-intensive, detailed review of the entire laboratory data package. It includes all the elements of the Data Review plus verification of such things as proper instrument calibration, proper use of standards and correct performance of data calculations. Data Validation is used to identify systemic problems with the way the laboratory performs and reports analyses.

2.0 Description of the Data Set

Potential Release Site (PRS) 17 is also known as the Building 34 Oil Burn Structure. The processes performed at PRS 17 involved the burning of aviation fuel to conduct flame tests on shipping containers.

Prior soil sampling in the area shows radionuclides are not present at levels above cleanup objectives.

Contaminants of concern were picked based upon process knowledge and previous sampling performed in the area. Further Assessment sampling indicated that the Contaminants of Concern (COCs) are lead (3,100 mg/kg vs. 448 mg/kg US EPA Guidance for residential receptor) and benzo(g,h,I)perylene (2.2 mg/kg vs. 0.41 mg/kg Clean-up Objective) as referenced in the Public Fact Sheet, April 2004, Final.

One field duplicate was collected for the sampling event.

Samples were collected from all sample locations as planned. Hand scoops were used to collect soil from just below the surface level.

Separate, clean equipment was used a each location so no field decontamination of sampling equipment was performed during the sampling event and therefore no equipment rinsate samples were collected. The purpose of equipment rinsates are to indicate that field decontamination of the sample equipment was adequate to prevent cross contamination between samples.

Trip Blanks are not beneficial for metal samples. No trip blanks were packaged and analyzed with the shipment of samples. The purpose of trip blanks is to indicate whether cross contamination of the samples occurred during transport of the samples from the field to the laboratory. The laboratory received no open or broken sample containers.

All samples in the sampling event were run for a long count screening at the Mound Soil Screening Laboratory (Gamma Spectroscopy) prior to off site analysis. Offsite chemical sample analyses were performed at Severn Trent Laboratories, St. Louis.

There was a wide variation in analyte concentrations within the sample set. For example, Ca & Mg were orders of magnitude higher than Pb. When an analyte result exceeds the calibration range, the sample is diluted and rerun for that analyte. The optimal analyte results reflect their analysis at the least diluted concentration that is still within the calibration range. It should be further noted that there is only 1 metal analyte of interest (Pb) and only QC directly or indirectly related to this analyte is being evaluated.

There were no problems associated with the documentation, shipment, or chain of custody of the samples. There were no problems in achieving the analyte detection goals.

Table 1 Sampling Event

Sample Date	LSDG	Number of Samples	Mound Sample IDs
9/28/05	F5J040119	9	PRS 17-01 PRS 17-02 PRS 17-02FD PRS 17 –03 PRS 17-04 PRS 17-05 PRS 17-06 PRS 17-07 PRS 17-08

3.0 Data Completeness

The correct samples were submitted and analyzed for the analytes requested.

4.0 Data Review

The quality control data submitted with the analytical data packages were reviewed and assessed. The results of the assessment are presented in this section. The following qualification flags are used to indicate data quality problems identified during the data review process.

Table 2. Data Review Qualifications

Flag	Description
J	Estimated sample result
U	Non-detect sample result
UJ	Estimated non-detected sample result
R	Rejected (unusable) sample result
E	Measured Analyte result exceeds calibration range
D	Analyte was determined from a diluted sample. Sample dilution appears in parentheses.

4.1 Hold Times

There are no EPA mandated technical hold times for the metals analysis of soils. The recommended maximum hold time for water samples is 180 days until analysis.

All samples in this LSDG were within 28 days.

4.2 Blanks

The laboratory analyzes one method blank for every 20 samples or LSDG. Laboratory blanks are analyzed to determine if laboratory processes are contributing to the detected sample measurements. To meet the QC criteria the method blank must be ≤ 2 times the Practical Quantitation Limit (PQL). Trace amounts of Al, Mg, Fe, Zn, and Ca were detected.

The method blank associated with the verification samples met QC criteria.

The laboratory also analyzes one calibration blank after every 10 samples and before each initial and continuing calibration measurement. Calibration blanks are analyzed to determine if instrument operations are contributing to the detected sample measurements. To meet the QC criteria the method blank must be ≤ 2 times the PQL.

All initial and continuing calibration blanks met QC criteria.

4.3 Instrument Calibrations

The laboratory must successfully run a set of initial calibration samples each day. Immediately after each initial calibration, an initial calibration check sample must be run. To be successful initial calibration verification sample recoveries must be ± 10% of 100% for all metals except mercury. Mercury recovery must be ± 20% of 100%.

In addition a continuing calibration verification sample must be run after every 10 samples to ensure that the initial calibration still holds. The same criteria are used as with the initial calibration verification.

All initial and continuing calibration verifications met QC criteria.

4.4 Matrix Spike

A matrix spike (MS) and a matrix spike duplicate (MSD) analysis are performed to assess the precision and accuracy of the laboratory analysis. One MS/MSD spike is performed for every 20 samples or LSDG. It also may indicate analysis bias due to sample matrix effects.

Al, Cu, Fe, Zn, Mg, & Ca all had spike recoveries outside the QC criteria. This is primarily due to the sample concentrations of these analytes being high relative to the amount of spike added. Pb, Cr, and Hg all had one spike recovery slightly below QC criteria indicating a possible slight negative bias (i.e., results are lower than they should be) to the measurement of these metals. Of these elements only Pb is a contaminant of concern. All Pb detections were more than an order of magnitude below the levels of concern.

No qualification of the data was made based on MS/MSD data.

4.5 Laboratory Control Sample

The Laboratory Control Sample (LCS) is a standard sample with a known quantity of the analyte(s) of concern. The LCS recovery is an indication of whether the analytical process was in control during the analysis.

All LCS recoveries were within QC requirements.

4.6 Equipment Rinsates

Equipment rinsates are used to ensure efficacy of equipment field decontamination procedures, and that the sample collection process is not causing cross contamination.

No equipment rinsates were collected.

4.7 Field Duplicates

Field Duplicates give an indication of the degree of homogeneity within the sample material. As with Laboratory duplicates they are reported as RPD.

Agreement between the field duplicates (PRS 17-02 & PRS 17-02FD) was good.

5.0 Data Validation

The results of LSDG F5J040119 were fully data validated. In addition to the items discussed above, the following items were evaluated:

1. Instrument calibration calculations
2. Spike recovery calculations.
3. Sample run logs
4. Standard certifications

No additional qualification resulted from this assessment. There was no indication of a systemic deficiency.

6.0 Certification

Based upon this review the metal analysis data may be used as presented with no further qualifications.

Table 3 PRS 17 Soils Metal Analysis

	PQL	PRS 17-01	PRS 17-02	PRS 17-02 FD	PRS 17-03	PRS 17-04	PRS 17-05	PRS 17-06	PRS 17-07	PRS 17-08	Blank
	mg/kg	mg/kg	mg/kg	mg/kg	mg/kg	mg/kg	mg/kg	mg/kg	mg/kg	mg/kg	mg/kg
Aluminum	21.1	3,570	5,700	5,020	3,990	5,680	5,040	5,800	5,930	4,260	*6.2*
Arsenic	1.1	4.6	6.0	5.4	4.3	6.4	5.3	5.4	6.2	4.7	
Lead[1]	0.32	15.2	15.1	11.1	11.0	12.4	15.3	12.2	15.9	9.9	
Antimony	1.1										
Barium	21.1	30	45.7	36.2	34.6	44.8	42.1	*44.6*	57.2	33.1	
Selenium	0.53	*0.23*									
Beryllium	0.53	*0.31*	*0.41*	*0.37*	*0.32*	*0.42*	*0.39*	*0.4*	*0.44*	*0.33*	
Thallium	1.1	*1.1*				*0.7*					
Cadmium	0.53										
Chromium	1.1	11.7	*11.3*	10.3	7.1	11.7	11.3	10.6	11.2	9.2	
Cobalt	5.3	*4*	*5*	*3.7*	*3.6*	*5*	*4.4*	*4.6*	4.9	*3.8*	
Copper	2.6	88.3	30.8	24.7	46.3	29.4	47.7	36.8	147	30.3	
Iron	10.6	9,540	12,500	9,950	9,990	12,800	12,000	11,500	11,900	9,810	*1.5*
Magnesium	5,280	36,500	38,500	59,400	43,200	37,000	36,200	37,100	33,100	42,100	*7.8*
Manganese	1.6	332	383	301	357	343	391	418	360	283	
Nickel	4.2	7.8	11.5	9.1	11.7	11.1	9.7	10.8	10.6	8.8	
Potassium	528	779	1,190	1,140	874	1,310	1,040	1,180	936	876	
Silver	1.1	2.9	*0.48*	*0.3*	*0.5*	*0.36*	*0.69*	*0.53*	*0.57*	*0.37*	
Sodium	528	*141*	*135*	*167*	*150*	*114*	*122*	*126*	*114*	*135*	*19.1*
Vanadium	2.1	9.3	13	11.6	9.6	13.4	12.0	12.7	13.7	10.8	
Zinc	2.1	124	93.1	70.8	92.6	87.6	136	91.6	100	76.1	*0.76*
Molybdenum	4.2	*2*	*1.6*	*1.1*	*2.4*	*1.9*	*1.6*	*1.9*	*1.5*	*1.5*	
Mercury	0.035	0.79	0.60	0.54	0.14	0.20	0.13	0.53	0.10	0.42	
Calcium	5,280	132,000	106,000	132,000	142,000	99,900	118,000	108,000	157,000	112,000	*9.5*

Italics indicate analytes that were detected but are below Practical Quantitation Levels (PQL).
Banks cells are non-detects (i.e., < IDL)
Bold QC results are outside acceptance criteria

Footnote Concerning Lead Cleanup Level:

1. 400 mg/kg represents the USEPA's Region 9 remediation goal for residential property. The remediation goal for indusrial remediation is 800 mg/kg. See www.epa.gov/region09/waste/sfund/prg/files/o4prgtable.pdf.

4/4/4

ATTACHMENT B

GENERAL MEDIA INFORMATION

PUBLIC FACT SHEET

This Fact Sheet satisfies the Public Notification requirement set forth in the Contingent Action Memorandum[1].

Background. Potential Release Site (PRS) 17[2], also known as the Building 34 Oil Burn Structure, is located on the west central portion of the site as shown on Figure 1. The process performed at PRS 17 involved burning aviation fuel to conduct flame tests on shipping containers to confirm they meet Department of Transportation requirements. The structure was removed from service in 1979.

Further Assessment Sampling in and around the structure conducted as part of the OU-3 Limited Field Investigation (LFI) in 1991 indicated that all soil results around PRS 17 were below comparison values with the exception of thallium, with a maximum observed concentration of 0.53 mg/kg (estimated). Mound's background value for thallium is 0.46 mg/kg. Samples of the sediment inside the structure indicate the following contaminants above comparison values: cobalt (28 mg/kg vs. 19 mg/kg background), copper (92.8 mg/kg vs. 26 mg/kg background), lead (3100 mg/kg vs. 400 mg/kg US EPA guidance for residential receptor), and benzo(g,h,i)perylene (2.2 mg/kg vs. 0.41 mg/kg guideline).

Analytical results of water collected from inside the structure were also below contaminant comparison values except for thallium which was found at 0.0024 mg/L. The Maximum Contaminant Level (MCL) for thallium is 0.002 mg/L.

Based on the above results, the Core Team recommended a **Removal Action (RA)**. This RA will be performed per the Contingent Action Memo[1]. Based on the information above, the Contaminants of Concern (COCs) are thallium, cobalt, copper, lead, and benzo(g,h,i)perylene. However, Hazard Indices (HIs) are now available for thallium, cobalt, and copper (17, 12800, and 8520 mg/kg respectively). Since the sampling results do not exceed the HIs for thallium, cobalt, or copper: the COCs for the RA are lead and benzo(g,h,i)perylene.

PRS 17: Building 34 Oil Burn Structure

Analyte	Bkgd (mg/kg)	Maximum Concentration (mg/kg)	Cleanup Objective (mg/kg)
Lead	48	3100	448
Benzo(g,h,i) perylene	N/A	2.2	0.41

The USEPA guidance value for residential exposure to lead (400 mg/kg) is used to calculate the cleanup objective because toxicity values are not available to calculate a site-specific Risk Based Guideline Value. The Risk Based Guideline Value for benzo(a)pyrene (0.41 mg/kg) is used as the cleanup objective for benzo(g,h,i)perylene because there is no guideline or background value for benzo(g,h,i)perylene and the benzo(a)pyrene guideline value is the most conservative of any of the Polynuclear Aromatic Hydrocarbon (PAH) compounds.

The **Work Plan** for Contingent Removal Actions[3], supplemented by the Unique Work Package, includes procedures, instructions, and applicable permits and notifications required to safely conduct the work. Erosion and runon/runoff controls will be managed per the SWP3[4].

The RA will consist of demolition of the remaining structure and removal of contaminated soil within the building footprint. Post-excavation sampling will be performed within the excavation per the Core Team-approved **Verification Sampling & Analysis Plan (VSAP)**.

Schedule. This Fact Sheet will be in public review for 30 days, ending May 26, 2004. The RA may be ongoing during the review time. A summary of the RA & the verification data will be included in the On-Scene Coordinator (OSC) Report. The OSC Report will be placed in the public reading room after the conclusion of the verification sampling and approval by the Core Team.

Excavation & verification are expected to cost less than $50,000.

Additional information can be found in the public reading room, or by contacting Danny Punch at 847-8350 ext 301.

1: Action Memorandum/Engineering Evaluation/Cost Analysis, Contingent Removal Action for Contaminated Soil, June 2002, Final
2: PRS 17 Package, Final, February 1997
3: Standard Work Package for Contingent Removal Actions, November 2001, Final
4: Storm Water Pollution Prevention Plan

B/2

PUBLIC FACT SHEET

PRS 17: Building 34 Oil Burn Structure

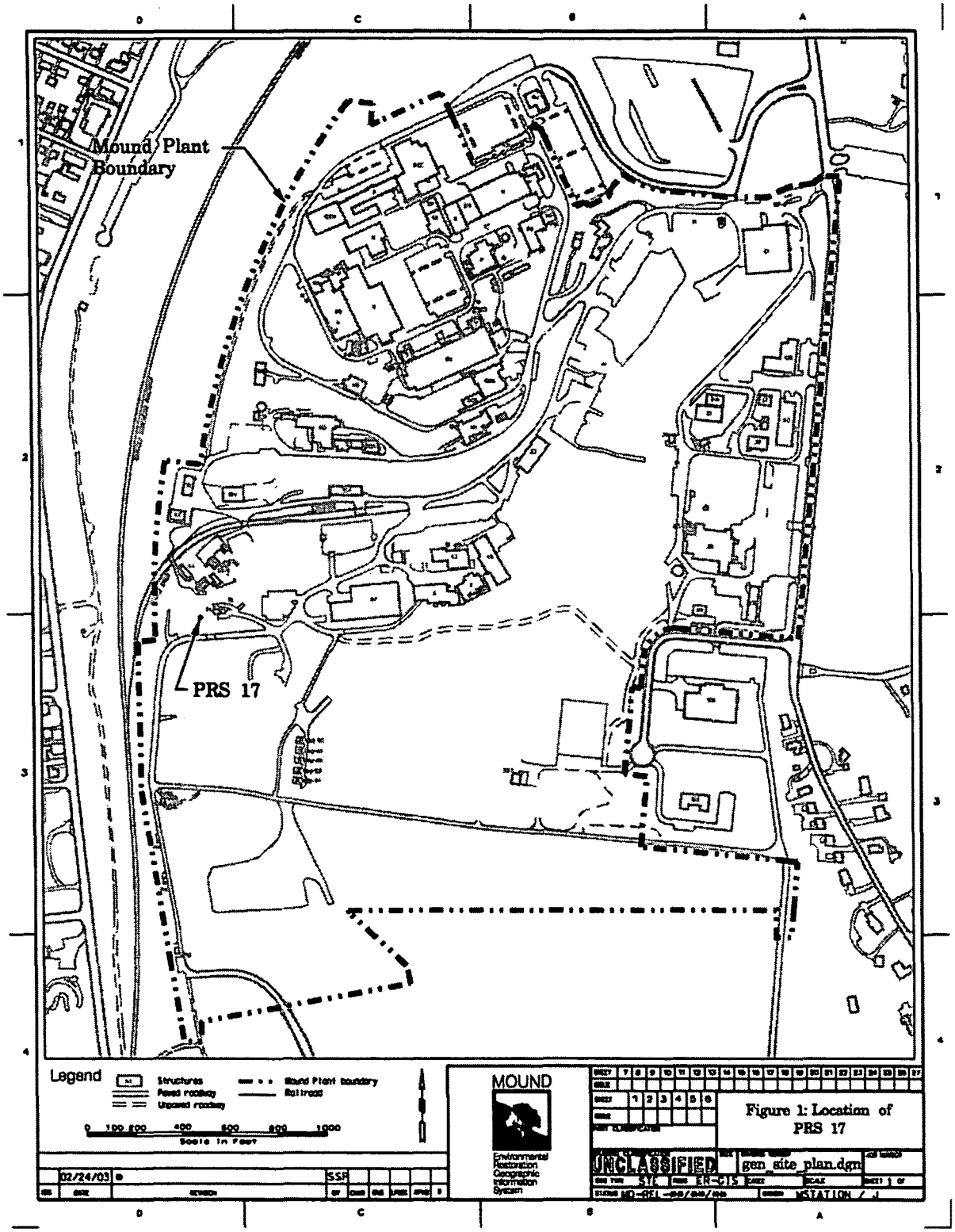

1: Action Memorandum/Engineering Evaluation/Cost Analysis, Contingent Removal Action for Contaminated Soil, June 2002, Final
2: PRS 17 Package, Final, February 1997
3: Standard Work Package for Contingent Removal Actions, November 2001, Final
4: Storm Water Pollution Prevention Plan

B2/2

ATTACHMENT C

PHOTOGRAPH DOCUMENTATION

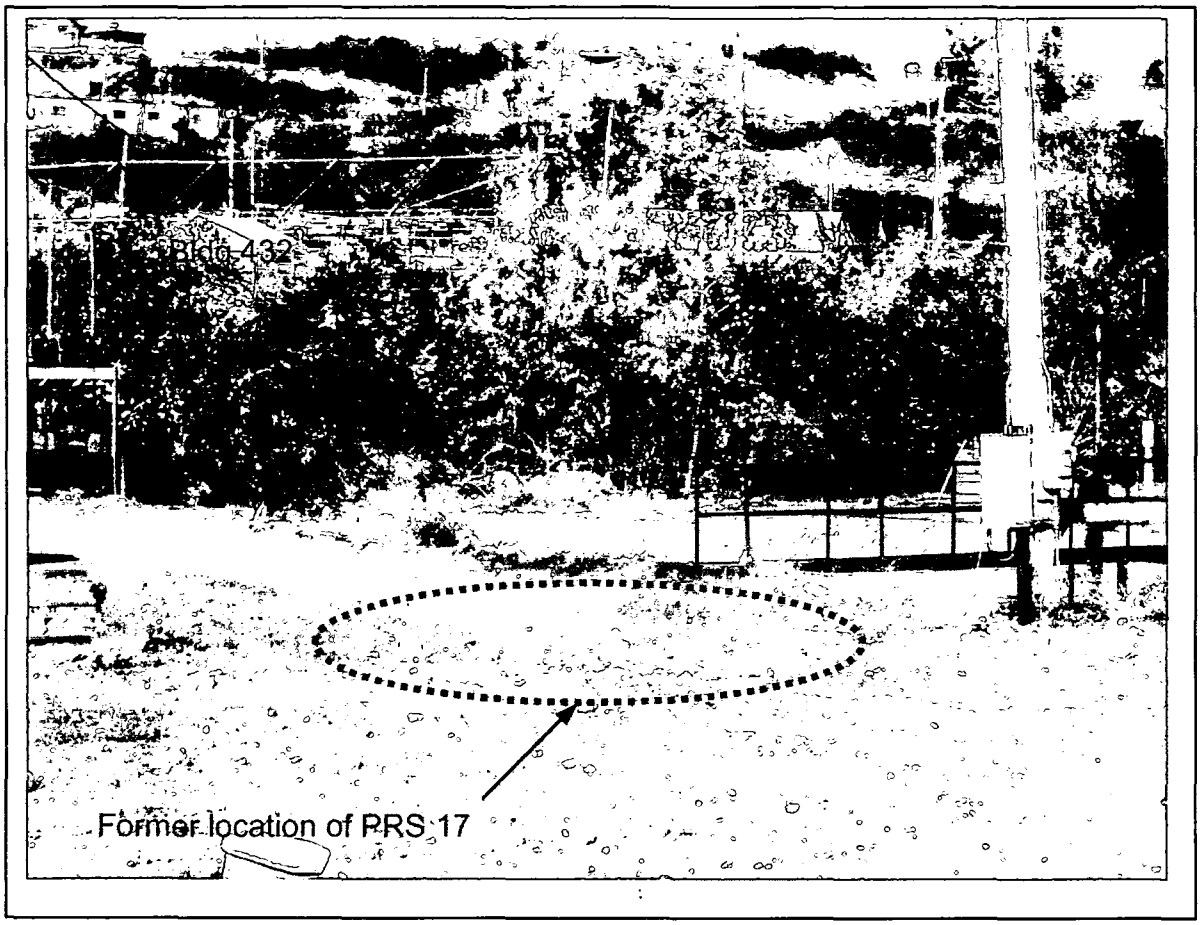

PRS 17: facing northeast,
following removal, verification, & restoration