2006 040609003

BWX Technologies, Inc.
a McDermott company

BWXT of Ohio, Inc.
1 Mound Road
P.O. Box 3030
Miamisburg, Ohio 45343-3030
(937) 865-4020

SM-132/02
October 22, 2002

Mr. Richard B. Provencher, Director
Miamisburg Closure Project
U. S. Department of Energy
P. O. Box 66
Miamisburg, OH 45343-0066

ATTENTION: Robert S. Rothman

SUBJECT: Contract No. DE-AC24-97OH20044
Building 110 Closeout Report, Final

REFERENCE: Statement of Work Requirement C.7.1e - Regulator Reports

Dear Mr. Provencher:

Rob Rothman from your office has approved the release of the following final document to the regulators and the public:

- Closeout Report – Building 110, Final

If you or members of your staff have any questions regarding the document, or if additional support is needed, please contact Bob Ransbottom at extension 4220.

Sincerely,

C. D. Thompson
SMPP/TFV Project Manager

CDT/VKD:jdg

Enclosures

cc: Tim Fischer, USEPA, (1) w/attachments
Brian Nickel, OEPA, (1) w/attachments
Ruth Vandegrift, ODH, (1) w/attachments
Frank Schmaltz, DOE/MCP, (1) w/attachments
Randy Tormey, DOE/OH, (1) w/attachments
Terry Tracy, DOE/HQ, (1) w/attachments
J. D. Bonfiglio, MESH, (1) w/attachments
Bob Ransbottom, BWXT of Ohio, (1) w/attachments
Val Darnell, BWXT of Ohio, (1) w/attachments
Budd Thompson, BWXT of Ohio, (2) w/attachments
Public Reading Room, (4) w/attachments
DCC

MOUND

Environmental Restoration Program

OhioEPA

MIAMISBURG CLOSURE PROJECT
Closeout Report
Building 110

Final
October 2002

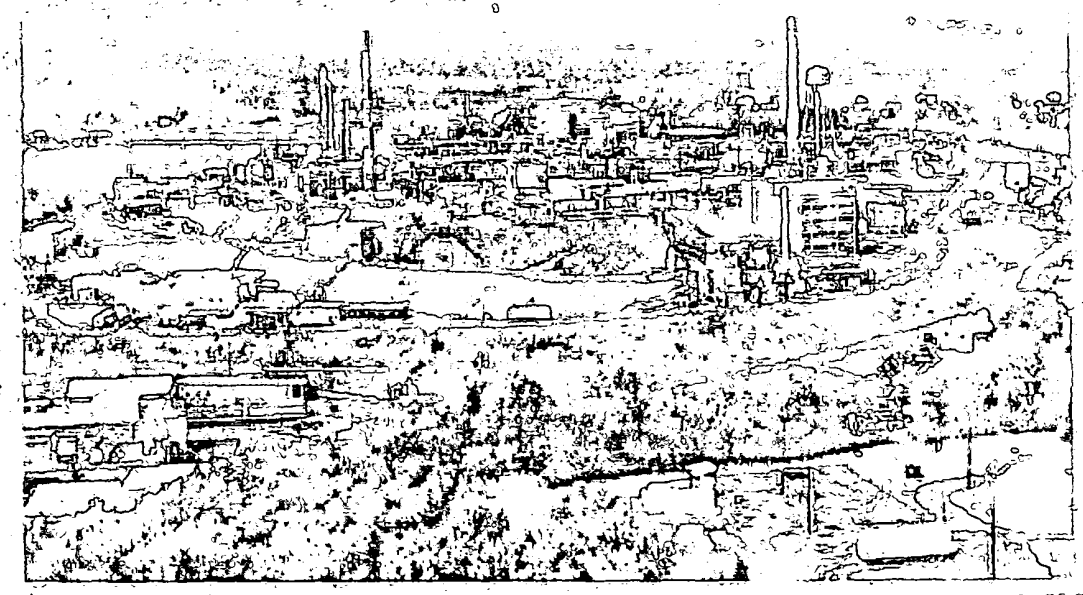

Closeout Report

Building 110

Prepared for:

United States Department of Energy
Miamisburg Closure Project
P.O. Box 3020
Miamisburg, Ohio 45343-3020

Prepared by:

BWXT of Ohio, Inc.

TABLE OF CONTENTS

Section Page

1.0 Purpose 1
2.0 Background 1
3.0 Actions Taken 1
4.0 Problems Encountered 3
5.0 Resources Committed 3

Tables

Table 1: PRSs in Proximity to Building 110 2
Table 2: Materials Disposition 3
Table 3: Personnel Organization for the Demolition 3
Table 4: Total Cost 4

Appendices

Appendix A Figures
Figure 1: Location of Building 110
Figure 2: Building 110 and Vicinity
Figure 3: Area of Building 110
Figure 4 and 4a: Building 110 – Before, During, and After Demolition

Appendix B Work Package

Appendix C Radiological Summary

1.0 PURPOSE

This is the final report documenting completion of the demolition of the Building 110 facility that was located at the DOE Miamisburg Closure Project (MCP) Site, as shown in Figures 1 and 3 (Appendix A). The fuel tank facility and its associated structures were demolished per the Work Package for Building 110 Demolition (dated September 17, 2002), which is included in Appendix B. The scope of work relating to this building is considered complete.

2.0 BACKGROUND

Building 110 was the fuel facility that had been located in the upper portion of the Test Fire Valley between the Main Hill and the Special Metallurgical/Plutonium Processing (SM/PP) Hill (Figure 3), between Building 51 and the Brickmaker (both recently demolished). Built in 1988, the facility included two above ground fuel tanks (a 6,000-gallon gasoline tank and a 4,000-gallon diesel fuel tank), two filling station-type gas pumps, and an oil/water separator. The facility served to supply fuel to plant vehicles and emergency power diesel engines.

Services to the facility were terminated prior to demolition. No waste was stored at the Building 110 facility.

3.0 ACTIONS TAKEN

The Building 110 demolition did not require a Building Data Package as it was considered personal property. This Closeout Report documents the completion of the removal of the fuel tanks, concrete dike, gasoline pumps, bollards, and oil/water separator. Two vertical concrete retaining walls (one that parallel the roadway and one that previously supported the southern edge of the fuel tank dike) were left in place to prevent shifting of the soil and construction fill material in order to protect the adjacent road from possible damage. The Environmental Restoration (ER) group will remove these two retaining walls as part of the PRS 66 Removal Action.

There are six Potential Release Sites (PRSs) in the vicinity of Building 110, as listed on Table 1 and shown on Figure 2. PRSs 38, 39, 40, and 398 will be included in the PRS 66 Removal Action and addressed by the ER group. PRS 397 will be addressed separately by the ER group.

Table 1 - PRSs in Proximity to Building 110

PRS	CERCLA or Bldg. Related	Binning Status	Comments
38	Building	Unbinned	Building 51 Waste Incinerator, removed on May 22, 1979. Will be addressed with PRS 66 Removal Action.
39	Building	Unbinned	Building 51 Waste Scrubber, removed on May 22, 1979. Will be addressed with PRS 66 Removal Action.
40	CERCLA	Removal Action (RA)	Area 7, thorium and polonium wastes. Will be addressed with PRS 66 Removal Action.
66	CERCLA	RA	Will be addressed as a Removal Action by the ER group.
397	CERCLA	Further Assessment (FA)	Elevated Soil Gas Location. Will be addressed by the ER group.
398	CERCLA	FA	Elevated Soil Gas Location. Will be addressed with PRS 66 Removal Action.

The Building 110 facility was radiologically surveyed before and after demolition. All radiological sampling results were below applicable surface release criteria. Supporting documentation is provided in Appendix C.

All preparation and demolition activities were performed in accordance with a detailed Work Plan (Appendix B) to perform safe shutdown of utilities, maintain site access control, and perform demolition and debris removal. The oil/water separator was cleaned out on May 3, 2002, and the fuel tanks and pumps were drained on September 26, 2002.

Demolition was completed on September 30, 2002. Photographs taken before, during, and after demolition are provided in Figures 4 and 4a.

Demolition material was dispositioned as noted in Table 2.

Table 2 - Materials Disposition

Material	Quantity	Method	Location
Construction Debris (metal)	120 cubic yards	Landfill	Stoney Hill
Clean Hard Fill Debris (concrete)	61 cubic yards	Reused	Spoils Area/ Concrete Crusher
Fuel-Contaminated PPE (Residue from the Fuel Tanks)	81 cubic feet	Truck	Clean Harbor Environmental

4.0 PROBLEMS ENCOUNTERED

Building 110 was successfully demolished per the Work Package.

5.0 RESOURCES COMMITTED

Table 3 lists the personnel organization for the demolition. Table 4 provides a summary of the total cost.

Table 3 - Personnel Organization for the Demolition

Agency or Party Involved	Contact	Description of Participation
US EPA HSRM-6J 77 W. Jackson Chicago, IL 60604 312-886-5787	Tim Fischer	Federal agency responsible for Miamisburg Closure Project Plant oversight.
Ohio EPA 410 E. Fifth Street Dayton, OH 45402-2911 937-285-6468	Brian Nickel	State agency responsible for Miamisburg Closure Project Plant oversight.
DOE/ Miamisburg Closure Project P.O. Box 66 1 Mound Road Miamisburg, OH 45343-0066 937-865-3620	Frank Schmaltz	DOE/ Miamisburg Closure Project, Project Manager responsible for project oversight and success.

Table 3 - Personnel Organization for the Demolition

Agency or Party Involved	Contact	Description of Participation
BWXT of Ohio, Inc. SMPP/TFV P.O. Box 3030 1 Mound Road Miamisburg, OH 45343-3030 937-865-4071	Budd Thompson	Provided the DOE/Miamisburg Closure Project, Project Manager with technical assistance, administrative support, sampling, decontamination, photo and site documentation, site safety, and report preparation.
BWXT of Ohio, Inc. General Superintendent and Equipment Manager P.O. Box 3030 1 Mound Road Miamisburg, OH 45343-3030 937-865-4071	Budd Thompson	Provided the personnel and equipment necessary for the demolition.

Table 4 - Total Cost

Summary Activity	Cost
Work Planning	$ 13,000
Safe Shutdown	23,000
Characterization	2,000
Decontamination and Demolition	16,000
Hauling and Disposal	3,917
Total Cost	**$ 57,917**

Appendix A

Figures

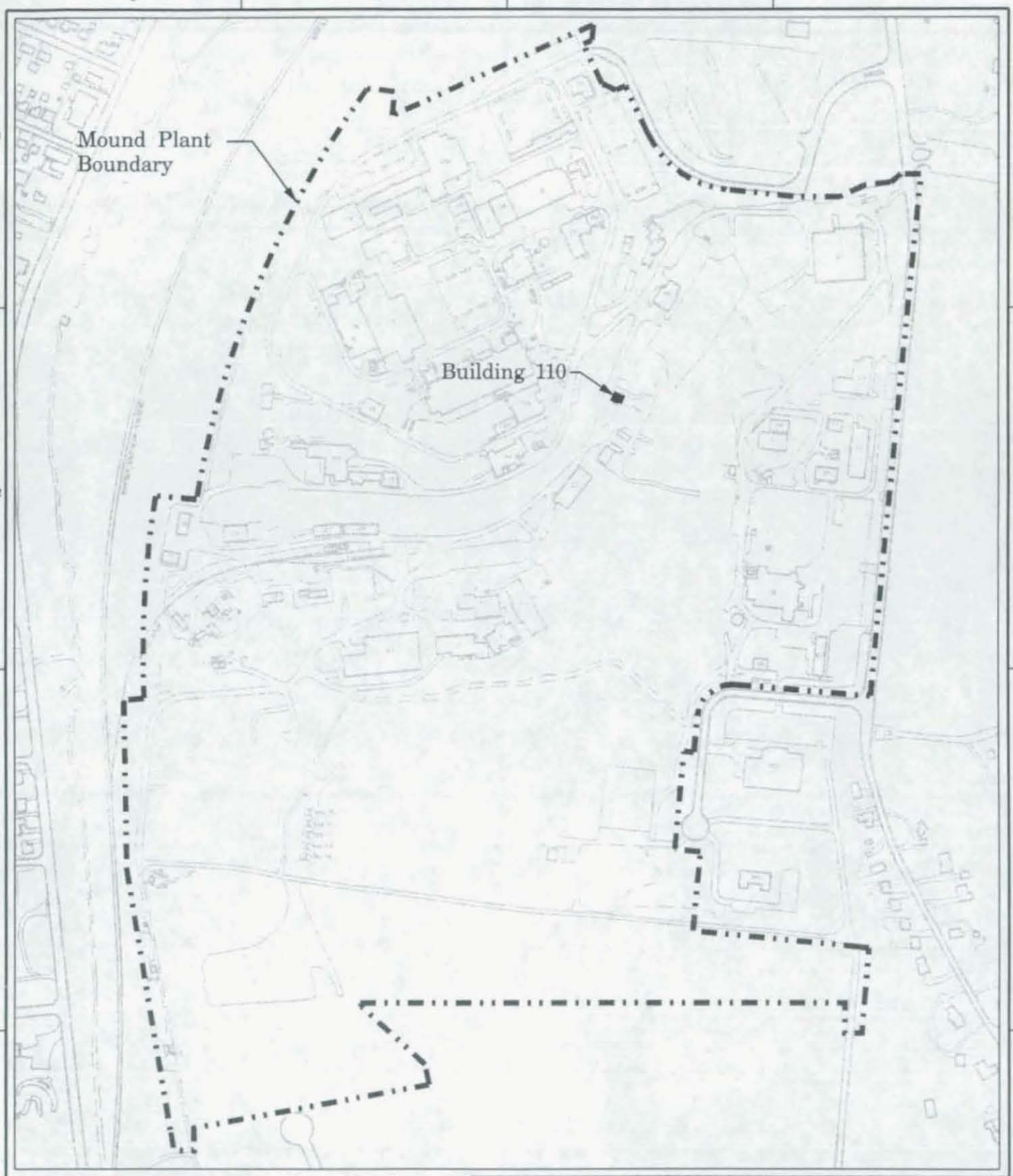

Legend

Structures
Paved roadway
Unpaved roadway
Mound Plant boundary
Railroad

0 100 200 400 600 800 1000
Scale in Feet

ISS	DATE	REVISION	BY	CHKD	ENG	LPMEC	APVD	R
	07/22/02	*	SSP					

MOUND
Environmental Restoration Geographic Information System

SHEET	7	8	9	10	11	12	13	14	15	16	17	18	19	20	21	22	23	24	25	26	27
ISSUE																					

SHEET	1	2	3	4	5	6
ISSUE						

PART CLASSIFICATION

Figure 1
Location of Building 110

DRAWING CLASSIFICATION: UNCLASSIFIED
SIZE
DRAWING NUMBER: gen_site_plan.dgn
JOB NUMBER
DWG TYPE: STE
PRNG: ER-GIS
GAGE
SCALE
SHEET 1 OF
STATUS: MO-REL-##/##/##
ORIGIN: MSTATION / J

PRS Point
PRS Area
PRS Line

ISS	DATE	REVISION	BY	CHKR	ENG	UPMC	APVD	V
	07/15/02		SSR					

MOUND
Environmental Restoration Geographic Information System

SHEET 7 8 9 10 11 12 13 14 15 16 17 18 19 20 21 22 23 24 25 26 27	
ISSUE	
SHEET 1 2 3 4 5 6	Figure 2 Building 110 and Vicinity
ISSUE ⊗	
PART CLASSIFICATION	
DRAWING CLASSIFICATION: UNCLASSIFIED	SIZE / DRAWING NUMBER: vicinity.dgn / JOB NUMBER
DWG TYPE STE / PRNG ER-GIS	CADD / SCALE / SHEET 1 OF
STATUS MD-REL-⊗⊗/⊗⊗/⊗⊗	ORIGIN MSTATION / J

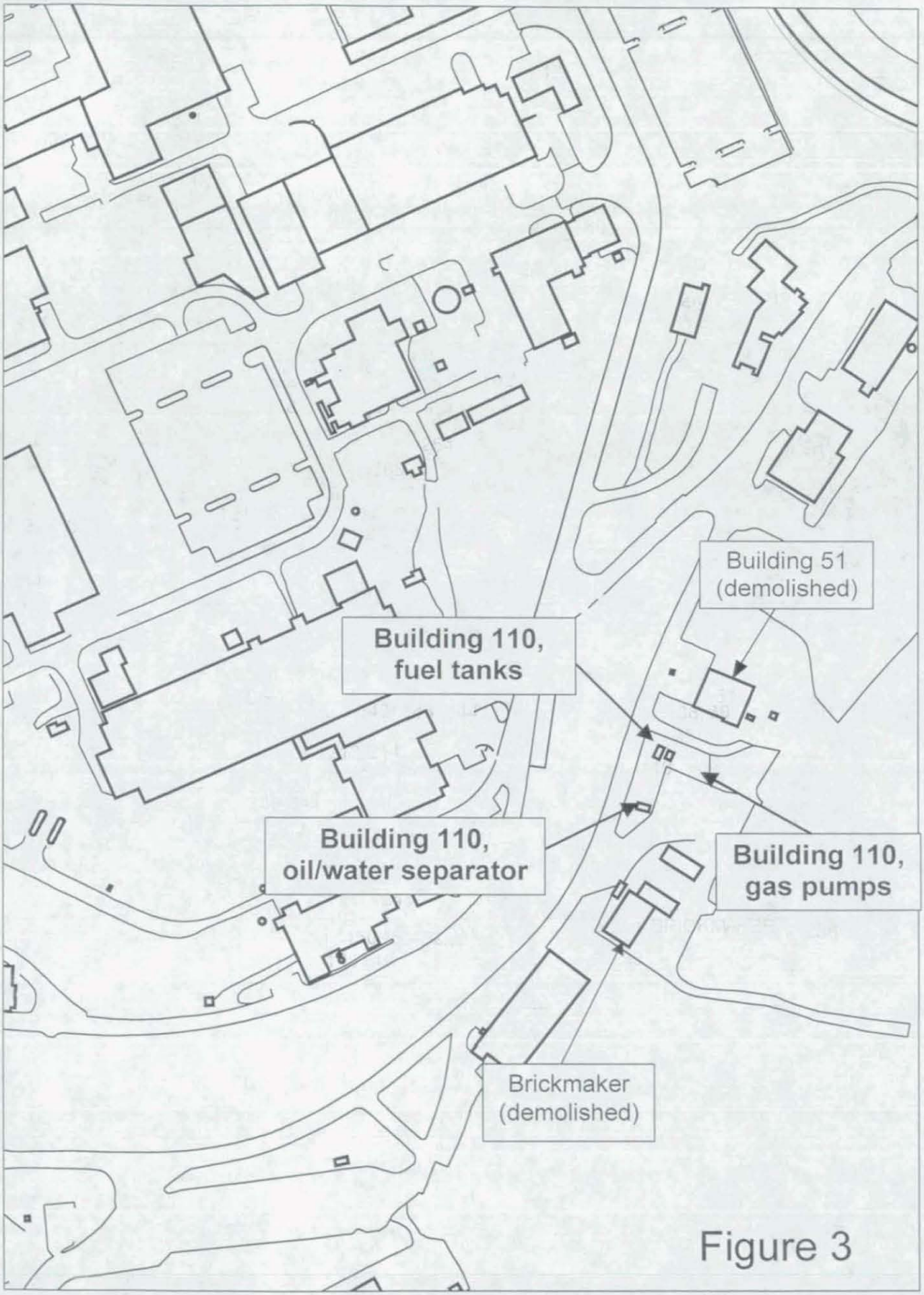
Building 51
(demolished)
Building 110,
fuel tanks
Building 110,
oil/water separator
Building 110,
gas pumps
Brickmaker
(demolished)

Figure 3

Figure 4:
Building 110

Tanks, Pumps, and
Oil/Water Separator

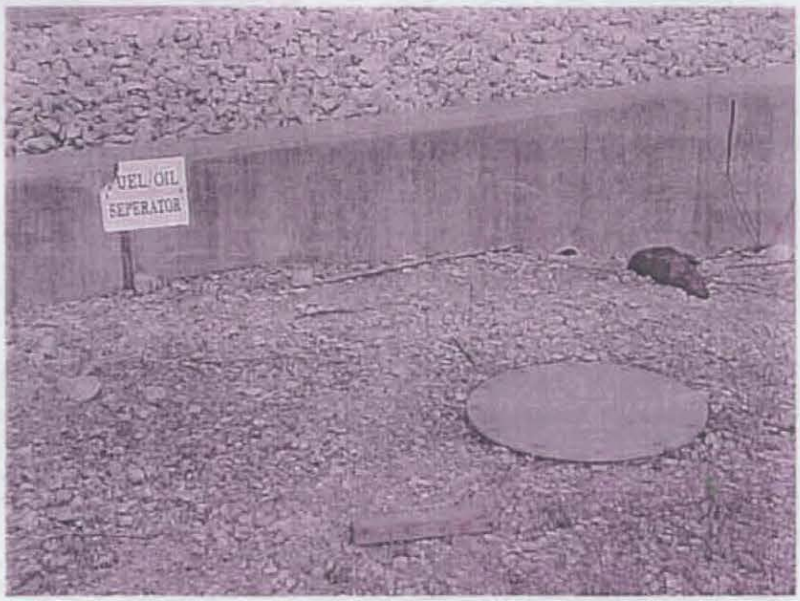

Figure 4a:
Building 110

During and After Demolition

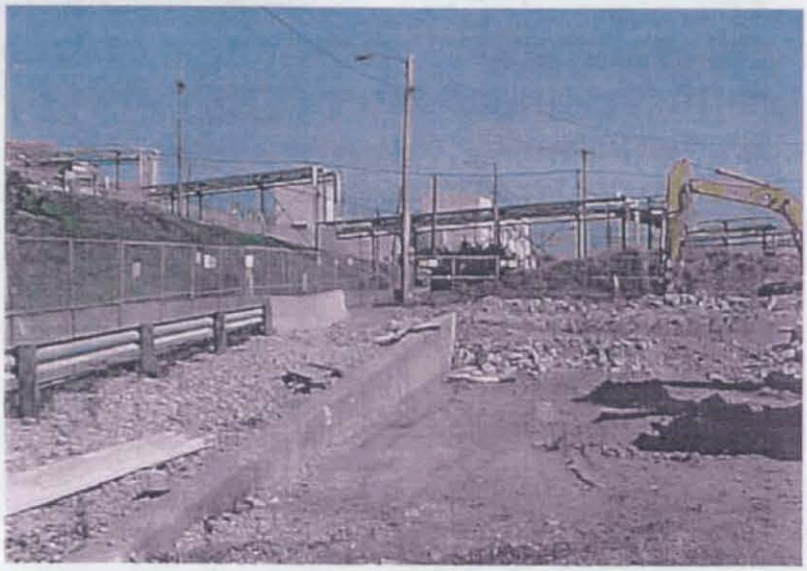

Appendix B

Work Package

Aboveground Storage Tank Removal Permit

BWXT of OHIO, Inc.

1. WORK PACKAGE TITLE: Aboveground Tank Removal Permit

2. WORK PACKAGE NUMBER. SMPP/TFV-*30040 B - 00*

3. WORK PACKAGE SCOPE:

Provide Data Required for Permission to Remove Building 110 Aboveground Storage Tanks.

Tank Removal Details provided in attached Drawings & Demolition Work Plan

4. WORK LOCATION:

BWXT of Ohio, Inc. Miamisburg, Ohio: Building 110 _____

5. WORK PACKAGE PHASES:

N/A

6. SPECIAL MATERIALS AND EQUIPMENT:

1. N/A

7. DETAILED PERMIT DATA PACKAGE:

1.0 Drawing/Specification 311001-01008, attached: Drawn to scale indicating location & size of aboveground tank storage system.

2.0 Work Pacakge Number SMPP/TFV – 30040 – 01, attached: Provides method to be utilized to remove the tank in a safe manner including actions to be taken in the event of soil contamination (chemical) that will be provided, disposal of tank and associated piping in an Ohio EPA approved manner, and instructions to control sources of ignition during the removal of the tank.

3.0 The tanks will not be abandoned in place.

4.0 Authority Having Jurisdiction will be notified and on-site during the removal to monitor procedures & confirm the tank removal has been completed in an approved manner.

9. PERMIT SIGNATURES:

APPLICANT SIGNATURE: J Boston Date: 9/16/02 Phone: 3262

PERMIT ISSUED BY : Kimberly M Torney Date 9/17/02 Phone: 3686

Authority Having Jurisdiction

Work Package /Preliminary Hazard Analysis

~ Office Master Copy (Original Approval Signatures) ~ Field Working Copy (Original Field Sign -Offs) ~ Review Copy [Note: Mark this section in color] ~ Other Copy

Note: The Project Engineer is responsible for completing Sections 1 through 10.

1. WORK PACKAGE TITLE: Demolition of Building 110 – Fuel Tank Facility

2. WORK PACKAGE NUMBER: SMPP/TFV – 30040 – ~~00~~ 01 Added - Addendum #1 Skill of the Craft Work Plan

3. WORK PACKAGE SCOPE: Empty & Remove Fuel Facility Tanks , Pumps, & Lines. Demolish and Remove Electrical Utilities, Fuel Tank Dike, Crossover Walkway, Oil - Water Separator, Bollards, and Pump Pad .

4. WORK LOCATION:

Building #110 - Fuel Tank Facility

5. WORK PACKAGE PHASES:

1. Empty, Flush & Purge Gasoline & Diesel Fuel Tanks, Lines, & Pumps
2. Disconnect & Verify Electric Utilities Disconnection
3. Disconnect & Remove Gasoline & Diesel Fuel Pumps
4. Detach Gasoline & Diesel Fuel Tanks from Lines & Cradle
5. Remove & Dispose of Gasoline & Diesel Fuel Tanks and Crossover Walkway
6. Demolish & Remove Fuel Tank Dike, Pump Pad, , Oil/Water Separator, and Bollards

Note: Insert the Work Package phases for the job. A phase is a separately definable portion or evolution of the project.

6. SPECIAL MATERIALS AND EQUIPMENT:

1. Crane
2. Gasoline & Diesel Fuel Transfer Tanks

Note: Insert any materials that require long lead procurement or special order. Don't list common items such as PPE.

7. DETAILED WORK STEPS:

NOTE: Coordinate the emptying of the tanks with the startup of the new fuel facility

1.0 Empty, Purge & Flush Gasoline & Diesel Fuel Tanks, Lines, & Pumps

1.1 Pump remaining gasoline into transfer container and supply to alternate storage tanks, as necessary

1.2 Pump remaining diesel fuel into transfer container and supply to alternate storage tanks, as necessary

1.3 Flush gasoline and diesel tanks, lines, & pumps with water to ensure residual flammable material is removed. Capture contaminated water for proper disposal.

1.4 Purge gasoline and diesel tanks, lines & pumps with inert gas to ensure no flammable vapors exist in tanks or lines.

HOLD POINT: Obtain Industrial Hygiene, air monitoring for residual flammable vapors, approval before continuing

Approval to Proceed _____ Date/Time_____

Industrial Hygiene Signature

1.5 Puncture, utilizing heavy duty equipment, several holes into various locations in tanks to ensure and demonstrate complete & final drainage.

B 3 of 44

2.0 Disconnect & Verify Electric Utilities Disconnection and Plug Drain Line

2.1 Disconnect & pullback electrical power to electrical services pole – Utilize LOTO as needed

2.2 Verify electrical power has been disconnected

Verifier Signature _____ Date_____

2.3 Install test plug in drain line at Manhole #10. Utilize Confined Space Entry Permit as needed.

3.0 Disconnect & Remove Gasoline & Diesel Fuel Pumps

3.1 Disconnect gasoline pump from lines & pad and remove

3.2 Disconnect diesel fuel pump from lines & pad and remove

4.0 Detach Gasoline & Diesel Fuel Tanks from Lines & Cradle

CAUTION

No cutting or welding torches are permitted on this project

Hazards associated with Residual Flammable Gases are Too Great

4.1 Detach gasoline tank from all exterior lines & cradle

4.2 Detach diesel fuel tank from all exterior lines & cradle

5.0 Remove & Dispose of Gasoline & Diesel Fuel Tanks and Crossover Walkway

5.1 Detach and remove the crossover walkway for disposal

5.2 Securely attach the lifting sling to gasoline tank at the attachment points – Utilize Hoisting & Rigging Permit

5.3 Lift tank into rolloff for disposal

5.4 Securely attach the lifting sling to diesel fuel tank at the attachment points – Utilize Hoisting & Rigging Permit

5.5 Lift tank into rolloff for disposal

6.0 Demolish & Remove Fuel Tank Dike, Pump Pad, , Oil - Water Separator, and Bollards

6.1 Demolish & remove fuel tank dike, pump pad, and bollards. Flip concrete pad during demolition to permit RCT survey the underside prior to disposal. Utilize Excavation Permit as needed.

CAUTION

Protect the three Monitoring Wells with Barricades to prevent Damage

NOTE: Abandon in Place underground drain lines to Oil/Water Separator near Monitoring Wells

6.2 Demolish & remove concrete oil-water separator. – RCT coverage required for sampling and survey of concrete before back filling and disposal. Utilize Excavation Permit as needed.

6.3 Dispose of all demolition materials in container supplied by Waste Management POC

6.4 Backfill excavations with rock as needed and rough grade.

Note: Insert the activities to be performed during the job. Describe the specific methods of accomplishing these activities and appropriate level of detail based on the complexity, hazard, and skill of the craft. Activities listed must be grouped under the Work Package phases listed in item 5.

Work Package /Preliminary Hazard Analysis (Continued)

8.COMMENTS: All tasks are Skill of the Craft Work

Be aware of threatening weather and take shelter when threating weather storms are imminent

Note: Comments, to identify activities/hazards that are common to multiple phases of the project (example: Wear leather gloves when handling cut pipe). Identification of these items will facilitate the addressing the items once in the pre-job briefing.

9. REVIEW SIGNATURES:

Written by: J.J. Boston — Date: 5/17/02 Phone: 3262

Job Supervisor: B Wahler — Date: 5/30/02 Phone: 3663

Superintendent/Foreman: [illegible] — Date: 05/17/02 Phone: 3866

Industrial Safety & Hygiene: [illegible] — Date: 5/17/02 Phone: 470-0220 or 4096

Rad. Controls: [illegible] — Date: 5/17/02 Phone: 3178

ES&C: [illegible] — Date: 6/3/02 Phone: 4080

Waste Mgmt: [illegible] — Date: 5/17/02 Phone: x3822

Bldg. Mgmt: Gary L. Weidenbach — Date: 6/4/02 Phone: 3241

Classification: N/A [illegible] — Date: / / Phone:

Other: — Date: / / Phone:

Note: Project Manager has the authority to N/A signatures if review is not applicable.

10. USQ SCREEN / DETERMINATION REQUIRED? ☐YES X NO

_____Not a Nuclear or Radiological Facility

USQ Trained Person: J.J. Boston — Date: 5/17/02 Phone: 3262

11. AUTHORIZATION SIGNATURE:

Project Manager: [illegible] — Date: 06/04/02 Phone: 2487

12. WORK PACKAGE CLOSURE:

Job Supervisor: — Date: / / Phone:

Project Manager: — Date: / / Phone:

RETURN PHA TO IS&H AT JOB COMPLETION.

APPROVAL CONTINUATION SHEET

Reviews:

Name	Signature	Date	Department
Jim Thomas	[illegible]	5-31-02	HD.

Reference Drawings	Rev.	Reference Procedures	Rev.

MSR # : 30040 | *Babcock and Wilcox of Ohi - Maintenance Service Request* | Date Printed: 06/04/2002

Charge # : F00984 | Area assigned t SMPPTF | Awaiting action by WEIDENBACH | Date called in : 03/19/200

Bldg/Room 110 | Equipment # GENBUILDING | RWP # : | Priority:

PERFORM DEMOLITION/110 Requestor : WEIDENBACH 4228 3241

Building Manager / Core Team Review Notes :

BM Review	Description	
POCISH	CONTACT IS&H POINT OF CONTACT PRIOR TO START OF WOR	
IH	INDUSTRIAL HYGIENE MONITORING REQ'D	INCLUDE DETAILS IN WORK PKG
SURVIP	IN-PROCESS SURVEYS REQUIRED	
PREJOB	PREJOB REQUIRED PRIOR TO START OF WORK	
EMSPLL	EMERGENCY/SPILL PLAN REQ'D TO BE PART OF WORK PKG	
HOLD	SPECIFIC HOLD POINTS REQUIRED-INCLUDE SPECIFICS IN WO	
OUTAGE	OUTAGES REQUIRING COORDINATION, LIST DETAILS IN WOR	
POD=Y	THIS WORK MUST BE IDENTIFIED ON POD	
SIGNS	BARRACADE/DANGER SIGNS - SEE MD-10286, M10, M9	
JSHA=Y	A COMPLETED JSHA MUST BE INCLUDED WITH WORK ORDER.	
LOTO	LOTO MUST BE APPLIED (IF NOT FEASIBLE CONTACT IS&H)	
DIG	EXCAVATION/DIGGING PERMIT REQUIRED	
NOISE	NOISE HAZARD - SEE MD 10286, D9	INCLUDE PRECAUTIONS IN WORK PKG
HEAT	HEAT STRESS, SEE MD-10286, D13; INCLUDE SPECIFICS IN WOR	
HOIST	HOISTING AND RIGGING, SEE MD 10508	INCLUDE PRECAUTIONS IN WORK PKG
CONFIN	CONFINED SPACE WORK - SEE IND.HYGIENE	
USQ=N	USQ NOT REQUIRED - WORK SCOPE SCREENED OUT	

Work Planning Details:

PERFORM DEMOLITION BLDG 110 PER GARY WEIDENBACH
03/25/2002 :

The work scope of this MSR/Work Package is to be defined in the work package for the demolition of Building 110. The SMPP/TFV core team will review and approve the package, see signature sheet of the package; Gary Weidenbach
06/04/2002 :

Tradesman notes and closeout

1. Is this job complete and ready to closeout ? YES/NO (circle one) [If no, what work remains to be done ???]
2. Was advance planning and coordination of work activities adequate for this type job ? YES/NO (circle one) [If not, please explain]
3. Should a post-job review be done on this job ? YES/NO (circle one)
4. Do you have any suggestions for improvements ?

Hours spent on this job : _____ Name : B7of44 _____ Date : _____

Foreman (signature) : _____ Date : _____

RETURN SIGNED PAPERWORK TO EM/PM GROUP FOR CLOSEOUT

B 8~ 44

APPENDIX A

Preliminary Hazard Analysis (PHA)For Work Package Activities

SECTION A, INDUSTRIAL SAFETY - TO BE COMPLETED BY THE INDUSTRIAL SAFETY AND HEALTH REPRESENTATIVE
Identify engineering/administrative controls or PPE as required, keyed to the following checklist items. Insert any required and/or other special actions to be taken because of the particular hazard (i.e. lead compliance plans, confined space plans, hearing conservation programs, etc.), Including any notations for future Hazard Analyses. Additionally, identify any activities which DOE prescribed Occupational Safety and Health standards, that require protective measures be designed, inspected, or approved by a professional engineer or other competent person. (Use Section D if additional space is needed.)

Item	Exist	Work Package Phase	Comments, Controls, Methods of Compliance
Blockage of exits or means of egress	N		[EGRESS]
Blockages/obstructions (Identify)	N		
Burning, welding, hot-work (Fire Watch)	N		[BURN] no cutting torches permitted on this project
Chemical compatibility of corrosives/flammables	N		
Chemical process safety	N		
Compressed gas cylinders	N		
Confined space entry	Y	2	[CONFINE] permit as needed
Crane operations, overhead or mobile	Y	5	Hoisting/Rigging permit as needed
Critical lifts (heavy or high value loads)	N		[CLIFT]
Electrical hazards	N		[LIVEL] – all electrical power will be off during demolition
Elevated work/fall protection	N		[ELEV]
Emergency eyewash/shower available	N		[EWASH]
Emergency alarms or evacuation plans required	N		[EMERG]
Explosive/flammable atmosphere	Y	1	Industrial Hygiene will monitor gasoline & diesel fuel tanks
Explosives	N		
Fire protection system/equipment outage	N		[FIRE/EFIRE]
Fire Hazards Analysis Required of Demolition	N		[FHA/ADJA]
Flammable liquids/gases	Y	ALL	[FLAM]
Forklifts, aerial lifts or material handling equipment	Y		
Grounding of electrical equipment	Y	ALL	Utilize GFCI on all electrically operated equipment used outdoors
Hazards due to condition of facility or terrain (Identify)	N		
Hoisting and rigging	Y	5	[HOIST] – utilize permit as needed
Lighting/illumination/adequacy	N		[MLITE]

APPENDIX A

Preliminary Hazard Analysis (PHA)For Work Package Activities (Continued)

SECTION A, INDUSTRIAL SAFETY - TO BE COMPLETED BY THE SAFETY AND HEALTH REPRESENTATIVE
Identify engineering/administrative controls or PPE as required, keyed to the following checklist items. Insert any required and/or other special actions to be taken because of the particular hazard (i.e. lead compliance plans, confined space plans, hearing conservation programs, etc.), Including any notations for future Job Safety and Health Analysis(JSHA). Additionally, identify any activities which DOE prescribed Occupational Safety and Health standards that require protective measures be designed, inspected, or approved by a professional engineer or other competent person. (Use Section D if additional space is needed.)

Item	Exist	Work Package Phase	Comments, Controls, Methods of Compliance
Lockout/tagout of hazardous sources:			[LOTO/ISO]
9 Electrical	Y	2	Utilize LOTO as needed
9 Mechanical (steam, hydraulic, pneumatic)	N		
9 Interlocks	N		[ILOCK]
9 Chemical	N		
9 Radiological	N		
Machine guards	N		
Modification to Fire Wall/Door	N		[FIREWAL]
Obstruction of fire protection equipment (pull boxes, hydrants, fire department connections, control panels, fire extinguishers, etc.)	N		
Off-shift work	N		
Outages of the plant public announcement (PA) system or the emergency notification system	N		[OUTAGE]
Overhead or underground utilities (Identify)	Y	2	[UITL] – underground electrical service to pumps & drain lines for dike, pumps, & oil-water separator
Penetrations into walls, floors, etc.	N		[PENETR]
Plastic sheeting or wood framing/enclosures	N		
Powder-actuated tools	N		
Public utilities (Identify)	N		[WATER]
Repetitive work	N		[ERGO]
Structural Modification	N		[STRUCT]
Special Fire Protection Equipment Required	N		[FIREQU]
Trenching/Shoring	Y	6	[DIG] – during excavation/demolition of fuel tank dike & oil-water separator utilize excavation permit as needed
Temporary heating facilities	N		
Temporary/portable buildings or structures	N		[FACIL]

APPENDIX A

Preliminary Hazard Analysis (PHA)For Work Package Activities (Continued)

SECTION A, INDUSTRIAL SAFETY - TO BE COMPLETED BY THE SAFETY AND HEALTH REPRESENTATIVE

Identify engineering/administrative controls or PPE as required, keyed to the following checklist items. Insert any required and/or other special actions to be taken because of the particular hazard (i.e. lead compliance plans, confined space plans, hearing conservation programs, etc.), Including any notations for future Job Safety and Health Analysis(JSHA). Additionally, identify any activities which DOE prescribed Occupational Safety and Health standards that require protective measures be designed, inspected, or approved by a professional engineer or other competent person. (Use Section D if additional space is needed.)

Temporary service hook-ups (Identify)	N		
Traffic control/flagman	Y		[TRAFIC] – as needed
Work in attics, ceilings, chases, or crawlspaces	N		
Work impacting adjacent normally occupied areas	N		[ADJAC/BMAPP/SIGNS/NOTIF]
Work Requiring Scaffolding, construction and inspection	N		[SCAFF]
Other (Specify)	N		

SECTION B, INDUSTRIAL HYGIENE - TO BE COMPLETED BY INDUSTRIAL HYGIENE REPRESENTATIVE

Identify engineering/administrative controls or PPE as required, keyed to the following checklist items. Insert any required and/or other special actions to be taken because of the particular hazard (i.e. lead compliance plans, confined space plans, hearing conservation programs, etc.), Including any notations for future Job Safety and Health Analysis (JSHA). Additionally, identify any activities which DOE prescribed Occupational Safety and Health standards that require protective measures be designed, inspected, or approved by a professional engineer or other competent person. (Use Section D if additional space is needed.)

Item	Exist	Work Package Phase	Comments, Controls, Methods of Compliance
Abrasive blast (☐ MSDS available)*	N		
Asbestos	N		[ASBEST]
Beryllium	N		
Blood-borne pathogens*	N		
Cadmium	Y		Potential in painted survaces
Carcinogens (☐ MSDS available)*	Y		[CARC] – gasoline additives
Chemicals/solvents (☐ MSDS available)*	Y		[CHEM/MSDS] – gasoline, diesel fuel, additives
Chlorofluorcarbon (CFC)	N		[CFC]
Coal, tar or asphalt products	N		
Coating/painting (☐ MSDS available)*	Y		Paint on tanks, etc.
Corrosives/acids/caustics (☐ MSDS available)*	N		

APPENDIX A

Preliminary Hazard Analysis (PHA)For Work Package Activities (Continued)

SECTION B, INDUSTRIAL HYGIENE - TO BE COMPLETED BY INDUSTRIAL HYGIENE REPRESENTATIVE

Identify engineering/administrative controls or PPE as required, keyed to the following checklist items. Insert any required and/or other special actions to be taken because of the particular hazard (i.e. lead compliance plans, confined space plans, hearing conservation programs, etc.), Including any notations for future Job Safety and Health Analysis (JSHA). Additionally, identify any activities which DOE prescribed Occupational Safety and Health standards that require protective measures be designed, inspected, or approved by a professional engineer or other competent person. (Use Section D if additional space is needed.)

Dusty operations	Y	6	[POWDER] - demolition of concrete
Hazardous Waste Operations (HAZWOPER)*	N		
High Pressure systems	N		[HIPRES]
Insulation/man-made mineral fibers (☐ MSDS available)*	N		
Lasers	N		
Lead	Y		Potential in paint
Foam in Place Operations	N		
Mercury	N		
Noise in excess of 85 dBA	Y	6	[NOISE] - demolition work
Polychlorinated biphenyls (PCBs)	N		
Removal of ceiling tiles*	N		
Spraying/generation of mists*	N		
Temperature extremes (heat or cold stress)	Y	ALL	[CRYRO/COLD/HEAT] - potential heat stressY
Ventilation or Air Monitoring requirements	Y	1	[VENTIL/IH] - ventilate tanks/ purging/air montoring
Welding, brazing, or thermal cutting operations	N		[BURN] - no cutting torches permitted on this project
Other (specify)	N		

***NOTE:** Requires a description of the materials involved which present a hazard. Identify the physical location of the MSDS.

APPENDIX A

Preliminary Hazard Analysis (PHA)For Work Package Activities (Continued)

FOR Work Packages

SECTION C, RADIOLOGICAL PROTECTION - TO BE COMPLETED BY RADIOLOGICAL CONTROLS REPRESENTATIVE
Identify engineering/administrative controls or PPE as required, keyed to the following checklist items. Insert any required and/or other special actions to be taken because of the particular hazard (i.e. RWP, ALARA Plan, etc.). Additionally, identify any activities which DOE prescribed Occupational Safety and Health standards that require protective measures be designed, inspected, or approved by a professional engineer or other competent person. (Use Section D if additional space is needed.)

Item		Exist	Work Package Phase	Comments, Controls, Methods of Compliance
Location:	Controlled Area			
	Contamination Area	N		[STP]
	High Contamination Area	N		[STP]
	Radioactive Materials Storage Area	N		
	Airborne Radioactivity Area (STP or OBT)	N		
	Radiation Area	N		
	High Radiation Area	N		
	Very High Radiation Area	N		
	Other (Specify)	N		
Activities:	Criticality Safety Concerns	N		
	Digging/Soil Removal	Y	6	[DIG] – RCT support required to sample/monitor all soils during excavation & underside of concrete before removal
	Surface destruction of radioactively contaminated materials or equipment?	N		[SURFAC]
	Welding, burning, or grinding?	N		[SURFAC]
	Hammering, chipping or scraping?	N		[SURFAC]
	Abrasive blasting?	N		[SURFAC]
	Dust-collecting equipment or systems?	N		
	Decontamination and clean-up?	Y		Only if contamination is discovered
	Rad Waste Storage and Disposal Required	Y		[RWSTOR/WASTE/CHAR] – only if contamination is discovered
	Other (Specify)	N		
Sources:	X-Ray machine/generator	N		[XRAY]
	Sealed radioactive sources	N		
	Unsealed radioactive sources	N		

APPENDIX A

Preliminary Hazard Analysis (PHA)For Work Package Activities (Continued)

SECTION C, RADIOLOGICAL PROTECTION - TO BE COMPLETED BY RADIOLOGICAL CONTROLS REPRESENTATIVE
Identify engineering/administrative controls or PPE as required, keyed to the following checklist items. Insert any required and/or other special actions to be taken because of the particular hazard (i.e. RWP, ALARA Plan, etc.). Additionally, identify any activities which DOE prescribed Occupational Safety and Health standards that require protective measures be designed, inspected, or approved by a professional engineer or other competent person. (Use Section D if additional space is needed.)

Controls:	Radiological Work Permit	N		[RWP/RWP=JS/RWP=N/R/RPGEN]
	ALARA Plan	N		[ALARA]
	Air Flow Studies	N		[AIRFLOW/CAM]
	Urinalysis program	N		
	Preliminary or in-process characterization	Y		[SURVPS/SURVIP] – during excavation sampling/monitoring required
	Anti-contamination clothing	N		
	Respiratory protection	N		[RESP]
	Needs Analysis Evaluation	N		
	Hazards Analysis	N		
	Engineering Controls	N		
	Administrative Controls	N		
	Supplemental dosimetry	N		
	Shielding	N		
	Personnel monitoring (frisking)	N		
	Other	N		

SECTION D - OTHER CONDITIONS, CONCERNS, OR SUPPLEMENTAL INFORMATION FROM SECTIONS A THROUGH C INCLUDING APPLICABLE LESSONS LEARNED:

Be aware of threatening weather and take shelter when life-threatening storms are imminent

Project/Activity:

Name:

JSHA CRITERIA CHECKLIST	YES	NO	N/A
1. Work performed with a 6 ft. or greater fall hazard, excluding portable ladders. See Item 14 for further requirements.		X	
2. Roof work requiring the use of fall protection (within 6 ft of an unprotected edge) or special fall protection procedures.		X	
3. Potential hazardous chemical exposure above action levels or permissible exposure limits (PELs), or ACGIH Threshold Limit Values (TLVs).		X	
4. Work activity in an immediately dangerous to life or health (IDLH) breathing hazard environment.		X	
5. Fire or explosion hazards. Are fire hazards beyond a Hot Work Permit? (Reference O2, MD-10286)		X	
6. Work within close proximity of live electrical than 50 volts, conductors, and/or work that requires multiple locks, multiple hazard sources, or complicated lockout/tagout circumstances. (Reference MD-10444, *Lockout/Tagout Procedure Manual*, for multiple energy lockout/tagout.)		X	
7. Any maintenance or repair of equipment under pressure where the pressure cannot be shut off and de-energized.		X	
8. Work with high or extreme exposure to ionizing or nonionizing radiation (reference MD-80036, Op 10002), noise, or heat or cold stress (reference D9, D13 & D16, MD-10286).		X	
9. Determined by an appropriate core team, building manager, member of general or executive management, or the IS&H manager to require a JSHA.	X		
10. Any onsite construction or service project directed to have JSHAs based on this procedure and/or instruction from project personnel or IS&H staff.		X	
11. Near-miss event with the potential for loss of life or limb or disabling injury/illness if repeated.		X	
12. Excessive trama/motion/vibration work situations or manual lifting involving heavy, large, and/or awkward-to-handle objects (reference MD-10407, *Ergonomics Program.*		X	
13. Unguarded, unmarked close clearance, pinch point, exposed moving machinery parts.		X	
14. Known potential falling object hazards (e.g., employees working above other employees, potential for dropping tools, falling equipment or material) or working in areas with the potential for flying objects (flying chips, sandblasting, etc.), exposure to sharp or protruding objects (e.g., working inside plenums, air mover ducts, etc.).		X	

MANDATORY JSHA REQUIRED TO ADDRESS ANY/ALL (YES) RESPONSES

B 16 of 44

JOB SAFETY & HEALTH ANALYSIS

JSHA MASTER DOCUMENT CONTROL NO:
SMPP/TFY-110-051402-00

DATE:	_X_ NEW ___ REV	BUILDING:	JOB:
5/14/2002		110	Demolition of Fuel Tank Facility

DEPARTMENT/COMPANY:	SECTION:
SMPP/TFV/BWXTO	N/A

OCCUPATIONS:
Electrician, Heavy Duty, Demo Tech, Pipe Fitter/Welder

SIGNATURES

ORIGINATOR:	J.J. Boston
REVIEW/REV:	M.M. Shaw / B.J. Weidenbach
REVIEW/REV:	Jim Wills
APPROVED:	B Marsh
APPROVED:	

REQUIRED PERSONAL PROTECTIVE EQUIPMENT:	MSDS(s)/CHEMICALS ASSOCIATED WITH THE JOB:
Safety glasses with side shields & safety shoes & hearing protection as needed	Gasoline & diesel fuel

BASIC JOB STEPS	POTENTIAL ACCIDENT/ILLNESSES OR KNOWN HAZARDS	SAFE JOB PROCEDURES
Break the job down into basic steps that tell what is done first, what is done next, and so on. Record the job steps in their normal order of occurrence. Describe what is done, not the details of how it is done. Usually, three or four words are sufficient to describe each job step. For example, the job of "replacing a light bulb" may break down into basic steps as follows: 1. Bring and set up ladder 2. Ascend ladder 3. Remove light globe & bulb 4. Replace light bulb 5. Replace light globe 6. Descend ladder 7. Remove and store ladder	Ask yourself for each job what accidents/illnesses could occur to the employee doing the job. Record potential accidents/illnesses by combining one of the abbreviations below with the agent of contact. For example, "struck by a crane hook" is recorded "SB-crane hook." Number each potential accident. SB - Struck by CB - Contacted by SA - Struck against CW - Contact with CI - Caught in CO - Caught on IB - Caught between F - Fall SO - Strain-overexertion* E - Exposure (occ. illness) *Show ergonomic stresses as SO (repetitive trauma, single event strain, or awkward position)	For each potential accident/illness, ask yourself exactly what the employee should do or not do to avoid the accident/illness. Describe specific precautions in detail. Give each precaution the same number given in the potential accident (center column) to which it applies. Avoid generalities such as "Be alert," "Be careful," and "Take caution." Use simple do or don't statements; e.g., "Lock out main power switch," "Stand clear of lift before signaling," or "Check wrench grip before exerting full force." If necessary, explain how, as well as what, to do. Amount of detail is a matter of judgment. Describe ergonomic solutions (job redesign, new tools, worker lift assistance, etc.)
General Safety Note	A wide variety of incidents occur on a regular basis that potentially could result in injury or illness	1) Be cognizant of your own safe work practices as well as those of your co-workers 2) Review any related safety procedures of which you are unsure 3) Utilize STOP WORK Authority as necessary
Pre-job meeting with involved personnel to discuss the work plan and safety requirements.	NA	This project engages in Enhanced Work Planning(EWP), a ISM process that evaluates and improves the approach by which work is identified, planned, approved, controlled, and executed.
1. Pump remaining gasoline & diesel fuel into transfer containers, flush out tanks & lines with water & purge with inert gas.	1. Potential contact with gasoline or diesel fuel	Change Clothes - wash affected area JBW
2. Disconnect electrical power to pumps	2. electrical shock	2. Utilize LOTO procedure
3. Install test plug on drain line in Manhole #10	3. Confined space hazards	3. Utilize confined space permit
4 Disconnect gasoline & diesel tanks & pumps and crossover walkway	4. none	
5. Remove gasoline & diesel tanks & pumps and crossover walkway	5. hoisting & rigging hazards	5. Utilize hoisting & rigging permit
6. Demolish fuel tank dike & pump pad	6. Noise	6.Utilize hearing protection when needed
7. Demolish Oil – Water Separator	7. Excavation hazards	7. Utilize excavation permit
Be aware of threatening weather	Possible injury from lightning strike or high winds	Be aware of threatening weather and take shelter when life-threatening conditions are imminent - JL

B18 of 44

JOB SAFETY AND HEALTH ANALYSIS FORM
(CONTINUATION SHEET)

BASIC JOB STEPS	POTENTIAL ACCIDENT/ILLNESSES OR KNOWN HAZARDS	SAFE JOB PROCEDURES

8192 44

SIGN-OFF SHEET

I have read and understand the attached Job Specific Work Plan and JSHA:

Signature	Date	Department

POST JOB CONFERENCE

What went well?

What could be improved?

Other Comments:

Items Requiring Further Action:

POST-JOB CONFERENCE ATTENDEES

NAME	HP	NAME	HP

B 24 of 44

JOB SPECIFIC WORK PLAN

Title:	DEMOLITION OF BLDG. 110 - FUEL TANK FACILITY		
Work Package No. (JSWP or MSR)	30040-01	If MSR Indicate Low, Moderate, or High Hazard ~~30040-01~~ JRK	Rev. 01

WORK PLAN REVISION SHEET

[Note: Mark this section in color]

~ Office Master Copy (Original Approval Signatures) ~ Field Working Copy (Original Field Sign -Offs) ~ Review Copy ~ Other Copy

Revision Description: (attach page revisions to form)

SEE ATTACHED ADDENDUM #1 - SKILL OF THE CRAFT PLAN FOR THE DEMOLITION OF THE FUEL TANKS BLDG. 110 MANAGEMENT REVIEW MEETING

Reviewed by:	Name	Signature	Date
Project Engineering:	LEE KOENHASTEDT Jeffrey L Boston	Lee Koenhastedt JL Boston	9/12/02 9.16.02
Project Superintendent/Foreman:	Mike Stromberg	Mike Stromberg	9/13/02
Radiological Operations:	STEVE COLLAS	S Collas	9-13-02
Industrial Safety & Hygiene:	JARED WILLIS CHRIS AHLQUIST	Jared Willis Chris Ahlquist	9-13-02 9-12-02
Waste Management:	WILLIS DANIEL	Willis Daniel	9-12-02
Environmental Safeguards & Compliance:	RON PAULICK	R Paulick	9-16-02
Building Manager:	Gary Weidenbach	GJ Weidenbach	9-16-02
Other:	R.C. HARRISON	R.C. Harrison	9/12/02

Approved by:

BWXTO Project Manager

9/17/02 — C.D. Thompson — CD Thompson

Date — Name — Signature

Concurrence by:

DOE Project Manager N/A

Date — Name — Signature

B2506 44

B26of 44

APPROVAL CONTINUATION SHEET

Reviews:

Name	Signature	Date	Department
Tom Beal	Thomas Beal	9/17/02	Fire Protection Group

Reference Drawings	Rev.	Reference Procedures	Rev.

APPROVAL CONTINUATION SHEET

Reviews:

Name	Signature	Date	Department
Charles Saunders	Charles Saunders	9-17-02	welder
Mel EVANS	Mel Evans	9-17-02	Pipefitter
Bill Kelly	Bill Kelly	9-17-02	PF
Steven Cook	Steven Cook	9-17-02	DT
Brian K. Combs	Brian K. Combs	9-17-02	DT
Patricia A. Reece	Patricia A Reece	9-17-02	DT
[illegible] E Chaney	[illegible]	9/17-02	FAB MECH.
JEFFREY W. COPLEY	Jeffrey W. Copley	9-17-02	FAB MECH.

Reference Drawings	Rev.	Reference Procedures	Rev.

Addendum #1 to the work plan

Skill of the Craft Plan

for the Demolition of the Fuel Tanks – Bldg 110

Management Review Meeting

Skill of the craft review of the Demolition of existing 110 fuel tanks

9/10/02 Craft review meeting to discuss the strategy of the demolition
Attending

Bill Wahler – Foreman
Jim Harvey – Foreman

Tim Thomas - Heavy Duty (HD)
Dave Eversole – HD

Robert Chancey – Fabrication Mechanics (FM)
Jeff Copley – FM

Mike Leis – Electrical Control (EC)
Ryan Mullins – EC

Charlie Saunders – Pipefitter (PF)

Bill Beverly – Demo. Tech. (DT)
Wilma Brinegar – DT
Pat Reece – DT
Darin Eversole – DT

9/11/02 Craft review meeting to discuss the strategy of the demolition
Attending
Bill Wahler – Foreman
Jim Harvey – Foreman
Gene Nickell – Construction Craft (CC)
Roger Poast – CC

9/12/02 Craft review meeting to discuss the strategy of the demolition
Attending
Bill Wahler – Foreman
Jim Harvey – Foreman
Mel Evans - PF

SIGN IN SHEET
TRAILER 19

Skill of The Craft Plan For Demolition of Fuel Tanks 110.

Management Review Meeting

9-11-02

ATTENDEE'S

1. Bill Wahler
2. Mike Stromberg
3. BOB RANSBOTTOM
4. CHRIS AHLQUIST
5. LEE KOEHNSTEDT
6. Jeff Boston
7. JARED WILLS
8. Jim Harvey
9. Ron Paulick
10. Willis DANIEL
11. Bob Coblentz
12. TOM BEAL

DEMOLITION CHECKLIST FOR 110 FUEL TANKS
Rev. 6

Scope:
Phase I – Fuel Tanks, Pumps, aboveground piping and support structure removal
Phase II – Underground piping, oil/water separator, concrete pad and drain removal.

Note: This checklist is for Phase I only. Phase II will follow at a later date.
In the Check column a D means the diesel tank and a G means the unleaded gasoline tank. Check each item when completed.
Steps 1 thru 4 must be completed for both tanks before completing step 5. The remaining steps may be completed for one tank and then for the other, however they must be performed in order for each tank, unless prior approval is reached from the work plan signatories.
Preparatory steps don't need to be performed in order

Check	Step No.	Description	Comment
D G	Prep. 1	Build wood platform with handrails on top of tank	Use ladder to reach platform. Have tie-off for ladder.
D G	Prep. 2	Using concrete cracker, break concrete containment wall down even with tank valve on west side of tank.	Do not take all of the way to the containment floor with fuel remaining in tank.
D G	Prep. 3	Post work zone and fence off	
D G	Prep. 4	Mark 35' no spark zone around tanks.	
D G	Prep. 5	Set-up pressure washer at least 35' from tanks	
D G	Prep. 6	Move 2000 gal. discharge tank into position.	
Note: Complete Steps 1 thru 4 for both tanks before performing Step 5			
D G	1.	Remove filters from gas pump and start to fill black 55 gal drums.	Stage drums on skid prior to filling. Label drums Flammable for gasoline and Combustible for diesel. (Note: there is approx. 1-1/2" of fuel left in the tanks which equates to 30 to 40 gal. of fuel.)
D G	2.	Pump water into tanks using fill pipe.	
D G	3	When fluid coming out of pump nozzle runs clear and appears free of fuel, stop pumping water into the tank and turn off the fuel pump	

B38.6 44

DEMOLITION CHECKLIST FOR 110 FUEL TANKS
Rev. 6

D G	4.	Close drum and install bung valve	
Note: Complete Steps 1 thru 4 for both tanks before performing Step 5			
	5.	Disconnect power from pump at the supply pole.	**Complete Steps 1 thru 4 for both tanks before performing Step 5**
D G	6.	Disconnect fill and vent tubes. Disconnect fill pipe to the 90° bend and connect adaptors for the CO_2 hose.	Drain water from fill pipe prior to disconnecting. Use containment under all disconnections.
D G	7.	Fill tank with inert gas, Carbon Dioxide (CO_2), using fill pipe	Industrial Hygiene to monitor flash arrestor looking for CO_2 discharge. When IH and Foreman agree tank is inerted turn CO_2 tank off.
HOLD POINT: Tank has been sufficiently inerted with CO2 to proceed (Diesel) Signed _____ Date: _____ (Gasoline) Signed _____ Date: _____			
D G	8.	Close discharge valve, place containment under union.	Have absorbant pads and Florco staged in area
D G	9.	Open union (liquid in line will drain out) Remove piping from union toward wall.	
D G	10.	Using a jack, raise back end of tank approx. 2-3". Put wood 2x4's in space between tank and cradle.	
D G	11.	Hook pipe/hose up to valve on tank. Run pipe/hose to 2000 gal discharge tank on ground. Open discharge valve.	Label tank as Flammable for gasoline or Combustible for diesel
D G	12.	Open CO_2 valve until CO_2 is detected at the flash arrestor, then close CO_2 valve.	
HOLD POINT: Shut adjacent roadway down to traffic and establish 35' No Spark Zone			

B40 of 44

D G	13.	Pull hatch cover off tank	**For all steps when working with open tank or lines:** • Obtain Confined Space Permit • Wear full face respirator with organic vapor cartridge. • Due to inert atmosphere, use fall restraint or a physical barrier that prevents falling into the open tank hatch • Use grounding wrist straps tied to tank. • Use non-sparking tools • Wear rubber/work gloves • Do not stick head or arms past elbows into tank. • Two man rule when working on top of tanks. • All equipment that can cause sparks to be at least 35 feet away from tanks.
D G	14.	Run hoses to tank hatch from pressure washer	
D G	15.	Have modified pressure washer wand on tank platform. Hook degreaser to pressure washer.	Ground wand to tank
D G	16.	Start washing the tank down with the black tip (low pressure adds the degreaser). Then using high pressure continue to wash the tank.	Wear ear protection when near pump Wear eye protection Keep face and upper arms out of tank.
D G	17.	After washing, have IH check tank for vapor mixture.	
D G	18.	Continue washing tank until vapor mixture is approved by IH.	

B420б 44

DEMOLITION CHECKLIST FOR 110 FUEL TANKS
Rev. 6

D G	19.	When 2000 gal. discharge tank is full, change tanks and continue to wash.	
D G	20.	Stop washing when vapor mixture is approved by IH.	
HOLD POINT: Tank has been sufficiently cleaned to proceed (Diesel) Signed _____ Date: _____ (Gasoline) Signed _____ Date: _____			
D G	21.	Hook water supply up to discharge lines between containment and fuel pump.	
D G	22.	Disconnect fuel pump from piping.	
D G	23.	Start flushing lines.	
D G	24.	When Foreman determines that the lines from the tank to the pump are sufficiently pumped, stop flushing. Cap pump suction line at asphalt and suction lines at pump.	Make certain lines are full of water before capping.
HOLD POINT: Lines have been sufficiently cleaned to proceed (Diesel) Signed _____ Date: _____ (Gasoline) Signed _____ Date: _____			
D G	25.	Disconnect all piping to tank	
D G	26.	IH to verify inert atmosphere in tank prior to proceeding to step 27.	
HOLD POINT: Tank has been sufficiently inerted with CO2 to proceed (Diesel) Signed _____ Date: _____ (Gasoline) Signed _____ Date: _____			
D G	27.	Remove nameplate and put holes in tank, using Heavy Duty equipment. Then size reduce the tanks.	Do not use torch or other open flame. Have RCT take rad surveys when tank is open.
D G	28.	Coordinate with Waste Management to: Dispose of tank sludge and remaining fuel. Take rinsate in 2000 gal discharge tanks to the drying beds.	

Appendix C

Radiological Summary

RSDSs Prior to Demolition

BUILDING 110 RADIOLOGICAL ASSESSMENT

An assessment of Building 110 (Gas Pump, Tanks & Pads) was performed, reviewing operational history, and including radiological surveys, in accordance with Multi-Agency Radiation Survey and Site Investigation Manual (MARSSIM) guidance and/or "Generic Process for the Disposition of Buildings That Have Potential or Actual Radiological Contamination."

Building 110 has no history of radioactive materials having been handled or stored in/on it. It has been used for gasoline storage and filling of gasoline and diesel powered vehicles since its construction in 1988. Radiological survey data indicate that the structure is non-impacted per MARSSIM.

TYPE	RSDS	LOCATION	SURVEY RESULTS (dpm/100 cm^2) (Note 1)	SURFACE CONTAMINATION GUIDELINES (dpm/100 cm^2) (Note 2)
Highest Alpha Smearable Activity	02-TF-0197	Building Surfaces	4.19	20
Highest Alpha Fixed Activity	02-TF-0147	Building Surfaces	84 Note 3	100
Highest Beta Smearable Activity	02-TF-0197	Building Surfaces	7.95	1,000
Highest Beta Fixed Activity	02-TF-0824	Building Surfaces	756	5,000
Highest Tritium Smearable Activity	02-TF-0197	Building Surfaces	12.73	10,000

Note 1: Radiological activity may be present and not be a concern (within applicable limits). This may result from or be a function of counting statistics, instrument variances, the randomness of decay, radon presence, and/or natural fluctuations in background levels.

Note 2: Core Team determined values.

Note 3: All alpha fixed activity survey results are below applicable contamination guidelines. Two results on RSDS 02-TF-0147 showed alpha fixed activity exceeding the 100 dpm/cm^2 contamination guideline: 141 dpm/100cm^2 and 122 dpm/100cm^2. However, those locations were resampled and found to be below the contamination guideline with results of 46 dpm/100cm^2 and 60 dpm/100cm^2. The difference between the initial and resampling results is attributed to the rapid decay process of radon/daughters.

RADIOLOGICAL SURVEY DATA SHEET

LOCATION: (BLDG./AREA/ROOM) BLDG 110	SURVEY NO. 02-TF-0147
PURPOSE: FUEL TANK AREA CONFIRMATION SURVEY	RWP NO. N/A
	DATE: 1-22-02
	TIME: 1530

MAP/DRAWING

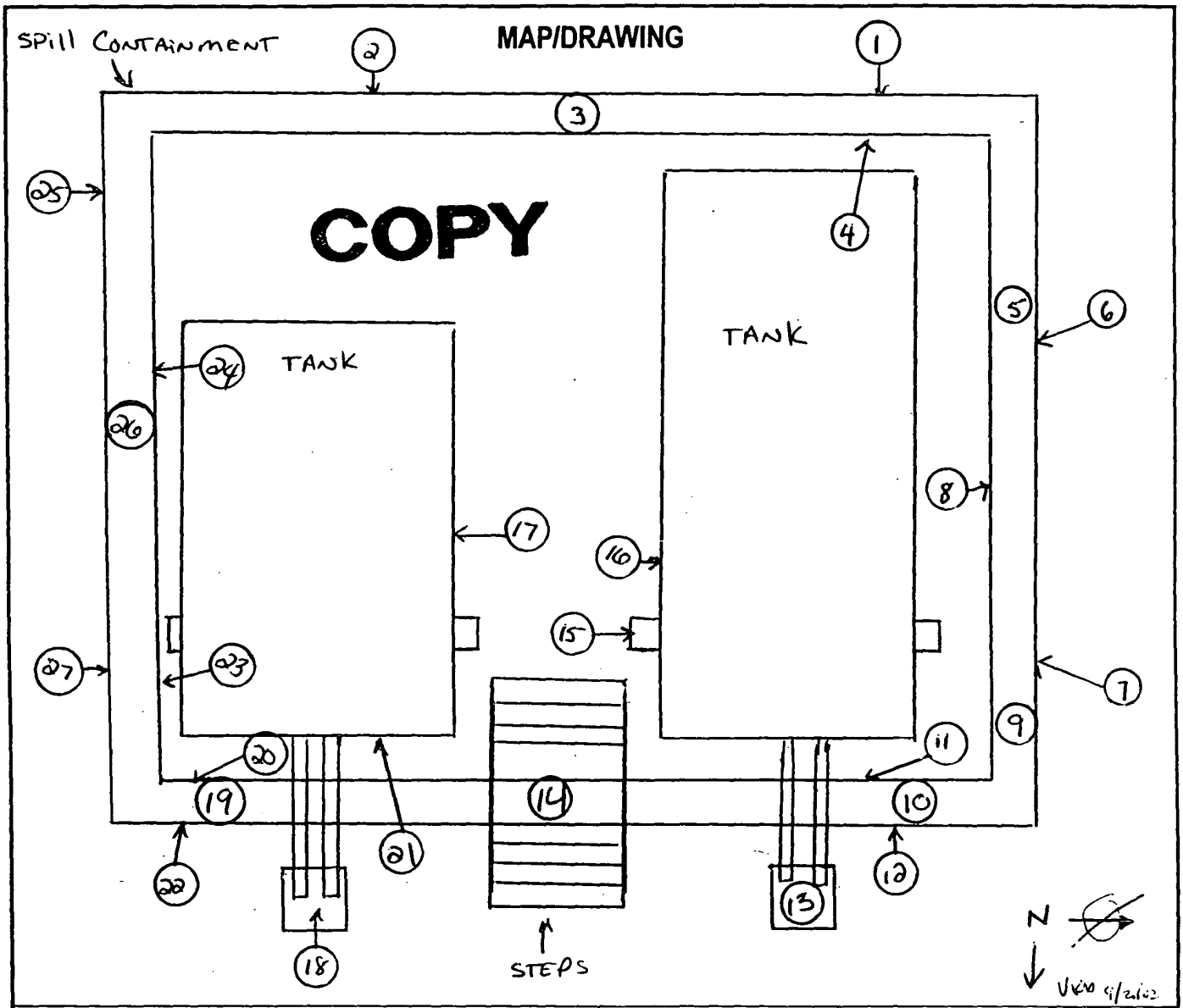

LEGEND:
= mrem/hr (γ) whole body
#E = mrem/hr (β+η+γ) extremity on contact
△# = mrem/hr neutron
[#] = air sample number
(#) = swipe number
(#/α) or/β = direct cont. measurement in dpm/100cm²

INSTRUMENTS USED

Instrument	Serial Number	Cal. Due Date
M-2350	5671/5148	9-21-02
	N/A	

Completed by: (Signature)	HP [redacted]	Date: 1-22-02
Completed by: (Print Name) DANIEL J. HARVEY MICHAEL J RUBADUE		
Counted by: (Signature) N/A	HP #	Date:
Counted by: (Print Name)		
Reviewed/Approved by: (Signature) RW Coblentz	HP # [redacted]	Date: 01/23/02
Reviewed/Approved by: (Print Name) RW Coblentz		

ML-9620 (2-98)

2 of 7

Survey No. 02-TF-0147

Page ____ of ____

RADIOLOGICAL SURVEY DATA SHEET (cont.)

Removable Contamination				
Swipes (dpm/100cm²)				
Sample #	β/γ	Alpha	Tritium	Comments

Removable Contamination				
Swipes (dpm/100cm²)				
Sample #	β/γ	Alpha	Tritium	Comments

N A

COMMENTS:

NOTES:

1. See MD-80036 10002 for calculations of WB, extremity and skin dose rates.
2. To request RO Count Room analysis for β/γ, alpha or tritium, leave column blank. Mark column N/A if not needed. If count room printout of results are attached, write "see attached" in column.
3. Annotate special sample type (e.g., soil, water), special identifiers or otherwise in Comments. If not needed, mark N/A.

ML-9620A (4-98)

C6-663

RADIOLOGICAL SURVEY DATA SHEET

3 of 7

LOCATION: (BLDG./AREA/ROOM) BLDG 110	SURVEY NO. 02-TF-0147
PURPOSE: FUEL PUMPS CONFIRMATION	RWP NO. N/A
	DATE: 1-22-02
	TIME: 1530

MAP/DRAWING

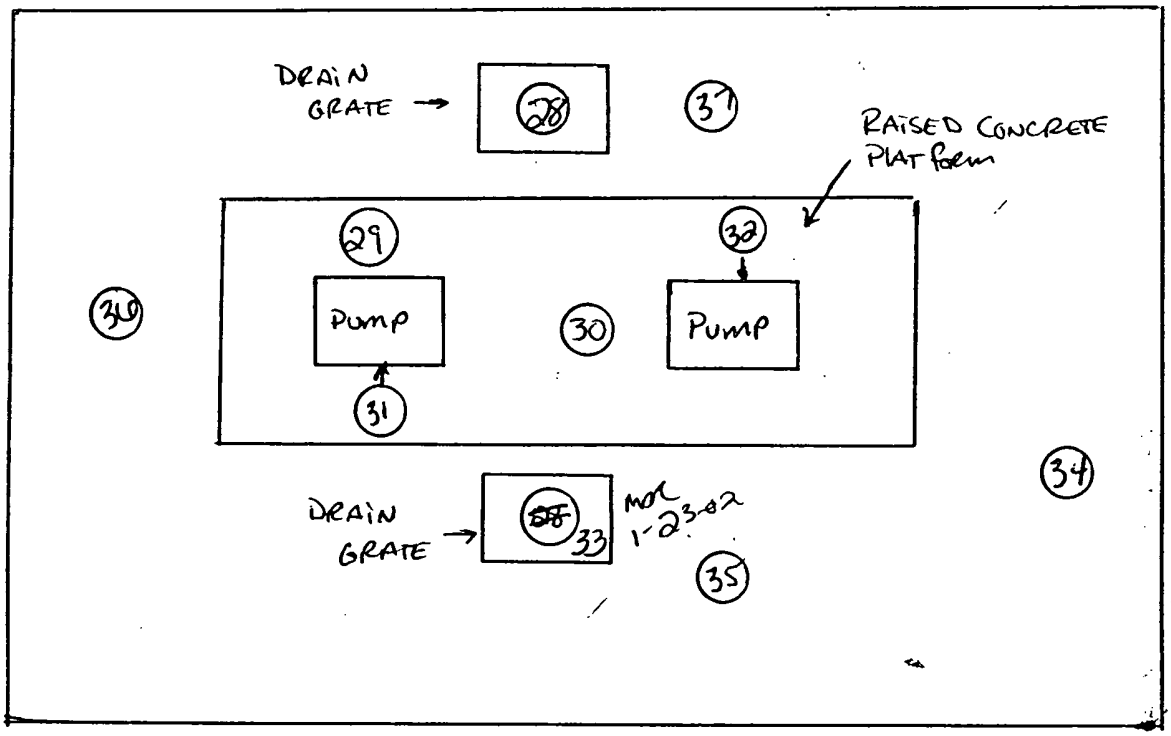

N

VKO 9/21/02

LEGEND: # = mrem/hr (γ) whole body
#E = mrem/hr (β+η+γ) extremity on contact
△# = mrem/hr neutron
[#] = air sample number
(#) = swipe number
(#/α) or/β = direct cont. measurement in dpm/100cm²

INSTRUMENTS USED

Instrument	Serial Number	Cal. Due Date
SEE	PAGE 1	

Completed by: (Signature)	HP #	Date:
Completed by: (Print Name)		
Counted by: (Signature) N A	HP #	Date:
Counted by: (Print Name)		
Reviewed/Approved by: (Signature)	HP #	Date:
Reviewed/Approved by: (Print Name)		

ML-9620 (2-98)

C7 of 63

30100

Survey No. 02-TF-0147

Page ____ of ____

RADIOLOGICAL SURVEY DATA SHEET (cont.)

Removable Contamination				
Swipes (dpm/100cm²)				
Sample #	β/γ	Alpha	Tritium	Comments

Removable Contamination				
Swipes (dpm/100cm²)				
Sample #	β/γ	Alpha	Tritium	Comments

N/A

COMMENTS:

NOTES:
1. See MD-80036 10002 for calculations of WB, extremity and skin dose rates.
2. To request RO Count Room analysis for β/γ, alpha or tritium, leave column blank. Mark column N/A if not needed. If count room printout of results are attached, write "see attached" in column.
3. Annotate special sample type (e.g., soil, water), special identifiers or otherwise in Comments. If not needed, mark N/A.

ML-9620A (4-98)

BLDG 110 M-2350 SURVEY

RSDS# 02-TF-0147 RCT: DJH RCT: MOL

43-20 BKG:	0	EFF:	0.193	PROBE AREA:	181	cm	Surface Eff:		0.5	
43-37 BKG:	0	EFF:	0.183	PROBE AREA:	584	cm	Surface Eff:		0.5	
LOCATION	2350#	RCT ID	PROBE	DET #	ITEM #	DATE	TIME	CNTS	CT TIME	dpm/100cm2
SRCBKG	5671	[redacted]	5675	4		1/22/02	10:38	25	300	9
SRCCHECK	5671	[redacted]	5675	4		1/22/02	10:42	1835	60	3434
SRCCHECK	5671	[redacted]	5675	4		1/22/02	10:44	2100	60	3930
SRCCHECK	5671	[redacted]	5675	4		1/22/02	10:46	1895	60	3546
SRCCHECK	5671	[redacted]	5675	4		1/22/02	10:48	2063	60	3861
SRCCHECK	5671	[redacted]	5675	4		1/22/02	10:49	1843	60	3449
SRCCHECK	5671	[redacted]	5675	4		1/22/02	10:51	2130	60	3986
SRCBKG	5671	[redacted]	5148	3		1/22/02	10:59	21	300	24
SRCCHECK	5671	[redacted]	5148	3		1/22/02	11:02	2002	60	11462
SRCCHECK	5671	[redacted]	5148	3		1/22/02	11:03	2099	60	12017
SRCCHECK	5671	[redacted]	5148	3		1/22/02	11:05	1934	60	11073
SRCCHECK	5671	[redacted]	5148	3		1/22/02	11:07	1929	60	11044
110-01	5671	[redacted]	5148	3	1	1/22/02	14:11	20	110	62
110-02	5671	[redacted]	5148	3	2	1/22/02	14:14	15	110	47
110-03	5671	[redacted]	5148	3	3	1/22/02	14:20	45	110	141
110-04	5671	[redacted]	5148	3	4	1/22/02	14:23	5	110	16
110-05	5671	[redacted]	5148	3	5	1/22/02	14:28	3	110	9
110-06	5671	[redacted]	5148	3	6	1/22/02	14:31	6	110	19
110-07	5671	[redacted]	5148	3	7	1/22/02	14:33	27	110	84
110-08	5671	[redacted]	5148	3	8	1/22/02	14:36	6	110	19
110-09	5671	[redacted]	5148	3	9	1/22/02	14:38	8	110	25
110-10	5671	[redacted]	5148	3	10	1/22/02	14:42	10	110	31
110-11	5671	[redacted]	5148	3	11	1/22/02	14:44	2	110	6
110-12	5671	[redacted]	5148	3	12	1/22/02	14:47	22	110	69
110-13	5671	[redacted]	5148	3	13	1/22/02	14:49	13	110	41
110-14	5671	[redacted]	5148	3	14	1/22/02	14:54	5	110	16
110-15	5671	[redacted]	5148	3	15	1/22/02	14:58	19	110	59
110-16	5671	[redacted]	5148	3	16	1/22/02	15:00	12	110	37
110-17	5671	[redacted]	5148	3	17	1/22/02	15:03	9	110	28
110-18	5671	[redacted]	5148	3	18	1/22/02	15:05	6	110	19
110-19	5671	[redacted]	5148	3	19	1/22/02	15:08	9	110	28
110-20	5671	[redacted]	5148	3	20	1/22/02	15:12	8	110	25
110-21	5671	[redacted]	5148	3	21	1/22/02	15:15	5	110	16
110-22	5671	[redacted]	5148	3	22	1/22/02	15:17	9	110	28
110-23	5671	[redacted]	5148	3	23	1/22/02	15:26	4	110	12
110-24	5671	[redacted]	5148	3	24	1/22/02	15:28	6	110	19
110-25	5671	[redacted]	5148	3	25	1/22/02	15:30	21	110	66

C9 of 63

BLDG 110 M-2350 SURVEY

RSDS# 02-TF-0147 RCT: DJA RCT: MOL

LOCATION	2350#	RCT ID	PROBE	DET #	ITEM #	DATE	TIME	CNTS	CT TIME	dpm/100cm2
110-26	5671	[redacted]	5148	3	26	1/22/02	15:34	15	110	47
110-27	5671	[redacted]	5148	3	27	1/22/02	15:41	18	110	56
110-28	5671	[redacted]	5148	3	28	1/22/02	15:49	19	110	59
110-29	5671	[redacted]	5148	3	29	1/22/02	16:07	23	110	72
110-30	5671	[redacted]	5148	3	30	1/22/02	16:10	14	110	44
110-31	5671	[redacted]	5148	3	31	1/22/02	16:12	3	110	9
110-32	5671	[redacted]	5148	3	32	1/22/02	16:14	13	110	41
110-33	5671	[redacted]	5148	3	33	1/22/02	16:17	39	110	122
110-34	5671	[redacted]	5148	3	34	1/22/02	16:20	13	110	41
110-35	5671	[redacted]	5148	3	35	1/22/02	16:22	10	110	31
110-36	5671	[redacted]	5148	3	36	1/22/02	16:25	21	110	66
110-37	5671	[redacted]	5148	3	37	1/22/02	16:28	10	110	31

C-10 of 63

CONTAMINATION PROBE INTEGRATED COUNT MDA

<SELECT> Probe Type		181	Model 43-20 cm2	Active Probe Area
<ENTER> Isotopic Efficiency Listed on Probe	Ei	0.166	c/d	Instrument Efficiency (c/d-on Probe)
<SELECT> Contamination Type (Alpha Or Beta)	Es		0.5	Surface Efficiency (1 for beta/0.5 for alpha)
	E	0.083		Total Efficiency (CALCULATED =Ei * Es)
<ENTER> Background Count Rate	Rb	4.2	CPM	Background Count Rate
<ENTER> Background Count Time (minutes)	Tb	5	min.	

Enter the above information in the 'gray areas'. Then adjust sample intergrated count time to obtain desired MDA.

Sample Integrated Count Time (sec.)		110	sec.
Sample Count Time (minutes) (Tsb)		1.83	min.
*	MDA	50	dpm/100 cm2

Minimum Activity Detected Per Probe Area (dpm/Probe): 90

Performed by: [signature] MJK HP#: [redacted] Date: 1-22-2002

* MDA Equation Source: NUREG 1507, Eq. 3-11 (Strom & Stansbury 1992), where K = E*A/100

C11 of 63

RADIOLOGICAL SURVEY DATA SHEET

LOCATION: (BLDG./AREA/ROOM) 110	SURVEY NO. 02-TF-0197
PURPOSE: FUEL TANK AREA SMEAR AND EXPOSURE RATE SURVEY	RWP NO. N/A
	DATE: 2-11-02
	TIME: 0900

MAP/DRAWING

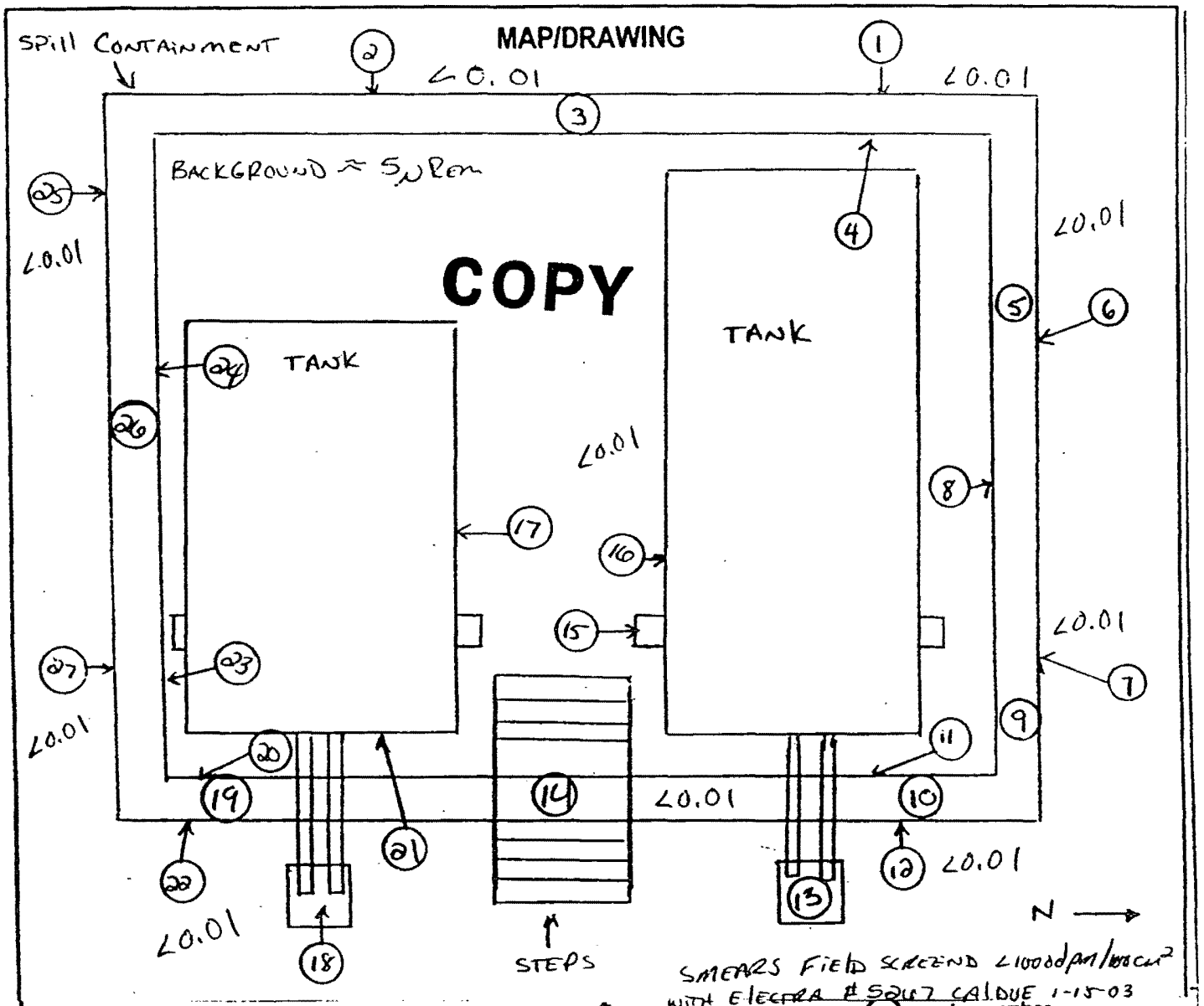

LEGEND:
= mrem/hr (γ) whole body
E = mrem/hr (β+η+γ) extremity on contact
= mrem/hr neutron
= air sample number
= swipe number
#/α or /β = direct cont. measurement in dpm/100cm²

INSTRUMENTS USED

Instrument	Serial Number	Cal. Due Date
Bicron μRem	3930	8-6-02

Completed by: (Signature)	HPS [redacted]	Date: 2-13-02
Completed by: (Print Name) MICHAEL J RUBADUE		
Counted by: (Signature) SEE	HPS	Date:
Counted by: (Print Name) ATTACHED		
Reviewed/Approved by: (Signature)	HPS [redacted]	Date: 02/18/02
Reviewed/Approved by: (Print Name) RM Coblentz		

ML-0520 (2-98)

RADIOLOGICAL SURVEY DATA SHEET (cont.)

Removable Contamination				
Swipes (dpm/100cm²)				
Sample #	β/γ	Alpha	Tritium	Comments
1	SEE	ATTACHED		SEE MAP
2				
3				
4				
5				
6				
7				
8				
9				
10				
11				
12				
13				
14				
15				
16				
17				
18				
19				
20				
21				
22				
23				
24				
25				
26				
27				
28				
29				
30				
31				
32				
33				
34				
35	SEE	ATTACHED		SEE MAP

Removable Contamination				
Swipes (dpm/100cm²)				
Sample #	β/γ	Alpha	Tritium	Comments
36	SEE			SEE MAP
37		ATTACHED		SEE MAP

COMMENTS: N/A

N/A

NOTES:
1. See MD-60036 10002 for calculations of WB, extremity and skin dose rates.
2. To request RO Count Room analysis for β/γ, alpha or tritium, leave column blank. Mark column N/A if not needed. If count room printout of results are attached, write "see attached" in column.
3. Annotate special sample type (e.g., soil, water), special identifiers or otherwise in Comments. If not needed, mark N/A.

ML-0620 (4-96)

RADIOLOGICAL SURVEY DATA SHEET

Page ~~1~~ 3 of 8 MF 2-13-02

LOCATION: (BLDG/AREA/ROOM) 110	SURVEY NO. 02-TF-0197
PURPOSE: FUEL TANK AREA SMEAR AND EXPOSURE RATE SURVEY	RWP NO. N/A
	DATE: 2-11-02
	TIME: 0900

MAP/DRAWING

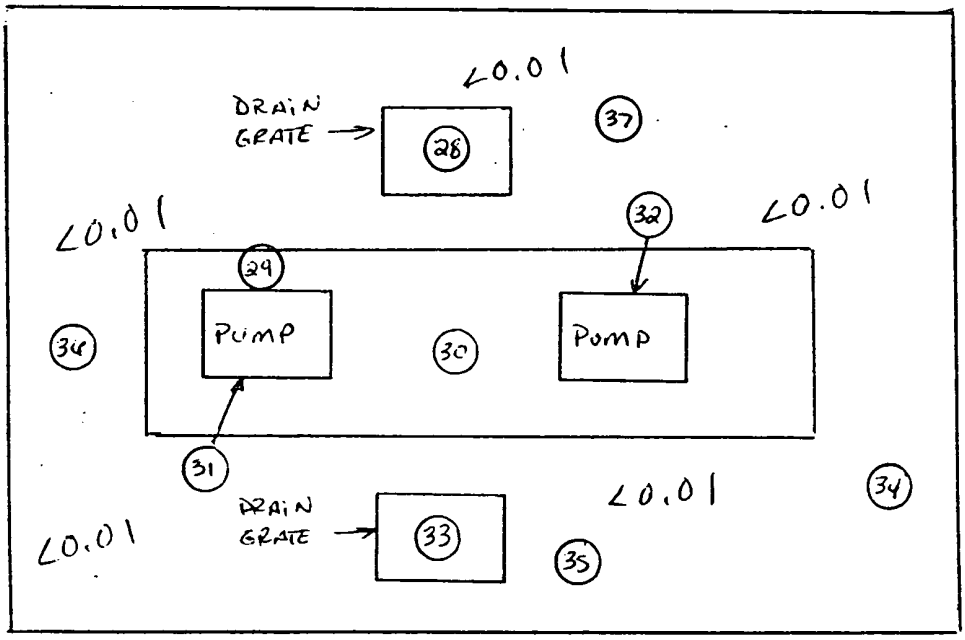

BACKGROUND ≈ 5 uREM

SMEARS FIELD SCREENED <1000 dpm/100cm²
WITH ELECTRA # 5207 CAL DUE 1-15-03

N →

LEGEND: # = mrem/hr (γ) whole body
E = mrem/hr (β+η+γ) extremity on contact
= mrem/hr neutron
= air sample number
= swipe number
#/α or /β = direct cont. measurement in dpm/100cm²

INSTRUMENTS USED

Instrument	Serial Number	Cal. Due Date
Bicron uRem	3930	8-6-02

Completed by: (Signature)	HP# [redacted]	Date: 2-13-02
Completed by: (Print Name) MICHAEL J RUBADUE		
Counted by: (Signature)	HP#	Date:
Counted by: (Print Name)		
Reviewed/Approved by: (Signature)	HP#	Date:
Reviewed/Approved by: (Print Name)		

ML-0620 (2-98)

C15 of 63

Survey No. 02-TF-0197

RADIOLOGICAL SURVEY DATA SHEET (cont.)

Removable Contamination				
Swipes (dpm/100cm²)				
Sample #	β/γ	Alpha	Tritium	Comments

Removable Contamination				
Swipes (dpm/100cm²)				
Sample #	β/γ	Alpha	Tritium	Comments

COMMENTS: N/A

N/A

NOTES:

1. See MD-60036 10002 for calculations of WB, extremity and skin dose rates.
2. To request RO Count Room analysis for β/γ, alpha or tritium, leave column blank. Mark column N/A if not needed. If count room printout of results are attached, write "see attached" in column.
3. Annotate special sample type (e.g., soil, water), special identifiers or otherwise in Comments. If not needed, mark N/A.

ML-9620 (4-98)

Smear Analysis

Unit Type: LB4100/W
Counting Unit ID: Aqua
Data file name: SMEAR008
Batch Ended: 2/12/02 9:54

Crosstalk correction performed.

Recalibration Date: 4/3/02
Serial Number: 26966-1

Batch ID: RUBADUE SUR #02-TF-0197 (37)/BKS

Detector ID	Sample ID	Alpha Activity			Beta Activity		
		DPM	σ	flags	DPM	σ	flags
A1	1	3.75	3.07		0.00	2.47	
A2	2	1.70	2.24		0.00	1.49	
A3	3	0.00	2.04		0.00	1.41	
A4	4	1.49	2.02		0.80	2.68	
B1	5	0.00	2.04		0.35	1.68	
B2	6	0.00	2.15		5.12	2.98	
B3	7	0.00	1.94		2.17	2.37	
B4	8	0.00	1.88		0.00	1.12	
C1	9	0.00	2.25		0.41	4.53	
C2	10	0.00	2.16		3.68	3.86	
C3	11	0.00	2.00		1.19	2.72	
C4	12	1.67	1.93		0.00	1.43	
D1	13	0.00	2.20		0.00	1.51	
D2	14	1.69	2.21		4.96	3.08	
D3	15	0.00	2.08		2.86	2.67	
A1	16	3.75	3.06		0.00	2.09	
A2	17	0.00	2.25		1.14	1.99	
A3	18	0.00	2.05		0.00	1.88	
A4	19	0.00	1.99		0.00	1.57	
B1	20	0.00	2.04		0.35	1.68	
B2	21	1.72	2.06		0.00	1.22	
B3	22	0.97	1.99		7.95	3.57	
B4	23	0.00	1.88		0.00	1.12	
C1	24	0.00	2.25		0.41	4.53	
C2	25	0.00	2.14		0.88	3.32	
C3	26	0.00	1.99		0.00	2.04	
C4	27	0.00	1.93		0.00	1.43	
D1	28	4.19	3.09		0.00	1.51	
D2	29	0.00	2.15		0.00	1.42	
D3	30	0.00	2.06		0.00	1.44	
A1	31	0.00	2.19		0.00	1.63	
A2	32	1.69	2.25		0.98	1.99	

MOR MOR

Smear Analysis

Unit Type: LB4100/W
Counting Unit ID: Aqua
Data file name: SMEAR008
Batch Ended: 2/12/02 9:54

Crosstalk correction performed.

Recalibration Date: 4/3/02
Serial Number: 26966-1

Batch ID: RUBADUE SUR #02-TF-0197 (37)/BKS

Detector ID	Sample ID	Alpha Activity			Beta Activity		
		DPM	σ	flags	DPM	σ	flags
A3	33	1.58	2.04		0.00	1.41	
A4	34	0.00	1.99		0.00	1.57	
B1	35	0.00	2.03		0.00	1.19	
B2	36	0.00	2.11		2.70	2.43	
B3	37	0.00	1.92		0.99	2.05	

MJR MJR

C18 of 63

PAGE 6 of 8

Carol Y. Robinson

Time: 2.00
Data Mode: DPM Nuclide: SM6L2 Quench Set: SM_GLASS
Background Subtract: 1st Vial

	LL	UL	LCR	2SI	BKG
Region A:	0.5 -	18.6	0	0.0	10.93
Region B:	2.0 -	18.6	0	0.0	10.15
Region C:	40.0 -	2000	0	0.0	4.44

Quench Indicator: tSIE/AEC
Ext Std Terminator: Count
RUBADUE 02-T-0197 (F1-F37) CYR
Luminescence Correction On
Coincidence Time(ns): 18
Delay Before Burst(ns): Normal
Protocol Data Filename: c:\data\prot1.dat
Count Data Filename: c:\data\SDATA7.DAT
Spectrum Data Drive & Path: c:\data

S#	TIME	CPMA	LUM	FLAG	tSIE	DPM1	2Sigma	CPMC
-1	10.00	10.93	2	B	677.92		0.00	4.44
0	2.00	921.93	0		559.51	1918.92	146.14	4.06
1	2.00	0.00	9		535.80	0.00	0.00	0.00
2	2.00	0.00	0		569.38	0.00	0.00	0.06
3	2.00	2.07	4		647.81	4.00	10.66	5.56
4	2.00	5.72	82		621.93	11.30	32.79	2.06
5	2.00	0.00	45		633.68	0.00	0.00	4.06
6	2.00	0.00	7		519.91	0.00	0.00	4.56
7	2.00	0.00	7		588.30	0.00	0.00	2.06
8	2.00	0.00	94		633.86	0.00	0.00	1.06
9	2.00	0.00	69		633.30	0.00	0.00	0.06
10	2.00	0.00	86		594.23	0.00	0.00	4.06
11	2.00	0.00	100		661.58	0.00	0.00	1.06
12	2.00	0.00	7		534.78	0.00	0.00	0.00
13	2.00	0.00	17		554.75	0.00	0.00	1.56
14	2.00	0.00	0		411.80	0.00	0.00	6.39
15	2.00	0.00	0		653.88	0.00	0.00	1.56
16	2.00	0.00	11		558.74	0.00	0.00	2.56
17	2.00	0.00	13		499.77	0.00	0.00	3.06
18	2.00	3.29	96		235.14	12.73	133.79	0.00
19	2.00	0.07	25		615.35	0.13	12.30	0.00
20	2.00	0.00	70		627.18	0.00	0.00	3.06
21	2.00	0.00	10		534.61	0.00	0.00	0.44
22	2.00	0.00	8		618.41	0.00	0.00	3.06
23	2.00	0.00	52		639.53	0.00	0.00	1.06
24	2.00	0.00	57		632.39	0.00	0.00	0.00
25	2.00	0.00	0		577.52	0.00	0.00	0.00
26	2.00	0.00	20		659.38	0.00	0.00	0.00
27	2.00	0.00	7		563.01	0.00	0.00	1.56
28	2.00	0.00	0		581.39	0.00	0.00	2.25
29	2.00	0.00	25		657.72	0.00	0.00	1.56
30	2.00	0.00	10		634.71	0.00	0.00	0.00
31	2.00	0.00	0		503.22	0.00	0.00	3.56
32	2.00	0.00	0		532.81	0.00	0.00	0.00
33	2.00	0.00	8		550.71	0.00	0.00	0.56
34	2.00	0.00	5		649.52	0.00	0.00	0.00

MJL

S#	TIME	CPMA	LUM FLAG	tSIE	DPM1	2Sigma	CPMC
35	2.00	0.00	8	646.79	0.00	0.00	0.00
36	2.00	0.00	7	656.87	0.00	0.00	1.56
37	2.00	0.00	11	638.25	0.00	0.00	1.56

MSK

Carol G. Robinson
#413

RADIOLOGICAL SURVEY DATA SHEET

LOCATION: (BLDG./AREA/ROOM) 110	SURVEY NO. 02-TF-0701
PURPOSE: RE-SURVEY OF 110	RWP NO. N/A
	DATE: 4-16-02
	TIME: 1130

MAP/DRAWING

COPY

See page 3 for results

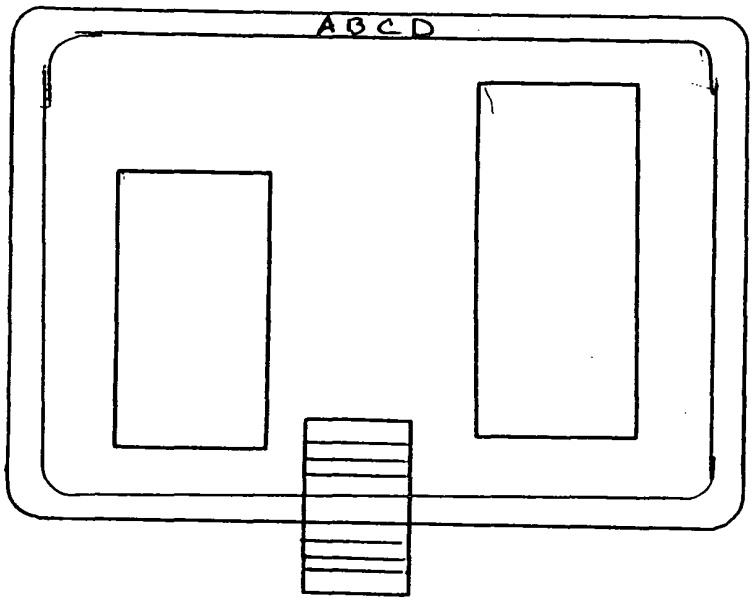

* NOTE: THIS IS A RE-SURVEY OF BUILDING 110 (RSDS# 02-TF-0147) AND ADJOINING AREAS

LEGEND: # = mrem/hr (γ) whole body
#E = mrem/hr (β+η+γ) extremity on contact
△# = mrem/hr neutron
[#] = air sample number
(#) = swipe number
(#/α) or/β = direct cont. measurement in dpm/100cm²

INSTRUMENTS USED

Instrument	Serial Number	Cal. Due Date
M-2350	5671/5148	9-21-02
	N/A	

Completed by: (Signature)	HP # [redacted]	Date: 4-16-2002
Completed by: (Print Name) DANIEL J. HARVEY / PSKEARLEY		
Counted by: (Signature) N/A	HP #	Date:
Counted by: (Print Name)		
Reviewed/Approved by: (Signature)	HP # [redacted]	Date: 4/19/02
Reviewed/Approved by: (Print Name) RMCoblentz		

ML-9620 (2-98)

2 of 3

Survey No. 02-TF-0701

Page ____ of ____

RADIOLOGICAL SURVEY DATA SHEET (cont.)

Removable Contamination				
Swipes (dpm/100cm²)				
Sample #	β/γ	Alpha	Tritium	Comments

Removable Contamination				
Swipes (dpm/100cm²)				
Sample #	β/γ	Alpha	Tritium	Comments

N/A

COMMENTS: N/A

NOTES:
1. See MD-80036 10002 for calculations of WB, extremity and skin dose rates.
2. To request RO Count Room analysis for β/γ, alpha or tritium, leave column blank. Mark column N/A if not needed. If count room printout of results are attached, write "see attached" in column.
3. Annotate special sample type (e.g., soil, water), special identifiers or otherwise in Comments. If not needed, mark N/A.

ML-9620A (4-98)

110-BLDG MARSSIM M-2350 SURVEY

RSDS#_ 02-TF-0701 RCT: [illegible] RCT: ~~N/A~~ RADLEY 4/16/02

43-20 BKG:	0	EFF:	0.193	PROBE AREA:	181	cm2	Surface Eff:		0.5	Detector # :	3
43-37 BKG:	0	EFF:	0.183	PROBE AREA:	584	cm2	Surface Eff:		0.5	Detector # :	
LOCATION	2350#	RCT ID	PROBE	DET #	ITEM #	DATE	TIME	CNTS	CT TIME	dpm/100cm2	
SRC BKG	5671		5148	3	0	4/16/02	9:27	2	300	2	
SRC CHECK	5671		5148	3	1	4/16/02	9:40	2065	60	11823	
SRC CHECK	5671		5148	3	2	4/16/02	9:42	2131	60	12200	
SRC CHECK	5671		5148	3	5	4/16/02	9:46	1852	60	10603	
SRC CHECK	5671		5148	3	6	4/16/02	9:47	2134	60	12218	
110 A	5671		5148	3	7	4/16/02	11:24	4	60	23	
110 B	5671		5148	3	8	4/16/02	11:26	8	60	46	
110 C	5671		5148	3	9	4/16/02	11:27	7	60	40	
110 D	5671		5148	3	10	4/16/02	11:28	7	60	40	

RPOC Comments: Previous survey showed elevated readings. Radon progeny was suspected, so this following survey was performed.
RWC

RADIOLOGICAL SURVEY DATA SHEET

1 of 2

LOCATION: (BLDG./AREA/ROOM) 110 / GAS TANKS	SURVEY NO. 02-TF-082A
PURPOSE: CONFIRMATION	RWP NO. N/A
	DATE: 5-15-02
	TIME: 1600

MAP/DRAWING

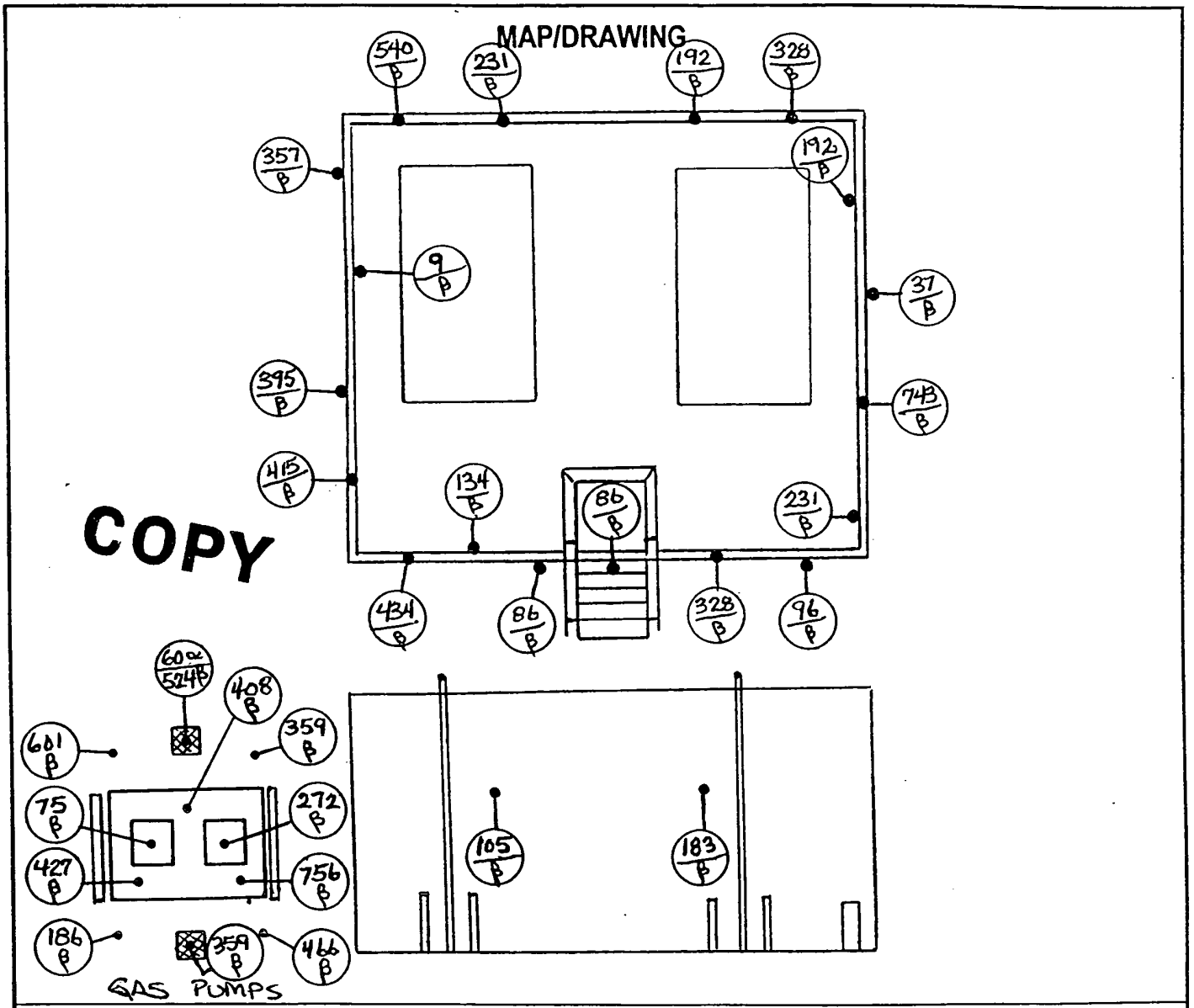

COPY

LEGEND: # = mrem/hr (γ) whole body
#□ = [illegible] extremity on contact

△# = mrem/hr neutron

[#] = air sample number

(#) = swipe number

(#/α) or/β = direct cont. measurement in dpm/100cm²

INSTRUMENTS USED

Instrument	Serial Number	Cal. Due Date
ELECTRA	5344/5377	5-1-03

Completed by: (Signature) [signature]	HP [redacted]	Date: 5-15-02
Completed by: (Print Name) PG KADLEY / DJ HARVEY		
Counted by: (Signature) N	HP # N/A	Date: N/A
Counted by: (Print Name)		
Reviewed/Approved by: (Signature) [signature]	HP # [redacted]	Date: 5-17-02
Reviewed/Approved by: (Print Name) RMCoblentz		

ML-9620 (2-88)

RADIOLOGICAL SURVEY DATA SHEET (cont.)

Removable Contamination				
Swipes (dpm/100cm²)				
Sample #	β/γ	Alpha	Tritium	Comments

N/A

Removable Contamination				
Swipes (dpm/100cm²)				
Sample #	β/γ	Alpha	Tritium	Comments

N/A

COMMENTS: N/A

NOTES:
1. See MD-80036 10002 for calculations of WB, extremity and skin dose rates.
2. To request RO Count Room analysis for β/γ, alpha or tritium, leave column blank. Mark column N/A if not needed. If count room printout of results are attached, write "see attached" in column.
3. Annotate special sample type (e.g., soil, water), special identifiers or otherwise in Comments. If not needed, mark N/A.

ML-9620A (4-98)

RSDSs After Demolition

RADIOLOGICAL SURVEY DATA SHEET

Pg. 1 of 3

LOCATION: (BLDG./AREA/ROOM) OLD 110 / GAS TANKS	SURVEY NO. 02-TF-1476
PURPOSE: RELEASE OF METAL DEBRIS PILE TO WASTE MGMT.	RWP NO. N/A
	DATE: 9-26-02
	TIME: 1400

MAP/DRAWING

METAL DEBRIS PILE

NOTE: INTEGRATED COUNT PERFORMED IF ALPHA AUDIBLE DETECTED. DIRECT FRISK READINGS INDICATE: <100/α <5K/β

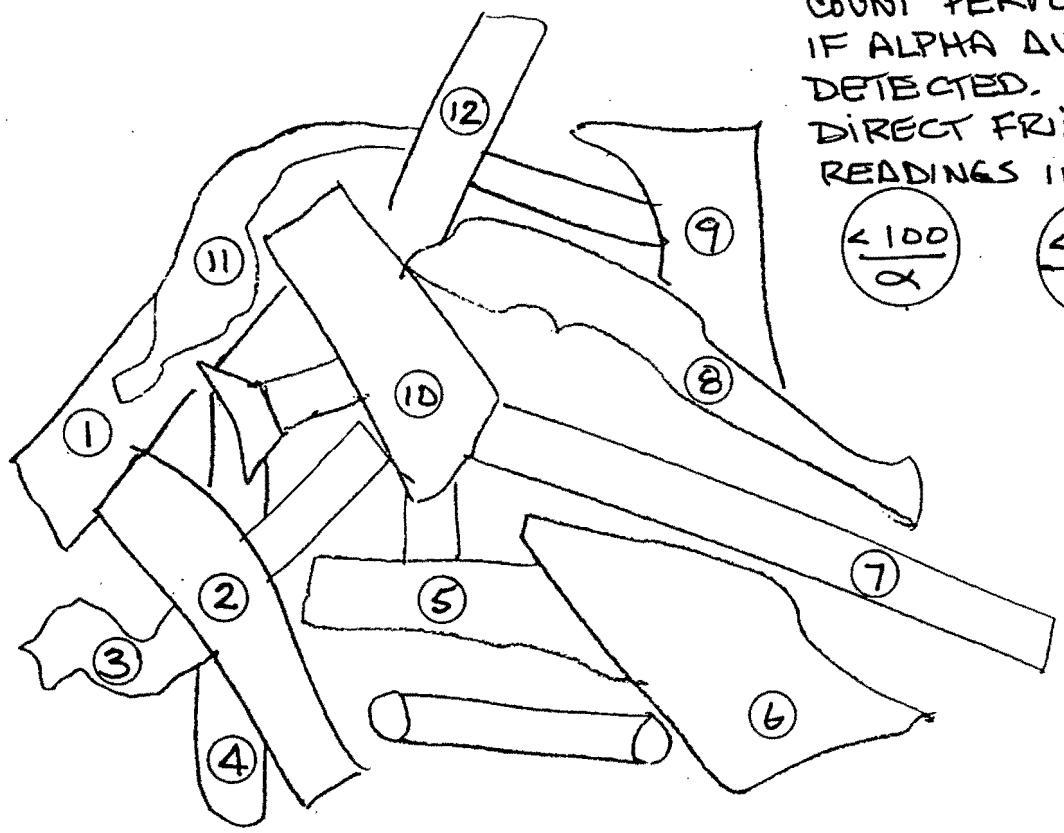

LEGEND: # = mrem/hr (γ) whole body
#E = mrem/hr (β+γ) extremity-on contact
= mrem/hr neutron
= air sample number
= swipe number
#/α or/β = direct cont. measurement in dpm/100cm²

INSTRUMENTS USED

Instrument	Serial Number	Cal. Due Date
LUD 2360	5711/5719	9-9-03
BICRON	3815/3846	1-7-03
	N/A	

Completed by: (Signature) PG Rabley	HP # [redacted]	Date: 9-26-02
Completed by: (Print Name) PG RABLEY		
Counted by: (Signature) SEE	HP #	Date:
Counted by: (Print Name) ATTACHED		
Reviewed/Approved by: (Signature)	HP #	Date:
Reviewed/Approved by: (Print Name)		

ML-9620 (2-98)

Survey No. 02-TF-1476

RADIOLOGICAL SURVEY DATA SHEET (cont.)

Removable Contamination				
Swipes (dpm/100cm²)				
Sample #	β/γ	Alpha	Tritium	Comments
1	SEE ATTACHED			METAL DEBRIS PILE
2	↓	↓	↓	↓
3				
4				
5				
6				
7				
8				
9				
10				
11				
12	↓	↓	↓	↓
			N/A	

Removable Contamination				
Swipes (dpm/100cm²)				
Sample #	β/γ	Alpha	Tritium	Comments
		N/A		

COMMENTS: N/A

NOTES:
1. See MD-80036 10002 for calculations of WB, extremity and skin dose rates.
2. To request RO Count Room analysis for β/γ, alpha or tritium, leave column blank. Mark column N/A if not needed. If count room printout of results are attached, write "see attached" in column.
3. Annotate special sample type (e.g., soil, water), special identifiers or otherwise in Comments. If not needed, mark N/A.

ML-9620A (4-98)

69-2) 0508-JM

Alpha/Beta Analysis

Batch ID:	Smear Unit 1 - 200209261320	**Count Date:**	9/26/2002
Group:	G	**Count Minutes:**	1.5
Serial Number:	78218-1	**Count Mode:**	Simultaneous
Batch ID:	02-TF-1476 RADLEY(12) BSB	**Operating Volts:**	1410
Selected Geometry:	Swipe/Smear	**Cal Due Dates:**	6/19/2004

	Efficiency (%)				**Spillover (%)**			
Alpha:	34.73	±	0.13		**Alpha to Beta:**	11.39	±	0.00
Beta:	46.13	±	0.13		**Beta to Alpha:**	0.07	±	0.00

Sample ID	Carrier ID	Alpha (dpm)	σ	Beta (dpm)	σ
1	30	0.00	0.00	4.11	2.50
2	84	8.75	3.84	0.00	0.33
3	24	0.00	0.00	2.74	2.04
4	95	8.74	3.84	8.97	3.84
5	87	8.74	3.84	10.34	4.10
6	88	2.19	1.92	1.21	1.45
7	18	4.37	2.72	3.80	2.51
8	37	2.18	1.92	5.32	2.90
9	31	0.00	0.00	1.37	1.45
10	7	0.00	0.00	2.74	2.04
11	56	0.00	0.00	1.37	1.45
12	66	2.18	1.92	5.32	2.90

PGR PGR

BSBrown

Batch ID: 02-TF-1476 RADLEY(12) BSB

RADIOLOGICAL SURVEY DATA SHEET

LOCATION: (BLDG./AREA/ROOM) 110 OIL SEPARATOR / O/S	SURVEY NO. 02-TF-1478
PURPOSE: RELEASE OF OIL SEPARATOR TO WASTE MGMT.	RWP NO. 9-30-02 PGR ~~N/A~~ 1182
	DATE: 9-28-02
	TIME: 1400

MAP/DRAWING

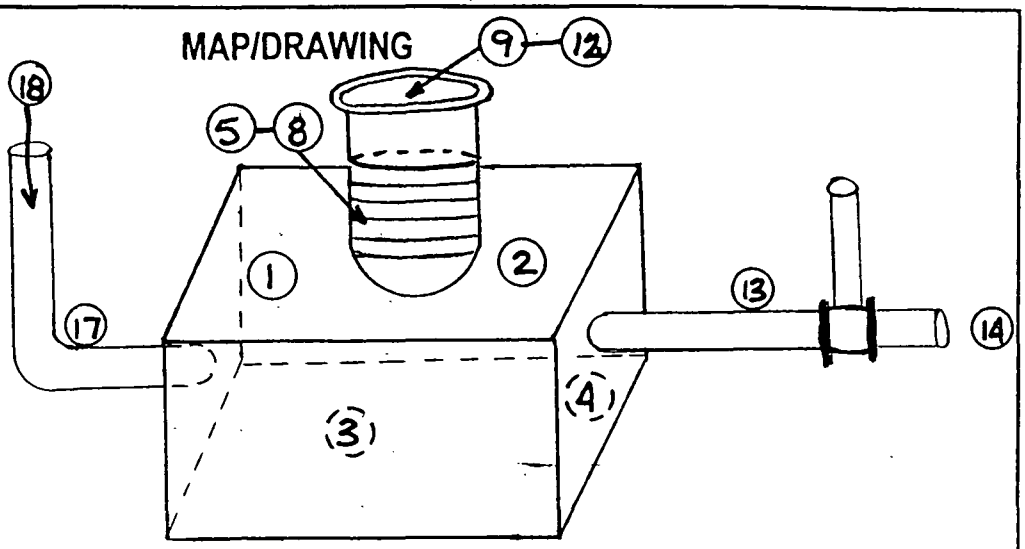

NOTE: INTEGRATED COUNT PERFORMED IF ALPHA AUDIBLE DETECTED.

DIRECT FRISK RESULTS INDICATE:

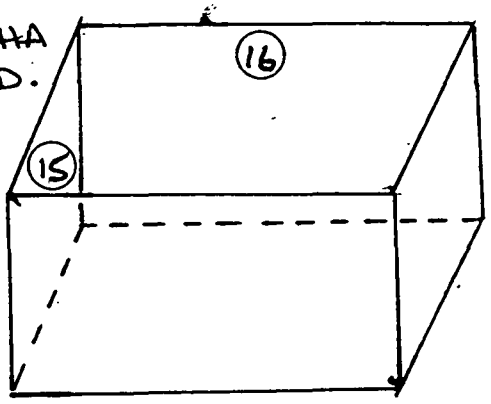

<100 / α <5K / β

LEGEND: # = mrem/hr (γ) whole body

(β/γ) extremity on contact

= mrem/hr neutron

= air sample number

= swipe number

#/α = α/β = direct cont. measurement in dpm/100cm²

INSTRUMENTS USED

Instrument	Serial Number	Cal. Due Date
2360	5711/5719	9-9-03
BICRON	3815/3846	1-7-03
	N	
	A	

Completed by: (Signature) PG Radley / D. J. Harvey	HP # [redacted]	Date: 9-28-02
Completed by: (Print Name) PG RADLEY / D.J. HARVEY		
Counted by: (Signature) SEE	HP #	Date:
Counted by: (Print Name) ATTACHED		
Reviewed/Approved by: (Signature) RM Coblentz	HP # [redacted]	Date: 9-30-02
Reviewed/Approved by: (Print Name) RM Coblentz		

ML-9620 (2-98)

Survey No. 02-TF-1478

RADIOLOGICAL SURVEY DATA SHEET (cont.)

Removable Contamination				
Swipes (dpm/100cm²)				
Sample #	β/γ	Alpha	Tritium	Comments
1	SEE	ATTACHED		O/S COVER
2	↓	↓	↓	↓
3				I/S COVER
4				↓
5				RINGS O/S
6				↓
7				I/S
8				↓
9				METAL COVER O/S
10				O/S
11				I/S
12				I/S
13				PIPE CONNECTOR O/S
14				↓ I/S
15				COLLECTOR I/S
16				↓
17				VENT PIPE O/S
18				↓ I/S
		N/A		

Removable Contamination				
Swipes (dpm/100cm²)				
Sample #	β/γ	Alpha	Tritium	Comments
		N/A		

COMMENTS: N/A

NOTES:
1. See MD-80036 10002 for calculations of WB, extremity and skin dose rates.
2. To request RO Count Room analysis for β/γ, alpha or tritium, leave column blank. Mark column N/A if not needed. If count room printout of results are attached, write "see attached" in column.
3. Annotate special sample type (e.g., soil, water), special identifiers or otherwise in Comments. If not needed, mark N/A.

ML-9620A (4-98)

Alpha/Beta Analysis

Unit Type: LB4100/W
Counting Unit ID: Green
Data file name: SMEAR005
Batch Ended: 9/28/2002 14:19
Recalibration Date: ~~7/8/2004~~
Serial Number: 64575

02-TF-1478

Batch ID: HARVEY SUR ~~#02-TF-1477~~(18)BH

DJA 9-28-02

Detector ID	Sample ID	Alpha Activity DPM	Alpha Activity σ	Alpha Activity flags	Beta Activity DPM	Beta Activity σ	Beta Activity flags
A1	1	1.8	2.1		5.0	2.9	
A2	2	0.0	2.0		0.9	1.9	
A3	3	0.0	1.9		6.6	3.2	
A4	4	1.2	1.9		0.0	1.3	
B1	5	0.0	2.1		2.5	2.3	
B2	6	0.0	2.3		4.1	2.8	
B3	7	0.0	1.9		1.3	2.2	
B4	8	0.0	2.0		3.4	2.5	
C1	9	1.9	2.0		1.7	2.2	
C2	10	0.0	2.0		0.7	1.8	
C3	11	0.0	1.8		0.0	1.2	
C4	12	0.0	1.8		0.0	1.3	
D1	13	0.0	2.1		1.0	1.9	
D2	14	0.0	2.1		0.0	1.4	
D3	15	0.0	2.0		0.0	1.3	
D4	16	7.8	4.0		2.9	2.4	
A1	17	0.0	2.0		2.6	2.3	
A2	18	0.0	2.0		2.2	2.3	

PGR PGR

Brenda Hislope 9-28-02

C34 of 63

RADIOLOGICAL SURVEY DATA SHEET

LOCATION: (BLDG./AREA/ROOM) 110 GAS TANKS (OLD)	SURVEY NO. 02-TF-1480
PURPOSE: RELEASE FROM SCA	RWP NO. 1182
	DATE: ~~9-28-02~~ 9-29-02 DJH 9-29-02
	TIME: 0930

MAP/DRAWING

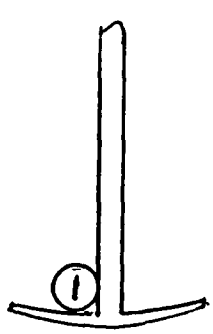

(1) PICK

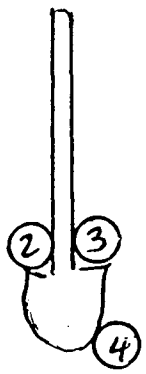

(3) SHOVEL

RUBBER BOOTS

(6) PAIRS (5) - (16)

(3) PAIRS OF GLOVES (17) - (22)

* INTEGRATED READING TAKEN IF AUDIBLE DETECTED ALL RESULTS → <100 α <5K β-

NO AUDIBLE DETECTED

LEGEND: # = mrem/hr (γ) whole body

= mrem/hr neutron

= swipe number

= air sample number

#/α or/β = direct cont. measurement in dpm/100cm²

INSTRUMENTS USED

Instrument	Serial Number	Cal. Due Date
LUDLUM 2360	5715/5720	9-25-03
	N/A	

Completed by: (Signature) [signature]	HP # [redacted]	Date: 9-30-02
Completed by: (Print Name) DANIEL J. HARVEY		
Counted by: (Signature) SEE	HP #	Date:
Counted by: (Print Name) ATTACHED		
Reviewed/Approved by: (Signature) RMCoblentz	HP # [redacted]	Date: 9-30-02
Reviewed/Approved by: (Print Name) RMCoblentz		

ML-9620 (2-98)

2 of 3

Survey No. 02-TF-1480

Page ____ of ____

RADIOLOGICAL SURVEY DATA SHEET (cont.)

Removable Contamination				
Swipes (dpm/100cm²)				
Sample #	β/γ	Alpha	Tritium	Comments
1	SEE ATTACHED		N/A	PICK
2-4	↓	↓	↓	SHOVEL
5-16				BOOTS
17-22				GLOVES
		N/A		

Removable Contamination				
Swipes (dpm/100cm²)				
Sample #	β/γ	Alpha	Tritium	Comments
		N/A		

COMMENTS: N/A

NOTES:
1. See MD-80036 10002 for calculations of WB, extremity and skin dose rates.
2. To request RO Count Room analysis for β/γ, alpha or tritium, leave column blank. Mark column N/A if not needed. If count room printout of results are attached, write "see attached" in column.
3. Annotate special sample type (e.g., soil, water), special identifiers or otherwise in Comments. If not needed, mark N/A.

ML-9620A (4-98)

Alpha/Beta Analysis

Batch ID:	Smear Unit 1 - 200209300744	**Count Date:**	9/30/2002
Group:	J	**Count Minutes:**	1.5
Serial Number:	78218-1	**Count Mode:**	Simultaneous
Batch ID:	02-TF-1480 HARVEY(22) BSB	**Operating Volts:**	1410
Selected Geometry:	Swipe/Smear	**Cal Due Dates:**	6/19/2004

Efficiency (%)				**Spillover (%)**			
Alpha:	34.73	±	0.13	**Alpha to Beta:**	11.39	±	0.00
Beta:	46.13	±	0.13	**Beta to Alpha:**	0.07	±	0.00

Sample ID	Carrier ID	Alpha (dpm)	σ	Beta (dpm)	σ
1	7	2.18	1.92	3.95	2.51
2	56	2.17	1.92	13.55	4.57
3	66	2.18	1.92	3.95	2.51
4	35	2.18	1.92	2.58	2.05
5	59	4.37	2.72	5.17	2.90
6	1	0.00	0.00	2.74	2.04
7	31	0.00	0.00	2.74	2.04
8	91	0.00	0.00	4.11	2.50
9	12	0.00	0.00	1.37	1.45
10	53	0.00	0.00	4.11	2.50
11	62	2.19	1.92	1.21	1.45
12	29	0.00	0.00	6.85	3.23
13	19	2.18	1.92	3.95	2.51
14	19	0.00	0.00	2.74	2.04
15	6	2.19	1.92	1.21	1.45
16	100	8.74	3.84	3.49	2.52
17	48	2.18	1.92	5.32	2.90
18	97	4.37	2.72	5.17	2.90
19	78	2.18	1.92	5.32	2.90
20	68	4.37	2.72	5.17	2.90
21	93	2.19	1.92	1.21	1.45
22	21	0.00	0.00	8.22	3.54

DJH DJH

LJ Brown

Batch ID: 02-TF-1480 HARVEY(22) BSB

RADIOLOGICAL SURVEY DATA SHEET

LOCATION: (BLDG./AREA/ROOM) 110 GAS TANKS (OCD)	SURVEY NO. 02-TF-1481
PURPOSE: RELEASE FROM SCA TO WASTEMANAGEMENT	RWP NO. 1182
	DATE: ~~9-28-02~~ 9-29-02 DJH
	TIME: 1300 9-29-02

MAP/DRAWING

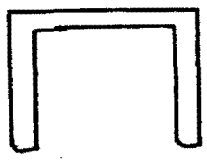

(2) BUMPER GUARDS
1 - 4

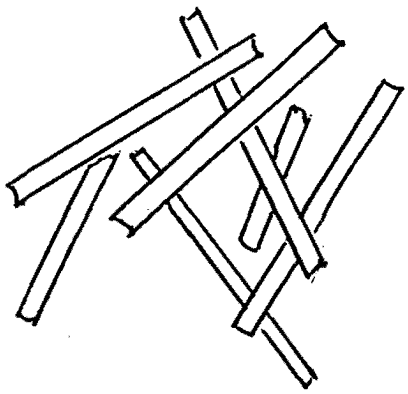

MISC PIPE
9 - 17

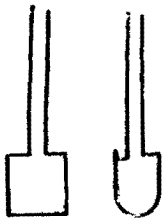

(4) POLES IN CONCRETE
5 - 8

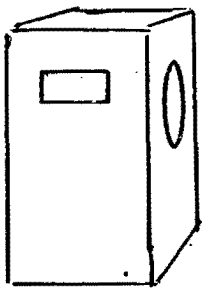

(2) GAS PUMPS

PUMP #1 18 - 23
PUMP #2 24 - 29

* INTEGRATED READING TAKEN IF AUDIBLE DETECTED ALL RESULTS

<100 / α <5K / β-

NO AUDIBLE DETECTED

LEGEND: # = mrem/hr (γ) whole body
(β/γ) extending on contact
= mrem/hr neutron
= air sample number
= swipe number
#/α or/β = direct cont. measurement in dpm/100cm²

INSTRUMENTS USED

Instrument	Serial Number	Cal. Due Date
LUDLUM 2360	5775-5720	9-25-03
	N/A	

Completed by: (Signature) [signature]	HP # [redacted]	Date: 9-30-02
Completed by: (Print Name) DANIEL J. HARVEY		
Counted by: (Signature) SEE	HP #	Date:
Counted by: (Print Name) ATTACHED		
Reviewed/Approved by: (Signature) RMCoblentz	HP # [redacted]	Date: 9-30-02
Reviewed/Approved by: (Print Name) RMCoblentz		

ML-9620 (2-98)

2 of 3

Survey No. 02-TF-1481

Page ___ of ___

RADIOLOGICAL SURVEY DATA SHEET (cont.)

Removable Contamination				
Swipes (dpm/100cm²)				
Sample #	β/γ	Alpha	Tritium	Comments
1-4	SEE ATTACHED		N/A	BUMPER GUARDS
5-8				POLES
9-17				MISC PIPE
18				PUMP #1 FRONT
19				SIDE
20				SIDE
21				BACK
22				TOP
23				BOTTOM
24				PUMP #2 FRONT
25				SIDE
26				SIDE
27				BACK
28				TOP
29				BOTTOM
			N/A	

Removable Contamination				
Swipes (dpm/100cm²)				
Sample #	β/γ	Alpha	Tritium	Comments
		N/A		

COMMENTS: N/A

NOTES:
1. See MD-80036 10002 for calculations of WB, extremity and skin dose rates.
2. To request RO Count Room analysis for β/γ, alpha or tritium, leave column blank. Mark column N/A if not needed. If count room printout of results are attached, write "see attached" in column.
3. Annotate special sample type (e.g., soil, water), special identifiers or otherwise in Comments. If not needed, mark N/A.

ML-9620A (4-98)

Alpha/Beta Analysis

Batch ID:	Smear Unit 1 - 200209300744	**Count Date:**	9/30/2002
Group:	E	**Count Minutes:**	1.5
Serial Number:	78218-1	**Count Mode:**	Simultaneous
Batch ID:	02-TF-1481	**Operating Volts:**	1410
Selected Geometry:	Swipe/Smear	**Cal Due Dates:**	6/19/2004

Background (cpm)				Efficiency (%)				Spillover (%)			
Alpha Rate:	0.18	±	0.18	**Alpha:**	34.73	±	0.13	**Alpha to Beta:**	11.39	±	0.00
Beta Rate:	0.82	±	0.42	**Beta:**	46.13	±	0.13	**Beta to Alpha:**	0.07	±	0.00

Sample ID	Carrier ID	Alpha (dpm)	σ	Beta (dpm)	σ
1	68	0.00	0.51	0.00	0.90
2	81	1.59	1.99	2.31	2.67
3	63	0.00	0.51	0.00	0.90
4	46	0.00	0.51	3.84	3.03
5	41	1.59	1.99	2.31	2.67
6	65	1.60	1.99	0.00	0.92
7	69	0.00	0.51	0.00	0.90
8	21	0.00	0.51	1.10	2.23
9	65	1.60	1.99	0.00	1.71
10	75	0.00	0.51	0.00	0.90
11	60	3.78	2.76	0.79	2.25
12	74	0.00	0.51	0.00	0.90
13	63	8.15	3.87	5.96	3.67
14	22	0.00	0.51	2.47	2.66
15	99	1.59	1.99	3.69	3.03
16	14	0.00	0.51	2.47	2.66
17	49	3.78	2.76	2.16	2.67
18	44	0.00	0.51	1.10	2.23
19	40	0.00	0.51	2.47	2.66
20	56	1.60	1.99	0.94	2.24
21	30	0.00	0.51	2.47	2.66
22	84	0.00	0.51	0.00	0.90
23	24	0.00	0.51	0.00	0.90
24	95	3.78	2.76	4.90	3.36
25	87	1.59	1.99	2.31	2.67
26	88	0.00	0.51	1.10	2.23
27	18	1.59	1.99	6.43	3.66
28	37	1.60	1.99	0.94	2.24
29	31	1.59	1.99	2.31	2.67

DJH DJH

Batch ID:

RADIOLOGICAL SURVEY DATA SHEET

LOCATION: (BLDG./AREA/ROOM) 110 GAS TANKS (OLD)	SURVEY NO 02-TF-1482
PURPOSE: RELEASED CONCRETE FROM SCA TO WASTEMANAGEMENT	RWP NO. 1182
	DATE: ~~9-28-2002~~ 9-29-2002
	TIME 1430 DJH 9-29-02

MAP / DRAWING

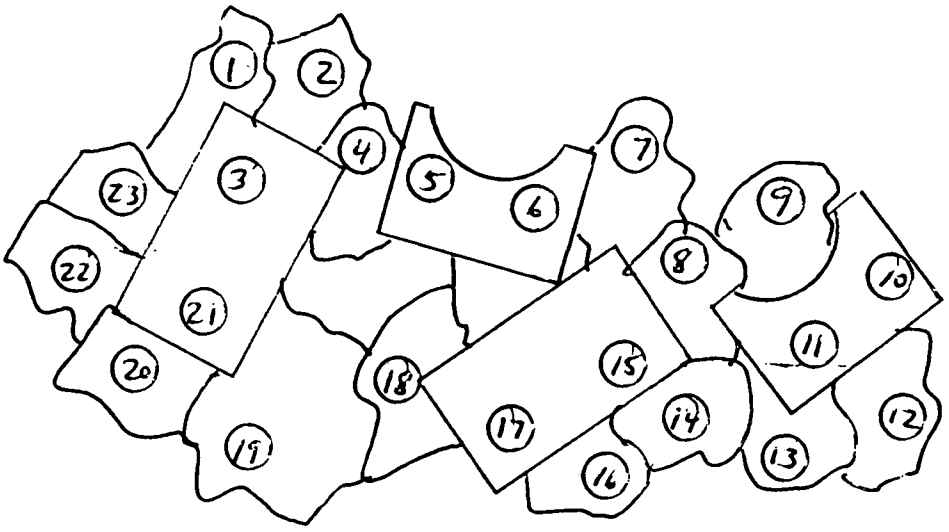

- NOTE: BICRON FIDLER USED FOR INDICATION ONLY. RESULTS WERE NON-DETECTABLE.
- INTEGRATED READING TAKEN IF AUDIBLE ALPHA DETECTED ALL RESULTS: <100 dpm/100cm2 ALPHA AND <5K dpm/100cm2 BETA NO AUDIBLE DETECTED

LEGEND:
= mrem/hr (γ) whole body
#E = mrem/hr (β+η+γ) extremity on contact
K = factor of 1000
— · — · - = radiological boundary
△# = mrem/hr neutron
(#) = swipe number
[#] = air sample number
(#/α) or /β = direct contamination measurement in dpm/100 cm²

INSTRUMENTS USED

Instrument	Serial Number	Cal. Due Date
LUDLUM 2360	5775/5720	9-25-03
BICRON	3815/3846	1-7-2003
	N/A	

Completed by: (Signature)	HP# [redacted]	Date: ~~9-28-2002~~ 9-29-02
Completed by: (Print Name) DANIEL J. HARVEY		DJH 9-29-02
Counted by: (Signature) RECORD ON FILE	HP# NA	Date: NA
Counted by: (Print Name) NA		
Reviewed/Approved by: (Signature) RMCoblentz	HP# [redacted]	Date: 9-30-02
Reviewed/Approved by: (Print Name) RMCoblentz		

2 of 3

Survey No. 02-TF-1482

Page ___ of ___

RADIOLOGICAL SURVEY DATA SHEET (cont.)

Removable Contamination				
Swipes (dpm/100cm²)				
Sample #	β/γ	Alpha	Tritium	Comments
1-23	SEE ATTACHED		N/A	CONCRETE
			N/A	

Removable Contamination				
Swipes (dpm/100cm²)				
Sample #	β/γ	Alpha	Tritium	Comments
			N/A	

COMMENTS: N/A

NOTES:
1. See MD-80036 10002 for calculations of WB, extremity and skin dose rates.
2. To request RO Count Room analysis for β/γ, alpha or tritium, leave column blank. Mark column N/A if not needed. If count room printout of results are attached, write "see attached" in column.
3. Annotate special sample type (e.g., soil, water), special identifiers or otherwise in Comments. If not needed, mark N/A.

ML-9620A (4-98)

Alpha/Beta Analysis

Batch ID:	Smear Unit 2 - 200209300751	**Count Date:**	9/30/2002
Group:	D	**Count Minutes:**	1.5
Serial Number:	78218-2	**Count Mode:**	Simultaneous
Batch ID:	02-TF-1482 HARVEY(23) BSB	**Operating Volts:**	1410
Selected Geometry:	Swipe/Smear	**Cal Due Dates:**	6/19/2004

	Efficiency (%)				Spillover (%)			
Alpha:	35.30	±	0.11		**Alpha to Beta:**	9.38	●	0.00
Beta:	44.94	●	0.12		**Beta to Alpha:**	0.85	±	0.00

Sample ID	Carrier ID	Alpha (dpm)	σ	Beta (dpm)	σ
1	3	0.00	0.02	1.28	1.48
2	5	4.00	2.67	3.60	2.58
3	11	0.00	0.00	0.00	0.00
4	37	4.01	2.67	2.32	2.11
5	33	0.00	0.00	0.00	0.00
6	96	0.00	0.02	1.28	1.48
7	72	0.00	0.02	1.28	1.48
8	10	0.00	0.02	1.28	1.48
9	77	0.00	0.00	0.00	0.00
10	91	0.00	0.03	5.12	2.97
11	85	0.00	0.03	5.12	2.97
12	4	0.00	0.02	1.28	1.48
13	27	0.00	0.02	1.28	1.48
14	1	0.00	0.02	1.28	1.48
15	88	0.00	0.02	2.56	2.10
16	92	0.00	0.02	1.28	1.48
17	53	0.00	0.02	2.56	2.10
18	34	0.00	0.02	2.56	2.10
19	40	0.00	0.00	0.00	0.00
20	15	0.00	0.02	2.56	2.10
21	50	4.01	2.67	2.32	2.11
22	83	4.05	2.67	0.00	0.20
23	39	0.00	0.03	5.12	2.97
		2 of 4		2 of 4	

BSBrown

Batch ID: 02-TF-1482 HARVEY(23) BSB

RADIOLOGICAL SURVEY DATA SHEET

LOCATION: (BLDG./AREA/ROOM) 110 OLD GAS PUMP / O/S	SURVEY NO. 02-TF-1479
PURPOSE: RELEASE OF HEAVY EQUIP. FROM S.C.A.	RWP NO. 1182
	DATE: 9-29-02
	TIME: 1600

MAP/DRAWING

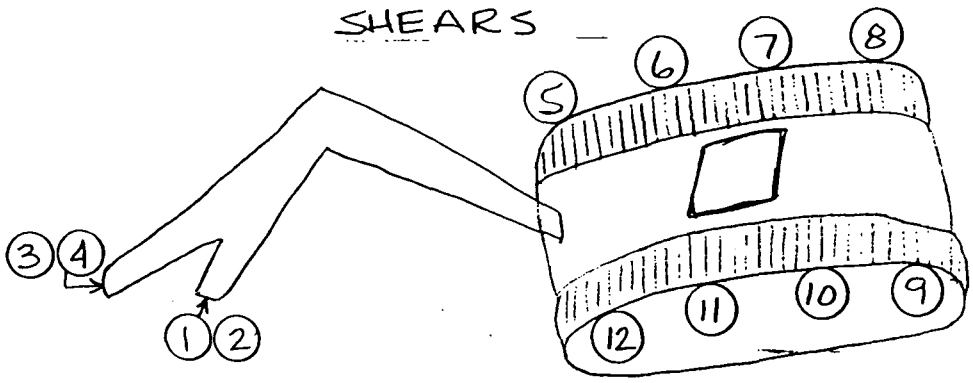

NOTE: INTEGRATED COUNT PERFORMED IF ALPHA AUDIBLE DETECTED.

DIRECT FRISK RESULTS INDICATE:

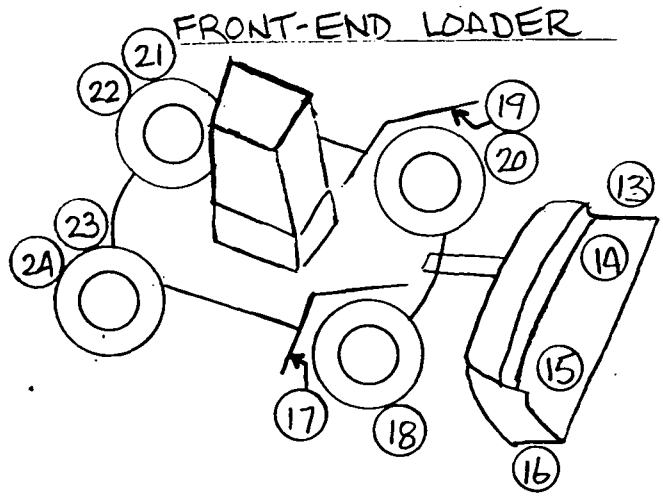

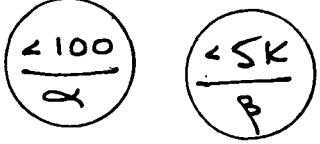

LEGEND: # = mrem/hr (γ) whole body

= mrem/hr neutron

= swipe number

= air sample number

#/α or/β = direct cont. measurement in dpm/100cm²

INSTRUMENTS USED

Instrument	Serial Number	Cal. Due Date
2360	5775/5720	9-25-03
	N	
	A	

Completed by: (Signature)	HP # [redacted]	Date: 9-30-02
Completed by: (Print Name) DJ HARVEY		
Counted by: (Signature) SEE	HP #	Date:
Counted by: (Print Name) ATTACHED		
Reviewed/Approved by: (Signature)	[redacted]	Date: 9-30-02
Reviewed/Approved by: (Print Name)		

ML-9620 (2-98)

Survey No. 02-TF-1479

RADIOLOGICAL SURVEY DATA SHEET (cont.)

Removable Contamination				
Swipes (dpm/100cm²)				
Sample #	β/γ	Alpha	Tritium	Comments
1	SEE ATTACHED			SHEARS
2				
3				
4				
5				SHEARS-TRACKS
6				
7				
8				
9				
10				
11				
12				
13				LOADER-BUCKET
14				
15				
16				
17				LOADER-WHEEL WELL
18				WHEEL
19				LOADER-WHEEL WELL
20				WHEEL
21				
22				
23				
24				
		N/A		

Removable Contamination				
Swipes (dpm/100cm²)				
Sample #	β/γ	Alpha	Tritium	Comments
		N/A		

COMMENTS: N/A

NOTES:
1. See MD-80036 10002 for calculations of WB, extremity and skin dose rates.
2. To request RO Count Room analysis for β/γ, alpha or tritium, leave column blank. Mark column N/A if not needed. If count room printout of results are attached, write "see attached" in column.
3. Annotate special sample type (e.g., soil, water), special identifiers or otherwise in Comments. If not needed, mark N/A.

ML-9620A (4-98)

Alpha/Beta Analysis

Unit Type: LB4100/W
Counting Unit ID: Green
Data file name: SMEAR011
Batch Ended: 9/28/2002 16:07
Recalibration Date: 7/8/2004
Serial Number: 64575
Batch ID: HARVEY SUR ~~#02-TF-1478~~ 02-TF-1479 (24)/BH
DGH 9-28-02

Detector ID	Sample ID	Alpha Activity DPM	Alpha Activity σ	Alpha Activity flags	Beta Activity DPM	Beta Activity σ	Beta Activity flags
A1	1	0.0	2.0		1.3	1.9	
A2	2	0.0	2.0		0.0	1.4	
A3	3	0.0	1.9		1.8	2.1	
A4	4	0.0	1.9		0.9	1.7	
B1	5	0.0	2.1		0.0	1.4	
B2	6	0.0	2.2		0.0	1.5	
B3	7	0.0	1.9		1.3	2.2	
B4	8	0.0	2.0		0.0	1.3	
C1	9	0.0	2.0		1.8	2.2	
C2	10	0.0	2.0		0.0	1.3	
C3	11	0.0	1.8		0.9	1.7	
C4	12	0.0	1.8		0.6	1.7	
D1	13	0.0	2.1		0.0	1.4	
D2	14	1.9	2.1		1.2	1.9	
D3	15	3.8	2.8		0.9	1.7	
D4	16	0.0	2.0		0.0	1.3	
A1	17	0.0	2.0		1.3	1.9	
A2	18	0.0	2.0		0.0	1.4	
A3	19	3.3	2.6		0.0	1.3	
A4	20	1.2	1.9		1.9	2.1	
B1	21	0.0	2.1		2.5	2.3	
B2	22	0.0	2.2		0.0	1.5	
B3	23	0.0	1.9		0.0	1.4	
B4	24	0.0	2.0		0.0	1.3	

PGR PGR

Brenda Hodges 9-28-02

(50 of 63)

RADIOLOGICAL SURVEY DATA SHEET

LOCATION: (BLDG./AREA/ROOM) OLD GAS PUMP-110 / O/S	SURVEY NO. 02-TF-1484
PURPOSE: RELEASE OF MATERIALS TO WASTE MGMT. CATCH BASIN (2EA) - BUMPER GUARDS (2EA.)	RWP NO. 1182
	DATE: 9-30-02
	TIME: 1400

1ST CATCH BASIN - (1)-(4)
2ND CATCH BASIN - (5)-(8)

MAP/DRAWING

CATCH BASIN (2EA) & LID (2EA)

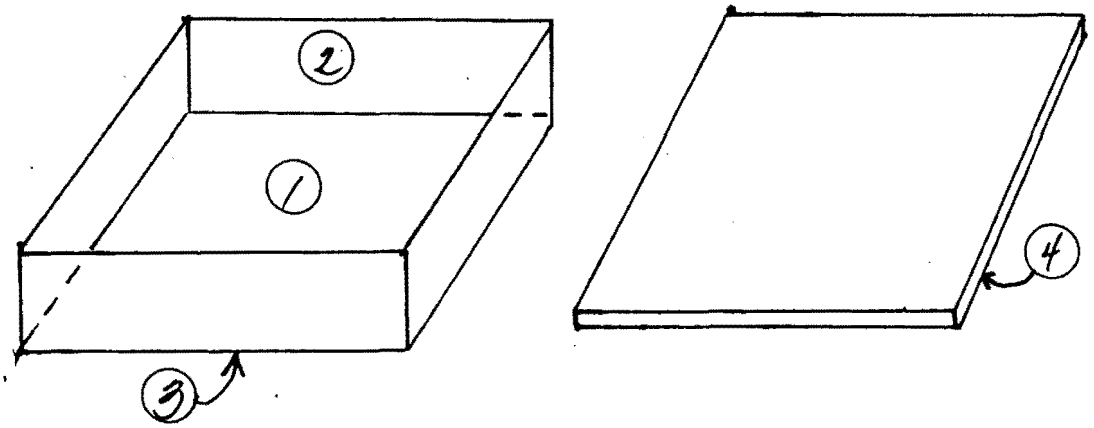

BUMPER GUARDS

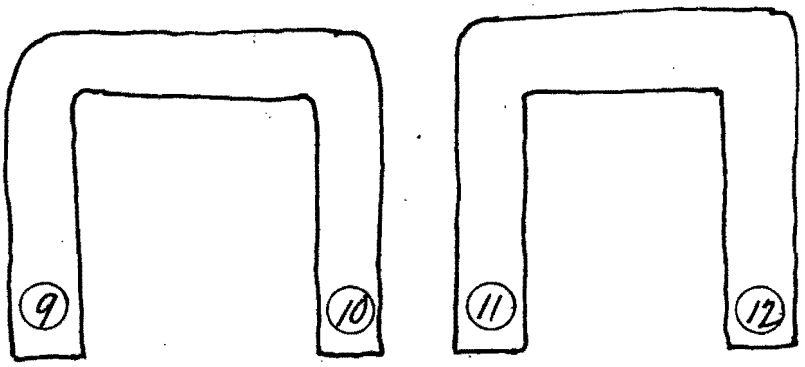

NOTE: INTEGRATED COUNT PERFORMED IF AUDIBLE ALPHA DETECTED. DIRECT FRISK RESULTS INDICATE:

<100 / L <5K / β

LEGEND: # = mrem/hr (γ) whole body
(#) = mrem/hr (γ) exceeding on contact
= mrem/hr neutron
= air sample number
(#) = swipe number
(#/α) = or/β = direct cont. measurement in dpm/100cm²

INSTRUMENTS USED

Instrument	Serial Number	Cal. Due Date
2360	5775/5720	9-25-03
	N	
	A	

Completed by: (Signature) PD Kadley / DJ Harvey	HP # [redacted]	Date: 10-1-02
Completed by: (Print Name) PD KADLEY / DJ HARVEY		
Counted by: (Signature) SEE	HP #	Date:
Counted by: (Print Name) ATTACHED		
Reviewed/Approved by: (Signature)	HP # [redacted]	Date: 10-1-02
Reviewed/Approved by: (Print Name) Collins		

ML-9620 (2-98)

Survey No. 02-TF-1484

RADIOLOGICAL SURVEY DATA SHEET (cont.)

Removable Contamination				
Swipes (dpm/100cm²)				
Sample #	β/γ	Alpha	Tritium	Comments
1	SEE	ATTACHED		CATCH BASIN - I/S
2			NA	- I/S
3				- O/S
4				- LID
5				- I/S
6				- I/S
7				- O/S
8				- UD
9				BUMPER GUARD
10				
11				
12				
			NA	

Removable Contamination				
Swipes (dpm/100cm²)				
Sample #	β/γ	Alpha	Tritium	Comments
			NA	

COMMENTS: NA

NOTES:
1. See MD-80036 10002 for calculations of WB, extremity and skin dose rates.
2. To request RO Count Room analysis for β/γ, alpha or tritium, leave column blank. Mark column N/A if not needed. If count room printout of results are attached, write "see attached" in column.
3. Annotate special sample type (e.g., soil, water), special identifiers or otherwise in Comments. If not needed, mark N/A.

ML-9620A (4-98)

C53 of 63

Smear Analysis

Unit Type: LB4100/W
Counting Unit ID: Green
Data file name: SMEAR013
Batch Ended: 9/30/02 14:11
Cal. Due Date: 4/25/03
Serial Number: 26966-3

Batch ID: 02-TF-1484 RADLEY(12) BSB

BSBrown

Detector ID	Sample ID	Alpha Activity			Beta Activity		
		DPM	σ	flags	DPM	σ	flags
A1	1	3.47	2.98		12.67	4.47	
A2	2	1.58	1.96		1.46	2.08	
A3	3	5.91	3.71		2.49	2.48	
A4	4	3.45	2.87		5.96	3.13	
B1	5	0.00	2.03		0.29	1.77	
B2	6	0.00	2.00		0.00	1.19	
B3	7	1.59	2.17		6.33	3.41	
B4	8	0.00	2.01		0.17	1.64	
C1	9	0.00	2.09		0.51	1.77	
C2	10	0.00	1.87		1.68	2.00	
C3	11	1.66	2.11		1.76	2.16	
C4	12	0.98	2.06		0.00	1.85	

N/A N/A

C54 of 63

RADIOLOGICAL SURVEY DATA SHEET

LOCATION: (BLDG./AREA/ROOM) OLD GAS PUMP-110 / O/S	SURVEY NO. 02-TF-1485
PURPOSE: CONCRETE PILE RELEASE TO WASTE MGMT.	RWP NO. 1182
	DATE: 9-30-02
	TIME: 1400

MAP/DRAWING

NOTE: INTEGRATED COUNT PERFORMED IF AUDIBLE ALPHA DETECTED
DIRECT FRISK RESULTS INDICATE:

$\frac{<100}{\alpha}$ $\frac{<5K}{\beta}$

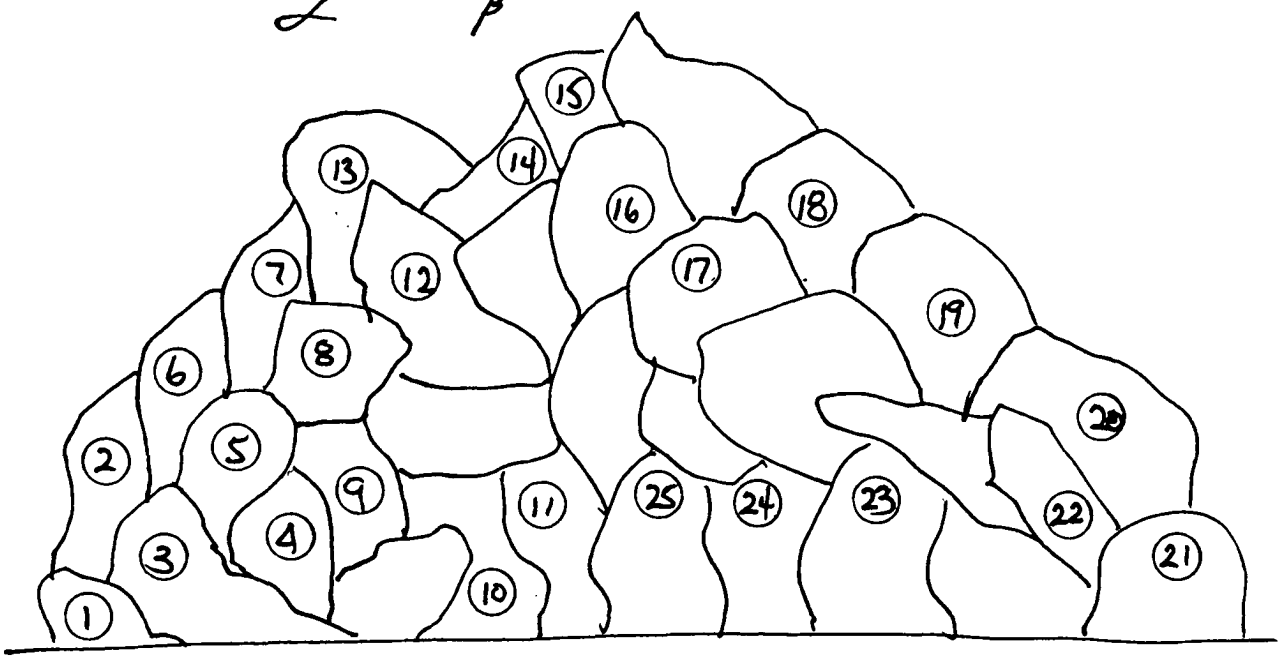

LEGEND: # = mrem/hr (γ) whole body

= mrem/hr neutron

= swipe number

= air sample number

#/α or/β = direct cont. measurement in dpm/100cm²

INSTRUMENTS USED

Instrument	Serial Number	Cal. Due Date
2360	5775/5720	9-25-03
BICRON	3815/3846	1-7-03
	N	A

Completed by: (Signature) PO Radley / D. J. Harvey	HP # [redacted]	Date: 10-1-02
Completed by: (Print Name) PO RADLEY / D. J. HARVEY		
Counted by: (Signature) SEE	HP #	Date:
Counted by: (Print Name) ATTACHED		
Reviewed/Approved by: (Signature)	HP # [redacted]	Date: 10-1-02
Reviewed/Approved by: (Print Name) Collins		

ML-9620 (2-98)

Survey No. 02-TF-1485

RADIOLOGICAL SURVEY DATA SHEET (cont.)

Removable Contamination				
Swipes (dpm/100cm²)				
Sample #	β/γ	Alpha	Tritium	Comments
1	SEE ATTACHED			CONCRETE PIPE
2			N/A	
3				
4				
5				
6				
7				
8				
9				
10				
11				
12				
13				
14				
15				
16				
17				
18				
19				
20				
21				
22				
23				
24				
25				
			N/A	

Removable Contamination				
Swipes (dpm/100cm²)				
Sample #	β/γ	Alpha	Tritium	Comments
			N/A	

COMMENTS: N/A

NOTES:
1. See MD-80036 10002 for calculations of WB, extremity and skin dose rates.
2. To request RO Count Room analysis for β/γ, alpha or tritium, leave column blank. Mark column N/A if not needed. If count room printout of results are attached, write "see attached" in column.
3. Annotate special sample type (e.g., soil, water), special identifiers or otherwise in Comments. If not needed, mark N/A.

ML-9620A (4-98)

Smear Analysis

Unit Type: LB4100/W
Counting Unit ID: Green
Data file name: SMEAR011
Batch Ended: 9/30/02 13:57
Cal. Due Date: 4/25/03
Serial Number: 26966-3

Batch ID: 02-TF-1485 RADLEY(25) BSB

Detector ID	Sample ID	Alpha Activity			Beta Activity		
		DPM	σ	flags	DPM	σ	flags
A1	1	0.00	2.10		5.31	3.14	
A2	2	9.28	4.36		4.45	2.94	
A3	3	0.00	2.18		5.39	3.05	
A4	4	0.00	2.08		7.42	3.36	
B1	5	0.00	2.03		0.29	1.77	
B2	6	1.31	2.00		0.00	1.19	
B3	7	1.59	2.10		0.00	1.29	
B4	8	0.00	2.00		0.00	1.16	
C1	9	0.00	2.13		4.25	2.80	
C2	10	0.00	1.91		5.15	2.84	
C3	11	0.00	2.08		0.00	1.25	
C4	12	0.00	2.06		0.00	1.85	
A1	13	0.00	2.14		9.14	3.86	
A2	14	3.50	2.82		9.70	3.82	
A3	15	1.68	2.23		10.21	3.95	
A4	16	1.47	2.04		3.74	2.64	
B1	17	0.00	2.06		2.79	2.50	
B2	18	0.00	2.00		0.00	1.19	
B3	19	1.59	2.10		0.00	1.29	
B4	20	1.45	2.00		0.00	1.16	
C1	21	0.00	2.10		1.76	2.16	
C2	22	1.32	1.84		0.00	1.16	
C3	23	0.00	2.08		0.00	1.25	
C4	24	0.00	2.09		2.22	2.69	
A1	25	3.47	2.97		11.39	4.27	

C58 of 63

RADIOLOGICAL SURVEY DATA SHEET

1 of 34 JJH 10-1-02

LOCATION: (BLDG./AREA/ROOM) OLD GAS PUMP - 110 / O/S	SURVEY NO. 02-TF-1486
PURPOSE: HEAVY DUTY EQUIPMENT	RWP NO. 1182
	DATE: 10-1-02
RELEASE OF EQUIPMENT FROM SCA	TIME: 0930

MAP/DRAWING

NOTE: INTEGRATED COUNT PERFORMED IF AUDIBLE ALPHA DETECTED. DIRECT FRISK RESULTS INDICATE:

<100/α <5K/β

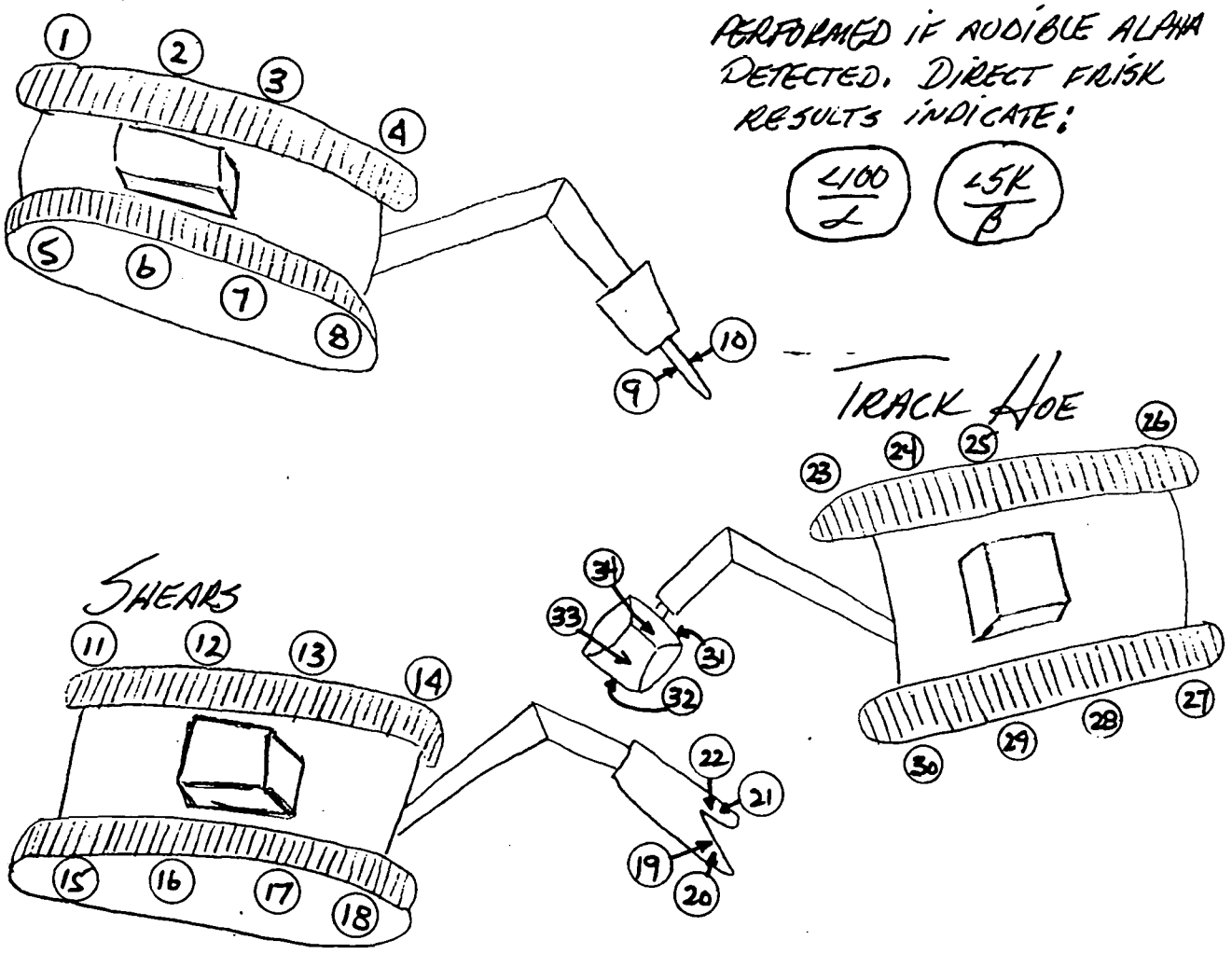

LEGEND: # = mrem/hr (γ) whole body

(#) = mrem/hr neutron

(#) = swipe number

[#] = air sample number

(#/α) or/β = direct cont. measurement in dpm/100cm²

INSTRUMENTS USED

Instrument	Serial Number	Cal. Due Date
2360	5775/5720	9-25-02
	N	
	A	

Completed by: (Signature)	HP # [redacted]	Date: 10-1-02
Completed by: (Print Name) PB RADLEY / D.J. HARLEY		
Counted by: (Signature) SEE	HP #	Date:
Counted by: (Print Name) ATTACHED		
Reviewed/Approved by: (Signature)	HP # [redacted]	Date: 10-1-02
Reviewed/Approved by: (Print Name) COLLAS		

ML-9620 (2-98)

C60 of 63

Survey No. 02-TF-1486

RADIOLOGICAL SURVEY DATA SHEET (cont.)

Removable Contamination				
Swipes (dpm/100cm²)				
Sample #	β/γ	Alpha	Tritium	Comments
1	SEE	ATTACHED		HAMMER
2			N/A	
3				
4				
5				
6				
7				
8				
9				
10				
11				SHEARS
12				
13				
14				
15				
16				
17				
18				
19				
20				
21				
22				
23				TRACK HOE
24				
25				
26				
27				
28				
29				
30				
31				
32				
33				
34				
←			N/A	→

Removable Contamination				
Swipes (dpm/100cm²)				
Sample #	β/γ	Alpha	Tritium	Comments
			N/A	

COMMENTS: N/A

NOTES:
1. See MD-80036 10002 for calculations of WB, extremity and skin dose rates.
2. To request RO Count Room analysis for β/γ, alpha or tritium, leave column blank. Mark column N/A if not needed. If count room printout of results are attached, write "see attached" in column.
3. Annotate special sample type (e.g., soil, water), special identifiers or otherwise in Comments. If not needed, mark N/A.

ML-9620A (4-98)

Smear Analysis

Unit Type: LB4100/W
Counting Unit ID: Green
Data file name: SMEAR016
Batch Ended: 10/1/02 7:59
Cal. Due Date: 4/25/03
Serial Number: 26966-3

02-TF-1486

Batch ID: 02-TF-1486 HARVEY(34) BSB

Detector ID	Sample ID	Alpha Activity DPM	Alpha Activity σ	Alpha Activity flags	Beta Activity DPM	Beta Activity σ	Beta Activity flags
A1	1	1.44	2.08		2.61	2.56	
A2	2	1.58	2.01		6.25	3.19	
A3	3	3.79	3.06		7.59	3.52	
A4	4	0.00	2.04		3.88	2.65	
B1	5	9.57	4.54		3.24	2.80	
B2	6	1.31	2.01		0.13	1.69	
B3	7	1.59	2.11		0.00	1.81	
B4	8	0.00	2.01		0.17	1.64	
C1	9	1.56	2.09		0.36	1.77	
C2	10	0.00	1.95		8.62	3.49	
C3	11	0.00	2.08		0.00	1.25	
C4	12	2.91	2.84		0.82	2.44	
A1	13	9.57	4.63		10.94	4.27	
A2	14	0.00	2.02		7.60	3.41	
A3	15	0.00	2.20		6.63	3.29	
A4	16	7.42	4.01		2.14	2.36	
B1	17	0.00	2.09		6.54	3.32	
B2	18	1.31	2.01		0.13	1.69	
B3	19	0.00	2.11		0.08	1.81	
B4	20	1.45	2.01		0.03	1.64	
C1	21	0.00	2.09		0.51	1.77	
C2	22	1.31	1.89		2.67	2.32	
C3	23	0.00	2.08		0.00	1.25	
C4	24	0.00	2.07		0.00	2.16	
A1	25	3.47	2.95		7.57	3.63	
A2	26	3.50	2.79		6.10	3.18	
A3	27	3.79	3.02		0.15	1.75	

PGR

PGR

C62 of 63

Smear Analysis

02-TF-1486

Unit Type: LB4100/W
Counting Unit ID: Green
Data file name: SMEAR016
Batch Ended: 10/1/02 7:59
Cal. Due Date: 4/25/03
Serial Number: 26966-3

Batch ID: 02-TF-1486 HARVEY(34) BSB

Detector ID	Sample ID	Alpha Activity			Beta Activity		
		DPM	σ	flags	DPM	σ	flags
A4	28	3.45	2.83		0.06	1.67	
B1	29	0.00	2.07		4.04	2.80	
B2	30	0.00	2.03		1.49	2.06	
B3	31	0.00	2.11		0.08	1.81	
B4	32	1.45	2.03		2.35	2.33	
C1	33	0.00	2.12		3.01	2.50	
C2	34	0.00	1.87		1.68	2.00	

PGR PGR

C63263