RF/RMRS-99-452.UN

Rocky Mountain Remediation Services, L.L.C.

779 Closure Project

BUILDING 779 CLUSTER CLOSURE PROJECT

Non-Radiological Closeout Report for the A-Annex

Revision 0
November 3, 1999

Rocky Mountain
Remediation Services, L.L.C.

JUL 2000
RECEIVED
RECORDS CENTER

REVIEWED FOR CLASSIFICATION
By
Date 11/3/99

Best Available Copy

ADMIN RECORD

1/254

BUILDING 779
NON-RADIOLOGICAL CLOSEOUT REPORT
for the A-Annex

Revision 0
November 1999

This Non-Radiological Closeout Report has been reviewed and approved by:

Kathy Zbryk — 11/3/99
Kathy Zbryk, Environmental Scientist, B779 (RMRS) — **Date**

11-3-99
R. Steve Luker, Quality Assurance, B779 (RMRS) — **Date**

for MEH — 11/3/99
Mark E. Hickman, Integration Manager, B779 (RMRS) — **Date**

for HE — 11-3-99
Mark Zachary, Industrial Safety & Hygiene, B779 (RMRS) — **Date**

11/3/99
Thomas Dieter, Project Manager, B779 (RMRS) — **Date**

2

TABLE OF CONTENTS

1.0 INTRODUCTION 4
1.1 Purpose 4
1.2 Scope 4

2.0 REMOVAL OF CONTAMINANTS OF CONCERN (COCs) 4
2.1 Asbestos 4
2.2 Beryllium 6
2.3 Polychlorinated Biphenyl (PCBs) 6
2.4 Solid Material Containing Regulated Levels of RCRA Metals 6
2.5 RCRA Regulated Waste Chemicals 7
2.6 RCRA Units 8
2.7 Staining Inspection 8
2.8 Quality Assurance 8

3.0 CONCLUSION 8

4.0 REFERENCES 9

5.0 VISUAL CHECKSHEET AND RESULTS 10

APPENDICES

A Maps Depicting the Building 779 A-Annex Area

B Asbestos Results

C Beryllium Results

D RCRA Hazardous Substances Results (Solids)

E RCRA Hazardous Substances Results (Chemicals)

F Waste and Environmental Management System Area Location Report, Temporary Units

G Building 779 Glovebox Removal Checklist, RCRA Units

TABLES

2.1 Asbestos Data, Building 779 A-Annex

3

1.0 INTRODUCTION

1.1 Purpose

The purpose of this Report is to provide the information required by the 779 Cluster Closure Project Non-Radiological Closeout Plan for the A-Annex Area of Building 779. Additionally, this document provides characterization information that supports the RFETS' decision to demolish the Building 779 A-Annex Area.

1.2 Scope

The scope of this document is to provide information appropriate to the Building 779 A-Annex Area. The scope includes a summary of the applicable information and survey data that has been conducted since the Reconnaissance Level Characterization Report was issued. This information demonstrates that all contaminants of concern (COCs) within the A-Annex Area of Building 779 have been identified, removed, or remediated to a level below regulated levels. Building 779 will be demolished in sections; the A-Annex is the second section to be demolished (See Maps in Appendix A). Non-Radiological Closeout Reports for final portions (B-Annex and Main Building) of Building 779 and other buildings within the 779 Cluster will be covered by separate reports.

Radiological closeout activities are not addressed in this plan. Refer to RF/RMRS-97-123.UN *"Closeout Radiological Survey Plan for the Building 779 Cluster"*, Rev. 2, June 1999 for information concerning radiological surveys.

2.0 Removal of Contaminants of Concern (COCs)

The following sections discuss the current status of COCs within the A-Annex Area of Building 779. Each section also discusses what actions were taken to remove/abate the COCs.

2.1 Asbestos

The following paragraphs identify the amount of asbestos initially identified in the A-Annex Area and the actions taken to abate the identified asbestos. Each area designated in **Table 2.1,** *Asbestos Data, Building 779 A-Annex Area*, as an abatement area was visually inspected and aggressively cleared according to requirements in CCR #8, Part B, Asbestos. An independent laboratory performed analysis of air samples by Phase Contrast Microscopy (PCM). In the event that PCM analysis exceeded 0.1 f/cc (fibers per cubic centimeter) on any sample, additional analysis by Transmission Electron Microscope (TEM) on all samples in the batch would be performed. There were no excedences of 0.1 f/cc for PCM data obtained in the A-Annex; therefore, no TEM analysis was required.

A-Annex Area

This area includes Rooms 143 through 157, 159, 160, 160A, 161, 162, 163, 163A, 164, 165, 166, 167, 167A and the northern portion of the east loading dock. The A-Annex Area asbestos abatement required the removal of approximately 2,677 square feet of floor tile and mastic, 1,930 square feet of drywall, tape and joint compound, 1,988 linear feet of insulation on pipes, and approximately 138 square feet of duct/pipe/wall penetration filler.

Asbestos abatement for each area was accomplished within a negative pressure secondary containment connected to a HEPA-filtered ventilation system. The insulation was abated using glove bags and/or wrap/cut operations. Abatement of A-Annex was performed in stages due to access priorities and began on April 8, 1999 and was completed on August 14, 1999. Based on the results of a visual inspection and analytical results from thirty-seven air samples, the A-Annex Area was cleared, in total, for normal occupancy on August 14, 1999. The air clearance samples for all rooms where asbestos was abated are summarized below (Table 2.1) and the results are documented in Appendix B.

TABLE 2.1
Asbestos Data, Building 779 A-Annex Area

ROOM NUMBER(S)	PCM SAMPLES	TEM SAMPLES	DATE CLEARED
143, 144, 145, 146, 147, 148, 149 Hall, 151 (cleared with 236 and 237); 148 Airlock	3	0	7/26/99 6/17/99
149 Hallway, West End	5	0	4/27/99
149 East Hall, 156,161,163,164,166	4	0	7/1/99
150	3	0	4/29/99
150 North Wall			7/28/99
152, 154	3	0	4//22/99 4/20/99
153, 155	3	0	4/20/99 4/21/99
157	3	0	4/16/99
159	2	0	4/8/99
160, 160A	3	0	8/2/99
162	3	0	8/14/99
163A, 165, 167, 167A,	3	0	7/1/99
164/165 Airlocks			7/14/99

2.2 Beryllium

The beryllium analytical method and control limit changed during FY99. At the beginning of FY99, beryllium was controlled to a housekeeping limit of 25 $\mu g/ft^2$ Beryllium smears were being analyzed at RFETS on the Beryllium Activation Swipe Tester (BEAST). The Site beryllium equipment-release limit was established at 0.2 $\mu g/100\ cm^2$ on September 30, 1998. After this date, smear samples were sent to an off-site laboratory that could analyze to the lower level. The RFETS analytical method is incapable of analyzing to the lower 0.2 $\mu g/100\ cm^2$ limit.

During completion of the stripout activities in the A-Annex Area, the 779 Closure Project Beryllium Assessment Plans were used to identify the personnel monitoring and beryllium exposure controls that were used. Beryllium parts were stored and processed in the A-Annex during the facility's operation. Therefore, a significant number of beryllium swipes were taken in this area. The equipment and components identified as beryllium-contaminated (above the DOE free-release criteria of 0.2 $\mu g/100\ cm^2$) were removed from the facility and packaged as low-level waste. Protective material such as tent and tent airlock floor coverings were treated in the same manner as equipment. When the tents and tent airlocks were removed, the entire floor area was re-sampled (i.e., Room 150 floor was re-sampled August 10, 1999 after removal of tent and airlock). Building surfaces identified as being beryllium-contaminated were decontaminated and re-sampled to verify that the surface was less than 0.2 $\mu g/100\ cm^2$. Results of the A-Annex Area beryllium analyses are included as Appendix C. Beryllium samples were managed using the chain-of–custody process.

2.3 Polychlorinated Biphenyl (PCBs)

No areas within the A-Annex of Building 779 required sampling for PCBs per the 779 Cluster Reconnaissance Level Characterization Report. The A-Annex Area light ballasts were inspected prior to removal and handled as either TSCA, non-hazardous or low level (TSCA or non-hazardous) waste based on results of this inspection.

2.4 Solid Material Containing Regulated Levels of RCRA Metals

An analysis of materials that fall within this category were evaluated as part of a Site-wide lead-based paint evaluation and included Building 779 Cluster. The analysis is discussed below. The result of this evaluation was used to make decisions about the A-Annex Area.

Painted surfaces are the only material of potential concern in this category. Characterization of lead-based paints is required for worker protection under OSHA's Lead Abatement Program and for hazardous waste characterization in

accordance with 6 CCR 1007-3, Part 261.64. Consequently, both Inductively Coupled Plasma (ICP) and Toxicity Characteristic Leaching Procedure (TCLP) analyses were performed on paint within the 779 Cluster. Based on ICP data, all of the painted surfaces within the 779 Cluster were treated as containing lead for the purposes of personnel protection. For the purpose of this report, only TCLP data is considered (Appendix D) because the hazardous waste determination for the A-Annex Area is derived from TCLP data even though an ICP summary is included.

RFETS personnel have evaluated different types of surfaces painted with lead-based paints and other paint containing heavy metals (cadmium, chromium). The RFETS evaluation concluded that, in general, the painted surfaces at RFETS are non-hazardous waste forms. This determination was based upon hundreds of samples taken throughout RFETS. As part of a continuing characterization, 52 samples (including duplicates; see Appendix D) from the 779 Cluster were analyzed for heavy metals using the TCLP. Each paint sample was of a unique paint color and/or combination of paint colors. These samples consisted of paint chips rather than the total media (cinder block, concrete, and paint) so that a conservative characterization would result. The sample result ranges for the RCRA metals of concern are as follows:

- Cd (.06-0.1857 mg/l;)
- Cr (.15 – 2.2 mg/l) (Excluding one sample from a painted metal door in Room 218)
- Pb (.24 - 3.6 mg/l; Excluding Room 160 which is discussed below)

The characterization results demonstrate that the building debris is non-hazardous with respect to painted surfaces, based on TCLP analysis. Even though there are two TCLP analysis results that indicated some leachability, the non-hazardous determination is based on an interpretation from EPA guidance and the RFETS' Environmental Leadership Team.

The two results above regulatory threshold values for TCLP analysis were:

1. Paint on one metal door (chromium level of 19.7 mg/l; sample identification number 779-980416-MS-023).
2. Paint sampled from Room 160 in Building 779 (lead levels of 11.9 mg/l; sample identification number 779-0980416-MS-039). Painted surfaces in Room 160 have been scarified (all paint has been removed) and the entire waste matrix (paint and substrate) has been physically removed from the facility.

2.5 RCRA Regulated Waste Chemicals

Chemicals were stored in gloveboxes, hoods, and flame-proof cabinets within the A-Annex rooms throughout the use of the facility for research and development. All of the chemicals, oils, and solvents have been removed from these rooms. Appendix E identifies the results of sampling that was performed on chemicals in the A-Annex Area. Currently no hazardous waste chemicals are located in the A-Annex Area.

2.6 RCRA Units

There was a permitted RCRA unit in the A-Annex. Glovebox 860, RCRA Unit 90.43, was closed by removal and placed into waste crates number S00283 and S00357 in accordance with the 779 DOP, Closure Description Document. Appendix G, *Building 779 Glovebox Removal Checklist, RCRA Units*, documents the removal of Glovebox 860, RCRA Unit 90.43.

Two RCRA temporary units and one TSCA 30-day storage unit existed in the A-Annex; they were Units 779-2445 (Rooms 150, 152, and 155), 779-2503 (Room 160), and 779-2524 (Room 152). These units were inactivated in accordance with Site procedures. (Documentation in Appendix F)

2.7 Staining Inspection

A visual inspection of the A-Annex Area is provided under Section 5. No unusual staining or odors were identified in the A-Annex Area.

2.8 Quality Assurance

The sampling, analysis, and data for this report was obtained in accordance with the Quality Assurance Program used by RFETS Analytical Services. Consequently, Quality Assurance requirements described in Section 5 of the Building 779 Non-Radiological Closeout Plan were met.

3.0 CONCLUSION

In conclusion, waste chemicals, and hazardous and toxic contaminants, introduced into Building 779, A-Annex Area, have been removed or reduced to levels that are no longer hazardous or toxic. The release criteria identified in Section 2.0 of this report were accomplished through the building stripout process. Physical evaluation of the building and sampling were performed to confirm that Building 779, A-Annex Area, meets the release criteria in support of facility demolition.

4.0 REFERENCES

4.1 *Rocky Flats Cleanup Agreement (RFCA)*

4.2 *Decommissioning Operations Plan for the 779 Cluster Interim Measure/Interim Remedial Action*, Rev. 0, February 1998

4.3 *Reconnaissance Level Characterization Plan for the 779 Cluster*, Rev. 0, December 17, 1997

4.4 *Reconnaissance Level Characterization Report for the 779 Cluster*, Rev. 0, December 17, 1997

4.5 *Asbestos Characterization Report for the 779 Cluster Project*, Rev. 0, October 1997

4.6 *Lead/Metals in Paint Characterization For Building 779 Cluster*, Rev. 0, August 6, 1998

4.7 *Radiological Closeout Survey Plan for the Building 779 Cluster*, Rev. 2, June 1999

4.8 Procedure DA-GR01-v1-1, *Analytical Services General Guidelines for Data Verification and Validation*

4.9 29 CFR 1926.1101, Colorado Regulation 8, Asbestos

4.10 PCBs - 40 CFR 761; EPA 560/5/86-017; SW-846 Method 4020 Screening for PCBs by Immunoassay; Method 8082, PCBs by Gas Chromatography; disposal requirements - 40CF Part 761.62.

4.11 6 CCR 1007-3, Part 262.11, *Hazardous Waste Determination*, and 40 CFR 268. SW-846

4.12 Toxicity Characteristic Leaching Procedure, EPA SW 846 Method 1311.

4.13 MAN-071-IWCP, *Integrated Work Control Program Manual*

5.0 Visual Inspection Check Sheet

779 CLUSTER CLOSURE PROJECT
NON-RADIOLOGICAL CLOSEOUT
VISUAL INSPECTION CHECK SHEET

AREA/ROOMS INSPECTED:

A Annex including Rooms 143 through 157, 159, 160, 160A, 161, 162, 163, 163A, 164 through 167, 167A and the north side of the east loading dock.

INSPECTION CATEGORY	YES	NO	COMMENTS
STAINING OBSERVED	X		See attached page.
UNUSUAL ODOR PRESENT		X	No odors detected.
SPECIFIED COMPONENTS REMOVED	X		See attached page.

ACTIONS REQUIRED:

None.

PERFORMED BY: Kathy Zbryk DATE: 11-2-99

11-2-99

VISUAL INSPECTION RESULTS

Staining Observed

The visual inspection completed for the A-Annex Area in Building 779 identified the following:

1. There is an oil stain in the NW corner of the East Dock. The oil was from a vacuum pump that was removed as part of the facility stripout. The oil was previously sampled and analyzed. The oil sample results demonstrated that the oil was not hazardous. No further action is required.
2. There is some oil staining on the floor in Room 150 (NE and NW corners) from the electron beam welders. The oil from this equipment was previously sampled and analyzed. The oil sample results demonstrated that the oil was not hazardous. No further action is required.

Specified Components Removed:

The area has been cleaned and all components have been removed in accordance with the Non-Radiological Closeout Plan and in support of the radiological closeout survey. Some conduit and piping remains and will be removed from the building rubble during demolition. Sheetrock has been removed in order to complete the final radiological closeout survey. There is a small amount of sheetrock in the 149 stairwell that will remain and will be stockpiled with the building rubble.

Painted surfaces, primarily black water sealant, remain in the A-Annex Area. The water sealant has been sampled and contains no hazardous constituents. Other paint exists to a lesser extent and may contain lead, the building rubble matrix is considered non-leachable as discussed in the text of this document. Floors and ceilings in Rooms 152,153, 153A, 153B, 154, 155, 157, 160, 160A have been scarified.

Metal support beams, and the corrugated metal from the east dock, will be removed from the building rubble and recycled. All hazardous chemicals have been removed from the facility.

11

Appendix A

Maps Depicting the Building 779 A-Annex Area

BUILDING 779 FIRST FLOOR - Area Location Map

October 5, 1999

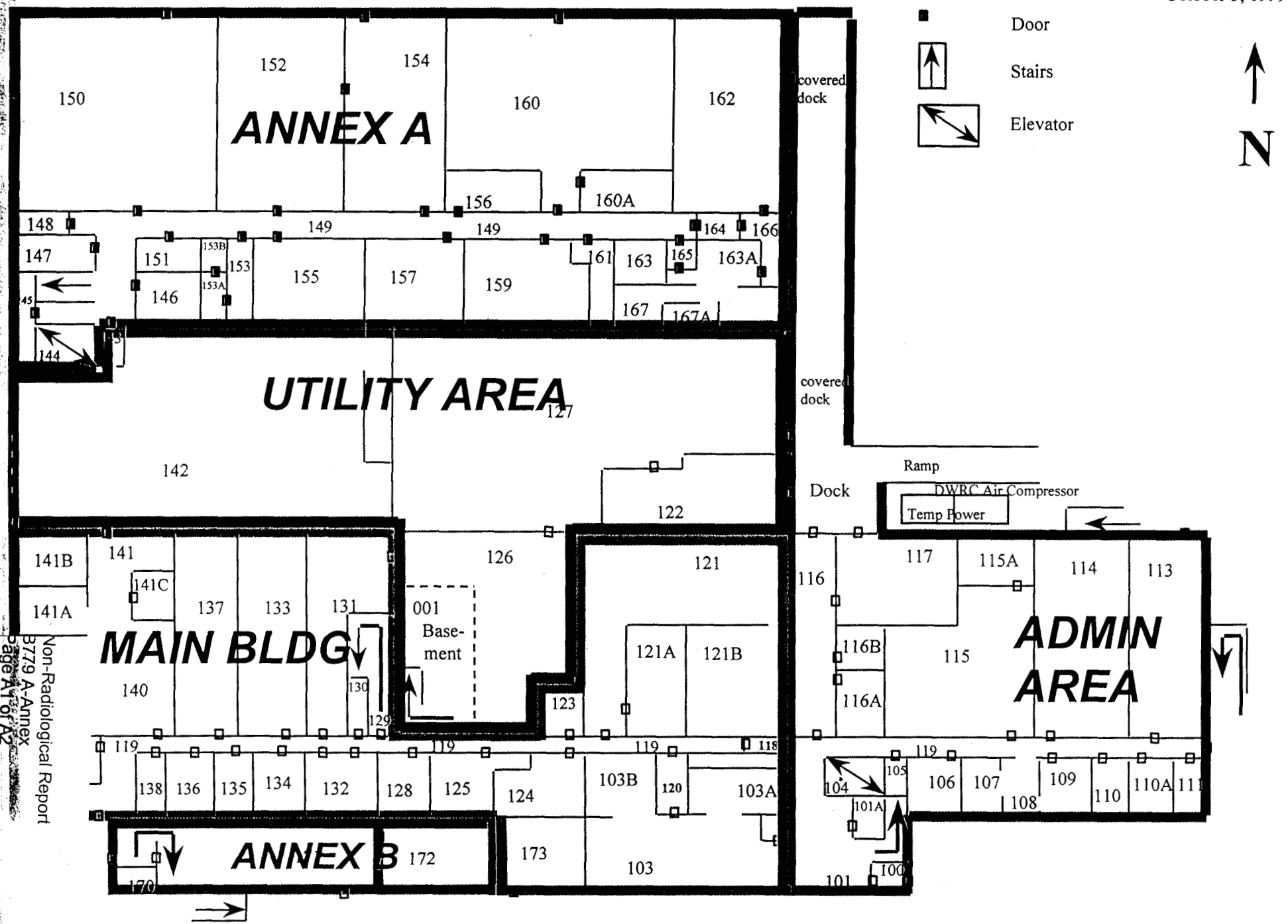

October 5, 1999

BUILDING 779 SECOND FLOOR - Area Location Map

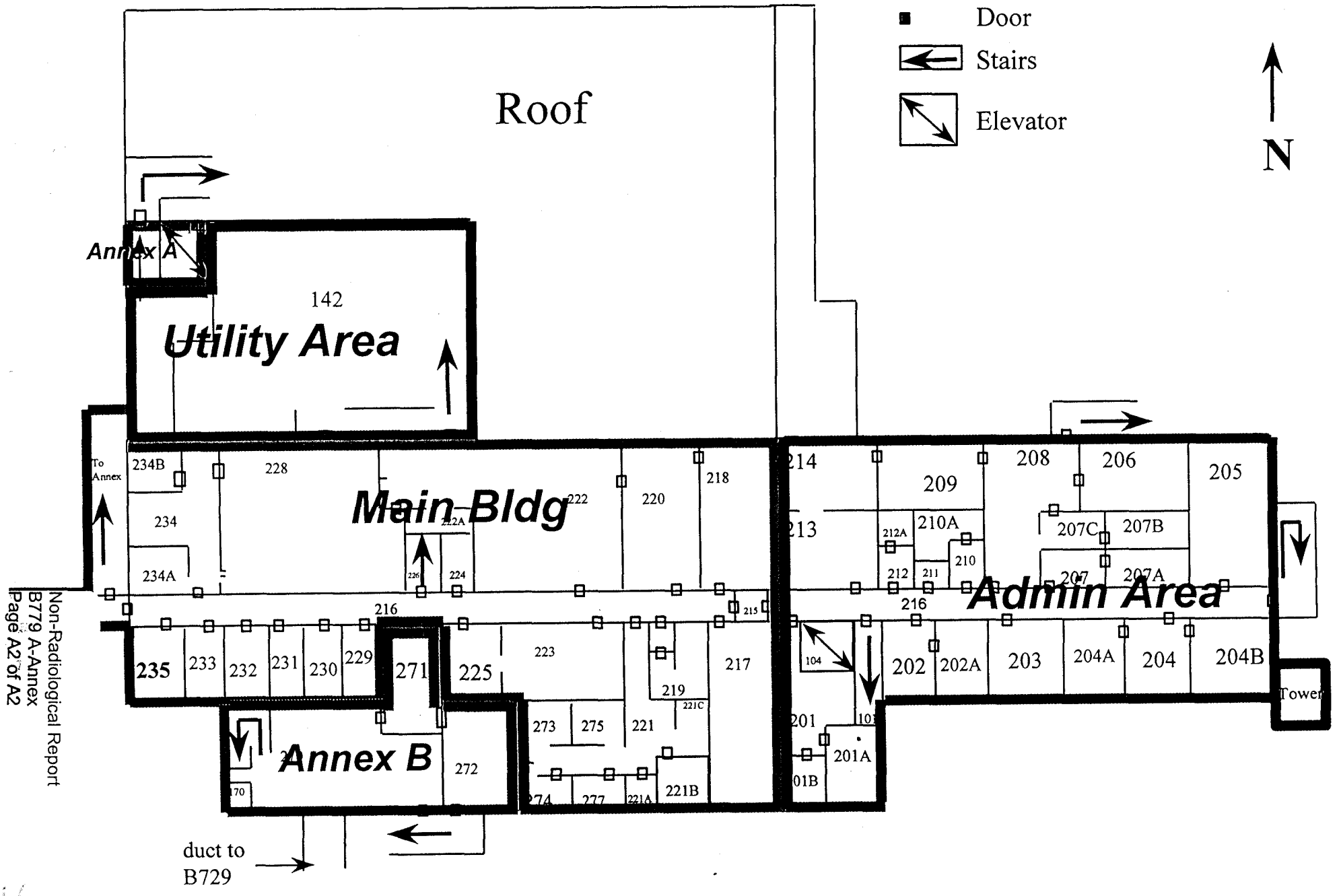

14

Appendix B

Asbestos Results

RESERVOIRS ENVIRONMENTAL SERVICES, INC.

AIHA Certificate of Accreditation #480, Lab ID 10768

TABLE I. NIOSH 7400 FIBER COUNT ANALYSIS

RES Job Number: RES 61978-1
Client: Kaiser-Hill Analytical Services Division
Client Project: 99Z9025, 799 R 149 W
Date Samples Received: July 26, 1999
Analysis Type: PCM 7400 A, Issue 2, Air
Turnaround: 2 Hour

Client ID Number	Lab ID Number	Air Volume Sampled (L)	Fields Analyzed	Fiber Count	Fiber Density (F/mm²)	Limit of Detection (F/cc)	Fiber Concentration (F/cc)
799-990726-MS-001	EM 423932	1330	100	4.0	BDL	0.002	BDL
799-990726-MS-002	EM 423933	1333	100	5.0	BDL	0.002	BDL
799-990726-MS-003	EM 423934	1331	100	6.5	8.3	0.002	0.002
799-990726-MS-004	EM 423935	1330	100	3.5	BDL	0.002	BDL
799-990726-MS-005	EM 423936	1331	100	2.0	BDL	0.002	BDL
799-990726-MS-006	EM 423937	0	100	ND	BDL	---	---
799-990726-MS-007	EM 423938	0	100	ND	BDL	---	---

Field Area = 0.00785 sq mm Filter area = 385 sq mm
Note: Estimated Limit of Detection for 7400 Method is 7 F/sq mm
NA = Not Analyzed ND = None Detected BDL = Below Detection Limit
Referenced Interlaboratory Sr, s = 0.45 CBR = Cannot Be Read, see Table II

GT
Data QA

Rm 149 W
236
237

16

RFP F 3791.32 (7/95)
Formerly RF-47530

Rocky Flats Environmental Technology Site
Golden, CO 80402-0464
Safety and Hygiene Chain of Custody Record and Analysis Request

KES 61978

Name of Originator: Schluterbusch Title: IAM/AO Rm 149(W) Bldg/Ext: T130J/4215 Date: 7/26/99 Page 1 of 1

SAMPLE NUMBER Bldg/Y/M/D/P#/S#	ANALYZE FOR	VOLUME liters	SAMPLE TIME/	MEDIA	P A B	Personal Area Bulk	REMARKS	Lab Number
779-990726-MS-001	IH02.B002	1330			A		TEM -001 thru -005 if	
-002	PCM Asbestos	1333			A		one is ≥ .01 f/cc PCM	
-003		1331			A			
-004		1330			A			
-005		1331			A			
-006		~~0~~			A			
-007		~~0~~			A			

MS 7/26/99

Relinquished by	Received by	Time/Date	Relinquished by	Received by	Time/Date
	[signature]	7/26/99 6:50pm			
Relinquished by	Received by	Time/Date	Relinquished by	Received by	Time/Date
Relinquished by	Received by	Time/Date	Relinquished by	Received by	Time/Date
Relinquished by	Received by	Time/Date	Relinquished by	Received by	Time/Date

Report and Billing Instruction

Hill ☐ Verbal To: Schluterbusch
☑ Fax To: 966-2864
☐ Report To: K-H
p ☐ Bill To: K-H
☐ P.O.#/Release: KT95AA00
Lab: Reserving

Analysis Request

Industrial Hygiene Sample
☐ Standard Service ☐ Rush ☐ Other
Asbestos Samples
☐ Standard Service ☐ 24 Rush ☑ 2 Rush ☐ Other

Seal# (Release #) 9929025
Condition of Seal: ☐ Broken ☒ Unbroken
Signature: [signature]
Comments: Page Mike @ 543-5230

White - Return to Originator Yellow - Lab Copy Green - Sample Custodian Blue - Originator

Includes 143, 144, 145, 146, 147, 148, 151, 148 Air/bc

RESERVOIRS ENVIRONMENTAL SERVICES, INC.

AIHA Certificate of Accreditation #480, Lab ID 10788

TABLE I. NIOSH 7400 FIBER COUNT ANALYSIS

RES Job Number: **RES 59521-1**
Client: **Kaiser-Hill Company, LLC**
Client Project: **9927049, Mike Schluterbusch**
Date Samples Received: **April 27, 1999**
Analysis Type: **PCM 7400 A, Air**
Turnaround: **2 Hour**

Client ID Number	Lab ID Number	Air Volume Sampled (L)	Fields Analyzed	Fiber Count	Fiber Density (F/mm²)	Limit of Detection (F/cc)	Fiber Concentration (F/cc)
779-990427-MS-001	EM 401062	1292	100	1.5	BDL	0.002	BDL
779-990427-MS-002	EM 401063	1298	100	2.0	BDL	0.002	BDL
779-990427-MS-003	EM 401064	1300	100	1.0	BDL	0.002	BDL
779-990427-MS-004	EM 401065	0	100	ND	BDL	---	---
779-990427-MS-005	EM 401066	0	100	ND	BDL	---	---

Field Area = 0.00786 sq mm Filter area = 385 sq mm
Note: Estimated Limit of Detection for 7400 Method is 7 F/sq mm
NA = Not Analyzed ND = None Detected BDL = Below Detection Limit
Referenced Interlaboratory Sr, s = 0.45 CSR = Cannot Be Read, see Table II

Data QA

RFP.F.3791.32 (7/95)
Formerly RF-47530

Rocky Flats Environmental Technology Site

Golden, CO 80402-0464

Safety and Hygiene Chain of Custody Record and Analysis Request

Name of Originator: M Schlutenbach Title: IAM/AO Rm149 (H) Bldg/Ext: T130J/4215 Date: 4/27/99 Page 1 of 1

SAMPLE NUMBER Bldg/Y/M/D/P#/S#	ANALYZE FOR	VOLUME liters	SAMPLE TIME/	MEDIA	P A B	Personal Area Bulk	REMARKS	Lab Number
225-990427-MS-001	IH02B002	1292			A		TEM ALL if one	
-002		1298			A			
-003		1300			A		≥ .01 f/cc PCM	
-004		↓			A			
-005		↓			A			

Relinquished by	Received by	Time/Date	Relinquished by	Received by	Time/Date
[signature]	[signature]	1430 4/27/99			
Relinquished by	Received by	Time/Date	Relinquished by	Received by	Time/Date
quished by	Received by	Time/Date	Relinquished by	Received by	Time/Date
quished by	Received by	Time/Date	Relinquished by	Received by	Time/Date

Report and Billing Instruction

- ☐ Verbal To: M Schlutenbach
- ☐ Fax To: 966-2864
- ☐ Report To: K-H
- ☐ Bill To: K-H
- ☐ P.O.#/Release: KT95AA00
- Lab: Rcs

Analysis Request

Industrial Hygiene Sample: ☐ Standard Service ☐ Rush ☐ Other

Asbestos Samples: ☐ Standard Service ☐ 24 Rush ☐ 2 Rush ☐ Other

Seal# (Release #) 9927049

Condition of Seal: ☐ Broken ☐ Unbroken

Signature:

Comments: Page Mike @ 543-5230

White - Return to Originator Yellow - Lab

Non-Radiological Report
B779 A-Annex
Page B4 of B26
Ka
RM
SSC
Dyn
WS

RESERVOIRS ENVIRONMENTAL SERVICES, INC.

AIHA Certificate of Accreditation #480, Lab ID 10768

TABLE I. NIOSH 7400 FIBER COUNT ANALYSIS

RES Job Number:	RES 61431-1
Client:	Kaiser-Hill Company, LLC
Client Project:	99Z8349, 149ECL, M. Schluterbusch
Date Samples Received:	July 01, 1999
Analysis Type:	PCM 7400 A, Issue 2, Air
Turnaround:	2 Hour

Client ID Number	Lab ID Number	Air Volume Sampled (L)	Fields Analyzed	Fiber Count	Fiber Density (F/mm²)	Limit of Detection (F/cc)	Fiber Concentration (F/cc)
779-990701-MS-006	EM 419428	1351	100	6.0	7.6	0.002	0.002
779-990701-MS-007	EM 419429	1348	100	6.5	8.3	0.002	0.002
779-990701-MS-008	EM 419430	1367	100	8.5	10.8	0.002	0.003
779-990701-MS-009	EM 419431	1358	100	7.5	9.6	0.002	0.003
779-990701-MS-010	EM 419432	0	100	ND	BDL	---	---
779-990701-MS-011	EM 419433	0	100	ND	BDL	---	---

Field Area = 0.00785 sq mm Filter area = 385 sq mm

Note: Estimated Limit of Detection for 7400 Method is 7 F/sq mm

NA = Not Analyzed ND = None Detected BDL = Below Detection Limit

Referenced Interlaboratory Sr, s = 0.45 CBR = Cannot Be Read, see Table II

Data QA

149E

Includes 154, 161, 163, 164, 166

20

RFP F 3791.32 (7/95)
Formerly RF-47530

Rocky Flats Environmental Technology Site

Golden, CO 80402-0464

Safety and Hygiene Chain of Custody Record and Analysis Request

Name of Originator: Schluterbusch Title: IAM/AO Rm149E Bldg/Ext: T730J/4215 Date: 7/1/99 Page 1 of 1

SAMPLE NUMBER Bldg/Y/M/D/P#/S#	ANALYZE FOR	VOLUME liters	SAMPLE TIME/	MEDIA	PAB	Personal Area Bulk	REMARKS	Lab Number
779-990701-MS-006	IH03B002	1351					TEM -001 thru -003 if	
779-990701-MS-007	PCM Asbestos	1340					one is ≥ .01 f/cc	
-008		1367						
-009		1350						
-010								
-011								

Relinquished by	Received by	Time/Date	Relinquished by	Received by	Time/Date
[signature]	[signature]	1550 7/1/99			
Relinquished by	Received by	Time/Date	Relinquished by	Received by	Time/Date
Relinquished by	Received by	Time/Date	Relinquished by	Received by	Time/Date
Relinquished by	Received by	Time/Date	Relinquished by	Received by	Time/Date

Report and Billing Instruction

- -Hill ☐
- ☑
- ☐
- orp ☐
- ☐

Verbal To: Schluterbusch
Fax To: 966-2864
Report To: K-H
Bill To: K-H
P.O.#/Release: KT93AA00
Lab: Resi

Analysis Request

Industrial Hygiene Sample
☐ Standard Service ☐ Rush ☐ Other

Asbestos Samples
☐ Standard Service ☐ 24 Rush ☑ 2 Rush ☐ Other

Seal# (Release #) 9928349
Condition of Seal: ☐ Broken ☐ Unbroken
Signature:
Comments: Page Mike @ 543-5230

White - Return to Originator Yellow - Lab Copy Green - Sample Custodian Blue - Originator

RESERVOIRS ENVIRONMENTAL SERVICES, INC.

AIHA Certificate of Accreditation #480, Lab ID 10768

TABLE I. NIOSH 7400 FIBER COUNT ANALYSIS

RES Job Number: **RES 59612-1**
Client: **Kaiser-Hill Company, LLC**
Client Project: **99Z050, M. Schluterbusch**
Date Samples Received: **April 29, 1999**
Analysis Type: **PCM 7400 A, Air**
Turnaround: **2 Hour**

Client ID Number	Lab ID Number	Air Volume Sampled (L)	Fields Analyzed	Fiber Count	Fiber Density (F/mm²)	Limit of Detection (F/cc)	Fiber Concentration (F/cc)
779-990429-MS-001	EM 402066	1305	100	1.5	BDL	0.002	BDL
779-990429-MS-002	EM 402067	1304	----	CBR	----	----	----
779-990429-MS-003	EM 402068	1465	100	2.0	BDL	0.002	BDL
779-990429-MS-004	EM 402069	0	100	ND	BDL	----	----
779-990429-MS-005	EM 402070	0	100	ND	BDL	----	----

Field Area = 0.00785 sq mm Filter area = 385 sq mm
Note: Estimated Limit of Detection for 7400 Method is 7 F/sq mm
NA = Not Analyzed ND = None Detected BDL = Below Detection Limit
Referenced Interlaboratory Sr, s = 0.45 CBR = Cannot Be Read, see Table II

Data QA

TABLE II. CHARACTERIZATION OF PARTICULATE DEBRIS

Client ID Number	Lab ID Number	Total Debris (%)	Characterization of Particulate Debris: Non-Fibrous QFR	OPQ	GYP	DUST	RESIN	OTHER	Fibrous S	NS	GYP	MIN WOOL	OTHER
779-990429-MS-001	EM 402066	5-10		+		+	+	C		+			
779-990429-MS-002	EM 402067		cassette misloaded, filter under back-up pad										
779-990429-MS-003	EM 402068	1-5		+		+		C		+			
779-990429-MS-004	EM 402069	< 1											
779-990429-MS-005	EM 402070												

+ = Present
A = Abundant
QFR = Quartz/Feldspar/Rock fragments
OPQ = Opaque
GYP = Anhydrite/Gypsum
S = Straight fibers
NS = Non-straight fibers
MIN WOOL = Mineral Wool
SP = Spores
C = Cellulose
P = Pollen
E = Encapsulant
D = Diatoms
Pe = Perlite
St = Starch

22

Rm 150

RFP F 3291.32 (7/95)
Formerly RF-47530

59612

150

Rocky Flats Environmental Technology Site
Golden, CO 80402-0464
Safety and Hygiene Chain of Custody Record and Analysis Request

Name of Originator: Schlutenbeck Title: IAM/AG Rm 150 Bldg/Ext: 7305/4215 Date: 4/29/99 Page 1 of 1

SAMPLE NUMBER Bldg/Y/M/D/P#/S#	ANALYZE FOR	VOLUME liters	SAMPLE TIME/	MEDIA	P A B	Personal Area Bulk	REMARKS	Lab Number
729-990429-MS-001	TH02B002	1305			A		TEM Ash if Ones	
-002		1304			A			
-003	PCM Asbestos	1465			A		2.01 S/cc PCM	
-004		-0-			A			
-005		-0-			A			

Relinquished by	Received by	Time/Date	Relinquished by	Received by	Time/Date
[signature]	[signature]	1430 4/29/99			
Relinquished by	Received by	Time/Date	Relinquished by	Received by	Time/Date
Relinquished by	Received by	Time/Date	Relinquished by	Received by	Time/Date
Relinquished by	Received by	Time/Date	Relinquished by	Received by	Time/Date

Report and Billing Instruction

- Kaiser-Hill ☐
- RMRS. ☐
- SSOC ☐
- DynCorp ☐
- WSI ☐

Verbal To: M Schlutenbeck
Fax To: 966-2864
Report To: K-H
Bill To: K-H
P.O.#/Release: KT55AA00
Lab: Resi

Analysis Request

Industrial Hygiene Sample: ☐ Standard Service ☐ Rush ☐ Other

Asbestos Samples: ☐ Standard Service ☐ 24 Rush ☐ 2 Rush ☐ Other

Seal# (Release #) 9972050
Condition of Seal: ☐ Broken ☐ Unbroken
Signature:
Comments: Page Mike at 543-5230

White - Return to Originator Yellow - Lab Copy Green - Sample Custodian Blue - Originator

23

RESERVOIRS ENVIRONMENTAL SERVICES, INC.

AIHA Certificate of Accreditation #480, Lab ID 10768

TABLE I. NIOSH 7400 FIBER COUNT ANALYSIS

RES Job Number:	RES 59396-1
Client:	Kaiser-Hill Company, LLC
Client Project:	99Z6831, M. Schluterbusch
Date Samples Received:	April 21, 1999
Analysis Type:	PCM 7400 A, Air
Turnaround:	2 Hour

Client ID Number	Lab ID Number	Air Volume Sampled (L)	Fields Analyzed	Fiber Count	Fiber Density (F/mm²)	Limit of Detection (F/cc)	Fiber Concentration (F/cc)
779-990421-MS-001	EM 399926	1604	100	8.0	10.2	0.002	0.002
779-990421-MS-002	EM 399927	1305	100	5.5	7.0	0.002	0.002
779-990421-MS-003	EM 399928	1619	100	1.0	BDL	0.002	BDL
779-990421-MS-004	EM 399929	0	100	ND	BDL	----	----
779-990421-MS-005	EM 399930	0	100	ND	BDL	----	----

Field Area = 0.00785 sq mm Filter area = 385 sq mm

Note: Estimated Limit of Detection for 7400 Method is 7 F/sq mm

NA = Not Analyzed ND = None Detected BDL = Below Detection Limit

Referenced Interlaboratory Sr, s = 0.45 CBR = Cannot Be Read, see Table II

Data QA

Room 152
154

RFP F 3791.32 (7/95)
Formerly RF-47530

Rocky Flats Environmental Technology Site

Golden, CO 80402-0464

Safety and Hygiene Chain of Custody Record and Analysis Request

Name of Originator: M Schlotzhauer Title: LAM/AO Rm 152 Bldg/Ext: T1305/4215 Date: 4/21/99 Page 1 of 1

SAMPLE NUMBER Bldg/Y/M/D/P#/S#	ANALYZE FOR	VOLUME liters	SAMPLE TIME/	MEDIA	P A B	Personal Area Bulk	REMARKS	Lab Number
779-990421-MS-001	IH~~B~~02B002	1604			H		TEM All if one is	
-002	PCM Asbestos	1305			A		≥ .01 f/cc PCM	
-003		1619			A			
-004		-0-			A			
-005		-0-			A			

Relinquished by	Received by	Time/Date	Relinquished by	Received by	Time/Date
M Schlotzhauer	[illegible]	1445 4/21/99			
Relinquished by	Received by	Time/Date	Relinquished by	Received by	Time/Date
Relinquished by	Received by	Time/Date	Relinquished by	Received by	Time/Date
Relinquished by	Received by	Time/Date	Relinquished by	Received by	Time/Date

Report and Billing Instruction

- ☐ Verbal To: M Schlotzhauer
- ☑ Fax To: 966-2864
- ☐ Report To: K-H
- ☐ Bill To: K-H
- ☐ P.O.#/Release: K-95AA00
- Lab: Rocky Mt

Analysis Request

Industrial Hygiene Sample: ☐ Standard Service ☐ Rush ☐ Other

Asbestos Samples: ☐ Standard Service ☐ 24 Rush ☑ 2 Rush ☐ Other

Seal# (Release #) 9976831

Condition of Seal: ☐ Broken ☐ Unbroken

Signature:

Comments: Page Mike @ 543-5230

White - Return to Originator Yellow - Lab Copy Green - Sample Custodian Blue - Originator

Rm 153
155

RESERVOIRS ENVIRONMENTAL SERVICES, INC.

AIHA Certificate of Accreditation #480, Lab ID 10768

TABLE I. NIOSH 7400 FIBER COUNT ANALYSIS

RES Job Number:	RES 59298-1
Client:	Kaiser-Hill Company, LLC
Client Project:	KT95AA00, 99Z6830, M. Schluterbusch
Date Samples Received:	April 19, 1999
Analysis Type:	PCM 7400 A, Air
Turnaround:	2 Hour

Client ID Number	Lab ID Number	Air Volume Sampled (L)	Fields Analyzed	Fiber Count	Fiber Density (F/mm²)	Limit of Detection (F/cc)	Fiber Concentration (F/cc)
779-990419-MS-001	EM 399386	1290	100	1.0	BDL	0.002	BDL
779-990419-MS-002	EM 399387	1310	100	2.0	BDL	0.002	BDL
779-990419-MS-003	EM 399388	1284	100	2.5	BDL	0.002	BDL
779-990419-MS-004	EM 399389	0	100	ND	BDL	---	---
779-990419-MS-005	EM 399390	0	100	ND	BDL	---	---

Field Area = 0.00785 sq mm Filter area = 385 sq mm

Note: Estimated Limit of Detection for 7400 Method is 7 F/sq mm

NA = Not Analyzed ND = None Detected BDL = Below Detection Limit

Referenced Interlaboratory Sr, s = 0.45 CBR = Cannot Be Read, see Table II

GT
Data QA

Room 153
155

26

RFETS 3791.32 (7/95)
Formerly RF-47530

Rocky Flats Environmental Technology Site
Golden, CO 80402-0464
Safety and Hygiene Chain of Custody Record and Analysis Request

59298 153

Name of Originator: Schlutenbach Title: IAM/AO RM 158 Bldg/Ext: T130B/4215 Date: 4/15/99 Page 1 of 1

SAMPLE NUMBER Bldg/Y/M/D/P#/S#	ANALYZE FOR	VOLUME liters	SAMPLE TIME	MEDIA	P A B	Personal Area Bulk	REMARKS	Lab Number
728-990419-MS-001	TH02B002	1290					TEM All if one is	
-002		1340					≥ .01 f/cc PCM	
-003		1284						
-004		8						
-005		2						

Relinquished by	Received by	Time/Date	Relinquished by	Received by	Time/Date
M Schlutenbach		1740 4/15/99			
Relinquished by	Received by	Time/Date	Relinquished by	Received by	Time/Date
Relinquished by	Received by	Time/Date	Relinquished by	Received by	Time/Date
Relinquished by	Received by	Time/Date	Relinquished by	Received by	Time/Date
				Otto	4/19/99 540pm

Report and Billing Instruction

- ☐ Verbal To: M Schlutenbach
- ☐ Fax To: 966-2864
- ☐ Report To: K-H
- ☐ Bill To: K-H
- ☐ P.O.#/Release: KT95AA00
- Lab: RSI

Analysis Request

Industrial Hygiene Sample: ☐ Standard Service ☐ Rush ☐ Other

Asbestos Samples: ☐ Standard Service ☐ 24 Rush ☑ 2 Rush ☐ Other

Seal# (Release #) 9926830

Condition of Seal: ☐ Broken ☐ Unbroken

Signature:

Comments: Page Mike @ 543-5230

White - Return to Originator Yellow - Lab Copy Green - Sample Custodian Blue - Originator

Non-Radiological Report
B779 A-Annex
Page B12 of B26

27

RESERVOIRS ENVIRONMENTAL SERVICES, INC.

AIHA Certificate of Accreditation #480, Lab ID 10768

TABLE I. NIOSH 7400 FIBER COUNT ANALYSIS

RES Job Number: **RES 59196-1**
Client: **Kaiser-Hill Company, LLC**
Client Project: **99Z6675, Mike Schluterbusch**
Date Samples Received: **April 15, 1999**
Analysis Type: **PCM 7400 A, Air**
Turnaround: **2 Hour**

Client ID Number	Lab ID Number	Air Volume Sampled (L)	Fields Analyzed	Fiber Count	Fiber Density (F/mm²)	Limit of Detection (F/cc)	Fiber Concentration (F/cc)
779-990415-MS-001	EM 398723	1286	100	3.5	BDL	0.002	BDL
779-990415-MS-002	EM 398724	1283	100	5.0	BDL	0.002	BDL
779-990415-MS-003	EM 398725	1293	100	5.5	7.0	0.002	0.002
779-990415-MS-004	EM 398726	0	100	ND	BDL	----	----
779-990415-MS-005	EM 398727	0	100	ND	BDL	----	----

Field Area = 0.00785 sq mm Filter area = 385 sq mm
Note: Estimated Limit of Detection for 7400 Method is 7 F/sq mm
NA = Not Analyzed ND = None Detected BDL = Below Detection Limit
Referenced Interlaboratory Sr, s = 0.45 CBR = Cannot Be Read, see Table II

GT
Date QA

28

RFP F 3791.32 (7/95)
Formerly RF-47530

212-2513

Rocky Flats Environmental Technology Site
Golden, CO 80402-0464
Safety and Hygiene Chain of Custody Record and Analysis Request

59196

Name of Originator: Schlutenbach Title: JAM/AO Rm 157 Bldg/Ext: T13aJ / 4215 Date: 4/15/99 Page 1 of 1

SAMPLE NUMBER Bldg/Y/M/D/P#/S#	ANALYZE FOR	VOLUME liters	SAMPLE TIME/	MEDIA	P A B	Personal Area Bulk	REMARKS	Lab Number
779-990415-MS-001	JH01B002	1286			A		TEM AHA is one is	
-002		1283			A		≥ .01 f/cc PCM	
-003		1293			A			
-004		-0-			B			
-005		-0-			B			
~~-006~~								

Relinquished by	Received by	Time/Date	Relinquished by	Received by	Time/Date
[signature]		1710 4/15/99		[signature]	4/15/99 5:00
Relinquished by	Received by	Time/Date	Relinquished by	Received by	Time/Date
Relinquished by	Received by	Time/Date	Relinquished by	Received by	Time/Date
Relinquished by	Received by	Time/Date	Relinquished by	Received by	Time/Date

Report and Billing Instruction

- ☐ Verbal To: M Schlutenbach
- ☐ Fax To: 966-2864/4305
- ☐ Report To: K-H
- ☐ Bill To: K-H
- ☐ P.O.#/Release: KT95AA00
- Lab: Rocky Mtn

Analysis Request

Industrial Hygiene Sample: ☐ Standard Service ☐ Rush ☐ Other

Asbestos Samples: ☐ Standard Service ☐ 24 Rush ☑ 2 Rush ☐ Other

Seal#-(Release #) 99266725

Condition of Seal: ☐ Broken ☐ Unbroken

Signature:

Comments: Page Mike @ 543-5230

White - Return to Originator Yellow - Lab Copy Green - Sample Custodian Blue - Originator

Non-Radiological Report
B779 A-Annex
Page B14 of B26

Rm 159

RESERVOIRS ENVIRONMENTAL SERVICES, INC.

AIHA Certificate of Accreditation #480, Lab ID 10768

TABLE I. NIOSH 7400 FIBER COUNT ANALYSIS

RES Job Number: RES 58992-1
Client: Kaiser-Hill Company, LLC
Client Project: 99Z6620,
Date Samples Received: April 08, 1999
Analysis Type: PCM 7400 A, Air
Turnaround: 2 Hour

Client ID Number	Lab ID Number	Air Volume Sampled (L)	Fields Analyzed	Fiber Count	Fiber Density (F/mm²)	Limit of Detection (F/cc)	Fiber Concentration (F/cc)
779-990408-MS-001	EM 397046	1244	100	2.5	BDL	0.002	BDL
779-990408-MS-002	EM 397047	1280	100	4.5	BDL	0.002	BDL
779-990408-MS-003	EM 397048	0	100	ND	BDL	---	---
779-990408-MS-004	EM 397049	0	100	ND	BDL	---	---

Field Area = 0.00785 sq mm Filter area = 385 sq mm
Note: Estimated Limit of Detection for 7400 Method is 7 F/sq mm
NA = Not Analyzed ND = None Detected BDL = Below Detection Limit
Referenced Interlaboratory Sr, s = 0.45 CBR = Cannot Be Read, see Table II

GT
Data QA

Rm 159

RFP F 3791.32 (7/95)
Formerly RF-47530

58992

Rocky Flats Environmental Technology Site
Golden, CO 80402-0464
Safety and Hygiene Chain of Custody Record and Analysis Request

Name of Originator: Schlutterbusch Title: IAM / AO Rm 159 Bldg/Ext: T130J / 4215 Date: 4/8/99 Page 1 of 1

SAMPLE NUMBER Bldg/Y/M/D/P#/S#	ANALYZE FOR	VOLUME liters	SAMPLE TIME/	MEDIA	PAB	Personal Area Bulk	REMARKS	Lab Number
779-990408-M5-001	~~1244~~	1247			A		JEM both if one is	
-002	↑	1280			A			
-003	1HOUBC02	—			B		≥ .01 f/cc PCM	
-004	↓	—			B			

Relinquished by	Received by	Time/Date	Relinquished by	Received by	Time/Date
[signature]	[signature]	4/8/99			
Relinquished by	Received by	Time/Date	Relinquished by	Received by	Time/Date
elinquished by	Received by	Time/Date	Relinquished by	Received by	Time/Date
elinquished by	Received by	Time/Date	Relinquished by	Received by	Time/Date

Report and Billing Instruction

- ill ☐ Verbal To: M Schlutterbusch
- ☐ Fax To: 966-2864 / 4308
- ☐ Report To: K-H
- ☐ Bill To: K-11
- ☐ P.O.#/Release: KT95AA00
- Lab: RCS

Analysis Request

Industrial Hygiene Sample: ☒ Standard Service ☐ Rush ☐ Other

Asbestos Samples: ☐ Standard Service ☐ 24 Rush ☑ 2 Rush ☐ Other

Seal# (Release #) 9926620

Condition of Seal: ☐ Broken ☐ Unbroken

Signature:

Comments: Page M Lo @ 543-5230

RESERVOIRS ENVIRONMENTAL SERVICES, INC.

AIHA Certificate of Accreditation #480, Lab ID 10768

TABLE I. NIOSH 7400 FIBER COUNT ANALYSIS

RES Job Number:	RES 62169-1
Client:	Kaiser-Hill Analytical Services Division
Client Project:	9979285, M. Schluterbusch
Date Samples Received:	August 02, 1999
Analysis Type:	PCM 7400 A, Issue 2, Air
Turnaround:	2 Hour

Client ID Number	Lab ID Number	Air Volume Sampled (L)	Fields Analyzed	Fiber Count	Fiber Density (F/mm²)	Limit of Detection (F/cc)	Fiber Concentration (F/cc)
779-990802-MS-001	EM 425356	1335	100	3.5	BDL	0.002	BDL
779-990802-MS-002	EM 425357	1332	100	4.5	BDL	0.002	BDL
779-990802-MS-003	EM 425358	1352	100	ND	BDL	0.002	BDL
779-990802-MS-004	EM 425359	0	100	ND	BDL	----	----
779-990802-MS-005	EM 425360	0	100	ND	BDL	----	----

Field Area = 0.00785 sq mm Filter area = 385 sq mm

Note: Estimated Limit of Detection for 7400 Method is 7 F/sq mm

NA = Not Analyzed ND = None Detected BDL = Below Detection Limit

Referenced Interlaboratory Sr, s = 0.45 CBR = Cannot Be Read, see Table II

RK
Data QA

Rm 160
160A

RFP F 3791.32 (7/95)
Formerly RF-47530

160

Rocky Flats Environmental Technology Site

Golden, CO 80402-0464

Safety and Hygiene Chain of Custody Record and Analysis Request

Name of Originator: Schlotterbeck Title: IAM/AO Rm 160 Bldg/Ext: T130J/4215 Date: 8/2/99 Page 1 of 1

SAMPLE NUMBER Bldg/Y/M/D/P#/S#	ANALYZE FOR	VOLUME liters	SAMPLE TIME/	MEDIA	P A B	Personal Area Bulk	REMARKS	Lab Number
779-990802-M5-001	EH02 B002	1335			A		TEM -001 thru -003 is	
-002	PCM (Asbestos)	1332			A		one is ≥ .01 f/cc PCM	
-003		1352			A			
-004		—			A			
-005		—			A			

MS 8/2/99

Relinquished by	Received by	Time/Date	Relinquished by	Received by	Time/Date
[signature]	RKO	1049 8/2/99			
Relinquished by	Received by	Time/Date	Relinquished by	Received by	Time/Date
Relinquished by	Received by	Time/Date	Relinquished by	Received by	Time/Date
Relinquished by	Received by	Time/Date	Relinquished by	Received by	Time/Date

Report and Billing Instruction

- -Hill ☐ Verbal To: ~~Schlotterbeck~~
- ☑ Fax To: 966-2864
- ☐ Report To: K-H
- orp ☐ Bill To: K-H
- ☐ P.O.#/Release: KT95 AA00
- Lab: Rescucing

Analysis Request

Industrial Hygiene Sample

☐ Standard Service ☐ Rush ☐ Other

Asbestos Samples

☐ Standard Service ☐ 24 Rush ☑ 2 Rush ☐ Other

Seal# (Release #) 9529285

Condition of Seal: ☐ Broken ☐ Unbroken

Signature:

Comments: ~~Page Mike @ 543-5230~~

White - Return to Originator Yellow - Lab Copy Green - Sample Custodian Blue - Originator

RESERVOIRS ENVIRONMENTAL SERVICES, INC.

AIHA Certificate of Accreditation #480, Lab ID 10768

TABLE I. NIOSH 7400 FIBER COUNT ANALYSIS

RES Job Number: RES 62515-1
Client: Kaiser-Hill Analytical Services Division
Client Project: 9979474, 779R162
Date Samples Received: August 14, 1999
Analysis Type: PCM 7400 A, Issue 2, Air
Turnaround: 2 Hour

Client ID Number	Lab ID Number	Air Volume Sampled (L)	Fields Analyzed	Fiber Count	Fiber Density (F/mm²)	Limit of Detection (F/cc)	Fiber Concentration (F/cc)
779-990814-MS-001	EM 427889	1281	100	3.5	BDL	0.002	BDL
779-990814-MS-002	EM 427890	1300	100	2.0	BDL	0.002	BDL
779-990814-MS-003	EM 427891	1316	100	2.5	BDL	0.002	BDL
779-990814-MS-004	EM 427892	0	100	ND	BDL	—	—
779-990814-MS-005	EM 427893	0	100	ND	BDL	—	—

Field Area = 0.00785 sq mm Filter area = 385 sq mm
Note: Estimated Limit of Detection for 7400 Method is 7 F/sq mm
NA = Not Analyzed ND = None Detected BDL = Below Detection Limit
Referenced Interlaboratory Sr, s = 0.45 CBR = Cannot Be Read, see Table II

Data QA

Room 162

RFP F 3791.32 (7/95)
Formerly RF-47530

Rocky Flats Environmental Technology Site

Golden, CO 80402-0464

Safety and Hygiene Chain of Custody Record and Analysis Request

162

Name of Originator: Schlotzbach Title: IAM/AO Rm 162 Bldg/Ext: T130J / 4215 Date: 8/14/99 Page 1 of 1

SAMPLE NUMBER Bldg/Y/M/D/P#/S#	ANALYZE FOR	VOLUME liters	SAMPLE TIME/	MEDIA	P A B	Personal Area Bulk	REMARKS	Lab Number
779-990814-MS-001	IH02B002	1281			A		TEM -001 Air -003 is	
-002		1300			A		one is 2.01 f/cc PCM	
-003		1316			A			
-004		~			A			
-005		~			A			

Relinquished by	Received by	Time/Date	Relinquished by	Received by	Time/Date
[signature]	[signature]	1430 8/14/99			
Relinquished by	Received by	Time/Date	Relinquished by	Received by	Time/Date
Relinquished by	Received by	Time/Date	Relinquished by	Received by	Time/Date
Relinquished by	Received by	Time/Date	Relinquished by	Received by	Time/Date

Report and Billing Instruction

-Hill ☐ Verbal To: Schlotzbach
☒ Fax To: 966-2864
☐ Report To: K-H
rp ☐ Bill To: K-H
☐ P.O.#/Release: KT95AA50
Lab: Rocky Mtn

Analysis Request

Industrial Hygiene Sample
☐ Standard Service ☐ Rush ☐ Other

Asbestos Samples
☐ Standard Service ☐ 24 Rush ☐ 2 Rush ☐ Other

Seal# (Release #) 9929474
Condition of Seal: ☐ Broken ☐ Unbroken
Signature:
Comments: Page Mike @ 543-5230

White - Return to Originator Yellow - Lab Copy Green - Sample Custodian Blue - Originator

RESERVOIRS ENVIRONMENTAL SERVICES, INC.

AIHA Certificate of Accreditation #480, Lab ID 10768

TABLE I. NIOSH 7400 FIBER COUNT ANALYSIS

RES Job Number:	RES 61432-1
Client:	Kaiser-Hill Company, LLC
Client Project:	9928350, 167CL, M. Schluterbusch
Date Samples Received:	July 1, 1999
Analysis Type:	PCM 7400 A, Issue 2, Air
Turnaround:	2 Hour

Client ID Number	Lab ID Number	Air Volume Sampled (L)	Fields Analyzed	Fiber Count	Fiber Density (F/mm²)	Limit of Detection (F/cc)	Fiber Concentration (F/cc)
774-990701-MS-001	EM 419434	1409	100	6.5	8.3	0.002	0.002
774-990701-MS-002	EM 419435	1357	100	2.0	BDL	0.002	BDL
774-990701-MS-003	EM 419436	1371	100	5.0	BDL	0.002	BDL
774-990701-MS-004	EM 419437	0	100	ND	BDL	---	---
774-990701-MS-005	EM 419438	0	100	ND	BDL	---	---

Field Area = 0.00785 sq mm Filter area = 385 sq mm

Note: Estimated Limit of Detection for 7400 Method is 7 F/sq mm

NA = Not Analyzed ND = None Detected BDL = Below Detection Limit

Referenced Interlaboratory Sr, s = 0.45 CBR = Cannot Be Read, see Table II

Date QA

Rm 167, 167A
Includes 163A, 165

36

RFP F 3791.32 (7/95)
Formerly RF-47530

Rocky Flats Environmental Technology Site

Golden, CO 80402-0464

Safety and Hygiene Chain of Custody Record and Analysis Request

Name of Originator: Schluterbusch Title: IAM/AO Rm167 Bldg/Ext: T130J/4215 Date: 7/1/95 Page 1 of 1

SAMPLE NUMBER Bldg/Y/M/D/P#/S#	ANALYZE FOR	VOLUME liters	SAMPLE TIME/	MEDIA	P A B	Personal Area Bulk	REMARKS	Lab Number
779-950704-MS-001	IH03B002	1409			A		TEM-001 thru -003 is	
-002	PCM ASBTS02	1357			A		one is ≥ .01 f/cc	
-003		1371			A			
-004					A			
-005					A			

Relinquished by	Received by	Time/Date	Relinquished by	Received by	Time/Date
[signature]	[signature]	1555 7/1/95			
Relinquished by	Received by	Time/Date	Relinquished by	Received by	Time/Date
linquished by	Received by	Time/Date	Relinquished by	Received by	Time/Date
inquished by	Received by	Time/Date	Relinquished by	Received by	Time/Date

Report and Billing Instruction

- ☐ Verbal To: Schluterbusch
- ☑ Fax To: 966-2864
- ☐ Report To: K-H
- ☐ Bill To: K-H
- ☐ P.O.#/Release: KT95AA00
- Lab: Rocky's

Analysis Request

Industrial Hygiene Sample: ☐ Standard Service ☐ Rush ☐ Other

Asbestos Samples: ☐ Standard Service ☐ 24 Rush ☑ 2 Rush ☐ Other

Seal# (Release #) 9928350

Condition of Seal: ☐ Broken ☐ Unbroken

Signature:

Comments: Page Mike @ 543-5230

Non-Radiological Report
B779 A-Annex
Page B22 of B26

37

Asbestos 779 Report Plan 01

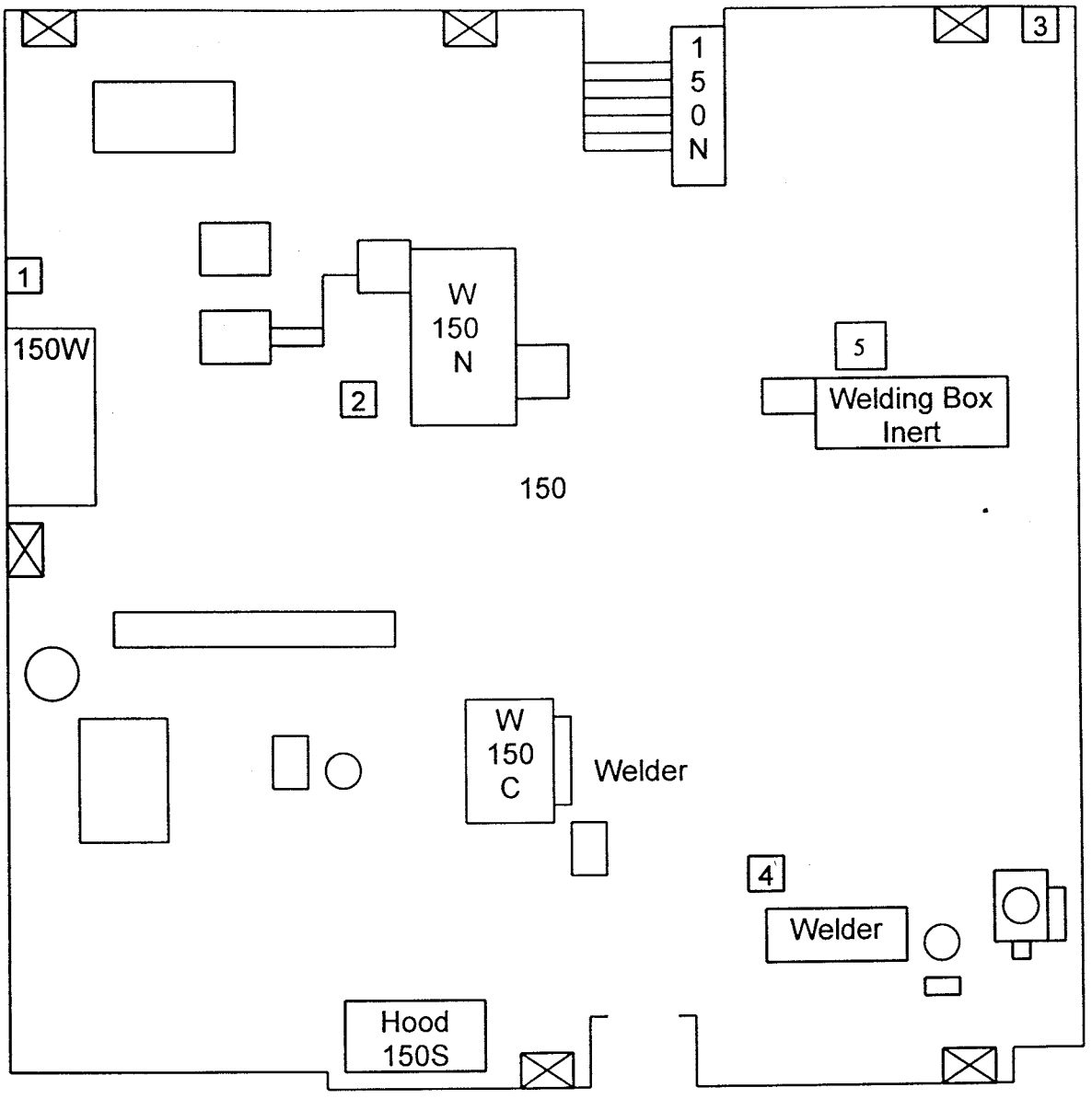

1	779-970515-MS-050	Drywall, tape, J.C. (1%)
2	779-970515-MS-051	Poured flooring (ND)
3	779-970515-MS-052	Drywall, tape, J.C. (TR)
4	779-970515-MS-053	TSI mud PHW pipe (10%)
5	779-970520-MS-060	TSI block G.B. heater (ND)

Asbestos 779 Report Plan 2

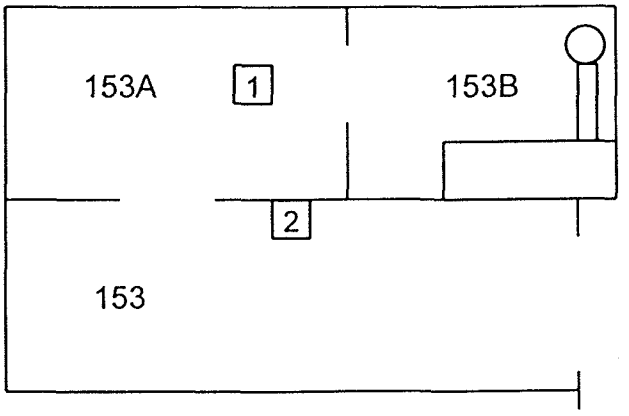

1	779-970522-MS-077	Plaster skin ceiling (ND)
2	779-970522-MS-078	Plaster skin wall (TR)

Asbestos 779 Report Plan 3

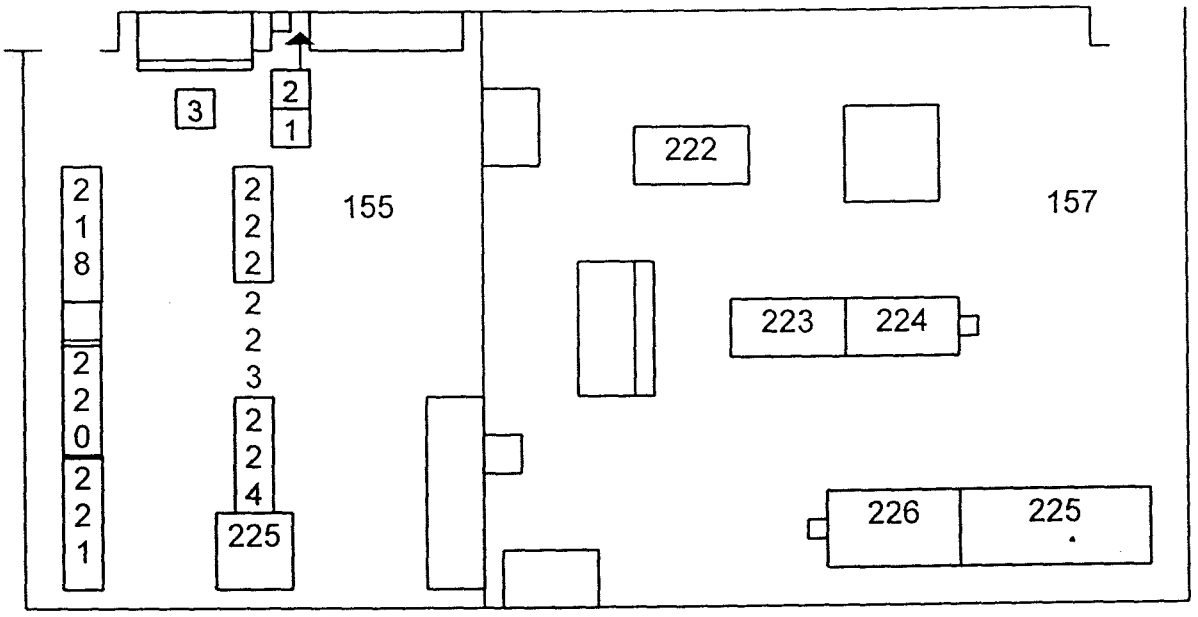

1	779-970520-MS-061	2 x 4 Ceiling tile wht. lng. (ND)
2	779-970520-MS-062	Drywall, tape, J.C. (TR)
3	779-970520-MS-063	Black cove base (TR)

Asbestos 779 Report Plan 4

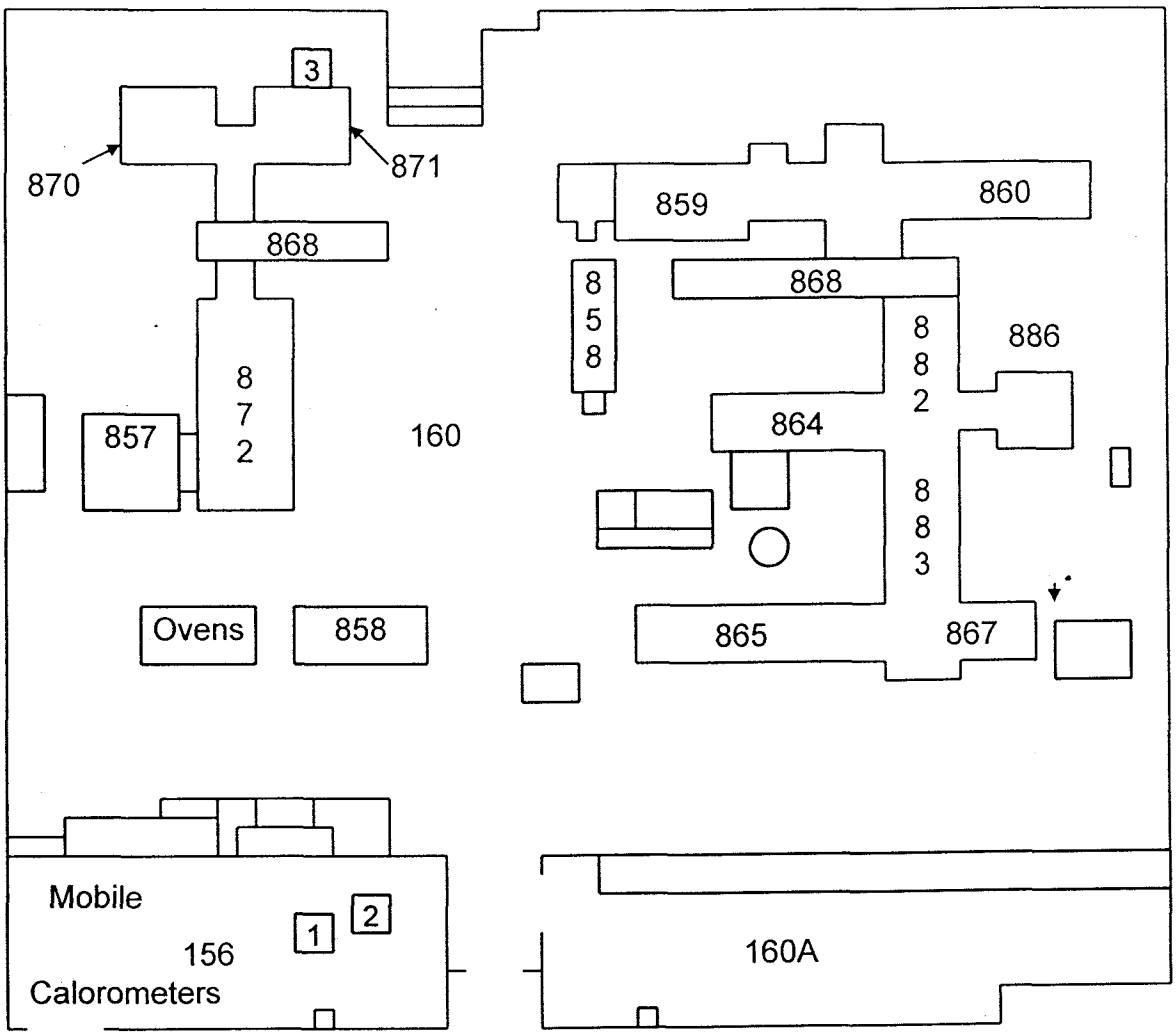

1	779-970515-MS-054	12" White, green mottled foor tile (8%)
2	779-970515-MS-055	6" Brown cove base (ND)
3	779-970515-MS-056	Drywall, tape, J.C. (TR)

Appendix C

Beryllium Results

	A	B	C	D	E	F	G
1	***Room Number***	***Date***	***Sample Number***	***Reporting Limit*** *micro grams/100cm2*	***Location/Description***	***Smear Results*** *micro grams/100cm2*	***Sample Method or RIN#***
142	149	4/28/99	779-99-04-23-13-07	0.1	Floor	<0.1	*
143	149	4/28/99	779-99-04-23-13-08	0.1	Floor	<0.1	*
144	149	4/28/99	779-99-04-23-13-09	0.1	Floor	<0.1	*

* Analysis for Be using NIOSH method 7300 elements by IGP

43

BUILDING 779

BERYLLIUM SMEAR RESULTS

MAIN BUILDING

April 28, 1999

Sample Number	Reporting Limit micro grams	Location Totals micro grams/100cm²
779-99-04-23-13-01	0.1_{ug}	(OH) Pipe Cold Water $<0.1_{ug/100cm^2}$
779-99-04-23-13-02	0.1_{ug}	Floor $<0.1_{ug/100cm^2}$
779-99-04-23-13-03	0.1_{ug}	Floor $<0.1_{ug/100cm^2}$
779-99-04-23-13-04	0.1_{ug}	Floor $<0.1_{ug/100cm^2}$
779-99-04-23-13-05	0.1_{ug}	Step $<0.1_{ug/100cm^2}$
779-99-04-23-13-06	0.1_{ug}	Step $<0.1_{ug/100cm^2}$
779-99-04-23-13-07	0.1_{ug}	Floor $<0.1_{ug/100cm^2}$
779-99-04-23-13-08	0.1_{ug}	Floor $<0.1_{ug/100cm^2}$
779-99-04-23-13-09	0.1_{ug}	Floor $<0.1_{ug/100cm^2}$

149

[1] See attached map of building 779 first floor for approximate smear locations. Follow up surveys for B

BUILDING 779 FIRST FLOOR - Area Location Map

January 14, 1999

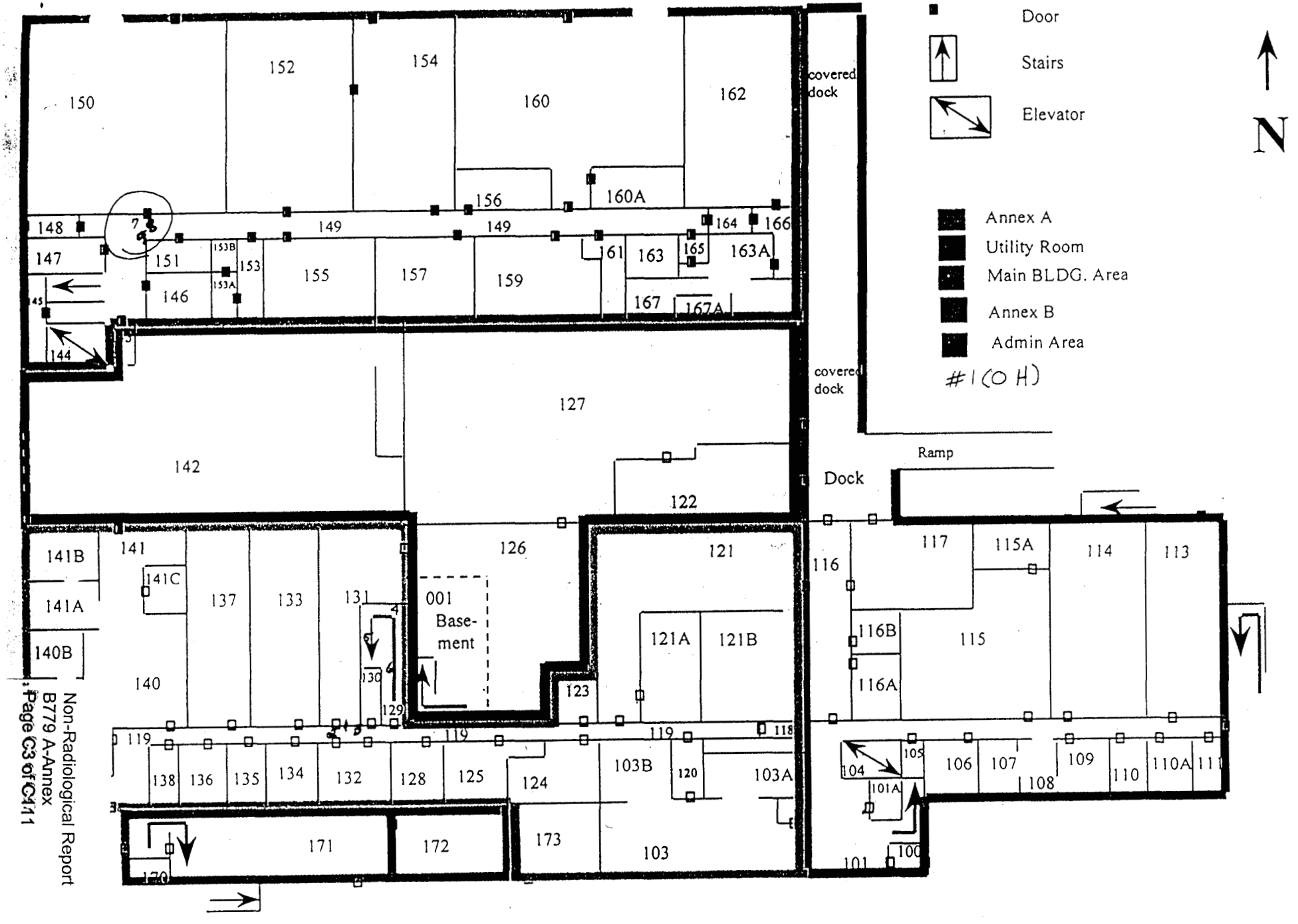

45

	A	B	C	D	E	F	G
1	Room Number	Date	Sample Number	Reporting Limit micro grams/100cm2	Location/Description	Smear Results micro grams/100cm2	Sample Method or RIN#
145	150	3/12/98	779-98-3-13-001	NA	Pigma Welder North Side	0.04	98D1366
146	150	3/12/98	779-98-3-13-002	NA	Pigma Welder North Side	0.04	98D1366
147	150	3/12/98	779-98-3-13-003	NA	Pigma Welder North Side	0.04	98D1366
148	150	3/12/98	779-98-3-13-004	NA	Pigma Welder North Side	0.04	98D1366
149	150	3/12/98	779-98-3-13-005	NA	Pigma Welder South Side	0.04	98D1366
150	150	3/12/98	779-98-3-13-006	NA	Pigma Welder South Side	0.04	98D1366
151	150	3/12/98	779-98-3-13-007	NA	Pigma Welder South Side	0.04	98D1366
152	150	3/12/98	779-98-3-13-008	NA	Pigma Welder South Side	0.04	98D1366
153	150	3/12/98	779-98-3-13-009	NA	Pigma Welder East Side	0.04	98D1366
154	150	3/12/98	779-98-3-13-010	NA	Pigma Welder East Side	0.04	98D1366
155	150	3/12/98	779-98-3-13-011	NA	Pigma Welder West Side	0.04	98D1366
156	150	3/12/98	779-98-3-13-012	NA	Pigma Welder west side inside door	0.04	98D1366
157	150	3/12/98	779-98-3-13-013	NA	Pigma Welder Floor inside welder	0.04	98D1366
158	150	3/12/98	779-98-3-13-014	NA	Pigma Welder inside north wall	0.04	98D1366
159	150	3/12/98	779-98-3-13-015	NA	Pigma Welder inside south wall	0.30	98D1366
160	150	3/12/98	779-98-3-13-016	NA	Pigma Welder inside top	0.04	98D1366
161	150	3/12/98	779-98-3-13-017	NA	Pigma Welder inside wall	0.10	98D1366
162	150	3/31/98	779-98-F-001	NA	Floor south doorway	0.04	98D1608
163	150	3/31/98	779-98-F-002	NA	Floor Southeast	0.04	98D1608
	150	3/31/98	779-98-F-003	NA	Floor east middle	0.04	98D1608
	150	3/31/98	779-98-F-004	NA	Floor northeast	0.04	98D1608
	150	3/31/98	779-98-F-005	NA	Floor north middle	0.04	98D1608
	150	3/31/98	779-98-F-006	NA	Floor east of Hood 150W	0.04	98D1608
	150	3/31/98	779-98-F-007	NA	Floor east of electrical Panel	0.04	98D1608
	150	3/31/98	779-98-F-008	NA	Floor North of Hood 150S	0.04	98D1608
	150	3/31/98	779-98-F-009	NA	Floor southwest corner	0.05	98D1608
	150	3/31/98	779-98-E-010	NA	Equip hi-voltage power source west wall	0.05	98D1608
	150	3/31/98	779-98-E-011	NA	Equipment Welder south side of room	0.04	98D1608
	150	3/31/98	779-98-E-012	NA	Equipment Welder south side of room	0.04	98D1608
	150	3/31/98	779-98-E-013	NA	Equipment Welder north side of room	0.11	98D1608

.alysis for Be using NIOSH method 7300 elements by IGP

46

	A	B	C	D	E	F	G
1	Room Number	Date	Sample Number	Reporting Limit micro grams/100cm2	Location/Description	Smear Results micro grams/100cm2	Sample Method or RIN#
175	150	3/31/98	779-98-E-014	NA	Equipment Welder north side of room	0.43	98D1608
176	150	3/31/98	779-98-E-015	NA	Equipment Welder north side of room	0.28	98D1608
177	150	3/31/98	779-98-E-016	NA	Equipment Welder north side of room	1.80	98D1608
178	150	3/31/98	779-98-OH-017	NA	Overhead southeast corner	0.27	98D1608
179	150	3/31/98	779-98-OH-018	NA	Overhead southwest corner	0.09	98D1608
180	150	3/31/98	779-98-OH-019	NA	Overhead northeast corner	0.04	98D1608
181	150	3/31/98	779-98-OH-020	NA	Overhead northwest corner	0.23	98D1608
182	150	4/13/99	779-99-04-06-13-01	0.1	EB Welder Internal	2.50	*
183	150	4/13/99	779-99-04-06-13-02	0.1	EB Welder Internal	0.30	*
184	150	4/13/99	779-99-04-06-13-03-	0.1	EB Welder Internal	4.80	*
185	150	4/13/99	779-99-04-06-13-04	0.1	EB Welder Internal	5.20	*
186	150	4/13/99	779-99-04-06-13-05	0.1	EB Welder Internal	2.00	*
187	150	4/23/99	779-99-04-13-150-01	0.1	Floor	<0.1	*
188	150	4/23/99	779-99-04-13-150-02	0.1	Floor	<0.1	*
189	150	4/23/99	779-99-04-13-150-03	0.1	Floor	<0.1	*
190	150	4/23/99	779-99-04-13-150-04	0.1	Floor	<0.1	*
191	150	4/23/99	779-99-04-13-150-05	0.1	Floor	<0.1	*
192	150	4/23/99	779-99-04-13-150-06	0.1	Floor	<0.1	*
193	150	4/23/99	779-99-04-13-150-07	0.1	Floor	<0.1	*
	150	4/23/99	779-99-04-13-150-08	0.1	Floor	<0.1	*
	150	4/23/99	779-99-04-13-150-09	0.1	Floor Plastic Sheet	<0.1	*
	150	4/23/99	779-99-04-13-150-010	0.1	Floor Plastic Sheet	<0.1	*
	150	4/23/99	779-99-04-13-150-011	0.1	Floor	<0.1	*
	150	4/23/99	779-99-04-13-150-012	0.1	Floor	<0.1	*
	150	4/23/99	779-99-04-13-150-013	0.1	Floor	<0.1	*
	150	4/23/99	779-99-04-13-150-014	0.1	Floor	<0.1	*
	150	4/23/99	779-99-04-13-150-015	0.1	Floor	<0.1	*
	150	4/23/99	779-99-04-13-150-016	0.1	Floor	<0.1	*
	150	5/15/99	779-99-05-10-13-150-01	0.1	Floor	<0.1	*
	150	5/15/99	779-99-05-10-13-150-02	0.1	Floor	<0.1	*

Analysis for Be using NIOSH method 7300 elements by IGP

	A	B	C	D	E	F	G
1	Room Number	Date	Sample Number	Reporting Limit micro grams/100cm2	Location/Description	Smear Results micro grams/100cm2	Sample Method or RIN#
205	150	5/15/99	779-99-05-10-13-150-03	0.1	Floor	<0.1	*
206	150	5/15/99	779-99-05-10-13-150-04	0.1	Floor	<0.1	*
207	150	5/15/99	779-99-05-10-13-150-05	0.1	Floor	<0.1	*
208	150	5/15/99	779-99-05-10-13-150-06	0.1	Floor	<0.1	*
209	150	5/15/99	779-99-05-10-13-150-07	0.1	Floor	<0.1	*
210	150	5/15/99	779-99-05-10-13-150-08	0.1	Floor	<0.1	*
211	150	5/15/99	779-99-05-10-13-150-09	0.1	Floor	<0.1	*
212	150	5/15/99	779-99-05-10-13-150-010	0.1	Floor	<0.1	*
213	150	5/20/99	779-99-05-07-13-150-01	0.1	Floor	1.40	*
214	150	5/20/99	779-99-05-07-13-150-03	0.1	Floor	<0.1	*
215	150	5/20/99	779-99-05-07-13-150-04	0.1	Floor	<0.1	*
216	150	5/20/99	779-99-05-07-13-150-05	0.1	Floor	<0.1	*
217	150	6/11/99	779-99-05-17-13-150-01	0.1	Lead Pipe Scrap	0.60	*
218	150	6/11/99	779-99-05-17-13-150-02	0.1	Lead Pipe Scrap	1.00	*
219	150	6/11/99	779-99-05-17-13-150-03	0.1	Lead Pipe Scrap	1.20	*
220	150	6/11/99	779-99-05-17-13-150-04	0.1	Lead Pipe Scrap	0.40	*
221	150	6/11/99	779-99-05-17-13-150-05	0.1	Lead Pipe Scrap	0.50	*
222	150	6/11/99	779-99-05-17-13-150-06	0.1	EB Welder Internal	1.60	*
	150	6/11/99	779-99-05-17-13-150-07	0.1	EB Welder Internal	0.40	*
	150	6/11/99	779-99-05-17-13-150-08	0.1	EB Welder Internal	0.40	*
	150	6/11/99	779-99-05-17-13-150-09	0.1	EB Welder Internal	0.30	*
	150	6/11/99	779-99-05-17-13-150-010	0.1	EB Welder Internal	0.50	*
	150	6/11/99	779-99-05-17-13-150-011	0.1	EB Welder Internal	27.00	*
	150	6/11/99	779-99-05-17-13-150-012	0.1	X-Ray Equipment Shielding	0.30	*
	150	6/11/99	779-99-05-17-13-150-013	0.1	X-Ray Equipment Shielding	0.50	*
	150	6/11/99	779-99-05-17-13-150-014	0.1	X-Ray Equipment Shielding	<0.1	*
	150	6/11/99	779-99-05-17-13-150-015	0.1	EB Welder Door South	0.90	*
	150	6/11/99	779-99-05-17-13-150-016	0.1	EB Welder Door South	0.30	*
	150	6/11/99	779-99-05-17-13-150-017	0.1	EB Welder Door North	14.00	*
	150	6/11/99	779-99-05-17-13-150-018	0.1	Motor/Pump External	1.40	*

* Analysis for Be using NIOSH method 7300 elements by IGP

48

	A	B	C	D	E	F	G
1	Room Number	Date	Sample Number	Reporting Limit micro grams/100cm2	Location/Description	Smear Results micro grams/100cm2	Sample Method or RIN#
235	150	6/11/99	779-99-05-17-13-150-019	0.1	Motor/Pump External	1.50	*
236	150	6/11/99	779-99-05-17-13-150-020	0.1	Motor/Pump Internal	8.80	*
237	150	6/11/99	779-99-05-17-13-150-021	0.1	Cart Table Top	0.20	*
238	150	6/11/99	779-99-05-17-13-150-022	0.1	Cart Under Table	0.60	*
239	150	6/11/99	779-99-05-17-13-150-023	0.1	Cart Under Table	2.50	*
240	150	6/11/99	779-99-05-17-13-150-024	0.1	Tent Floor by Exhaust	7.20	*
241	150	6/11/99	779-99-05-17-13-150-025	0.1	Tent Floor by North Wall	5.70	*
242	150	6/11/99	779-99-05-17-13-150-026	0.1	Tent Floor by Welder	1.70	*
243	150	6/11/99	779-99-05-17-13-150-027	0.1	Tent Floor by Welder	5.00	*
244	150	6/11/99	779-99-05-17-13-150-028	0.1	Tent Floor	1.30	*
245	150	6/11/99	779-99-05-17-13-150-029	0.1	Tent Floor	0.60	*
246	150	6/11/99	779-99-05-17-13-150-030	0.1	Floor Personnel Airlock	<0.1	*
247	150	8/10/99	779-99-06-03-13-150-01	0.1	Floor	<0.1	*
248	150	8/10/99	779-99-06-03-13-150-02	0.1	Floor	<0.1	*
249	150	8/10/99	779-99-06-03-13-150-03	0.1	Floor	<0.1	*
250	150	8/10/99	779-99-06-03-13-150-04	0.1	Floor	<0.1	*
	150	8/10/99	779-99-06-03-13-150-05	0.1	Floor	<0.1	*
	150	8/10/99	779-99-06-03-13-150-06	0.1	Floor	<0.1	*
	150	8/10/99	779-99-06-03-13-150-07	0.1	Floor	<0.1	*
	150	8/10/99	779-99-06-03-13-150-08	0.1	Floor	<0.1	*
	150	8/10/99	779-99-06-03-13-150-09	0.1	Floor	<0.1	*
	150	8/10/99	779-99-06-03-13-150-010	0.1	Floor	<0.1	*

* Analysis for Be using NIOSH method 7300 elements by IGP

49

RADIOLOGICAL OPERATIONS

Drawing Showing Survey Points

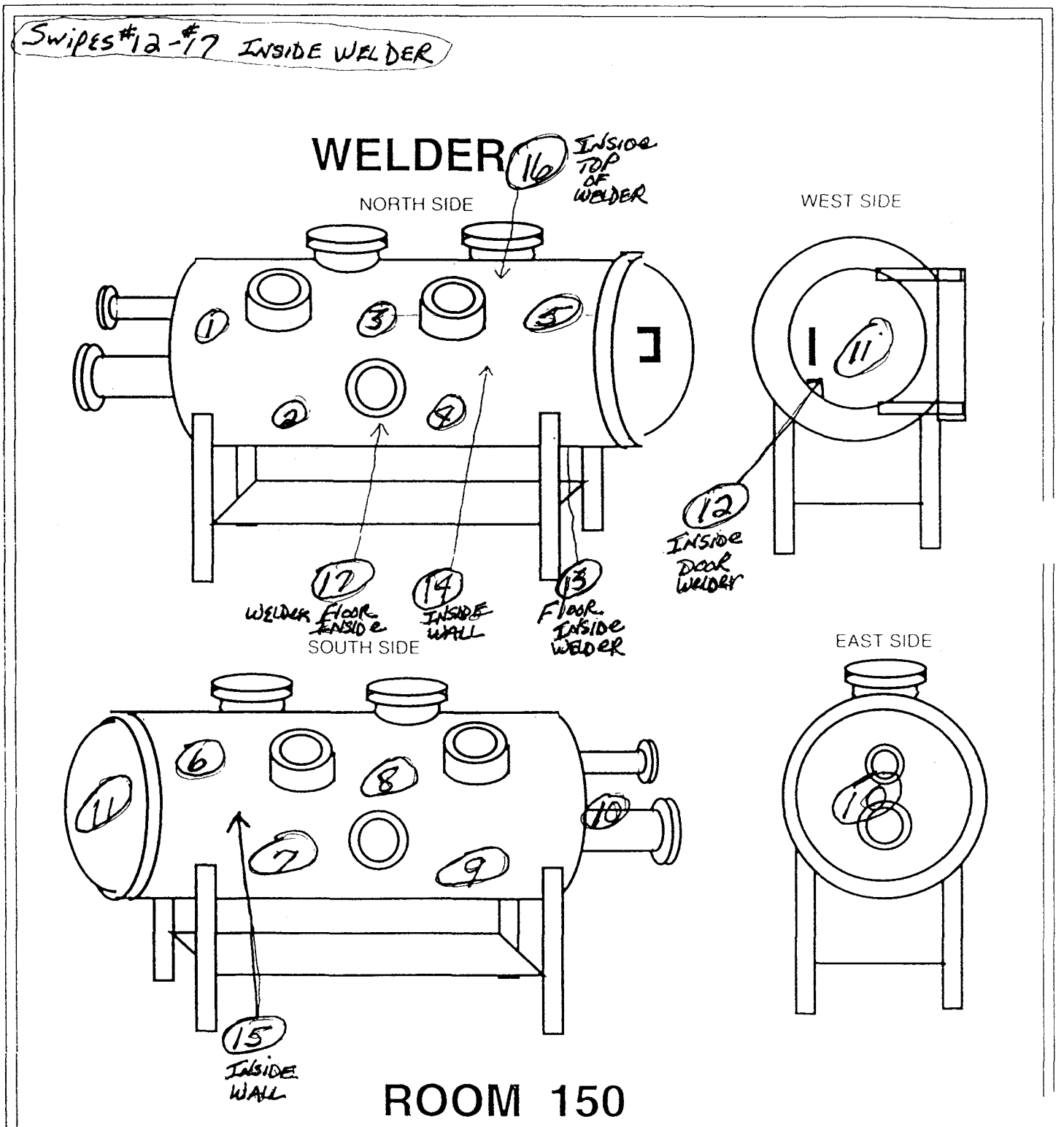

50

SAMPLERS (Signature) Tonya Sangalino, T779A x5392, d 3052

REPORT IDENTIFICATION NUMBER (RIN) 98 D136b

LAB/LOCATION: RECRA

RFETS CONTRACTOR RMRS

ROCKY FLATS
ENVIRONMENTAL TECHNOLOGY SITE
CHAIN OF CUSTODY NUMBER _____

DATE	TIME	~~EVENT~~	~~BOTTLE~~	USER ID	LOCATION	CONTAINER (Room)	~~MATRIX~~	Preservation: Cooled to 4° C	NaOH	HNO3	H2SO4	HCl	Analytes: NR01A001
3-13-98	9:00			SS001	779	150	Filter						P
				SS002									
				SS003									
				SS004									
				SS005									
				SS006									
				SS007									
				SS008									
				SS009									
				SS010									
				SS011									
				SS012									

Relinquished By:	Date	Time	Received By/Organization	Date	Time
T Sangalino	3-13-98				

LABORATORY USE ONLY	Y/N
PCKG REC'D/CUSTODY SEALS INTACT	
SAMPLE LABELS/COCs AGREE	
TEMPERATURE AT TIME OF RECEIPT ___°C	
Charge #	
Project	

REMARKS:

Shipping Requirements: Overnight Delivery ☐ 2-Day Delivery ☐ Air Bill No.

APO COC 5/5/97

SAMPLERS (Signature) Tonya Sangalino / T779A x5392 / d 3052

REPORT IDENTIFICATION NUMBER (RIN) 98D1366

LAB/LOCATION: RECRA

RFETS CONTRACTOR RMRS

ROCKY FLATS
ENVIRONMENTAL TECHNOLOGY SITE
CHAIN OF CUSTODY NUMBER _____

DATE	TIME	~~EVENT~~	~~BOTTLE~~	USER ID	LOCATION	~~CONTAINER~~ RM	MATRIX	Preservation: Cooled to 4°C	NaOH	HNO3	H2SO4	HCl	Analyses: Uranium 200											
3-13-98				SS013	779	150	Filter						P											
				SS014	779	150																		
				SS015	779	150																		
				SS016	779	150																		
				SS017	779	150																		

TS 3-13-98

Relinquished By:	Date	Time	Received By/Organization	Date	Time
J. Sangalino	3-13-98				

LABORATORY USE ONLY	Y/N
PCKG REC'D/CUSTODY SEALS INTACT	
SAMPLE LABELS/COCs AGREE	
TEMPERATURE AT TIME OF RECEIPT ___°C	
Charge #	
Project	

REMARKS:

Shipping Requirements: Overnight Delivery ☐ 2-Day Delivery ☐ Air Bill No.

APO COC 6/5/97

Recra LabNet - Lionville

INORGANICS DATA SUMMARY REPORT 03/23/98

CLIENT: K-H RIN#98D1366 RECRA LOT #: 9803L966
WORK ORDER: 11830-001-001-5555-00

SAMPLE	SITE ID	ANALYTE	RESULT	UNITS	REPORTING LIMIT	DILUTION FACTOR
-001	779-98-3-13-SS#001	Beryllium, Total	0.04 u	UG	0.04	1.0
-002	779-98-3-13-SS#002	Beryllium, Total	0.04 u	UG	0.04	1.0
-003	779-98-3-13-SS#003	Beryllium, Total	0.04 u	UG	0.04	1.0
-004	779-98-3-13-SS#004	Beryllium, Total	0.04 u	UG	0.04	1.0
-005	779-98-3-13-SS#005	Beryllium, Total	0.04 u	UG	0.04	1.0
-006	779-98-3-13-SS#006	Beryllium, Total	0.04 u	UG	0.04	1.0
-007	779-98-3-13-SS#007	Beryllium, Total	0.04 u	UG	0.04	1.0
-008	779-98-3-13-SS#008	Beryllium, Total	0.04 u	UG	0.04	1.0
-009	779-98-3-13-SS#009	Beryllium, Total	0.04 u	UG	0.04	1.0
-010	779-98-3-13-SS#010	Beryllium, Total	0.04 u	UG	0.04	1.0
-011	779-98-3-13-SS#011	Beryllium, Total	0.04 u	UG	0.04	1.0
-012	779-98-3-13-SS#012	Beryllium, Total	0.04 u	UG	0.04	1.0
-013	779-98-3-13-SS#013	Beryllium, Total	0.04	UG	0.04	1.0
-014	779-98-3-13-SS#014	Beryllium, Total	0.04 u	UG	0.04	1.0
-015	779-98-3-13-SS#015	Beryllium, Total	0.30	UG	0.04	1.0
-016	779-98-3-13-SS#016	Beryllium, Total	0.04 u	UG	0.04	1.0
-017	779-98-3-13-SS#017	Beryllium, Total	0.10	UG	0.04	1.0
-018	779-98-3-13-008-140	Beryllium, Total	0.04	UG	0.04	1.0
-019	779-98-3-13-009-140	Beryllium, Total	0.11	UG	0.04	1.0
-020	779-98-3-13-010-140	Beryllium, Total	0.05	UG	0.04	1.0

ROCKY FLATS ENVIRONMENTAL TECHNOLOGY SITE

ROOM 150

Drawing Showing Air Survey Points

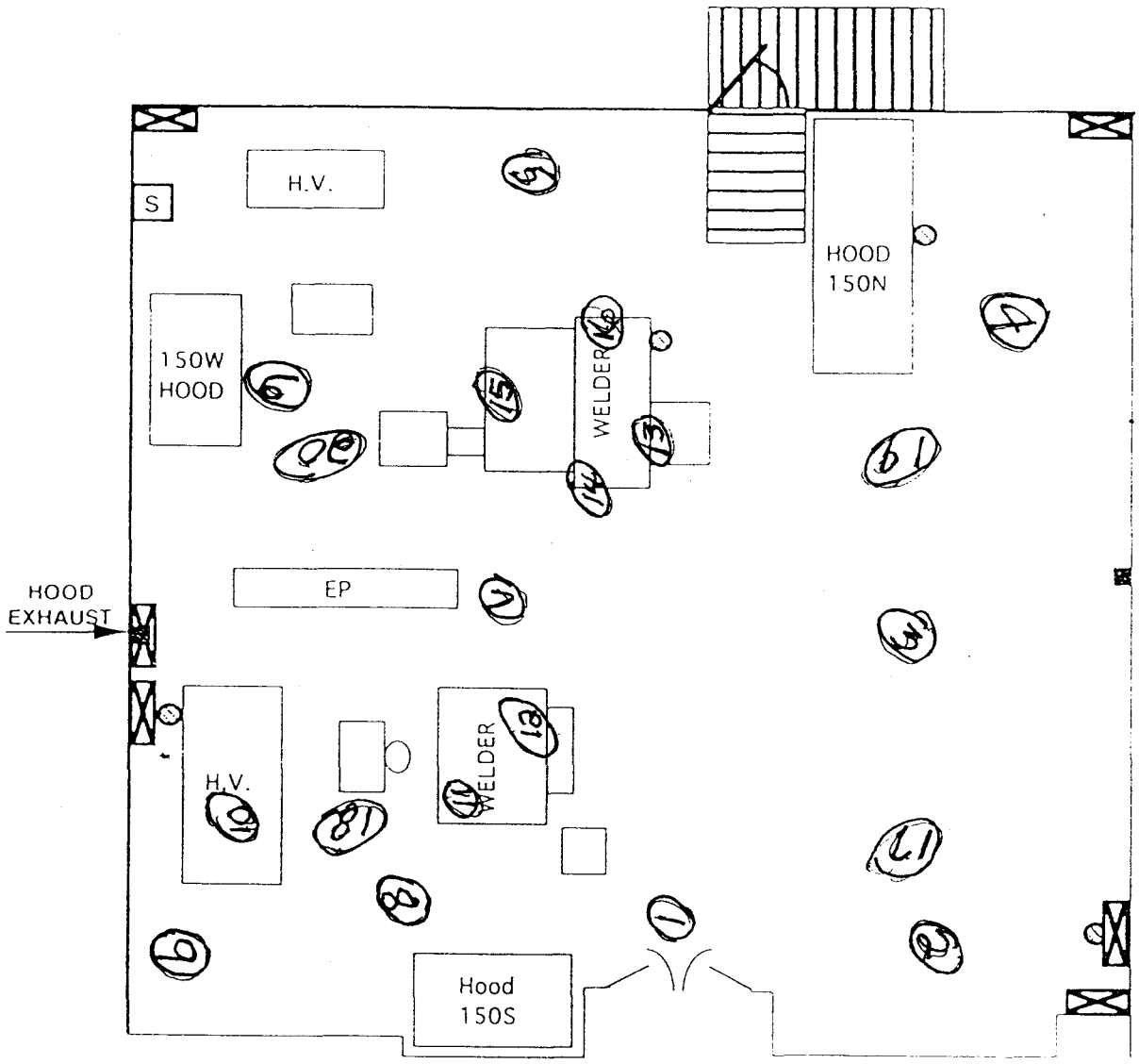

LEGEND:

EP -- Electrical panel

H.V. -- High Voltage power source

-- Exhaust Duct

-- F N A D

S --S A A M

PS --PORTABLE S A A M

-- Air Head

N
W E
S

NOTES:

54

Building 779, Room 150 Beryllium Surface Control Levels

May 5, 1998

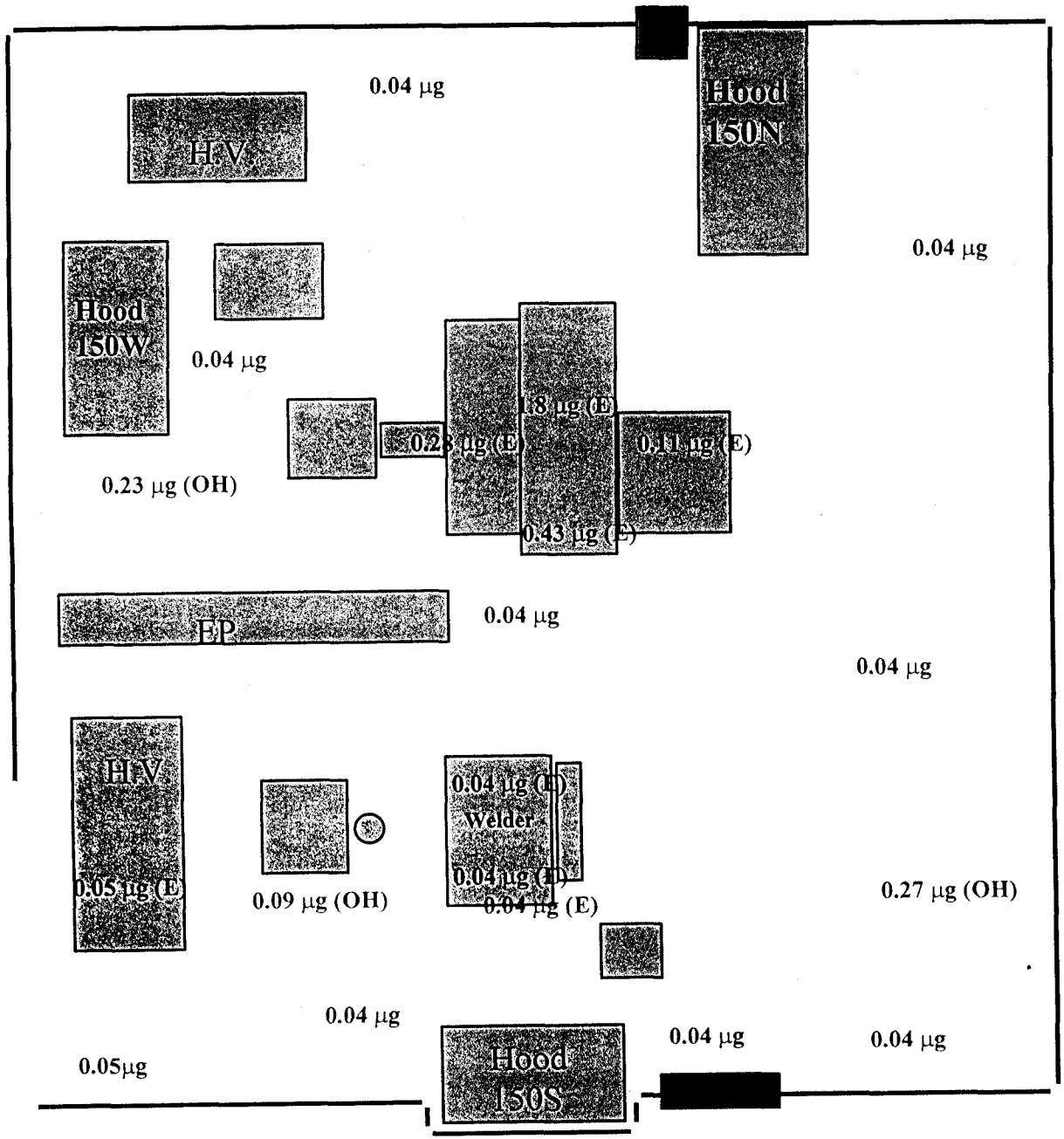

N

(OH) Overhead
(E) Equipment
•All other locations taken on the floor
•All results below surface control levels
•Reported in Micrograms per square foot

55

INORGANICS DATA SUMMARY REPORT 04/08/98

CLIENT: K-H RIN#98D1608

WORK ORDER: 11810-001-001-9999-00

REORA LOT #: 9804L203

SAMPLE	SITE ID	ANALYTE	RESULT	UNITS	REPORTING LIMIT	DILUTION FACTOR
-001	F-001	Beryllium, Total	0.04 u	UG	0.04	1.0
-002	F-002	Beryllium, Total	0.04 u	UG	0.04	1.0
-003	F-003	Beryllium, Total	0.04 u	UG	0.04	1.0
-004	F-004	Beryllium, Total	0.04 u	UG	0.04	1.0
-005	F-005	Beryllium, Total	0.04 u	UG	0.04	1.0
-006	F-006	Beryllium, Total	0.04 u	UG	0.04	1.0
-007	F-007	Beryllium, Total	0.04 u	UG	0.04	1.0
-008	F-008	Beryllium, Total	0.04 u	UG	0.04	1.0
-009	F-009	Beryllium, Total	0.05	UG	0.04	1.0
-010	E-010	Beryllium, Total	0.05	UG	0.04	1.0
-011	E-011	Beryllium, Total	0.04 u	UG	0.04	1.0
-012	E-012	Beryllium, Total	0.04 u	UG	0.04	1.0
-013	E-013	Beryllium, Total	0.11	UG	0.04	1.0
-014	E-014	Beryllium, Total	0.43	UG	0.04	1.0
-015	E-015	Beryllium, Total	0.28	UG	0.04	1.0
-016	E-016	Beryllium, Total	1.8	UG	0.04	1.0
-017	OH-017	Beryllium, Total	0.27	UG	0.04	1.0
-018	OH-018	Beryllium, Total	0.09	UG	0.04	1.0
-019	OH-019	Beryllium, Total	0.04 u	UG	0.04	1.0
-020	OH-020	Beryllium, Total	0.23	UG	0.04	1.0

56

EB WELDER

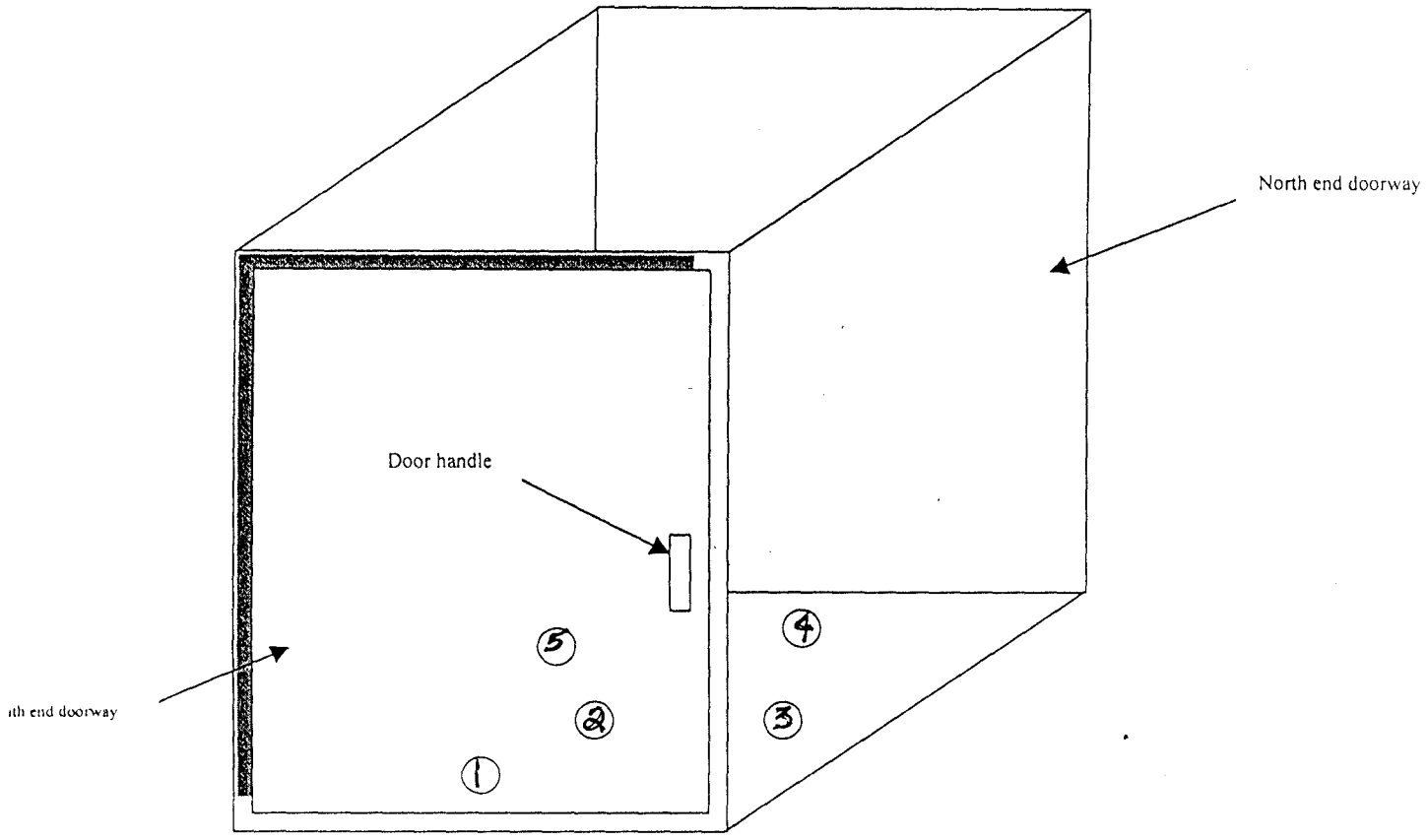

Note: The North end doorway is identical to the

57

BUILDING 779

BERYLLIUM SMEAR RESULTS

ROOM 150

April 13, 1999

Sample Number	Reporting Limit micro grams	Location Totals[1] micro grams/100cm^2
779-99-04-06-13-150-01	0.1 ug	EB Welder Internal 2.5 ug/100cm^2
779-99-04-06-13-150-02	0.1 ug	EB Welder Internal 0.3 ug/100cm^2
779-99-04-06-13-150-03	0.1 ug	EB Welder Internal 4.8 ug/100cm^2
779-99-04-06-13-150-04	0.1 ug	EB Welder Internal 5.2 ug/100cm^2
779-99-04-06-13-150-05	0.1 ug	EB Welder Internal 2.0 ug/100cm^2

[1] See attached map of north EB welder in room 150 for approximate smear locations.

Building 779, Room 150 Beryllium Surface Control Levels

April 1999

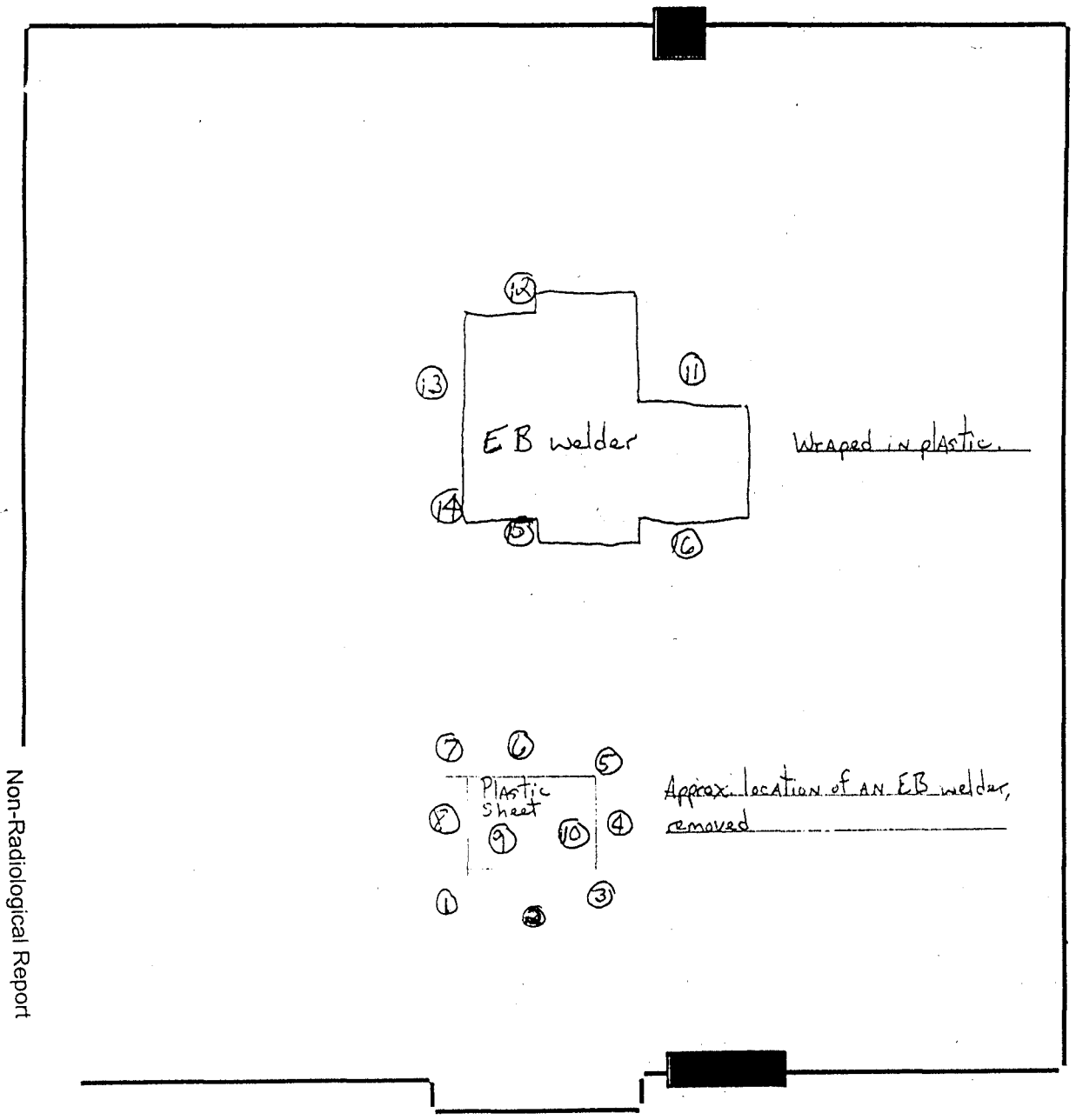

N

All smear locations are approx. and not to scale.

(OH) Overhead
(E) Equipment
•All other locations taken on the floor
•All results below surface control levels
•Reported in Micrograms per square foot

59

BUILDING 779

BERYLLIUM SMEAR RESULTS

ROOM 150

April 23, 1999

Sample Number	Reporting Limit micrograms	Location Totals micrograms/100cm^2
779-99-04-13-13-150-01	0.1 ug	Floor <0.1 ug/100cm^2
779-99-04-13-13-150-02	0.1 ug	Floor <0.1 ug/100cm^2
779-99-04-13-13-150-03	0.1 ug	Floor <0.1 ug/100cm^2
779-99-04-13-13-150-04	0.1 ug	Floor <0.1 ug/100cm^2
779-99-04-13-13-150-05	0.1 ug	Floor <0.1 ug/100cm^2
779-99-04-13-13-150-06	0.1 ug	Floor <0.1 ug/100cm^2
779-99-04-13-13-150-07	0.1 ug	Floor <0.1 ug/100cm^2
779-99-04-13-13-150-08	0.1 ug	Floor <0.1 ug/100cm^2
779-99-04-13-13-150-09	0.1 ug	Floor Plastic Sheet <0.1 ug/100cm^2
779-99-04-13-13-150-10	0.1 ug	Floor Plastic Sheet <0.1 ug/100cm^2
779-99-04-13-13-150-11	0.1 ug	Floor <0.1 ug/100cm^2
779-99-04-13-13-150-12	0.1 ug	Floor <0.1 ug/100cm^2
779-99-04-13-13-150-13	0.1 ug	Floor <0.1 ug/100cm^2
779-99-04-13-13-150-14	0.1 ug	Floor <0.1 ug/100cm^2
779-99-04-13-13-150-15	0.1 ug	Floor <0.1 ug/100cm^2
779-99-04-13-13-150-16	0.1 ug	Floor <0.1 ug/100cm^2

[1] See attached map of room 150 for approximate smear locations on floor. Post Be survey of EB welder internal.

Building 779, Room 150 Beryllium Surface Control Levels

April 1999

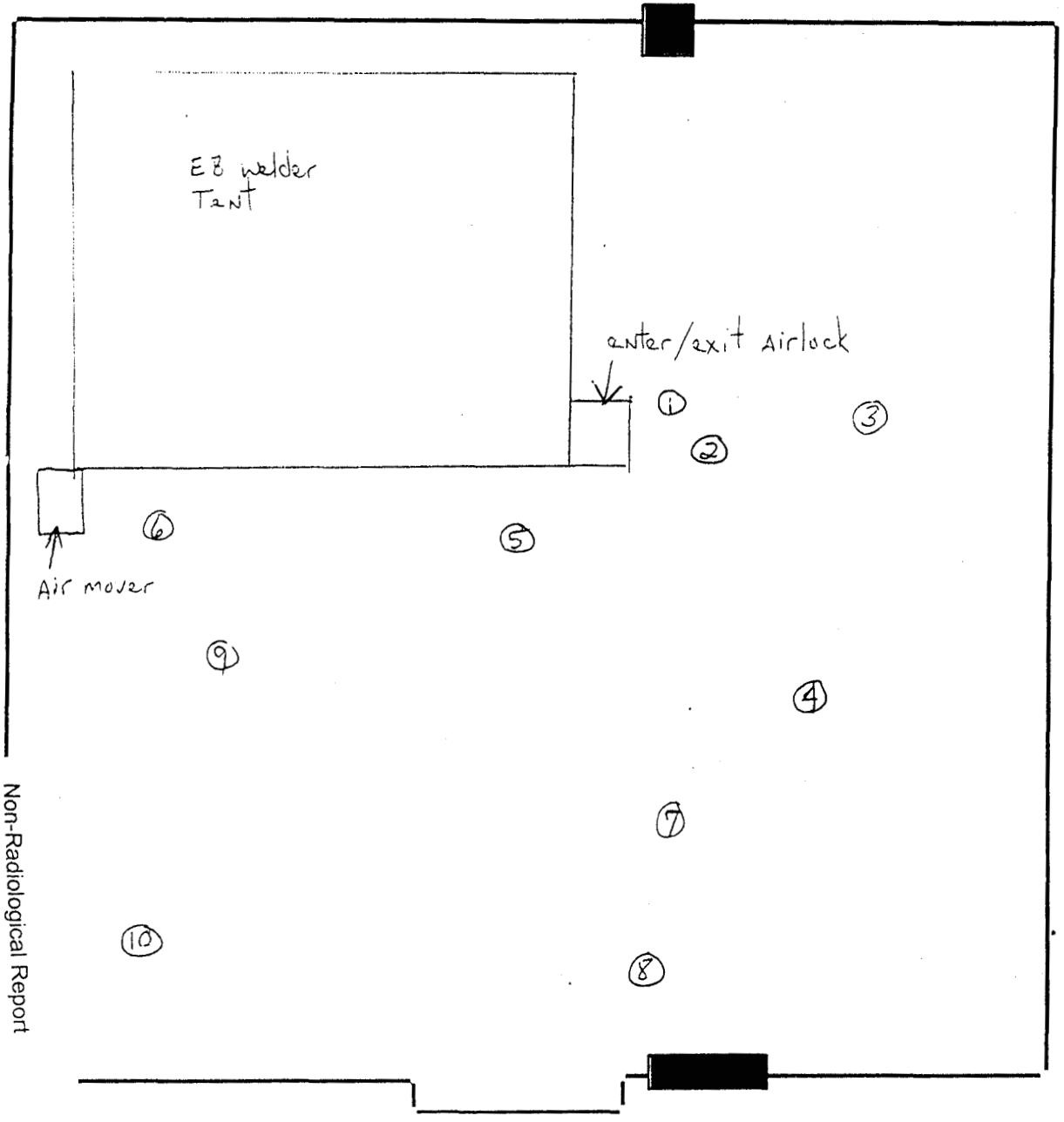

N

(OH) Overhead
(E) Equipment
•All other locations taken on the floor
•All results below surface control levels
•Reported in Micrograms per square foot

BUILDING 779

BERYLLIUM SMEAR RESULTS

ROOM 150

May 15, 1999

Sample Number	Reporting Limit micro grams	Location Totals[1] micro grams/100cm^2
779-99-05-10-13-150-01	0.1 ug	Floor <0.1 ug/100cm^2
779-99-05-10-13-150-02	0.1 ug	Floor <0.1 ug/100cm^2
779-99-05-10-13-150-03	0.1 ug	Floor <0.1 ug/100cm^2
779-99-05-10-13-150-04	0.1 ug	Floor <0.1 ug/100cm^2
779-99-05-10-13-150-05	0.1 ug	Floor <0.1 ug/100cm^2
779-99-05-10-13-150-06	0.1 ug	Floor <0.1 ug/100cm^2
779-99-05-10-13-150-07	0.1 ug	Floor <0.1 ug/100cm^2
779-99-05-10-13-150-08	0.1 ug	Floor <0.1 ug/100cm^2
779-99-05-10-13-150-09	0.1 ug	Floor <0.1 ug/100cm^2
779-99-05-10-13-150-10	0.1 ug	Floor <0.1 ug/100cm^2

[1] See attached map of room 150 for approximate smear locations on floor. Survey done to confirm no Be escaped tent containment into room 150.

#62

5/20

Building 779, Room 150 Beryllium Surface Control Levels

April 1999

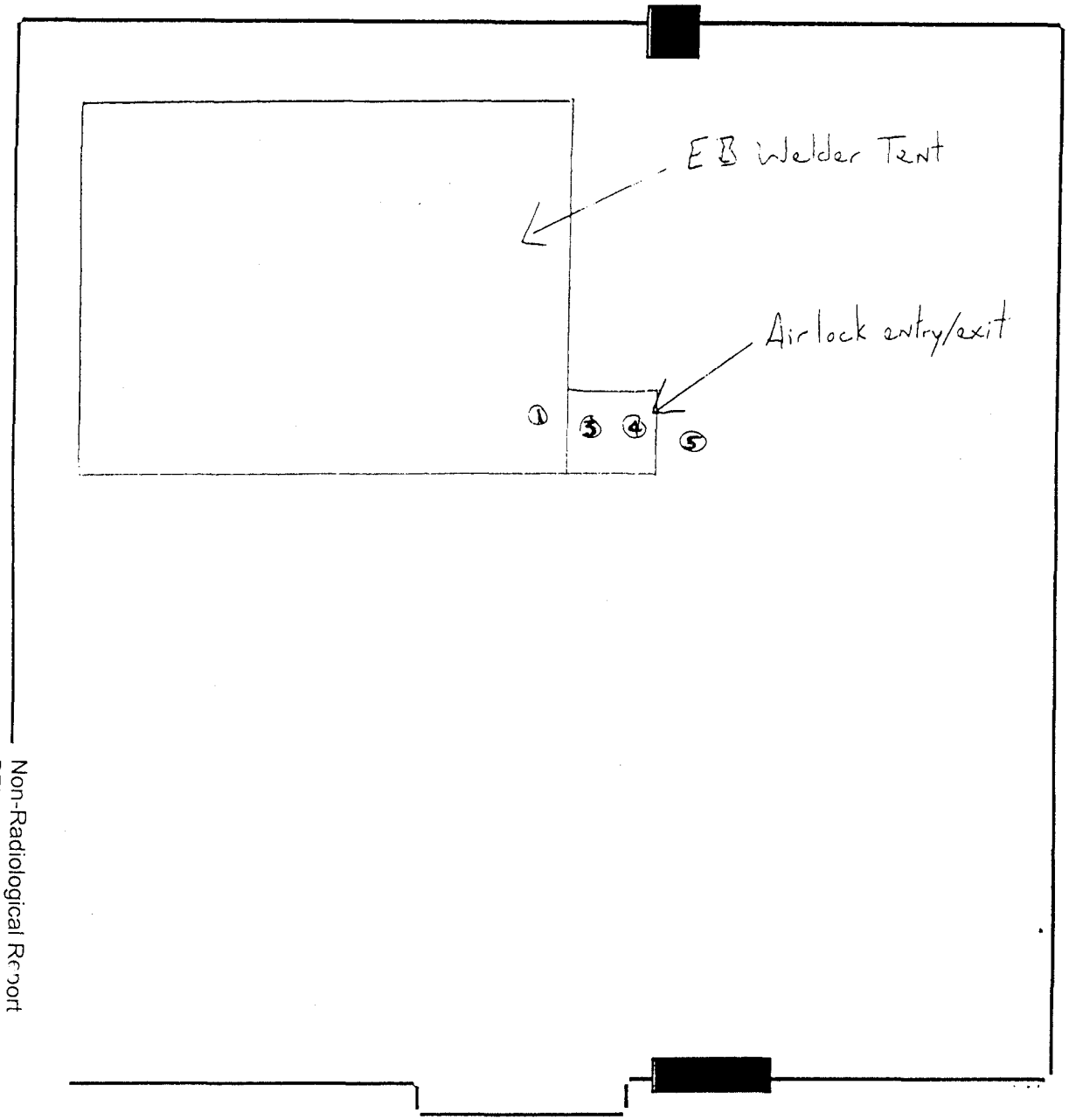

N

(OH) Overhead
(E) Equipment
•All other locations taken on the floor
•All results below surface control levels
•Reported in Micrograms per ~~square foot~~ 100cm²
WR 5-14-99

BUILDING 779

BERYLLIUM SMEAR RESULTS

ROOM 150

May 20, 1999

Sample Number	Reporting Limit micro grams	Location Totals micro grams/100cm²
779-99-05-07-13-150-01	0.1_{ug}	Floor $1.4_{ug/100cm^2}$
779-99-05-07-13-150-03	0.1_{ug}	Floor $<0.1_{ug/100cm^2}$
779-99-05-07-13-150-04	0.1_{ug}	Floor $<0.1_{ug/100cm^2}$
779-99-05-07-13-150-05	0.1_{ug}	Floor $<0.1_{ug/100cm^2}$

[1] See attached map of room 150 for approximate smear locations on floor. Survey done to confirm no Be spread into tent airlock or into room 150.

C4

65

6/11

LEAD X'RAY SHIELDS

EB WELDER

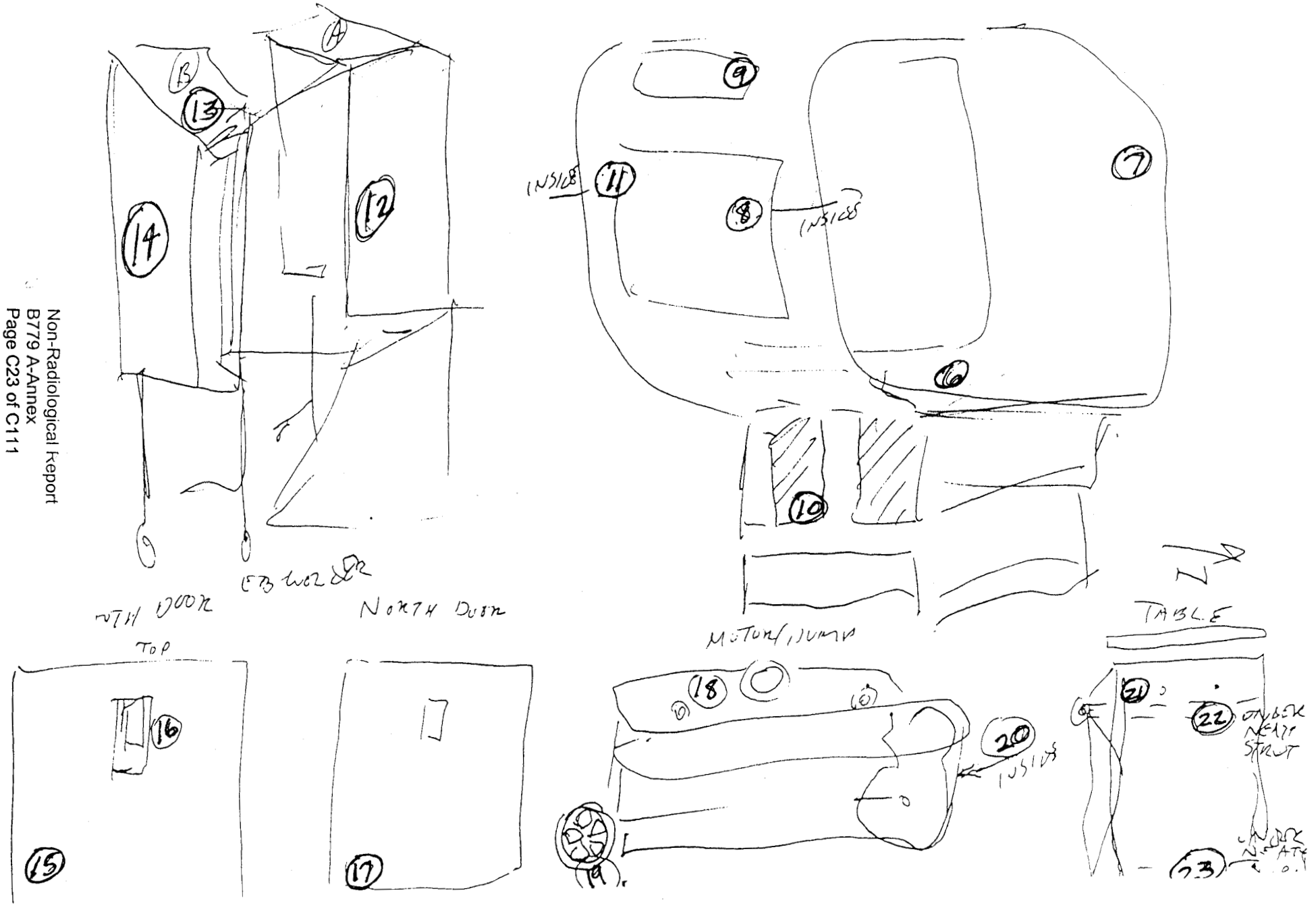

Room 150 5-17

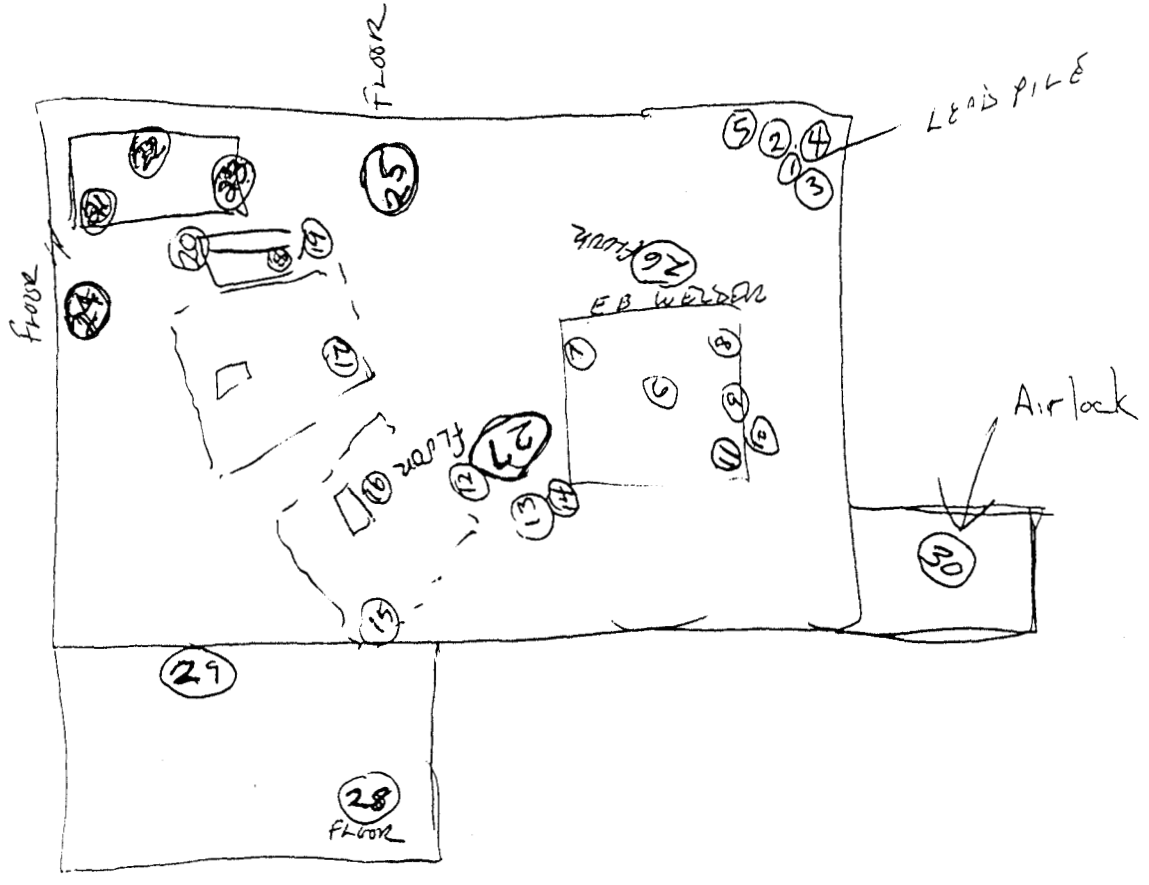
N
Floor
Floor
Floor
Floor
Floor
Floor
Lead pile
EB welder
Airlock

BUILDING 779

BERYLLIUM SMEAR RESULTS

ROOM 150

June 11, 1999

Sample Number [1]	Reporting Limit micro grams	Location Totals micro grams/100cm^2
779-99-05-17-13-150-01	0.1 ug	Lead Pipe Scrap 0.6 ug/100cm^2
779-99-05-17-13-150-02	0.1 ug	Lead Pipe Scrap 1.0 ug/100cm^2
779-99-05-17-13-150-03	0.1 ug	Lead Pipe Scrap 1.2 ug/100cm^2
779-99-05-17-13-150-04	0.1 ug	Lead Pipe Scrap 0.4 ug/100cm^2
779-99-05-17-13-150-05	0.1 ug	Lead Pipe Scrap 0.5 ug/100cm^2
779-99-05-17-13-150-06	0.1 ug	EB welder internal 1.6 ug/100cm^2
779-99-05-17-13-150-07	0.1 ug	EB welder internal 0.4 ug/100cm^2
779-99-05-17-13-150-08	0.1 ug	EB welder internal 0.4 ug/100cm^2
779-99-05-17-13-150-09	0.1 ug	EB welder internal 0.3 ug/100cm^2
779-99-05-17-13-150-10	0.1 ug	EB welder external 0.5 ug/100cm^2
779-99-05-17-13-150-11	0.1 ug	EB welder internal 27.0 ug/100cm^2
779-99-05-17-13-150-12	0.1 ug	X-ray equip Shielding 0.3 ug/100cm^2
779-99-05-17-13-150-13	0.1 ug	X-ray equip Shielding 0.5 ug/100cm^2
779-99-05-17-13-150-14	0.1 ug	X-ray equip Shielding <0.1 ug/100cm^2
779-99-05-17-13-150-15	0.1 ug	EB welder door South 0.9 ug/100cm^2
779-99-05-17-13-150-16	0.1 ug	EB welder door South 0.3 ug/100cm^2
779-99-05-17-13-150-17	0.1 ug	EB welder door North 14.0 ug/100cm^2
779-99-05-17-13-150-18	0.1 ug	Motor/Pump external 1.4 ug/100cm^2
779-99-05-17-13-150-19	0.1 ug	Motor/Pump external 1.5 ug/100cm^2
779-99-05-17-13-150-20	0.1 ug	Motor/Pump internal 8.8 ug/100cm^2
779-99-05-17-13-150-21	0.1 ug	Cart Table Top 0.2 ug/100cm^2
779-99-05-17-13-150-22	0.1 ug	Cart Under Table 0.6 ug/100cm^2
779-99-05-17-13-150-23	0.1 ug	Cart Under Table 2.5 ug/100cm^2
779-99-05-17-13-150-24	0.1 ug	Tent Floor By Exhaust 7.2 ug/100cm^2
779-99-05-17-13-150-25	0.1 ug	Tent Floor By N. Wall 5.7 ug/100cm^2
779-99-05-17-13-150-26	0.1 ug	Tent Floor By Welder 1.7 ug/100cm^2
779-99-05-17-13-150-27	0.1 ug	Tent Floor By Welder 5.0 ug/100cm^2
779-99-05-17-13-150-28	0.1 ug	Tent Floor 1.3 ug/100cm^2
779-99-05-17-13-150-29	0.1 ug	Tent Floor 0.6 ug/100cm^2
779-99-05-17-13-150-30	0.1 ug	Floor Personnel Airlock <0.1 ug/100cm^2

[1] See attached map of equipment and tent for approximate smear locations on floor. Survey done to confirm decon of equipment contaminated with Be. All equipment was contained in plastic tent with local ventilation.

67

8|10

Building 779

Beryllium Smear Locations Room 150

Beryllium Tent[1]

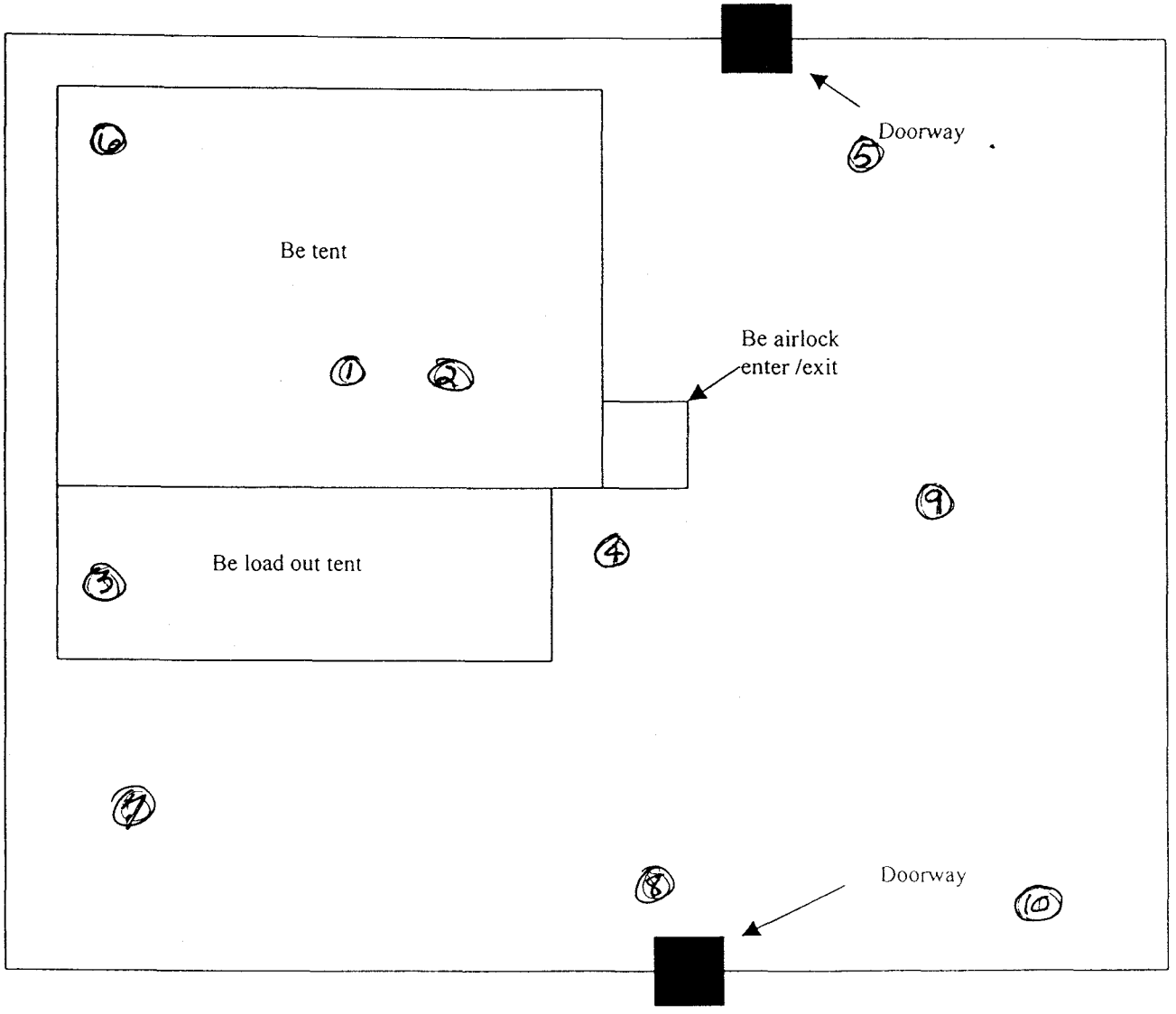

[1] All smears taken were from the floor in room 150. The tent outline shows were the tent had been.

68

BUILDING 779

BERYLLIUM SMEAR RESULTS

ROOM 150

August 10, 1999

Sample Number	Reporting Limit micro grams	Location Totals[1] micro grams/100cm^2
779-99-06-03-13-150-01	0.1 ug	Floor <0.1 ug/100cm^2
779-99-06-03-13-150-02	0.1 ug	Floor <0.1 ug/100cm^2
779-99-06-03-13-150-03	0.1 ug	Floor <0.1 ug/100cm^2
779-99-06-03-13-150-04	0.1 ug	Floor <0.1 ug/100cm^2
779-99-06-03-13-150-05	0.1 ug	Floor <0.1 ug/100cm^2
779-99-06-03-13-150-06	0.1 ug	Floor <0.1 ug/100cm^2
779-99-06-03-13-150-07	0.1 ug	Floor <0.1 ug/100cm^2
779-99-06-03-13-150-08	0.1 ug	Floor <0.1 ug/100cm^2
779-99-06-03-13-150-09	0.1 ug	Floor <0.1 ug/100cm^2
779-99-06-03-13-150-10	0.1 ug	Floor <0.1 ug/100cm^2

[1] See attached map of room 150 for approximate smear locations. All smears taken from floor. Smears taken to verify room is clear from Be.

	A	B	C	D	E	F	G
1	Room Number	Date	Sample Number	Reporting Limit micro grams/100cm2	Location/Description	Smear Results micro grams/100cm2	Sample Method or RIN#
287	152	4/2/98	779-98-F-001	0.1	Floor North	0.90	98D1655
288	152	4/2/98	779-98-F-002	0.1	Floor east doorway	0.20	98D1655
289	152	4/2/98	779-98-F-003	0.1	Shelves north wall	0.90	98D1655
290	152	4/2/98	779-98-F-004	0.1	Floor east	0.90	98D1655
291	152	4/2/98	779-98-F-005	0.1	Floor South Doorway	0.90	98D1655
292	152	4/2/98	779-98-F-006	0.1	Floor west	0.90	98D1655
293	152	4/2/98	779-98-E-007	0.1	Equipment GB 208 and 211	0.90	98D1655
294	152	4/2/98	779-98-OH-008	0.1	Overhead northeast	0.90	98D1655
295	152	4/2/98	779-98-OH-009	0.1	Overhead southeast	0.90	98D1655
296	152	4/2/98	779-98-OH-010	0.1	Overhead west	0.90	98D1655
297	152	4/2/98	779-98-OH-011	0.1	Overhead north	0.90	98D1655
298	152	7/2/98	OH-012	0.1	Equipment North Overhead	0.05	98Z2369
299	152	7/2/98	OH-013	0.1	Equipment Middle Overhead	0.02	98Z2369
300	152	7/2/98	OH-014	0.1	Equipment South Overhead	0.02	98Z2369

* Analysis for Be using NIOSH method 7300 elements by IGP

70

ROCKY FLATS ENVIRONMENTAL TECHNOLOGY SITE

ROOM 152

Drawing Showing Survey Points

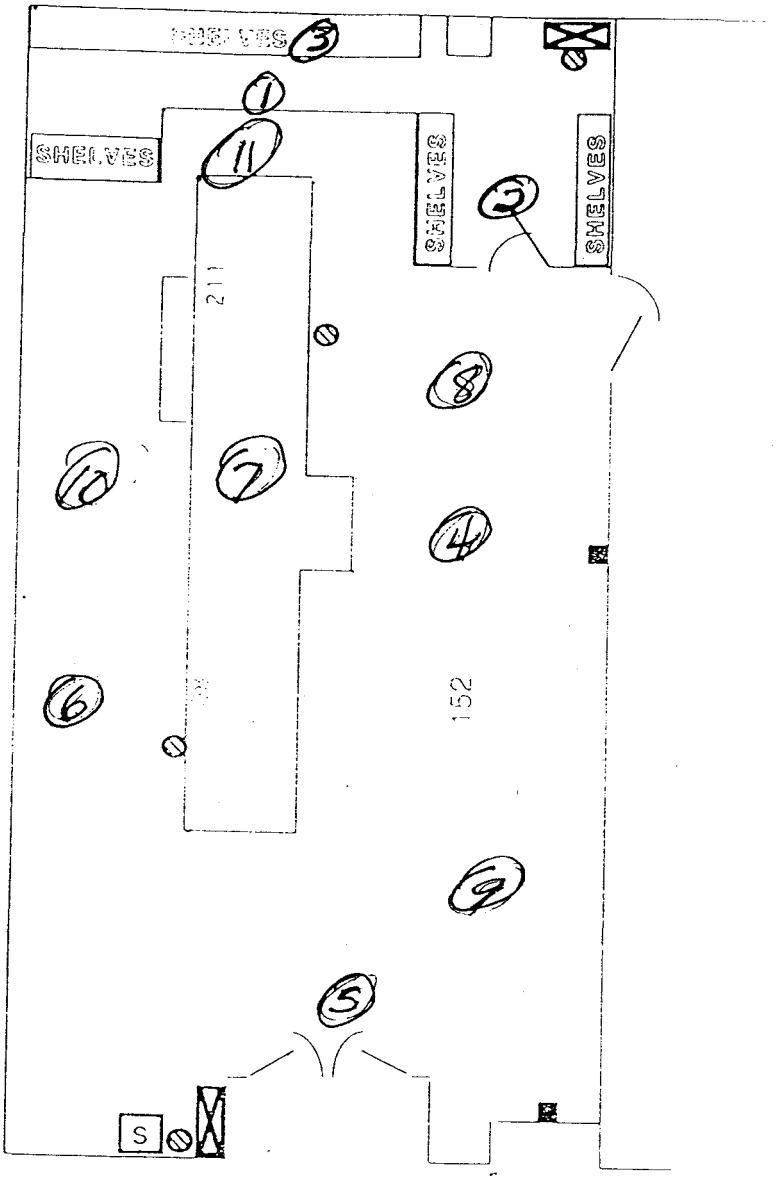

LEGEND:

- -- Exhaust Duct
- -- F N A D
- S -- S A A M
- PS -- PORTABLE S A A M
- -- Air Head

N
W E
S

NOTES:

(2)

of 3

SAMPLERS (Signature) Tonya Sangaline / T-779 X-5392 / Page 3052 DKO 4/7/98

REPORT IDENTIFICATION NUMBER (RIN) 9801655

LAB/LOCATION: ~~RECRA~~ Southwest of Oklah

RFETS CONTRACTOR RMRS

ROCKY FLATS ENVIRONMENTAL TECHNOLOGY SITE CHAIN OF CUSTODY NUMBER _____

DATE	TIME	EVENT	BOTTLE	USER ID	LOCATION	~~CONTAINER~~ Room	MATRIX	Preservation: Cooled to 4°C	NaOH	HNO3	H2SO4	HCl		Analytes: JR01A00L												
4/2/98	1000	N/A	N/A	F-001	779	152	WHAT-41 Filter Paper							R												
				F-002										R												
				E-003										R												
				F-004										R												
				F-005										R												
				F-006										R												
				E-007										R												
				OH-008										R												
				OH-009										R												
				OH-010										R												
				OH-011										R												
				F-012	779	272	WHAT-41 Filter Paper							R												

By:	Date	Time	Received By/Organization	Date	Time
[illegible]	4-2-98	13:00	Tonya Sangaline / H+S	4-6-98	13:10
Sangaline	4-8-98	13:40	Dorenen Olson / H+S	4-8-98	13:45
Olson	4-8-98	1430	L. Miller / ASI	4-8-98	1430

LABORATORY USE ONLY (19)	Y/N
PCKG REC'D/CUSTODY SEALS INTACT	
SAMPLE LABELS/COCs AGREE	
TEMPERATURE AT TIME OF RECEIPT ___°C	

Charge # KT03CX00

Project 779 D&D

Requirements: Overnight Delivery ☐ 2-Day Delivery ☐ Air Bill No. _____

APO COC 6/5/97

72

Building 779, Room 152 Beryllium Surface Control Levels

May 5, 1998

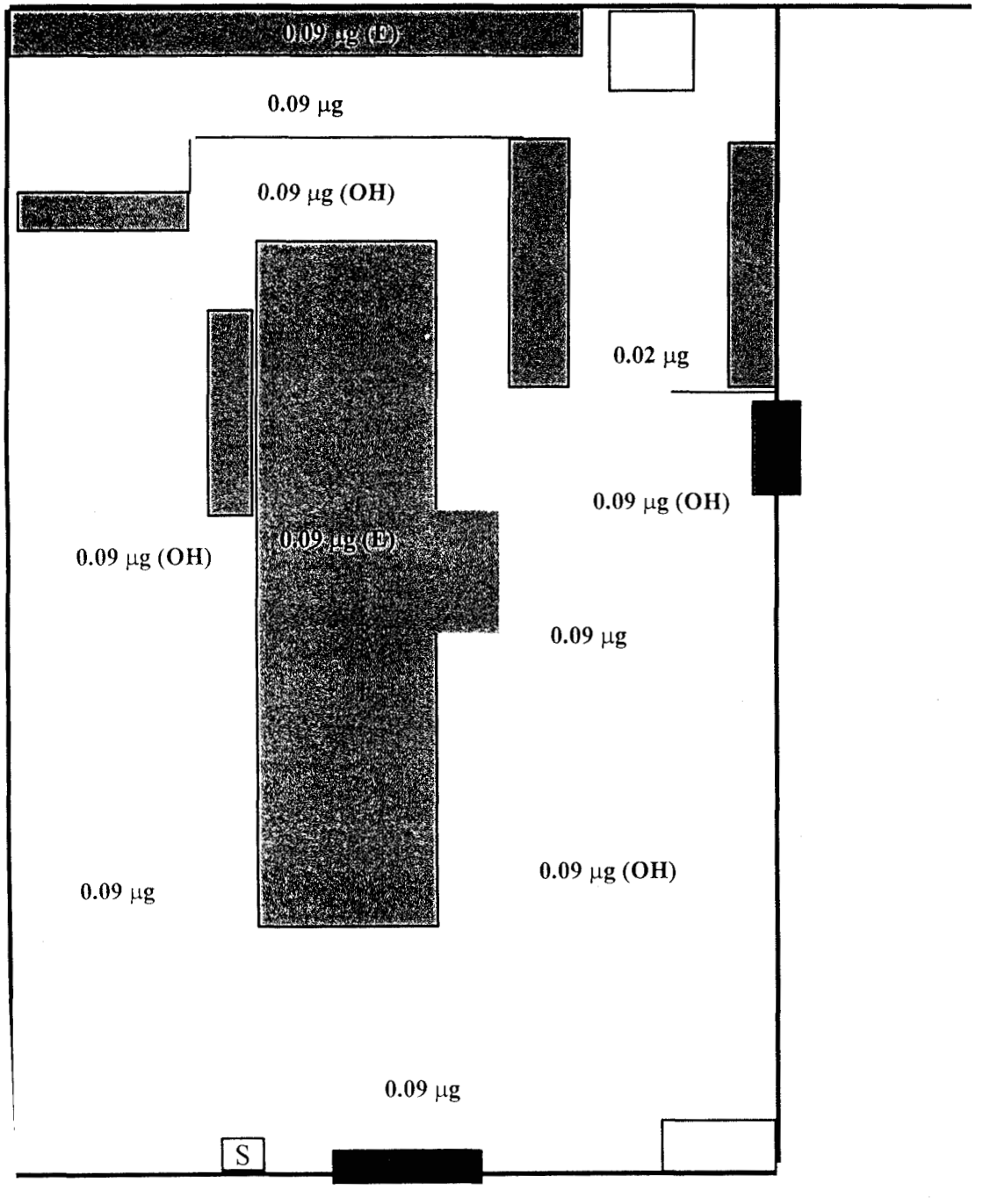

N

(OH) Overhead
(E) Equipment
•All other locations taken on the floor
•All results below surface control levels
•Reported in Micrograms per square foot

73

INORGANIC ANALYSES DATA SHEET (SUMMARY)

Element: Beryllium
CAS No.: 7440-41-7
Matrix: FILTER

Conc. Units: UG/F
RIN #: 98D1655

Laboratory ID:	Client Sample ID:	Conc.	Flag
33536.01	F-001	0.09	U
33536.02	F-002	0.09	U
33536.03	E-003	0.09	U
33536.04	F-004	0.09	U
33536.05	F-005	0.09	U
33536.06	F-006	0.09	U
33536.07	E-007	0.09	U
33536.08	OH-008	0.09	U
33536.09	OH-009	0.09	U
33536.10	OH-010	0.09	U
33536.11	OH-011	0.09	U
33536.12	F-012	0.09	U
33536.13	F-013	0.09	U
33536.14	E-014	0.09	U
33536.15	OH-015	0.09	U
33536.16	OH-016	0.09	U
33536.17	F-017	0.09	U
33536.18	F-018	0.09	U
33536.19	F-019	2.4	
33536.20	F-020	0.09	U
33536.21	F-021	0.09	U
33536.22	E-022	0.09	U
33536.23	E-023	0.09	U
33536.24	E-024	0.09	U
33536.25	OH-025	0.09	U
33536.26	OH-026	0.09	U
33536.27	OH-027	0.09	U
33536.28	OH-028	0.09	U

Southwest Laboratory of Oklahoma, 1700 W Albany, Broken Arrow, OK

74

ROCKY FLATS ENVIRONMENTAL TECHNOLOGY SITE

RADIOLOGICAL SAFETY

Drawing Showing Survey Points

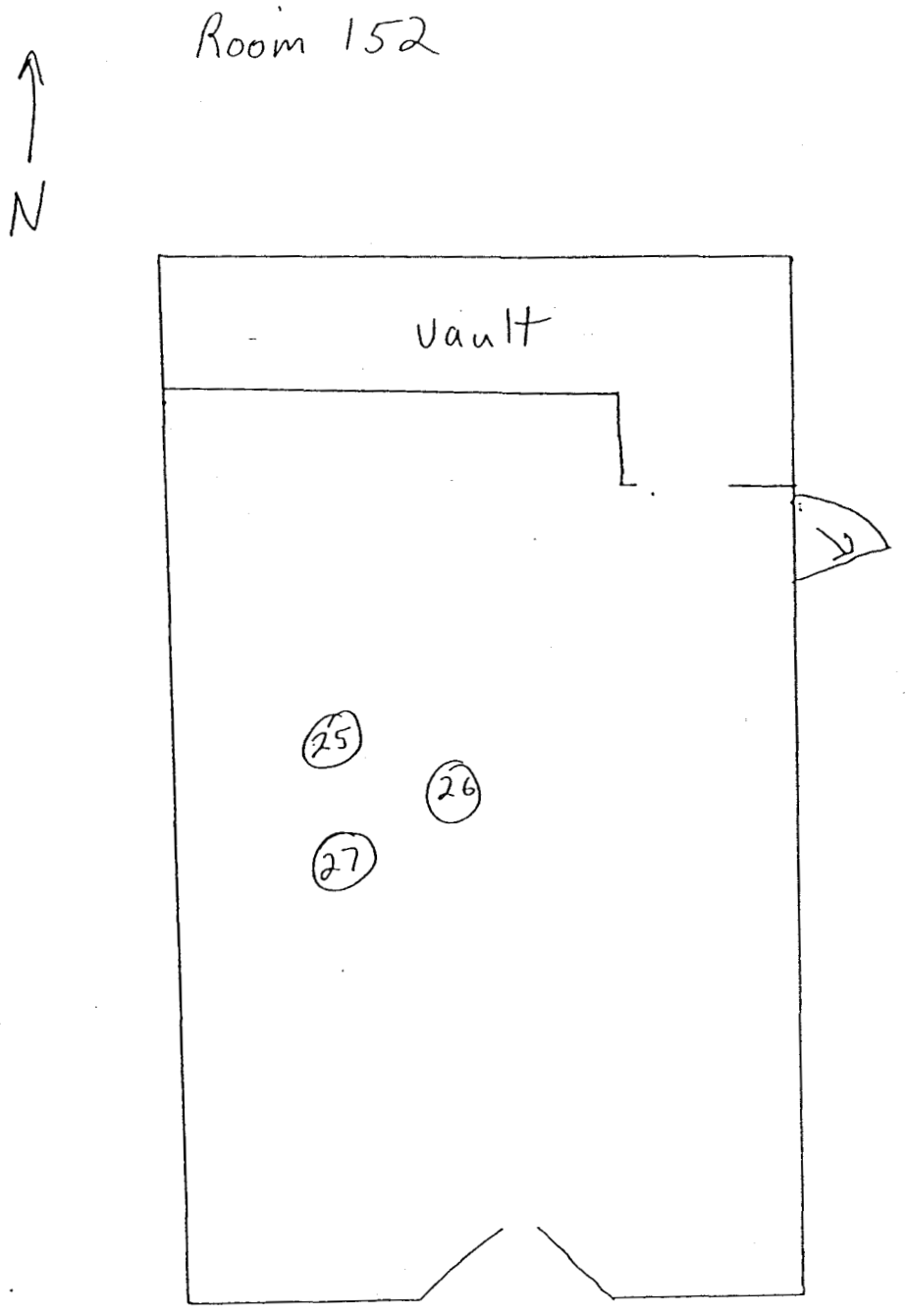

SAMPLERS (Signature) Karen Olson Karen Olson, X6370 fax 2864, Bldg 706

REPORT IDENTIFICATION NUMBER (RIN) 9822369 LAB/LOCATION: 559

RFETS CONTRACTOR RMRS

ROCKY FLATS
ENVIRONMENTAL TECHNOLOGY SITE
CHAIN OF CUSTODY NUMBER _____

DATE	TIME	EVENT	BOTTLE	USER ID	LOCATION	CONTAINER	MATRIX	Preservation: Cooled to 4° C	NaOH	HNO3	H2 SO4	HCl	Analytes: N R01A001	Be
7-2-98	1400	025	025	OH 152	152	025	Wipe on 41 Filter Paper							
↓	↓	026	026	OH 152	152	026	↓							
↓	↓	027	027	OH 152	152	027	↓							

DKO 7-2-98

...ished By:	Date	Time	Received By/Organization	Date	Time
...en Olson	DKO 7-2-98	1600	Lock Box #2	DKO 7-2-98	1600
...k Box #2	DKO 7-6-98	0900	Karen Olson	DKO 7-6-98	0900
...en Olson	7-6-98	0910	LB Johnson Labs	7/6/98	0910

LABORATORY USE ONLY	Y/N
PCKG REC'D/CUSTODY SEALS INTACT	
SAMPLE LABELS/COCs AGREE	
TEMPERATURE AT TIME OF RECEIPT ___ °C	

...RKS:

Charge # KT03C.X00

Project 779 D&D

...ng Requirements: Overnight Delivery ☐ 2-Day Delivery ☐ Air Bill No.

APO COC 6/5/97

COVER PAGE

INORGANIC ANALYSES DATA PACKAGE

Lab Name: Building 559 PA Inorganic Laboratories SOW No.: 7/93

Section: ICPAES

QC Report Number: SD070798.RBE SDG No.: JUL07

Lab Sample ID's beginning with 'X' are TCLP Extracts.

Sample No.	APO Sample I.D.	Lab Sample ID.	
1	98Z2369-021	Berylium Filters	OH-154
2	98Z2369-021R	Berylium Filters, Replicate	OH-154
3	98Z2369-022	Berylium Filters	OH-154
4	98Z2369-023	Berylium Filters	OH-154
5	98Z2369-024	Berylium Filters	OH-154
6	98Z2369-025	Berylium Filters	OH-152
7	98Z2369-026	Berylium Filters	OH-152
8	98Z2369-027	Berylium Filters	OH-152
9	R BLANK #1	Deionized Water Preparation Blank	
10	Blank Filter	Blank Filter	
11	Spiked Filter	Spiked Berylium Filter	

Were ICP Inter-element Corrections applied? Yes/No Y

Were ICP Background Corrections applied? Yes/No Y

I have reviewed the following data for the Sample No.'s listed above.

Signature: Yvonne B Mazza

Date: July 9, 1998 Title: Analytical Chemist

Signature: _____

Date: _____ Title: Reviewer

Beryllium Surface Locations

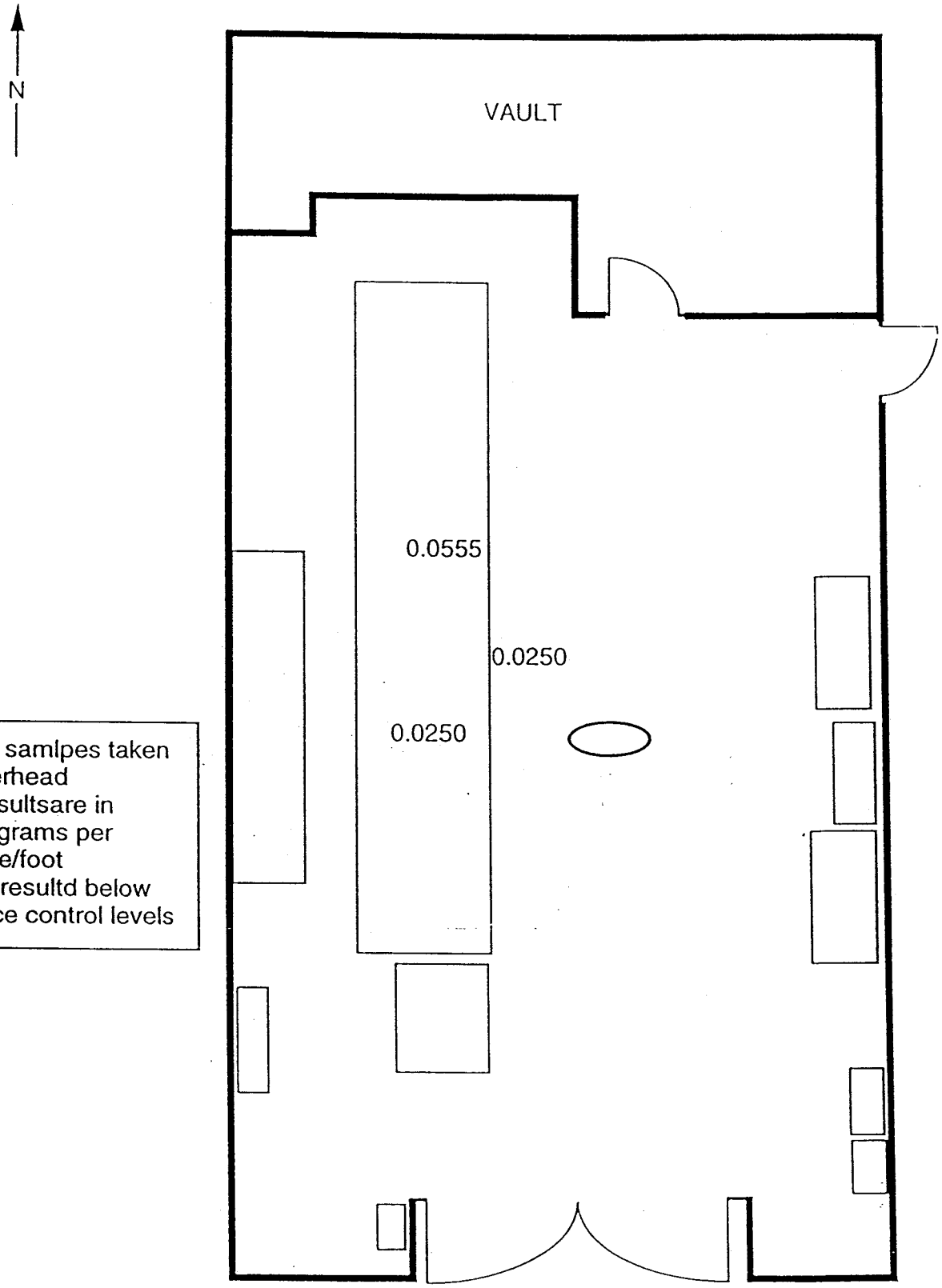

1) Alll samlpes taken in overhead
2) Resultsare in Mircograms per square/foot
3) All resultd below surface control levels

ROOM 152 RAD SURVEY PLAN
NTS

78

FORM 1A

INORGANIC ANALYSIS DATA SHEET

Lab Name: Building 559 PA Inorganic Laboratories

Section: ICPAES SDG No.: JUL07

Matrix: Filter X QC Report No.: SD070798.RBE

Concentration Units: ug Be/Filter

Elements Identified and Measured

Lab Sample ID:	Analyte	Concentration	C	Sampled Date	Receipt Date	M
98Z2369-021	Beryllium	0.0250	U	7/2/98	7/6/98	P
98Z2369-021R	Beryllium	0.0250	U	7/2/98	7/6/98	P
98Z2369-022	Beryllium	0.0250	U	7/2/98	7/6/98	P
98Z2369-023	Beryllium	0.0250	U	7/2/98	7/6/98	P
98Z2369-024	Beryllium	0.0250	U	7/2/98	7/6/98	P
98Z2369-025	Beryllium	0.0565		7/2/98	7/6/98	P
98Z2369-026	Beryllium	0.0250	U	7/2/98	7/6/98	P
98Z2369-027	Beryllium	0.0250	U	7/2/98	7/6/98	P
BLANK #1	Beryllium	0.0250	U	7/7/98	7/7/98	P
Blank Filter	Beryllium	0.0250	U	7/7/98	7/7/98	P
Spiked Filter	Beryllium	5.7770		7/7/98	7/7/98	P

P - ICP;

Comments:

79

	A	B	C	D	E	F	G
1	Room Number	Date	Sample Number	Reporting Limit micro grams/100cm2	Location/Description	Smear Results micro grams/100cm2	Sample Method or RIN#
301	154	7/2/98	F-154-001	0.1	Floor	0.20	98Z2369
302	154	7/2/98	F-154-002	0.1	Floor	0.20	98Z2369
303	154	7/2/98	F154--003	0.1	Floor	0.20	98Z2369
304	154	7/2/98	F-154-004	0.1	Floor	0.20	98Z2369
305	154	7/2/98	F-154-005	0.1	Floor	0.20	98Z2369
306	154	7/2/98	F154--006	0.1	Floor	0.20	98Z2369
307	154	7/2/98	F-154-007	0.1	Floor	0.20	98Z2369
308	154	7/2/98	F-154-008	0.1	Floor	0.20	98Z2369
309	154	7/2/98	F-154-009	0.1	Floor	0.20	98Z2369
310	154	7/2/98	W-154-010	0.1	Mid-Level Points	0.20	98Z2369
311	154	7/2/98	W-154-011	0.1	Mid-Level Points	0.20	98Z2369
312	154	7/2/98	W-154-012	0.1	Mid-Level Points	0.20	98Z2369
313	154	7/2/98	W-154-013	0.1	Mid-Level Points	0.20	98Z2369
314	154	7/2/98	E-154-014	0.1	Mid-Level Points	0.20	98Z2369
315	154	7/2/98	E-154-015	0.1	Mid-Level Points	0.20	98Z2369
316	154	7/2/98	E-154-016	0.1	Mid-Level Points	0.20	98Z2369
317	154	7/2/98	E-154-017	0.1	Mid-Level Points	0.20	98Z2369
318	154	7/2/98	OH154--018	0.1	Overhead	0.20	98Z2369
	154	7/2/98	OH-154-019	0.1	Overhead	0.20	98Z2369
	154	7/2/98	OH-154-020	0.1	Overhead	0.20	98Z2369
	154	7/2/98	OH-154-021	0.1	Overhead	0.20	98Z2369
	154	7/2/98	OH-154-022	0.1	Overhead	0.20	98Z2369
	154	7/2/98	OH-154-023	0.1	Overhead	0.20	98Z2369
	154	7/2/98	OH-154-024	0.1	Overhead	0.20	98Z2369

* Analysis for Be using NIOSH method 7300 elements by IGP

80

PRE 980325-B779-01

Page 3 of 3

RS FORMS 07.02-01

ROCKY FLATS ENVIRONMENTAL TECHNOLOGY SITE

RADIOLOGICAL SAFETY

Drawing Showing Survey Points

ROOM 154

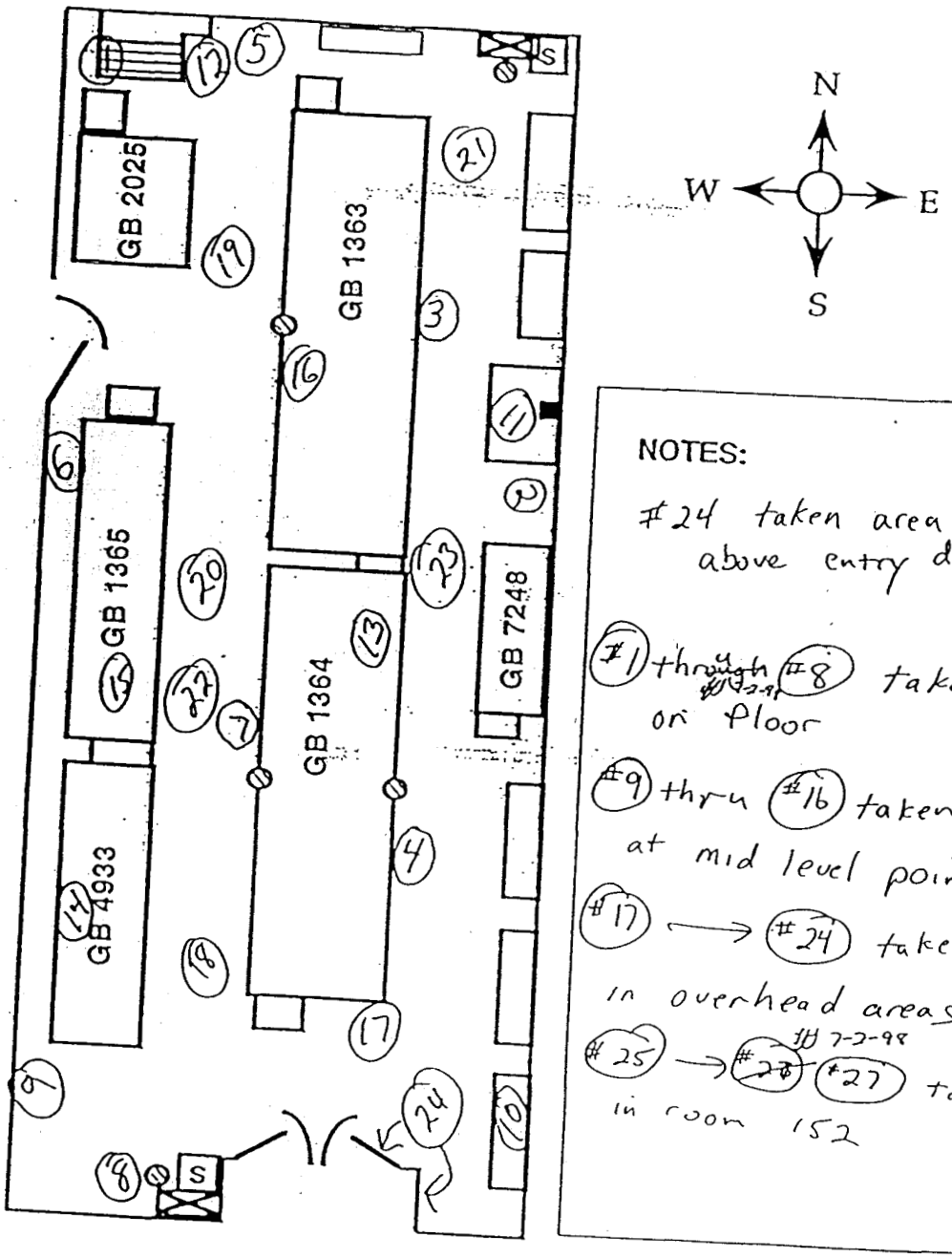

NOTES:

#24 taken area above entry doors

#1 through #8 taken on floor

#9 thru #16 taken at mid level points

#17 → #24 taken in overhead areas

#25 → ~~#26~~ #27 taken in room 152

81

Beryllium Surface Locations

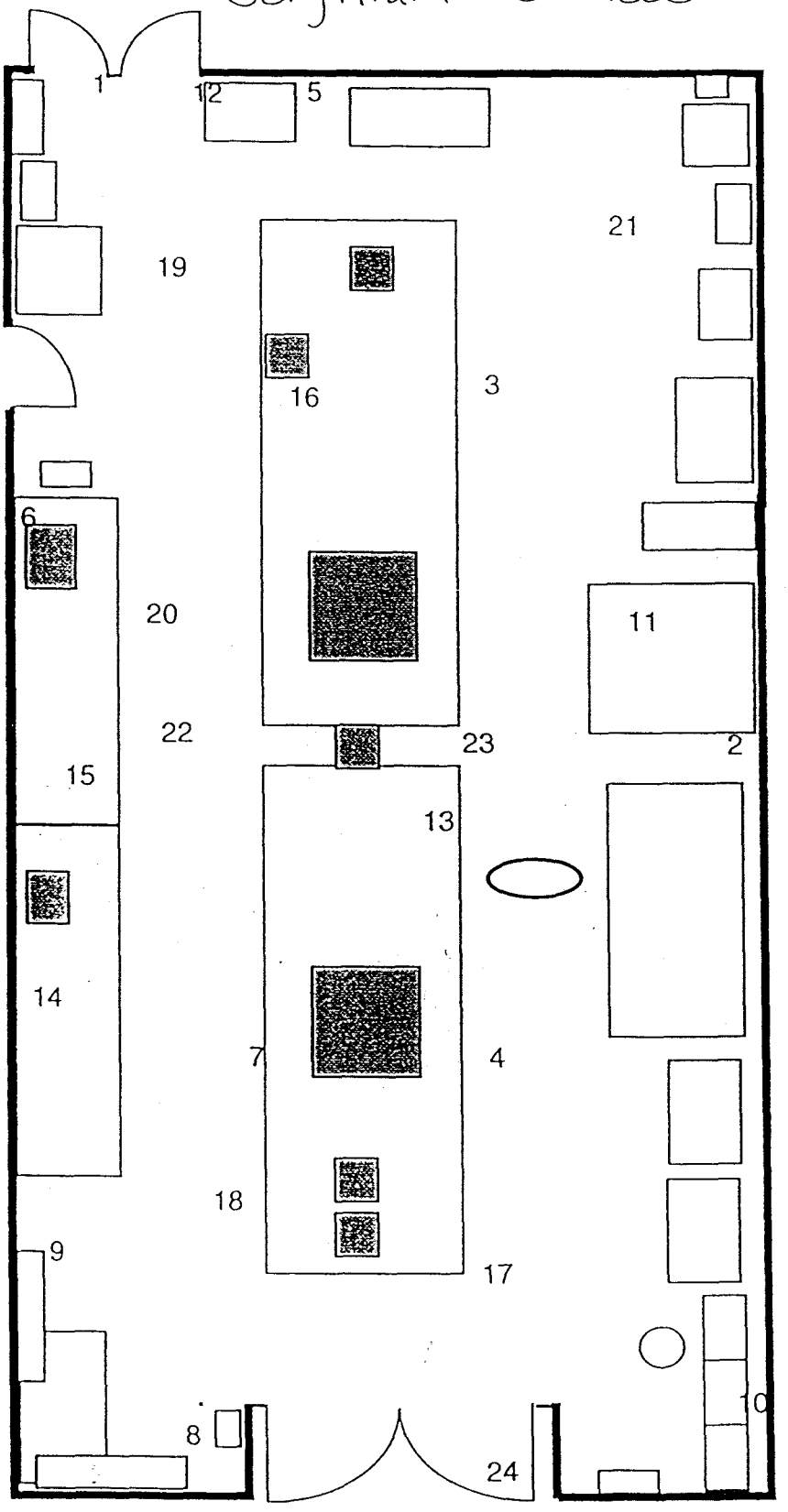

Notes:

All Points are at 0.0250

1) Points 1 through 8 taken on floor
2) Points 9 through 16 taken at mid level points
3) points 17 through 24 taken in overhead areas
4) Point 24 was taken in the area above entry doors

The results are in micrograms per square foot.

All results below surface control levels

ROOM 154 RAD SURVEY PLAN
NTS

82

AMPLERS (Signature) Karen Olson Karen Olson X6370 fax 2864, Bldg. 706

EPORT IDENTIFICATION NUMBER (RIN) 9822369 LAB/LOCATION: 559

FETS CONTRACTOR 2MRS

OCKY FLATS
NVIRONMENTAL TECHNOLOGY SITE
HAIN OF CUSTODY NUMBER _____

ATE	TIME	EVENT	BOTTLE	USER ID	LOCATION	CONTAINER	MATRIX	Preservation: Cooled to 4° C	NaOH	HNO3	H2 SO4	HCl	Analytes: NR01 A001	Be										
2-98	1400	001	001	F-154	154	001	Whatman #41 Filter Paper						N	R										
		002	002	F-154	154	002								R										
		003	003	F-154	154	003								R										
		004	004	F-154	154	004								R										
		005	005	F-154	154	005								R										
		006	006	F-154	154	006								R										
		007	007	F-154	154	007								R										
		008	008	F-154	154	008								R										
		009	009	W-154	154	009								R										
		010	010	W-154	154	010 BKD								R										
		011	011	W-154	154	011								R										
		012	012	W-154	154	012	↓							R										

	Date	Time	Received By/Organization	Date	Time
son	DKD 6-2-98	1600	Lock Box #2	DKD 6-2-98	1600
#2	DKD 6-6-98	0900	Karen Olson	DKD 6-6-98	0900
	6-6-98	0910	LB Johnson Labs	7/6/98	0910

LABORATORY USE ONLY	Y/N
PCKG REC'D/CUSTODY SEALS INTACT	
SAMPLE LABELS/COCs AGREE	
TEMPERATURE AT TIME OF RECEIPT ___ °C	

Charge # KT03 CX00

Project 779 B&D

nts: Overnight Delivery ☐ 2-Day Delivery ☐ Air Bill No.

83

ARO COC 6/5/97

2 3

MPLERS (Signature) Karen Olson Karen Olson X6310 fax 2864, Bldg 706

PORT IDENTIFICATION NUMBER (RIN) 9822369 LAB/LOCATION: 559

ETS CONTRACTOR RMRS

OCKY FLATS
IVIRONMENTAL TECHNOLOGY SITE
IAIN OF CUSTODY NUMBER _____

TE	TIME	EVENT	BOTTLE	USER ID	LOCATION	CONTAINER	MATRIX	Preservation: Cooled to 4° C	NaOH	HNO3	H2SO4	HCl			Analytes: NRDL4001 Filter Be													
78	1400	013	013	E-154	154	013	Whatman 41 Filterpaper																					
		014	014	E-154	154	014																						
		015	015	E-154	154	015																						
		016	016	E-154	154	016																						
		017	017	OH-154	154	017																						
		018	018	OH-154	154	018																						
		019	019	OH-154	154	019																						
		020	020	OH-154	154	020																						
		021	021	OH-154	154	021																						
		022	022	OH-154	154	022																						
		023	023	OH-154	154	023																						
		024	024	OH-154	154	024																						

	Date	Time	Received By/Organization	Date	Time
lson	6-2-98	1600	Lock Box #2	6-2-98	1600
x #2	6-6-98	0900	Karen Olson	6-6-98	0900
lson	6-6-98	0910	LB Johnson Labs	7/6/98	0910

LABORATORY USE ONLY	Y/N
PCKG REC'D/CUSTODY SEALS INTACT	
SAMPLE LABELS/COCs AGREE	
TEMPERATURE AT TIME OF RECEIPT ___ °C	

Charge # KT03CX00

Project 779 DED

ents: Overnight Delivery ☐ 2-Day Delivery ☐ Air Bill No.

APO COC 6/5/97

84

FORM 1A

INORGANIC ANALYSIS DATA SHEET

Lab Name: Building 559 PA Inorganic Laboratories

Section: ICPAES SDG No.: JUL06

Matrix: Filter X QC Report No.: SD070698.RBE

Concentration Units: ug Be/Filter

Elements Identified and Measured

Spiked Beryllium Filter

Lab Sample ID:	Analyte	Concentration	C	Sampled Date	Receipt Date	M
98Z2369-001	Beryllium	0.0250	U	7/2/98	7/6/98	P
98Z2369-001R	Beryllium	0.0250	U	7/2/98	7/6/98	P
98Z2369-002	Beryllium	0.0250	U	7/2/98	7/6/98	P
98Z2369-003	Beryllium	0.0250	U	7/2/98	7/6/98	P
98Z2369-004	Beryllium	0.0250	U	7/2/98	7/6/98	P
98Z2369-005	Beryllium	0.0250	U	7/2/98	7/6/98	P
98Z2369-006	Beryllium	0.0250	U	7/2/98	7/6/98	P
98Z2369-007	Beryllium	0.0250	U	7/2/98	7/6/98	P
98Z2369-008	Beryllium	0.0250	U	7/2/98	7/6/98	P
98Z2369-009	Beryllium	0.0250	U	7/2/98	7/6/98	P
98Z2369-010	Beryllium	0.0250	U	7/2/98	7/6/98	P
98Z2369-011	Beryllium	0.0250	U	7/2/98	7/6/98	P
98Z2369-012	Beryllium	0.0250	U	7/2/98	7/6/98	P
98Z2369-013	Beryllium	0.0250	U	7/2/98	7/6/98	P
98Z2369-014	Beryllium	0.0250	U	7/2/98	7/6/98	P
98Z2369-015	Beryllium	0.0250	U	7/2/98	7/6/98	P
98Z2369-016	Beryllium	0.0250	U	7/2/98	7/6/98	P
98Z2369-017	Beryllium	0.0250	U	7/2/98	7/6/98	P
98Z2369-018	Beryllium	0.0250	U	7/2/98	7/6/98	P
98Z2369-019	Beryllium	0.0250	U	7/2/98	7/6/98	P
98Z2369-020	Beryllium	0.0250	U	7/2/98	7/6/98	P
R BLANK #1	Beryllium	0.0250	U	7/7/98	7/7/98	P
Blank Filter	Beryllium	0.0250	U	7/7/98	7/7/98	P
Spiked Filter	Beryllium	6.9895		7/7/98	7/7/98	P

Indicate Analytical Method Used: P - ICP;

Comments:

85

FORM 1A

INORGANIC ANALYSIS DATA SHEET

Lab Name: Building 559 PA Inorganic Laboratories

Section: ICPAES SDG No.: JUL07

Matrix: Filter X QC Report No.: SD070798.RBE

Concentration Units: ug Be/Filter

Elements Identified and Measured

Lab Sample ID:	Analyte	Concentration	C	Sampled Date	Receipt Date	M
98Z2369-021	Beryllium	0.0250	U	7/2/98	7/6/98	P
98Z2369-021R	Beryllium	0.0250	U	7/2/98	7/6/98	P
98Z2369-022	Beryllium	0.0250	U	7/2/98	7/6/98	P
98Z2369-023	Beryllium	0.0250	U	7/2/98	7/6/98	P
98Z2369-024	Beryllium	0.0250	U	7/2/98	7/6/98	P
98Z2369-025	Beryllium	0.0566		7/2/98	7/6/98	P
8Z2369-026	Beryllium	0.0250	U	7/2/98	7/6/98	P
98Z2369-027	Beryllium	0.0250	U	7/2/98	7/6/98	P
BLANK #1	Beryllium	0.0250	U	7/7/98	7/7/98	P
Blank Filter	Beryllium	0.0250	U	7/7/98	7/7/98	P
Spiked Filter	Beryllium	5.7770		7/7/98	7/7/98	P

P - ICP;

Comments:

84

	A	B	C	D	E	F	G
1	***Room Number***	***Date***	***Sample Number***	***Reporting Limit*** *micro grams/100cm2*	***Location/Description***	***Smear Results*** *micro grams/100cm2*	***Sample Method or RIN#***
295	155	3/31/98	F-021	NA	Floor North Doorway	0.04	98D1608
296	155	3/31/98	F-022	NA	Floor Middle of Room	0.04	98D1608
297	155	3/31/98	F-023	NA	Floor Southeast	0.04	98D1608
298	155	3/31/98	F-024	NA	Floor Northeast	0.04	98D1608
299	155	3/31/98	F-026	NA	Floor under GB 218	0.04	98D1608
300	155	3/31/98	F-027	NA	Floor under GB 220	0.04	98D1608
301	155	3/31/98	F-028	NA	Floor under GB 223	0.04	98D1608
302	155	3/31/98	F-029	NA	Floor under GB 224	0.04	98D1608
303	155	3/31/98	F-030	NA	Floor under Hood 155NE	0.04	98D1608

* Analysis for Be using NIOSH method 7300 elements by IGP

87

ROCKY FLATS ENVIRONMENTAL TECHNOLOGY SITE

ROOM 155

Drawing Showing Air Survey Points

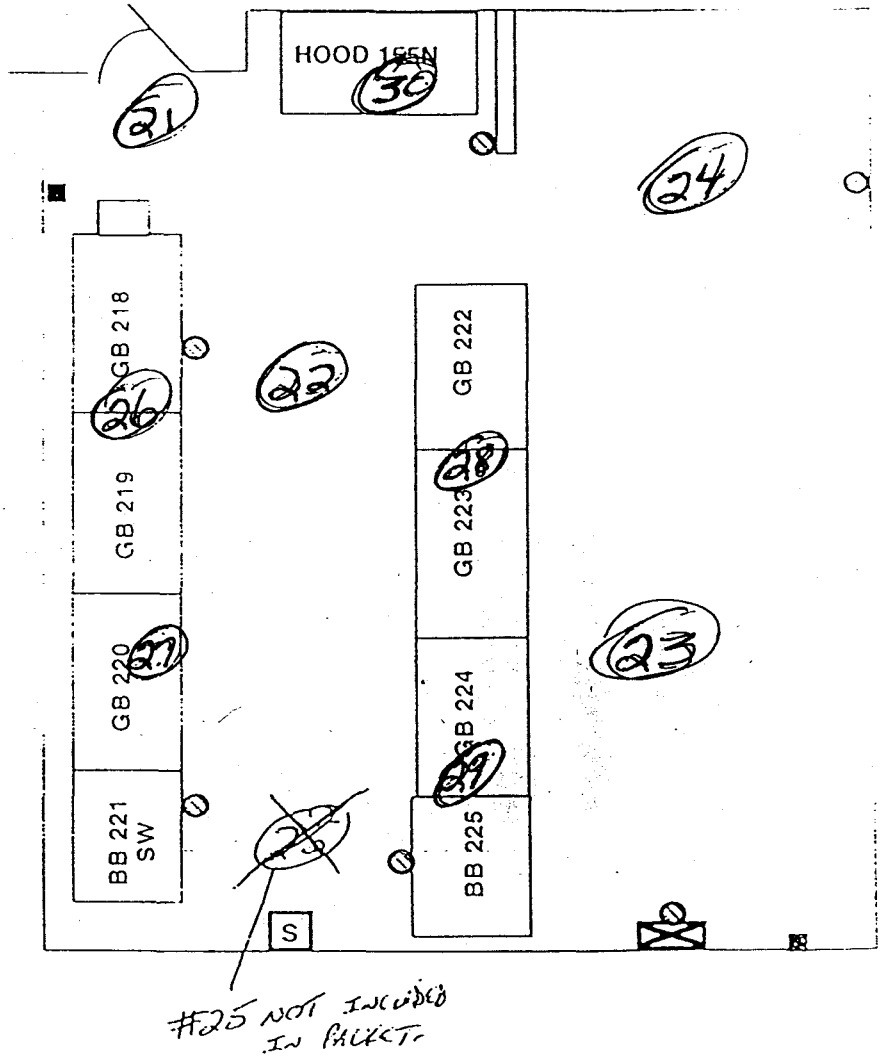

LEGEND:

- ⊠ – Exhaust Duct
- ■ –F N A D
- S –S A A M
- ⊘ –Air Head

N
W E
S

NOTES:

Air supply ducts in this room are equiped with vent filters.

Swipe #25 omitted

Building 779, Room 155 Beryllium Surface Control Levels

May 5, 1998

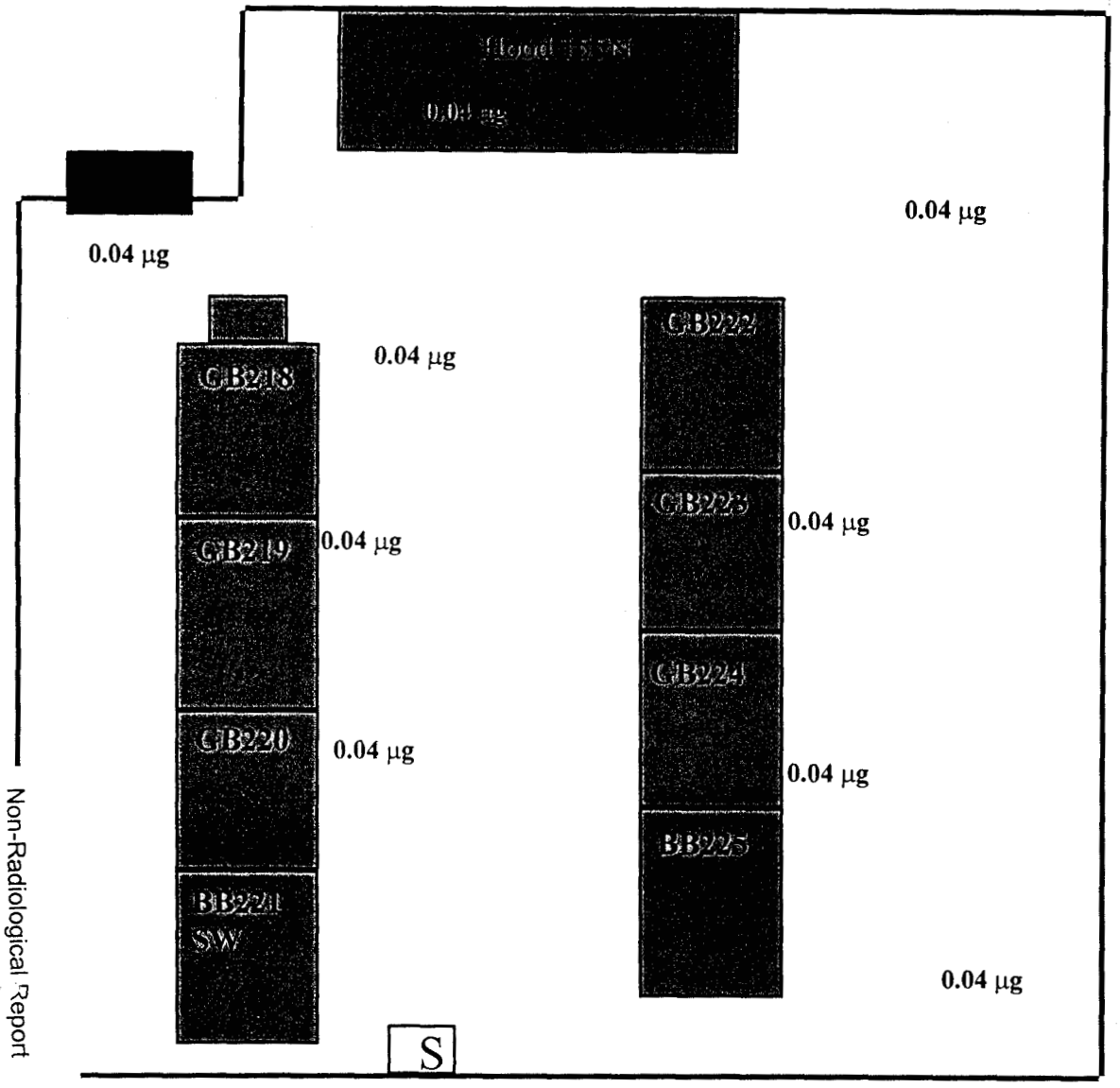

N

- All smears taken on the floor
- All results below surface control levels
- Reported in Micrograms per square foot

87

7 3

SAMPLERS (Signature) TONYA SANGALINE / T-779 X-5392 / PACERD-3052

REPORT IDENTIFICATION NUMBER (RIN) 9801608 LAB/LOCATION: RECRA

RFETS CONTRACTOR RMRS

ROCKY FLATS ENVIRONMENTAL TECHNOLOGY SITE CHAIN OF CUSTODY NUMBER _____

DATE	TIME	EVENT	BOTTLE	USER ID	LOCATION	ROCM ~~CONTAINER~~	MATRIX	Preservation: Cooled to 4° C	NaOH	HNO3	H2SO4	HCl		Analytes: PROJ/ACQ1											
3/31	1230	N/A	N/A	E-013	779	150	WHAT-41 Filter Paper							P											
				E-014										P											
				E-015										P											
				E-016										P											
				OH-017										P											
				OH-018										P											
				OH-019										P											
				OH-020										P											
3/31	1300	N/A	N/A	F-021	779	155	WHAT-41 Filter Paper							P											
				F-022										P											
				F-023										P											
				F-024										P											

By:	Date	Time	Received By/Organization	Date	Time
ngalie	3-31-98	15:30	D. Karen Olson	3-31-98	1530
lson	4-1-98	08:35	Sfaneey	4/1/98	0835

LABORATORY USE ONLY (19)	Y/N
PCKG REC'D/CUSTODY SEALS INTACT	
SAMPLE LABELS/COCs AGREE	
TEMPERATURE AT TIME OF RECEIPT ___ °C	

Charge # KT03CX00

Project 779 D&D

Requirements: Overnight Delivery ☐ 2-Day Delivery ☐ Air Bill No. _____

APO COC 6/5/97

Non-Radiological Report
PB779-A-Annex
Page 248 of 111

90

3

SAMPLERS (Signature) Tonya Sangaline / T-779 X-5392 / Paper D-3052

REPORT IDENTIFICATION NUMBER (RIN) 98D 1608 LAB/LOCATION: RECRA

RFETS CONTRACTOR RMRS

ROCKY FLATS ENVIRONMENTAL TECHNOLOGY SITE CHAIN OF CUSTODY NUMBER _____

DATE	TIME	EVENT	BOTTLE	USER ID	LOCATION	~~CONTAINER~~ Room	MATRIX	Preservation: Cooled to 4° C	NaOH	HNO3	H2SO4	HCl	Analytes: ARO1A001
3-31	1300	N/A	N/A	F-026	779	155	WHAT-41 FILTER PAPER						P
				F-027									P
				F-028									P
				F-029									P
				F-030									P

...ly:	Date	Time	Received By/Organization	Date	Time
...aline	3-31-98	15:30	D. Karen Olson	3-31-98	1530
...Olson	4-1-98	0835	Yancey	4/1/98	0835

LABORATORY USE ONLY (19)	Y/N
PCKG REC'D/CUSTODY SEALS INTACT	
SAMPLE LABELS/COCs AGREE	
TEMPERATURE AT TIME OF RECEIPT ___ °C	

Charge # KT03CX00

Project 779 D&D

...equirements: Overnight Delivery ☐ 2-Day Delivery ☐ Air Bill No. _____

APO COC 6/5/97

91

INORGANICS DATA SUMMARY REPORT 04/08/98

CLIENT: K-H RIN#98D1608 RFORA LOT #: 5804L204

WORK ORDER: L1830-001-001-2222-00

SAMPLE	SITE ID	ANALYTE	RESULT	UNITS	REPORTING LIMIT	DILUTION FACTOR
-001	F-021	Beryllium, Total	0.04 u	UG	0.04	1.0
-002	F-022	Beryllium, Total	0.04 u	UG	0.04	1.0
-003	F-023	Beryllium, Total	0.04 u	UG	0.04	1.0
-004	F-024	Beryllium, Total	0.04 u	UG	0.04	1.0
-005	F-026	Beryllium, Total	0.04 u	UG	0.04	1.0
-006	F-027	Beryllium, Total	0.04 u	UG	0.04	1.0
-007	F-028	Beryllium, Total	0.04 u	UG	0.04	1.0
-008	F-029	Beryllium, Total	0.04 u	UG	0.04	1.0
-009	F-030	Beryllium, Total	0.04 u	UG	0.04	1.0

92

	A	B	C	D	E	F	G
1	***Room Number***	***Date***	***Sample Number***	***Reporting Limit*** *micro grams/100cm2*	***Location/Description***	***Smear Results*** *micro grams/100cm2*	***Sample Method or RIN#***
304	157	3/27/98	F-013	NA	Floor North Doorway	0.04	98D1540
305	157	3/27/98	F-014	NA	Floor northwest	0.05	98D1540
306	157	3/27/98	F-015	NA	Floor southwest	0.04	98D1540
307	157	3/27/98	F-016	NA	Floor Southeast	0.04	98D1540
308	157	3/27/98	E-017	NA	Equipment GBs 223 and 224	0.04	98D1540
309	157	3/27/98	OH-018	NA	Overhead north middle	0.04	98D1540
310	157	3/27/98	OH-019	NA	Overhead southwest	0.04	98D1540

* Analysis for Be using NIOSH method 7300 elements by IGP

73

ROCKY FLATS ENVIRONMENTAL TECHNOLOGY SITE

ROOM 157

Drawing Showing Survey Points

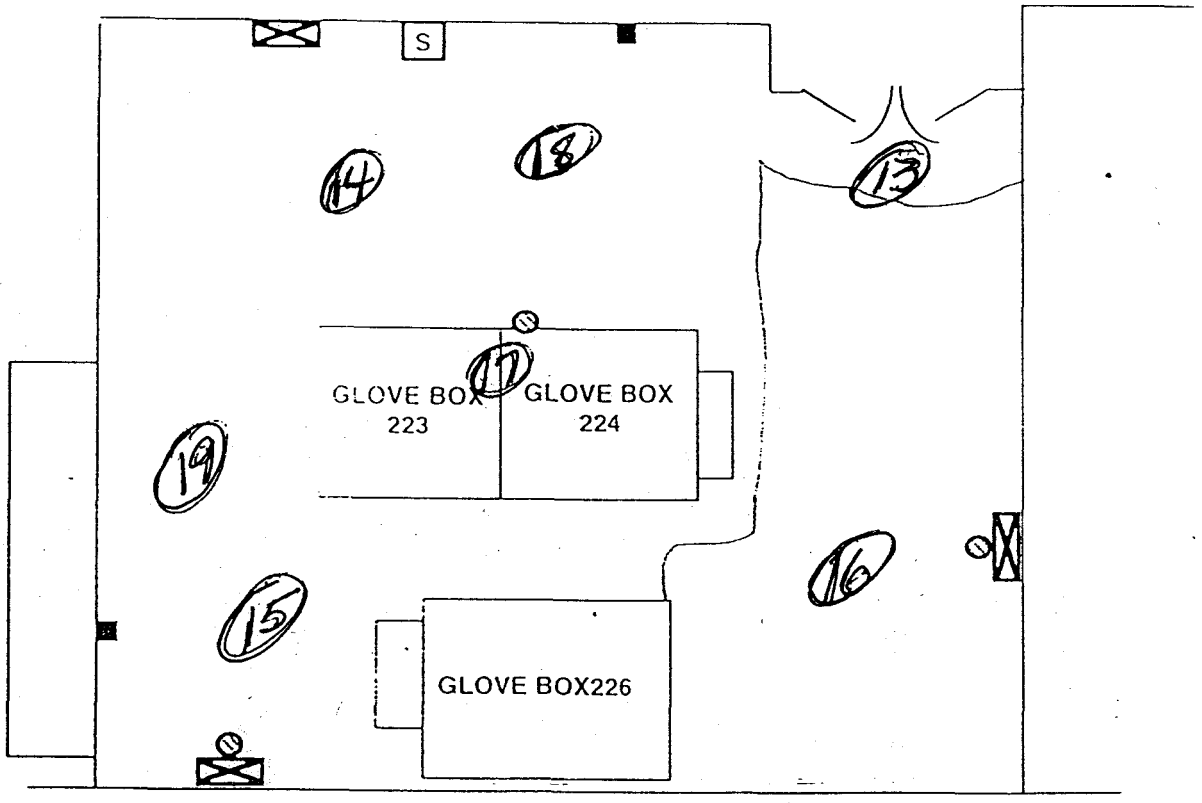

LEGEND:

-- Exhaust Duct

--Supply Duct

--F N A D

--S A A M

--Air Head

N
W
E
S

NOTES:

2 3

PLERS (Signature) TONYA SANGALINE / T-779 X-5392 / PAGER-3052

RT IDENTIFICATION NUMBER (RIN) 98D-1540 LAB/LOCATION: RECRA

TS CONTRACTOR RMRS

CKY FLATS
VIRONMENTAL TECHNOLOGY SITE
AIN OF CUSTODY NUMBER _____

TIME	EVENT	BOTTLE	USER ID	LOCATION	~~CONTAINER~~ Room	MATRIX	Preservation: Cooled to 4°C	NaOH	HNO3	H2SO4	HCl	Analytes: NROJA001
98 1040	N/A	N/A	F-013	779	157	WHAT-41 FILTER PAPER						P
			F-014									P
			F-015									P
			F-016									P
			E-017									P
			OH-018									P
			OH-019									P
98 1400			F-020	779	160							P
			F-021									P
			F-022									P
			F-023									P
			F-024									P

	Date	Time	Received By/Organization	Date	Time
K	3/27/98	3:30	J Sangaline	3-27-98	3:30
	3/30/98	10:15	D Karen Olson	3-30-98	10:15
Olson	3/30/98	1455	L. Miller / ASI	3/30/98	1455

LABORATORY USE ONLY (19)	Y/N
PCKG REC'D/CUSTODY SEALS INTACT	
SAMPLE LABELS/COCs AGREE	
TEMPERATURE AT TIME OF RECEIPT ___ °C	

Charge # KT03CX00
Project 779 D&D

nts: Overnight Delivery ☐ 2-Day Delivery ☐ Air Bill No _____

APO COC 6/5/97

Non-Radiological Report
B779 A-Annex
Page C53 of C111

Building 779, Room 157 Beryllium Surface Control Levels

May 5, 1998

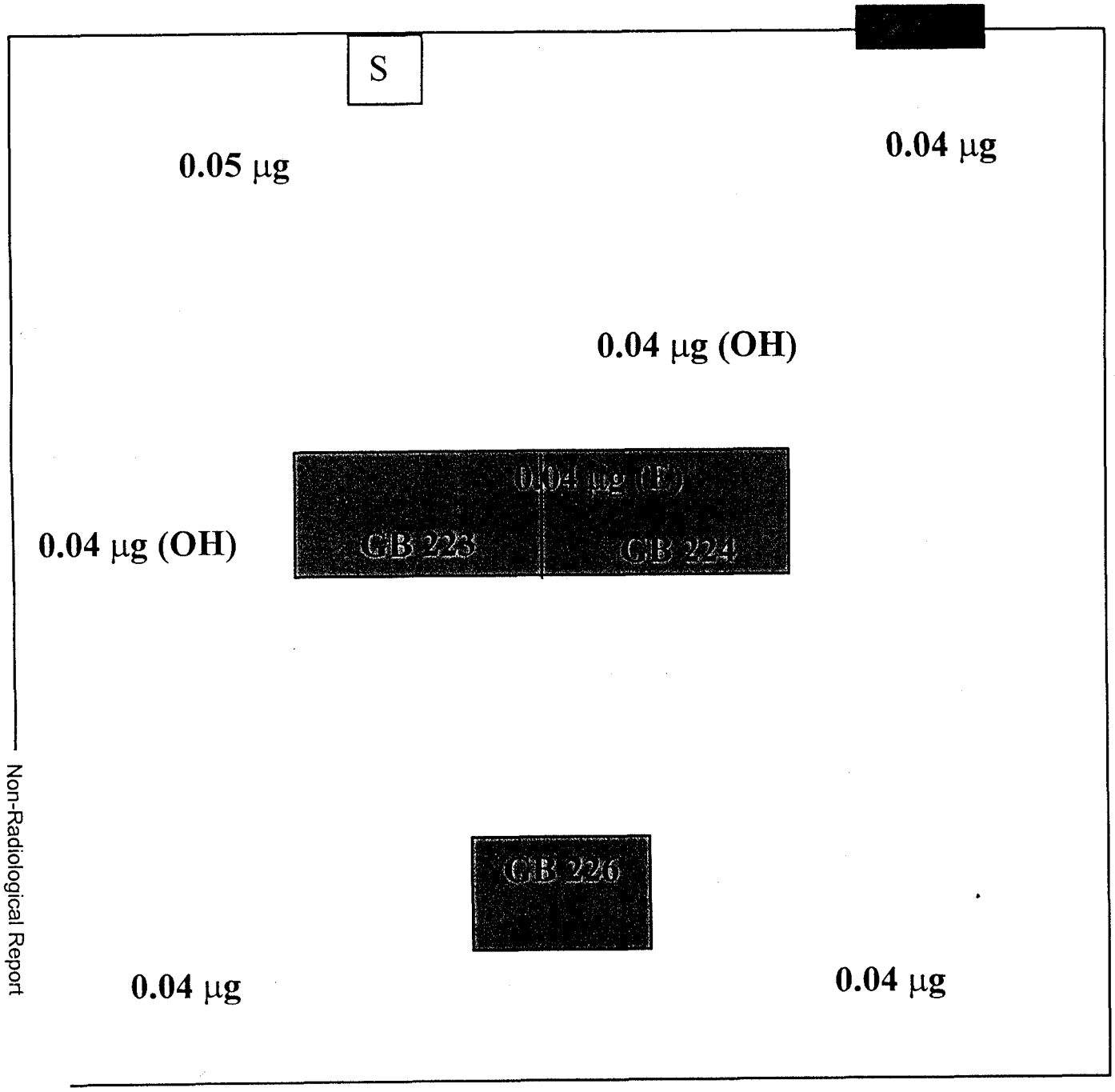

N

(OH) Overhead
(E) Equipment
•All other smears taken on the floor
•All results below surface control levels
•Reported in Micrograms per square foot

Recra LabNet - Lionville

INORGANICS DATA SUMMARY REPORT 04/07/98

CLIENT: K-H RIN#98D1840 RECRA LOT #: 9803L163

WORK ORDER: 11830-001-001-9999-00

SAMPLE	SITE ID	ANALYTE	RESULT	UNITS	REPORTING LIMIT	DILUTION FACTOR
-001	E-001	Beryllium, Total	0.04 u	UG	0.04	1.0
-002	E-002	Beryllium, Total	0.06	UG	0.04	1.0
-003	E-003	Beryllium, Total	0.12	UG	0.04	1.0
-004	E-004	Beryllium, Total	0.06	UG	0.04	1.0
-005	F-005	Beryllium, Total	0.04 u	UG	0.04	1.0
-006	F-006	Beryllium, Total	0.04	UG	0.04	1.0
-007	F-007	Beryllium, Total	0.07	UG	0.04	1.0
-008	E-008	Beryllium, Total	0.04 u	UG	0.04	1.0
-009	F-009	Beryllium, Total	0.05	UG	0.04	1.0
-010	F-010	Beryllium, Total	0.07	UG	0.04	1.0
-011	OH-011	Beryllium, Total	0.21	UG	0.04	1.0
-012	OH-012	Beryllium, Total	0.34	UG	0.04	1.0
-013	F-013	Beryllium, Total	0.04 u	UG	0.04	1.0
-014	F-014	Beryllium, Total	0.05	UG	0.04	1.0
-015	F-015	Beryllium, Total	0.04 u	UG	0.04	1.0
-016	F-016	Beryllium, Total	0.04 u	UG	0.04	1.0
-017	E-017	Beryllium, Total	0.04 u	UG	0.04	1.0
-018	OH-018	Beryllium, Total	0.04 u	UG	0.04	1.0
-019	OH-019	Beryllium, Total	0.04 u	UG	0.04	1.0
-020	F-020	Beryllium, Total	0.04 u	UG	0.04	1.0

97

Recra LabNet - Lionville

INORGANICS DATA SUMMARY REPORT 04/07/98

CLIENT: K-H RIN#98D1540 RECRA LOT #: 9803L163

WORK ORDER: 11830-001-001-9999-00

SAMPLE	SITE ID	ANALYTE	RESULT	UNITS	REPORTING LIMIT	DILUTION FACTOR
-021	F-021	Beryllium, Total	0.04 u	UG	0.04	1.0
-022	F-022	Beryllium, Total	0.04 u	UG	0.04	1.0
-023	F-023	Beryllium, Total	0.04 u	UG	0.04	1.0
-024	F-024	Beryllium, Total	0.04 u	UG	0.04	1.0
-025	E-025	Beryllium, Total	0.04 u	UG	0.04	1.0
-026	E-026	Beryllium, Total	0.04 u	UG	0.04	1.0
-027	OH-027	Beryllium, Total	0.04 u	UG	0.04	1.0
-028	OH-028	Beryllium, Total	0.04 u	UG	0.04	1.0
-029	E-029	Beryllium, Total	0.04 u	UG	0.04	1.0

	A	B	C	D	E	F	G
1	***Room Number***	***Date***	***Sample Number***	***Reporting Limit*** *micro grams/100cm2*	***Location/Description***	***Smear Results*** *micro grams/100cm2*	***Sample Method or RIN#***
312	160	3/27/98	F-020	NA	Floor South Doorway	0.04	98D1540
313	160	3/27/98	F-021	NA	Floor east of GB 863	0.04	98D1540
314	160	3/27/98	F-022	NA	Floor north	0.04	98D1540
315	160	3/27/98	F-023	NA	Floor	0.04	98D1540
316	160	3/27/98	F-024	NA	Floor Northwest Corner	0.04	98D1540
317	160	3/27/98	E-025	NA	Equipment GB 857	0.04	98D1540
318	160	3/27/98	E-026	NA	Work Table south wall	0.04	98D1540
319	160	3/27/98	OH-027	NA	Overhead middle of room	0.04	98D1540
320	160	3/27/98	OH-028	NA	Overhead southeast	0.04	98D1540
321	160	3/27/98	E-029	NA	Equipment GB 862	0.04	98D1540

* Analysis for Be using NIOSH method 7300 elements by IGP

99

SAMPLERS (Signature) TONYA SANGALINE / T-779 X-5392 / PAGER-3052

REPORT IDENTIFICATION NUMBER (RIN) 98D-1540 LAB/LOCATION: RECRA

RFETS CONTRACTOR RMRS

ROCKY FLATS
ENVIRONMENTAL TECHNOLOGY SITE
CHAIN OF CUSTODY NUMBER _____

DATE	TIME	EVENT	BOTTLE	USER ID	LOCATION	~~CONTAINER~~ Room	MATRIX	Preservation: Cooled to 4°C	NaOH	HNO3	H2SO4	HCl	Analytes: NRO1A001
3/27/98	1040	N/A	N/A	F-013	779	157	WHAT-41 FILTER PAPER						P
				F-014									P
				F-015									P
				F-016									P
				E-017									P
				OH-018									P
				OH-019									P
3/27/98	1400			F-020	779	160							P
				F-021									P
				F-022									P
				F-023									P
				F-024									P

	Date	Time	Received By/Organization	Date	Time
[illegible]	3/27/98	3:30	J Sangaline	3-27-98	3:30
[illegible]	3/30/98	10:15	D Karen Olson	3-30-98	10:15
n Olson	3/30/98	1455	S. Miller / IAST	3/30/98	1455

LABORATORY USE ONLY (19)	Y/N
PCKG REC'D/CUSTODY SEALS INTACT	
SAMPLE LABELS/COCs AGREE	
TEMPERATURE AT TIME OF RECEIPT ___°C	

Charge # KTO3CX00

Project 779 D&D

quirements Overnight Delivery ☐ 2-Day Delivery ☐ Air Bill No _____

APO COC 6/5/97

2 3

SAMPLERS (Signature) TONYA SANGALINE / T-779 X-5392 / PAGER-3052

REPORT IDENTIFICATION NUMBER (RIN) 98D-1540 LAB/LOCATION: RECRA

RFETS CONTRACTOR RMRS

ROCKY FLATS
ENVIRONMENTAL TECHNOLOGY SITE
CHAIN OF CUSTODY NUMBER _____

DATE	TIME	EVENT	BOTTLE	USER ID	LOCATION	~~CONTAINER~~ ROOM	MATRIX	Preservation: Cooled to 4° C	NaOH	HNO3	H2SO4	HCl		Analytes: NROIA001												
3-27-98	1400	N/A	N/A	E-025	779	160	WHAT-41 Filter Paper							P												
				E-026										P												
				OH-027										P												
				OH-028										P												
				E-029										P												

	Date	Time	Received By/Organization	Date	Time
	3/27/98	13:30	J. Sangalino	3-27/98	13:30
	3/30/98	10:15	Karen Olson	3-30-98	10:15
Olson	3/30/98	1455	S. Miller / ASI	3/30/98	1455

LABORATORY USE ONLY (19)	Y/N
PCKG REC'D/CUSTODY SEALS INTACT	
SAMPLE LABELS/COCs AGREE	
TEMPERATURE AT TIME OF RECEIPT ___ °C	

Charge # KT0.36.X00

Project 779 D&D

ements: Overnight Delivery ☐ 2-Day Delivery ☐ Air Bill No _____

APO COC 6/5/97

ROCKY FLATS ENVIRONMENTAL TECHNOLOGY SITE

5 of 6

ROOMS 156, 160 & 160A

Drawing Showing Survey Points

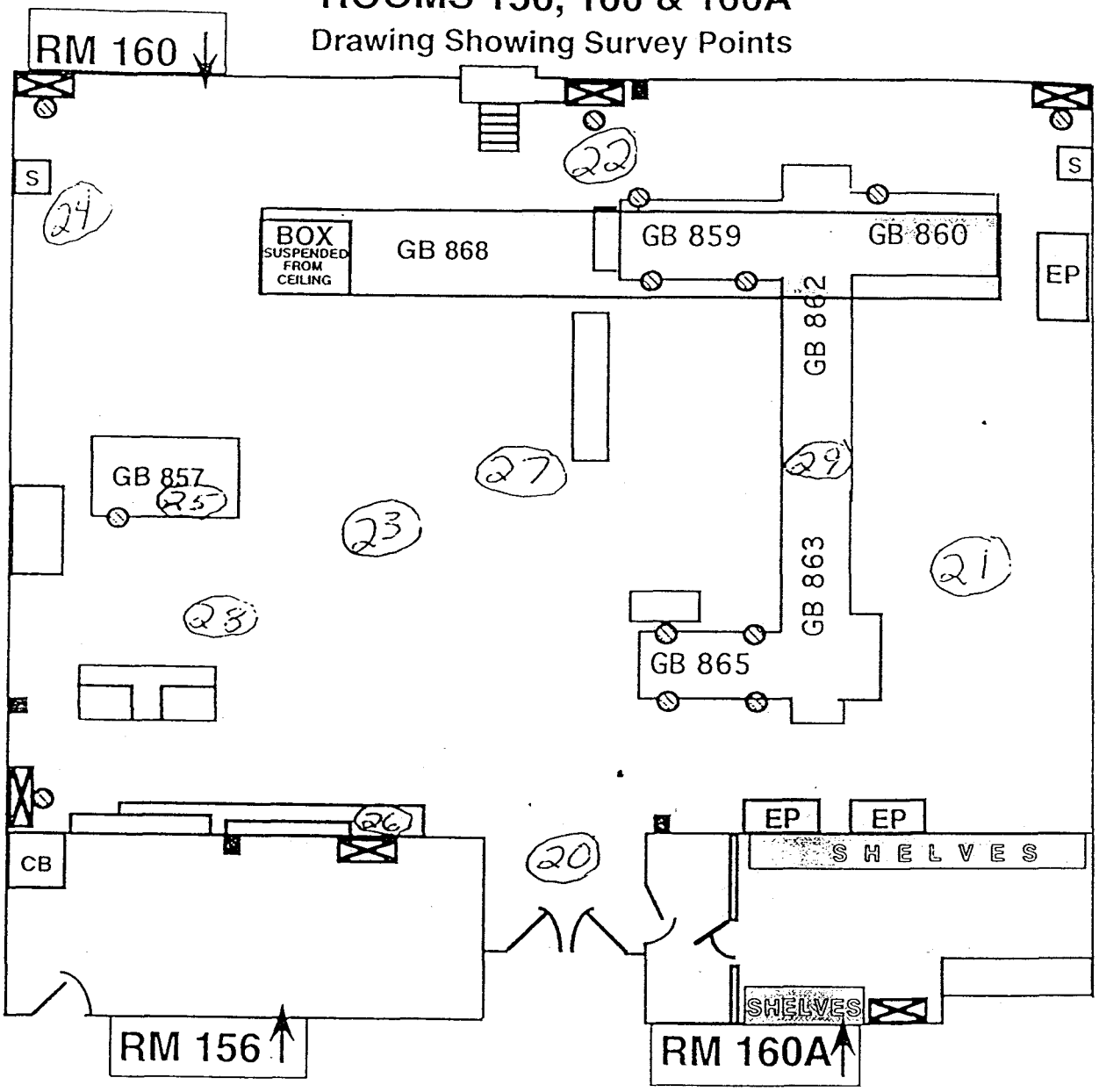

LEGEND:

EP -- Electrical panel

CB -- Cabinet

-- Exhaust Duct

N

W

E

S

■ –F N A D

i –S A A M

102 –Air Head

NOTES:

Building 779, Room 160, Beryllium Surface Control Levels

May 5, 1998

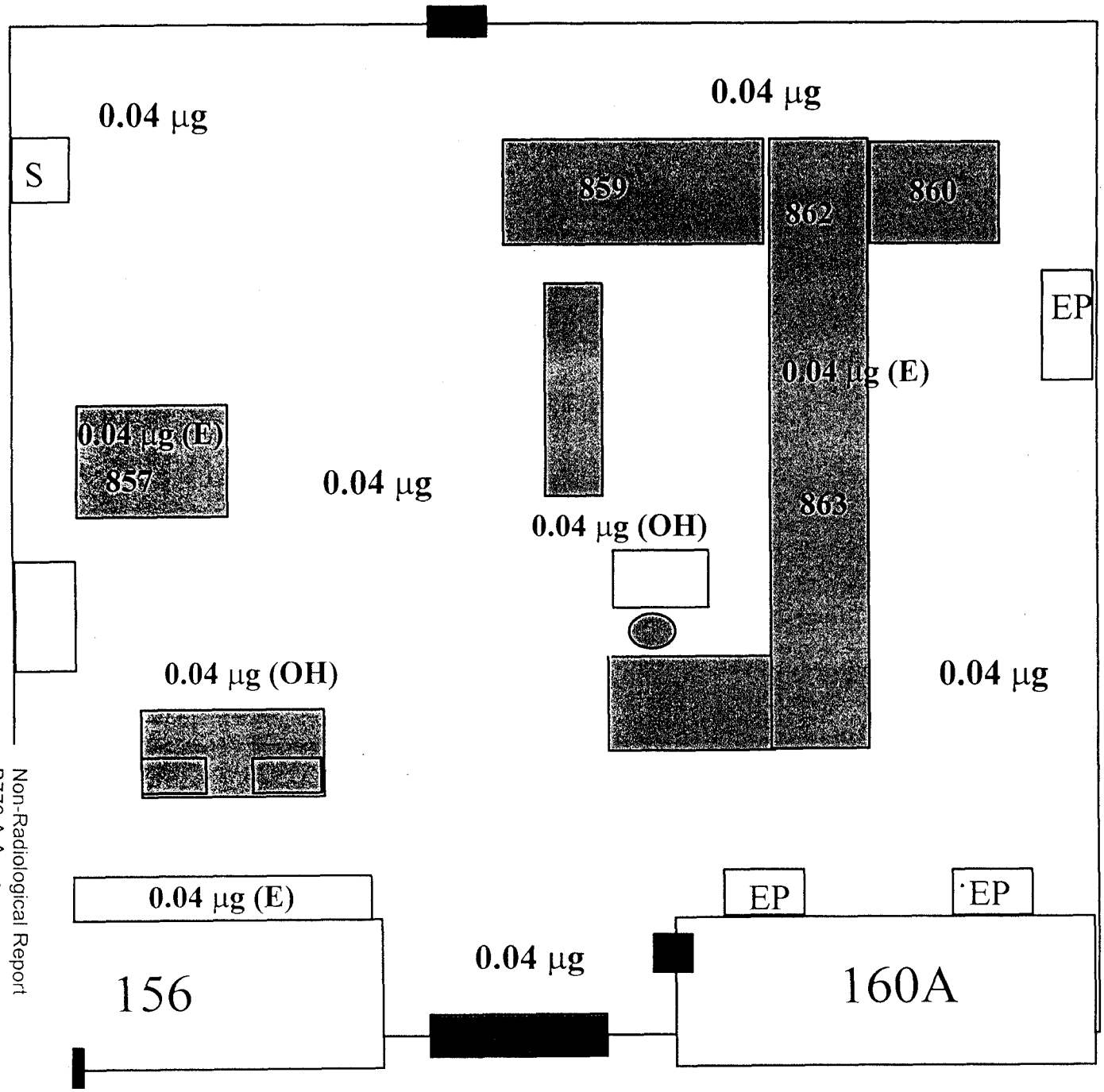

N

(OH) Overhead
(E) Equipment
•All other locations taken on the floor
•All results below surface control levels
•Reported in Micrograms per square foot

103

Recra LabNet - Lionville

INORGANICS DATA SUMMARY REPORT 04/07/98

CLIENT: K-H RIN898D1840 RECRA LOT #: 9803L163

WORK ORDER: 11830-001-001-9999-00

SAMPLE	SITE ID	ANALYTE	RESULT	UNITS	REPORTING LIMIT	DILUTION FACTOR
-001	H-001	Beryllium, Total	0.04 u	UG	0.04	1.0
-002	H-002	Beryllium, Total	0.06	UG	0.04	1.0
-003	H-003	Beryllium, Total	0.12	UG	0.04	1.0
-004	H-004	Beryllium, Total	0.08	UG	0.04	1.0
-005	F-005	Beryllium, Total	0.04 u	UG	0.04	1.0
-006	F-006	Beryllium, Total	0.04	UG	0.04	1.0
-007	F-007	Beryllium, Total	0.07	UG	0.04	1.0
-008	H-008	Beryllium, Total	0.04 u	UG	0.04	1.0
-009	F-009	Beryllium, Total	0.05	UG	0.04	1.0
-010	F-010	Beryllium, Total	0.07	UG	0.04	1.0
-011	OH-011	Beryllium, Total	0.21	UG	0.04	1.0
-012	OH-012	Beryllium, Total	0.34	UG	0.04	1.0
-013	F-013	Beryllium, Total	0.04 u	UG	0.04	1.0
-014	F-014	Beryllium, Total	0.05	UG	0.04	1.0
-015	F-015	Beryllium, Total	0.04 u	UG	0.04	1.0
-016	F-016	Beryllium, Total	0.04 u	UG	0.04	1.0
-017	H-017	Beryllium, Total	0.04 u	UG	0.04	1.0
-018	OH-018	Beryllium, Total	0.04 u	UG	0.04	1.0
-019	OH-019	Beryllium, Total	0.04 u	UG	0.04	1.0
-020	F-020	Beryllium, Total	0.04 u	UG	0.04	1.0

104

Recra LabNet - Lionville

INORGANICS DATA SUMMARY REPORT 04/07/98

CLIENT: K-H RIN#98D1540

WORK ORDER: 11830-001-001-9999-00

RECRA LOT #: 9803L163

SAMPLE	SITE ID	ANALYTE	RESULT	UNITS	REPORTING LIMIT	DILUTION FACTOR
-021	F-021	Beryllium, Total	0.04 u	UG	0.04	1.0
-022	F-022	Beryllium, Total	0.04 u	UG	0.04	1.0
-023	F-023	Beryllium, Total	0.04 u	UG	0.04	1.0
-024	F-024	Beryllium, Total	0.04 u	UG	0.04	1.0
-025	E-025	Beryllium, Total	0.04 u	UG	0.04	1.0
-026	E-026	Beryllium, Total	0.04 u	UG	0.04	1.0
-027	OH-027	Beryllium, Total	0.04 u	UG	0.04	1.0
-028	OH-028	Beryllium, Total	0.04 u	UG	0.04	1.0
-029	E-029	Beryllium, Total	0.04 u	UG	0.04	1.0

106

	A	B	C	D	E	F	G
1	Room Number	Date	Sample Number	Reporting Limit micro grams/100cm2	Location/Description	Smear Results micro grams/100cm2	Sample Method or RIN#
322	162	4/9/98	162-1	NA	Equipment Monarch Lathe	0.41	98D1698
323	162	4/9/98	162-2	NA	Equipment Monarch Lathe	3.40	98D1698
324	162	4/9/98	162-3	NA	Equipment Monarch Lathe	2.00	98D1698
325	162	4/9/98	162-4	NA	Equipment Monarch Lathe	0.27	98D1698
326	162	4/9/98	162-5	NA	Equipment Monarch Lathe	1.80	98D1698
327	162	4/9/98	162-6	NA	Equipment Monarch Lathe	2.20	98D1698
328	162	4/9/98	162-7	NA	Equipment Monarch Lathe	0.09	98D1698
329	162	4/9/98	162-8	NA	Equipment southbend 1307 Lathe	0.30	98D1698
330	162	4/9/98	162-9	NA	Equipment southbend 1307 Lathe	0.56	98D1698
331	162	4/9/98	162-10	NA	Equipment southbend 1307 Lathe	0.22	98D1698
332	162	4/9/98	162-11	NA	Equipment southbend 1307 Lathe	0.09	98D1698
333	162	4/9/98	162-12	NA	Equipment southbend 1307 Lathe	0.09	98D1698
334	162	4/9/98	162-13	NA	Equipment southbend 1307 Lathe	0.09	98D1698
335	162	4/9/98	162-14	NA	Equipment Hardinge Lathe	0.09	98D1698
336	162	4/9/98	162-15	NA	Equipment Hardinge Lathe	0.09	98D1698
337	162	4/9/98	162-16	NA	Equipment Hardinge Lathe	0.09	98D1698
338	162	4/9/98	162-17	NA	Equipment Hardinge Lathe	0.09	98D1698
339	162	4/9/98	162-18	NA	Equipment Hardinge Lathe	0.09	98D1698
	162	4/9/98	162-19	NA	Equipment Hardinge Lathe	0.09	98D1698
	162	4/9/98	162-20	NA	Equipment Hardinge Lathe	0.09	98D1698
	162	4/9/98	162-21	NA	Equipment Heald Aximatic Lathe	2.70	98D1698
	162	4/9/98	162-22	NA	Equipment Heald Aximatic Lathe	0.09	98D1698
	162	4/9/98	162-23	NA	Equipment Heald Aximatic Lathe	0.12	98D1698
	162	4/9/98	162-24	NA	Equipment Heald Aximatic Lathe	0.09	98D1698
	162	4/9/98	162-25	NA	Equipment Heald Aximatic Lathe	0.12	98D1698
	162	4/9/98	162-26	NA	Equipment Heald Aximatic Lathe	0.13	98D1698
	162	4/9/98	162-27	NA	Equipment Do All Band Saw	0.09	98D1698
	162	4/9/98	162-28	NA	Equipment Do All Band Saw	0.09	98D1698
	162	4/9/98	162-29	NA	Equipment Do All Band Saw	0.09	98D1698
	162	4/9/98	162-30	NA	Equipment Do All Band Saw	0.09	98D1698

* Analysis for Be using NIOSH method 7300 elements by IGP

	A	B	C	D	E	F	G
1	Room Number	Date	Sample Number	Reporting Limit micro grams/100cm2	Location/Description	Smear Results micro grams/100cm2	Sample Method or RIN#
352	162	4/9/98	162-31	NA	Equipment Alzmetall Drill Press	0.12	98D1698
353	162	4/9/98	162-32	NA	Equipment Alzmetall Drill Press	0.09	98D1698
354	162	4/9/98	162-33	NA	Equipment Alzmetall Drill Press	0.09	98D1698
355	162	4/9/98	162-34	NA	Equipment Alzmetall Drill Press	0.09	98D1698
356	162	4/9/98	162-35	NA	Equipment Alzmetall Drill Press	0.09	98D1698
357	162	4/9/98	162-36	NA	Equipment Bridgeport Drill Press	0.09	98D1698
358	162	4/9/98	162-37	NA	Equipment Bridgeport Drill Press	0.09	98D1698
359	162	4/9/98	162-38	NA	Equipment Bridgeport Drill Press	0.09	98D1698
360	162	4/9/98	162-39	NA	Equipment Bridgeport Drill Press	0.09	98D1698
361	162	4/9/98	162-40	NA	Equipment Bridgeport Drill Press	0.09	98D1698
362	162	4/9/98	162-41	NA	Equipment Moore Jig Bore	0.09	98D1698
363	162	4/9/98	162-42	NA	Equipment Moore Jig Bore	0.09	98D1698
364	162	4/9/98	162-43	NA	Equipment Moore Jig Bore	0.09	98D1698
365	162	4/9/98	162-44	NA	Equipment Moore Jig Bore	0.09	98D1698
366	162	4/9/98	162-45	NA	Equipment Moore Jig Bore	0.09	98D1698
367	162	4/9/98	162-46	NA	Equip Kolee Company Surface Grinder	0.09	98D1698
368	162	4/9/98	162-47	NA	Equip Kolee Company Surface Grinder	0.09	98D1698
369	162	4/9/98	162-48	NA	Equip Kolee Company Surface Grinder	0.09	98D1698
	162	4/9/98	162-49	NA	Equip Kolee Company Surface Grinder	0.09	98D1698
	162	4/9/98	162-50	NA	Equip Kolee Company Surface Grinder	0.09	98D1698
	162	4/9/98	162-51	NA	Equip Kolee Company Surface Grinder	0.09	98D1698
	162	3/19/99	779-99-03-13-162-01	0.1	Floor	<0.1	*
	162	3/19/99	779-99-03-13-162-02	0.1	Floor	<0.1	*
	162	3/19/99	779-99-03-13-162-03	0.1	Floor	<0.1	*
	162	3/19/99	779-99-03-13-162-04	0.1	Floor	<0.1	*
	162	3/19/99	779-99-03-13-162-05	0.1	Floor	<0.1	*
	162	3/19/99	779-99-03-13-162-06	0.1	Floor	<0.1	*
	162	3/19/99	779-99-03-13-162-07	0.1	Floor	<0.1	*
	162	3/19/99	779-99-03-13-162-08	0.1	Floor	<0.1	*
	162	3/19/99	779-99-03-13-162-09	0.1	Floor	<0.1	*

* Analysis for Be using NIOSH method 7300 elements by IGP

	A	B	C	D	E	F	G
1	Room Number	Date	Sample Number	Reporting Limit micro grams/100cm2	Location/Description	Smear Results micro grams/100cm2	Sample Method or RIN#
382	162	3/19/99	779-99-03-13-162-010	0.1	Floor	<0.1	*
383	162	3/19/99	779-99-03-13-162-MON-01	0.1	Monarch Lathe	<0.1	*
384	162	3/19/99	779-99-03-13-162-MON-02	0.1	Monarch Lathe	0.50	*
385	162	3/19/99	779-99-03-13-162-SOU-03	0.1	Southbend 1307 Lathe	<0.1	*
386	162	3/19/99	779-99-03-13-162-SOU-04	0.1	Southbend 1307 Lathe	<0.1	*
387	162	3/19/99	779-99-03-13-162-HAR-05	0.1	Harding Lathe	<0.1	*
388	162	3/19/99	779-99-03-13-162-HAR-06	0.1	Harding Lathe	<0.1	*
389	162	3/19/99	779-99-03-13-162-HEA-07	0.1	Heald Alzmatic Lathe	<0.1	*
390	162	3/19/99	779-99-03-13-162-HEA-08	0.1	Heald Alzmatic Lathe	0.20	*
391	162	3/19/99	779-99-03-13-162-DAB-09	0.1	Do All Bandsaw	<0.1	*
392	162	3/19/99	779-99-03-13-162-DAB-10	0.1	Do All Bandsaw	<0.1	*
393	162	3/19/99	779-99-03-13-162-ALZ-11	0.1	Alzmetall Drill Press	<0.1	*
394	162	3/19/99	779-99-03-13-162-ALZ-12	0.1	Alzmetall Drill Press	<0.1	*
395	162	3/19/99	779-99-03-13-162-BRI-13	0.1	Bridge Port Drill Press	<0.1	*
396	162	3/19/99	779-99-03-13-162-BRI-14	0.1	Bridge Port Drill Press	<0.1	*
397	162	3/19/99	779-99-03-13-162-MOO-15	0.1	Moore Jig Bore	<0.1	*
398	162	3/19/99	779-99-03-13-162-MOO-16	0.1	Moore Jig Bore	<0.1	*
	162	3/19/99	779-99-03-13-162-KOL-17	0.1	Kolee Surface Grinder	<0.1	*
	162	3/19/99	779-99-03-13-162-KOL-18	0.1	Kolee Surface Grinder	<0.1	*
	162	3/20/99	779-99-03-09-13-162-01	0.1	SOP Area Floor	<0.1	
	162	3/20/99	779-99-03-09-13-162-02	0.1	SOP Area Floor	<0.1	
	162	3/20/99	779-99-03-09-13-162-03	0.1	SOP Area Floor	<0.1	
	162	3/20/99	779-99-03-09-13-162-04	0.1	SOP Area Floor	<0.1	
	162	3/20/99	779-99-03-09-13-162-05	0.1	SOP Area Floor	<0.1	
	162	3/20/99	779-99-03-09-13-162-06	0.1	SOP Area Floor	<0.1	
	162	3/20/99	779-99-03-09-13-162-07	0.1	SOP Area Floor	<0.1	
	162	3/20/99	779-99-03-09-13-162-08	0.1	SOP Area Floor	<0.1	
	162	4/5/99	779-99-03-24-13-162-01	0.1	(OH) Light	<0.1 q/100cm2	BEAST
	162	4/5/99	779-99-03-24-13-162-02	0.1	(OH) Light	<0.1 q/100cm2	BEAST
	162	4/5/99	779-99-03-24-13-162-03	0.1	(OH) Light	<0.1 q/100cm2	BEAST

* Analysis for Be using NIOSH method 7300 elements by IGP

108

	A	B	C	D	E	F	G
1	***Room Number***	***Date***	***Sample Number***	***Reporting Limit*** *micro grams/100cm2*	***Location/Description***	***Smear Results*** *micro grams/100cm2*	***Sample Method or RIN#***
412	162	4/5/99	779-99-03-24-13-162-04	0.1	Metal Plate	<0.1 q/100cm2	BEAST
413	162	4/5/99	779-99-03-24-13-162-05	0.1	(OH) Electrical Box	<0.1 q/100cm2	BEAST
414	162	4/5/99	779-99-03-24-13-162-06	0.1	(OH) Light	<0.1 q/100cm2	BEAST
415	162	4/5/99	779-99-03-24-13-162-07	0.1	(OH) Light	<0.1 q/100cm2	BEAST
416	162	4/5/99	779-99-03-24-13-162-08	0.1	(OH) Be Duct	<0.1 q/100cm2	BEAST
417	162	4/5/99	779-99-03-24-13-162-09	0.1	(OH) Light	<0.1 q/100cm2	BEAST
418	162	4/5/99	779-99-03-24-13-162-10	0.1	(OH) Be Duct	<0.1 q/100cm2	BEAST
419	162	4/5/99	779-99-03-24-13-162-11	0.1	(OH) Be Duct	<0.1 q/100cm2	BEAST
420	162	4/5/99	779-99-03-24-13-162-12	0.1	(OH) Moore Jig Bore Electric Box	<0.1 q/100cm2	BEAST
421	162	4/5/99	779-99-03-24-13-162-13	0.1	Wall	<0.1 q/100cm2	BEAST
422	162	4/5/99	779-99-03-24-13-162-14	0.1	PA Horn	<0.1 q/100cm2	BEAST
423	162	4/5/99	779-99-03-24-13-162-15	0.1	Chalkboard Base	<0.1 q/100cm2	BEAST
424	162	4/5/99	779-99-03-24-13-162-16	0.1	Wall	<0.1 q/100cm2	BEAST
425	162	4/5/99	779-99-03-24-13-162-17	0.1	Heald Box	<0.1 q/100cm2	BEAST
426	162	4/5/99	779-99-03-24-13-162-18	0.1	Chair	<0.1 q/100cm2	BEAST
427	162	4/5/99	779-99-03-24-13-162-19	0.1	Door Handle	<0.1 q/100cm2	BEAST
428	162	4/5/99	779-99-03-24-13-162-20	0.1	Floor	<0.1 q/100cm2	BEAST
[illegible]	162	4/5/99	779-99-03-24-13-162-21	0.1	Respirator Mask	<0.1 q/100cm2	BEAST
	162	4/5/99	779-99-03-24-13-162-22	0.1	Respirator Mask	<0.1 q/100cm2	BEAST
	162	4/5/99	779-99-03-24-13-162-23	0.1	Respirator Mask	<0.1 q/100cm2	BEAST
	162	4/5/99	779-99-03-24-13-162-24	0.1	Respirator Mask	<0.1 q/100cm2	BEAST
	162	4/5/99	779-99-03-24-13-162-SOP-01	0.1	Floor	<0.1 q/100cm2	BEAST
	162	4/5/99	779-99-03-24-13-162-SOP-02	0.1	Floor	<0.1 q/100cm2	BEAST
	162	4/5/99	779-99-03-24-13-162-SOP-03	0.1	Floor	<0.1 q/100cm2	BEAST
	162	4/5/99	779-99-03-24-13-162-SOP-04	0.1	Floor	<0.1 q/100cm2	BEAST
	162	4/7/99	779-99-03-20-13-162-01	0.1	SW Exhaust Vent	<0.1	*
	162	4/7/99	779-99-03-20-13-162-02	0.1	SE Exhaust Vent	<0.1	*
	162	4/7/99	779-99-03-20-13-162-03	0.1	NW Exhaust Vent	<0.1	*
	162	4/7/99	779-99-03-20-13-162-04	0.1	NE Exhaust Vent	<0.1	*
	162	4/7/99	779-99-03-20-13-162-05	0.1	SOP Area	<0.1	*

* Analysis for Be using NIOSH method 7300 elements by IGP

109

	A	B	C	D	E	F	G
1	Room Number	Date	Sample Number	Reporting Limit micro grams/100cm2	Location/Description	Smear Results micro grams/100cm2	Sample Method or RIN#
442	162	4/7/99	779-99-03-20-13-162-06	0.1	SOP Area	<0.1	*
443	162	4/7/99	779-99-03-20-13-Duct-01	0.1	Duct Internal	<0.1	*
444	162	4/7/99	779-99-03-20-13-Duct-02	0.1	Duct Internal	<0.1	*
445	162	4/13/99	779-99-04-05-13-162-01	0.1	(OH) Fire Line	<0.1 q/100cm2	BEAST
446	162	4/13/99	779-99-04-05-13-162-02	0.1	(OH) Grate	<0.1 q/100cm2	BEAST
447	162	4/13/99	779-99-04-05-13-162-03	0.1	(OH) Light	<0.1 q/100cm2	BEAST
448	162	4/13/99	779-99-04-05-13-162-04	0.1	(OH) HP Vacuum	<0.1 q/100cm2	BEAST
449	162	4/13/99	779-99-04-05-13-162-05	0.1	(OH) Surge Grinder 1P8	<0.1 q/100cm2	BEAST
450	162	4/13/99	779-99-04-05-13-162-06	0.1	(OH) Light	<0.1 q/100cm2	BEAST
451	162	4/13/99	779-99-04-05-13-162-07	0.1	(OH) Light	<0.1 q/100cm2	BEAST
452	162	4/13/99	779-99-04-05-13-162-08	0.1	(OH) Monarch Lathe 1P9	0.1 q/100cm2	BEAST
453	162	4/13/99	779-99-04-05-13-162-09	0.1	(OH) Light	<0.1 q/100cm2	BEAST
454	162	4/13/99	779-99-04-05-13-162-10	0.1	(OH) LTS Bldg. 781/780	<0.1 q/100cm2	BEAST
455	162	4/13/99	779-99-04-05-13-162-11	0.1	(OH) Deck Above Double Doors	<0.1 q/100cm2	BEAST
456	162	4/13/99	779-99-04-05-13-162-12	0.1	(OH) Filter	<0.1 q/100cm2	BEAST
457	162	4/13/99	779-99-04-05-13-162-13	0.1	Process Waste Line Cap	<0.1 q/100cm2	BEAST
458	162	4/13/99	779-99-04-05-13-162-14	0.1	Floor	<0.1 q/100cm2	BEAST
	162	4/13/99	779-99-04-05-13-162-15	0.1	Floor	<0.1 q/100cm2	BEAST
	162	4/13/99	779-99-04-05-13-162-16	0.1	Floor	<0.1 q/100cm2	BEAST
	162	4/13/99	779-99-04-05-13-162-17	0.1	Floor	<0.1 q/100cm2	BEAST
	162	4/13/99	779-99-04-05-13-162-18	0.1	Floor	0.1 q/100cm2	BEAST
	162	4/13/99	779-99-04-05-13-162-19	0.1	Floor	<0.1 q/100cm2	BEAST
	162	4/13/99	779-99-04-05-13-162-20	0.1	Floor	0.2 q/100cm2	BEAST
	162	4/13/99	779-99-04-05-13-162-21	0.1	Floor	0.1 q/100cm2	BEAST
	162	4/13/99	779-99-04-05-13-162-22	0.1	Floor	<0.1 q/100cm2	BEAST
	162	4/13/99	779-99-04-05-13-162-23	0.1	Floor	<0.1 q/100cm2	BEAST
	162	4/13/99	779-99-04-05-13-162-24	0.1	Floor	<0.1 q/100cm2	BEAST
	162	4/13/99	779-99-04-05-13-162-SOP-01	0.1	Floor	<0.1 q/100cm2	BEAST
	162	4/13/99	779-99-04-05-13-162-SOP-02	0.1	Floor	<0.1 q/100cm2	BEAST
	162	4/13/99	779-99-04-05-13-162-SOP-03	0.1	Floor	<0.1 q/100cm2	BEAST

* Analysis for Be using NIOSH method 7300 elements by IGP

	A	B	C	D	E	F	G
1	***Room Number***	***Date***	***Sample Number***	***Reporting Limit*** *micro grams/100cm2*	***Location/Description***	***Smear Results*** *micro grams/100cm2*	***Sample Method or RIN#***
472	162	4/13/99	779-99-04-05-13-162-SOP-04	0.1	Floor	<0.1 q/100cm2	BEAST
473	162	4/13/99	779-99-04-05-13-162-SOP-05	0.1	Floor	<0.1 q/100cm2	BEAST
474	162	4/13/99	779-99-04-05-13-162-SOP-06	0.1	Floor	<0.1 q/100cm2	BEAST
475	162	4/16/99	779-99-04-12-13-162-01	0.1	Floor	<0.1	*
476	162	4/16/99	779-99-04-12-13-162-02	0.1	Floor	<0.1	*
477	162	4/16/99	779-99-04-12-13-162-03	0.1	Floor	<0.1	*
478	162	4/16/99	779-99-04-12-13-162-04	0.1	Floor	<0.1	*
479	162	4/16/99	779-99-04-12-13-162-05	0.1	Floor	<0.1	*
480	162	4/16/99	779-99-04-12-13-162-06	0.1	Floor	<0.1	*
481	162	4/16/99	779-99-04-12-13-162-07	0.1	Floor	<0.1	*
482	162	4/16/99	779-99-04-12-13-162-08	0.1	Floor	<0.1	*

* Analysis for Be using NIOSH method 7300 elements by IGP

SAMPLERS (Signature) Tonya Sangalione / T-779 X-5392 / P-3052

REPORT IDENTIFICATION NUMBER (RIN) 98D1698 LAB/LOCATION: ~~RECRA~~ SW of Oklahoma

RFETS CONTRACTOR RMRS

ROCKY FLATS
ENVIRONMENTAL TECHNOLOGY SITE
CHAIN OF CUSTODY NUMBER _____

DATE	TIME	EVENT	BOTTLE	USER ID	LOCATION	CONTAINER	MATRIX	Preservation: Cooled to 4°C	NaOH	HNO3	H2SO4	HCl	Analytes: U R01A001	BE
4/9/98	1230	001	001	162-1	MONARCH LATHE	162-1	WHAT-MAN FILTER PAPER						R	
		002	002	162-2		162-2								
		003	003	162-3		162-3								
		004	004	162-4		162-4								
		005	005	162-5		162-5								
		006	006	162-6		162-6								
		007	007	162-7		162-7								
		008	008	162-8	SOUTHBEND LATHE	162-8								
		009	009	162-9		162-9								
		010	010	162-10		162-10								
		011	011	162-11		162-11								
		012	012	162-12		162-12								

Relinquished By:	Date	Time	Received By/Organization	Date	Time
T. Belnap	4-9-98	1715	Lock Box	4-9-98	1715
Lock Box	4-10-98	0930	D Karen Olson	4-10-98	0930
D Karen Olson	4-14-98	1400	K Make	4-14-98	1400

LABORATORY USE ONLY (19)	Y/N
PCKG REC'D/CUSTODY SEALS INTACT	
SAMPLE LABELS/COCs AGREE	
TEMPERATURE AT TIME OF RECEIPT ___ °C	

REMARKS:

Charge # KT03CX00

Project 779 D&D

Shipping Requirements: Overnight Delivery ☐ 2-Day Delivery ☐ Air Bill No _____

APO COC 6/5/97

SAMPLERS (Signature) Tonya Sangaline / T-779 X-5392 / P-3052 DRD

REPORT IDENTIFICATION NUMBER (RIN) 98D1698 LAB/LOCATION: ~~RECRA~~ SW of Okla

RFETS CONTRACTOR RMRS

ROCKY FLATS ENVIRONMENTAL TECHNOLOGY SITE CHAIN OF CUSTODY NUMBER _____

DATE	TIME	EVENT	BOTTLE	USER ID	LOCATION	CONTAINER	MATRIX	Preservation: Cooled to 4° C	NaOH	HNO3	H2 SO4	HCl	Analytes: NR01A001	BE
4-9-98	1240	013	013	162-13	SOUTHBEND LATHE	162-13	WHATMAN FILTER PAPER						R	
		014	014	162-14	HARDING LATHE	162-14								
		015	015	162-15		162-15								
		016	016	162-16		162-16								
		017	017	162-17		162-17								
		018	018	162-18		162-18								
		019	019	162-19		162-19								
		020	020	162-20	AXIMATIC LATHE	162-20								
		021	021	162-21		162-21								
		022	022	162-22		162-22								
		023	023	162-23		162-23								
		024	024	162-24		162-24								

quished By:	Date	Time	Received By/Organization	Date	Time
. Bernal	4-9-98	1215	Lockbox	4-9-98	1215
ock Box	4-10-98	0930	D Karen Olson	4-10-98	0930
Karen Olson	4-14-98	1400	K Malu	4-14-98	1400

LABORATORY USE ONLY (19)	Y/N
PCKG REC'D/CUSTODY SEALS INTACT	
SAMPLE LABELS/COCs AGREE	
TEMPERATURE AT TIME OF RECEIPT ___ °C	

ARKS:

Charge # KT0 3CX00

Project 779 D&D

ipping Requirements: Overnight Delivery ☐ 2-Day Delivery ☐ Air Bill No. _____

APO COC 6/5/97

SAMPLERS (Signature) Tonya Sangaline / T-779 X-5392 / P-3052 DKD

REPORT IDENTIFICATION NUMBER (RIN) 98D1698

LAB/LOCATION: ~~RESRA~~ SW of Oklahoma

RFETS CONTRACTOR RMRS

ROCKY FLATS ENVIRONMENTAL TECHNOLOGY SITE CHAIN OF CUSTODY NUMBER _____

DATE	TIME	EVENT	BOTTLE	USER ID	LOCATION	CONTAINER	MATRIX	Preservation: Cooled to 4° C	NaOH	HNO3	H2 SO4	HCl	Analytes: URO1A001	BE
4-9-98	1300	025	025	162-25	AUTOMATIC LATHE	162-25	WHAT-41 FILTER PAPER						R	
		026	026	162-26		162-26								
		027	027	162-27	DOALL BAND SAW	162-27								
		028	028	162-28		162-28								
		029	029	162-29		162-29								
		030	030	162-30		162-30								
		031	031	162-31	DRILL PRESS	162-31								
		032	032	162-32		162-32								
		033	033	162-33		162-33								
		034	034	162-34		162-34								
		035	035	162-35		162-35								
		036	036	162-36	BRIDGPORT DRILL PRESS	162-36								

quished By:	Date	Time	Received By/Organization	Date	Time
C. Bennett	4-9-98	1715	LockBox	4-9-98	1715
ock box	4-10-98	0930	DKarren Olson	4-10-98	0930
D Karen Olson	4-14-98	1400	KMabe	4-14-98	1406

LABORATORY USE ONLY (19)	Y/N
PCKG REC'D/CUSTODY SEALS INTACT	
SAMPLE LABELS/COCs AGREE	
TEMPERATURE AT TIME OF RECEIPT ___ °C	

MARKS:

Charge # KT03CX00

Project 779 DKD

hipping Requirements: Overnight Delivery ☐ 2-Day Delivery ☐ Air Bill No _____

APO COC 6/5/9

SAMPLERS (Signature) TONYA SANDARINE / T-779 X-5392 / PACC. 3052

REPORT IDENTIFICATION NUMBER (RIN) 98D1698 LAB/LOCATION: ~~RFETS~~ DRD ~~BK~~ SW of OKla

RFETS CONTRACTOR RMRS

ROCKY FLATS ENVIRONMENTAL TECHNOLOGY SITE CHAIN OF CUSTODY NUMBER _____

DATE	TIME	EVENT	BOTTLE	USER ID	LOCATION	CONTAINER	MATRIX	Preservation: Cooled to 4°C	NaOH	HNO3	H2SO4	HCl	Analytes: NRO1A00L	BE
4-9-98	1400	037	037	162-37	BRIDGEPORT DRILL PRESS	162-37	WHAT-41 FILTER PAPER						R	
		038	038	162-38		162-38								
		039	039	162-39		162-39								
		040	040	162-40		162-40								
		041	041	162-41	JIG BORE	162-41								
		042	042	162-42		162-42								
		043	043	162-43		162-43								
		044	044	162-44		162-44								
		045	045	162-45		162-45								
		046	046	162-46	SURFACE GRINDER	162-46								
		047	047	162-47		162-47								
		048	048	162-48		162-48								

quished By:	Date	Time	Received By/Organization	Date	Time
. Bend	4-9-98	1215	~~C. Bond~~ LOCKBOX	4-9-98	1215
ock Box	4-10-98	0930	D Karen Olson	4-10-98	0930
Karen Olson	4-14-98	1400	K Make	4-14-98	1406

LABORATORY USE ONLY (19)	Y/N
PCKG REC'D/CUSTODY SEALS INTACT	
SAMPLE LABELS/COCs AGREE	
TEMPERATURE AT TIME OF RECEIPT ___°C	

ARKS:

Charge # KT03CX00

Project 779 D&D

ipping Requirements: Overnight Delivery ☐ 2-Day Delivery ☐ Air Bill No. _____

APO COC 6/5/9

116

SAMPLERS (Signature) TONYA SANGRINE / T-779 X-5392 / P-3052

REPORT IDENTIFICATION NUMBER (RIN) 98D1698 LAB/LOCATION: ~~RECRA~~ DKO SW of Oklah

RFETS CONTRACTOR RMRS

ROCKY FLATS
ENVIRONMENTAL TECHNOLOGY SITE
CHAIN OF CUSTODY NUMBER _____

DATE	TIME	EVENT	BOTTLE	USER ID	LOCATION	CONTAINER	MATRIX	Preservation: Cooled to 4° C	NaOH	HNO3	H2SO4	HCl	Analytes: 2R01A001	BE
4-9-98	1400	049	049	162-49	SURFACE GRUNDER	162-49	WHAT-41 FILTER PAPER						R	
		050	050	162-50		162-50								
		051	051	162-51		162-51								

uished By:	Date	Time	Received By/Organization	Date	Time
. Bernal	4-9-98	1715	LOCKBOX	4-9-98	1715
ockbox	4-10-98	0930	D Karen Olson	4-10-98	0930
Karen Olson	4-14-98	1400	KMale	4-14-98	1400

LABORATORY USE ONLY (19)	Y/N
PCKG REC'D/CUSTODY SEALS INTACT	
SAMPLE LABELS/COCs AGREE	
TEMPERATURE AT TIME OF RECEIPT ___°C	

ARKS:

Charge # KT03CX00

Project 779 D&D

pping Requirements: Overnight Delivery ☐ 2-Day Delivery ☐ Air Bill No. _____

APO COC 6/5/97

PAGE 4 OF 12

Drawing Showing Survey Points

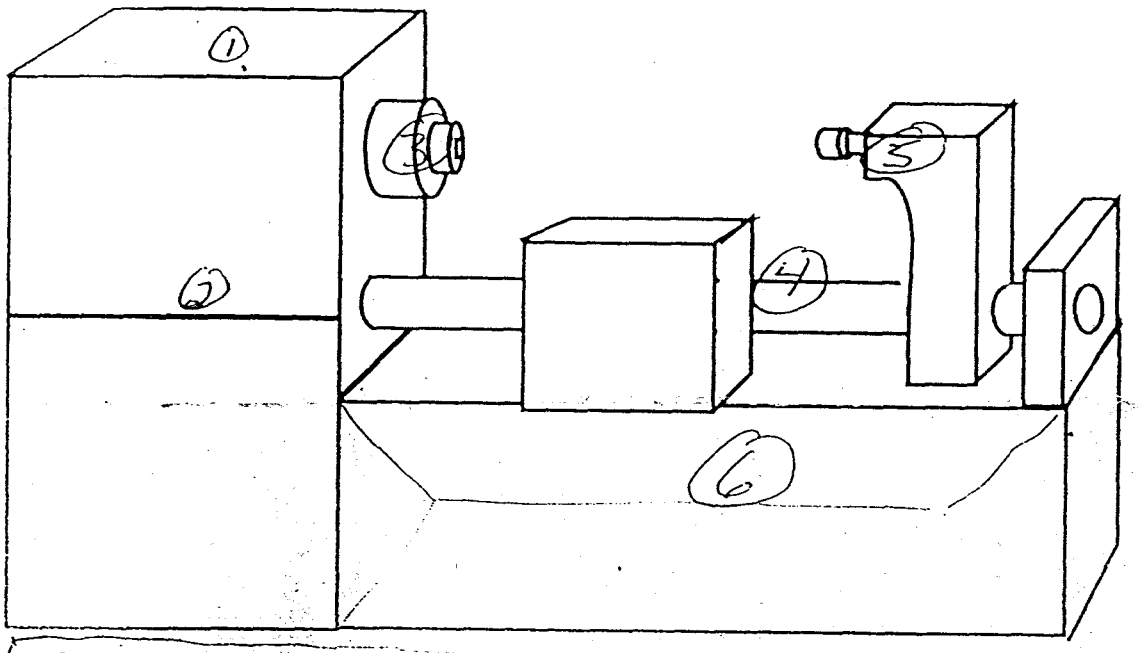

MONARCH LATHE
PROPERTY CONTROL # 00035884-00

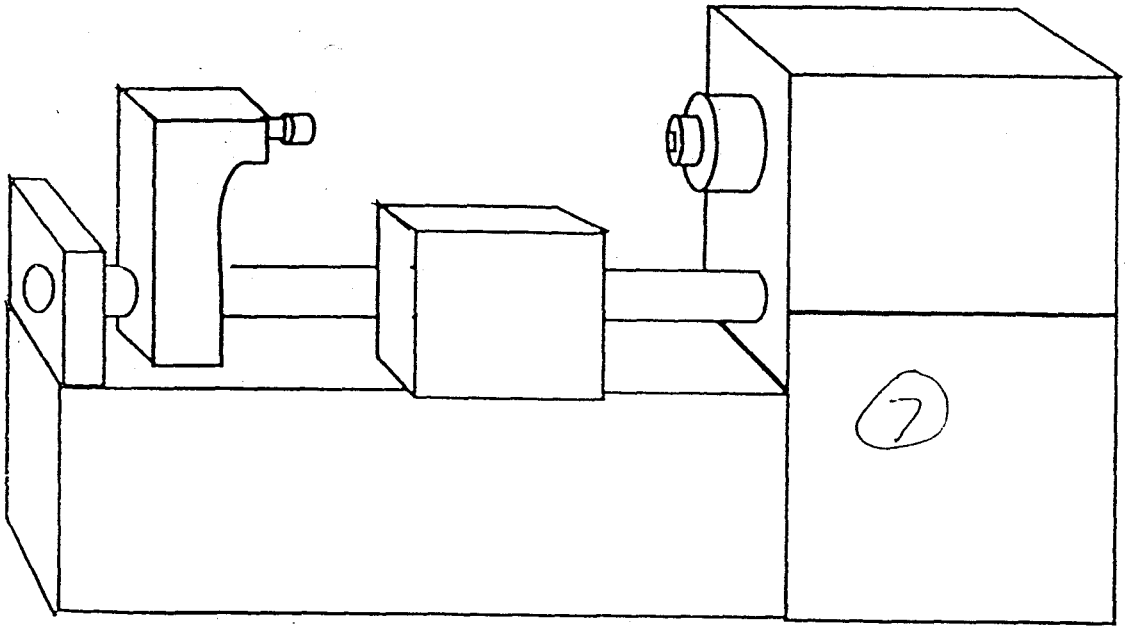

Drawing Showing Survey Points

PAGE 5 OF 7

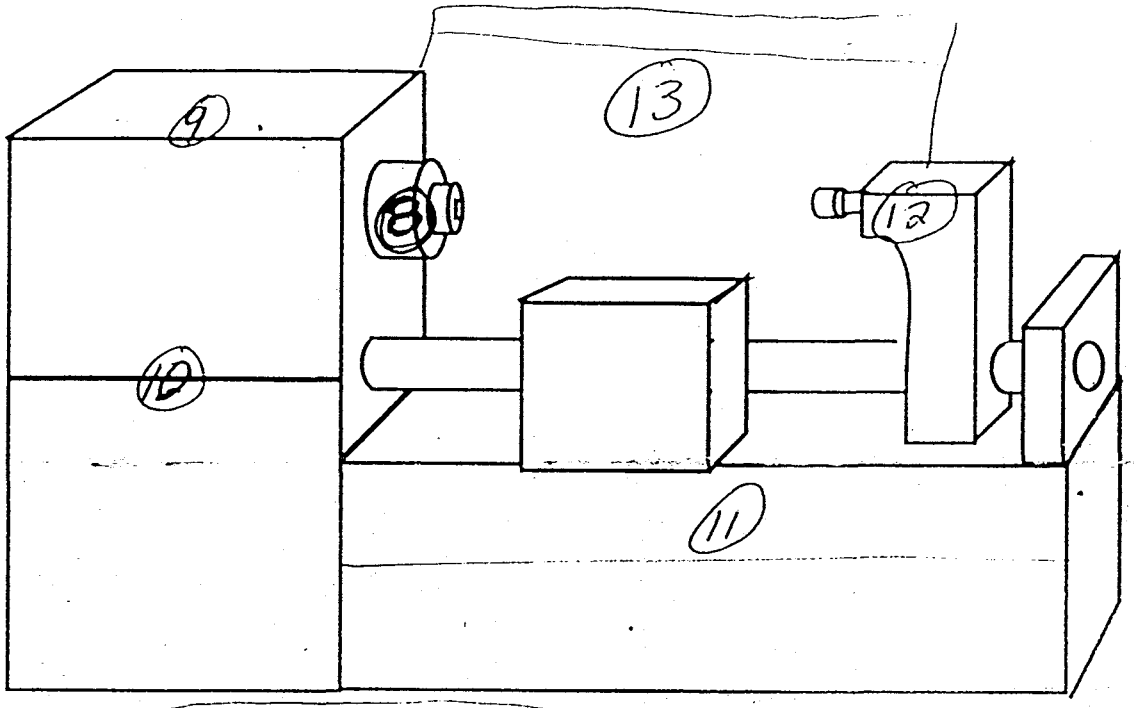

SOUTH BEND 1307 LATHE
PROPERTY CONTROL #00036452-00

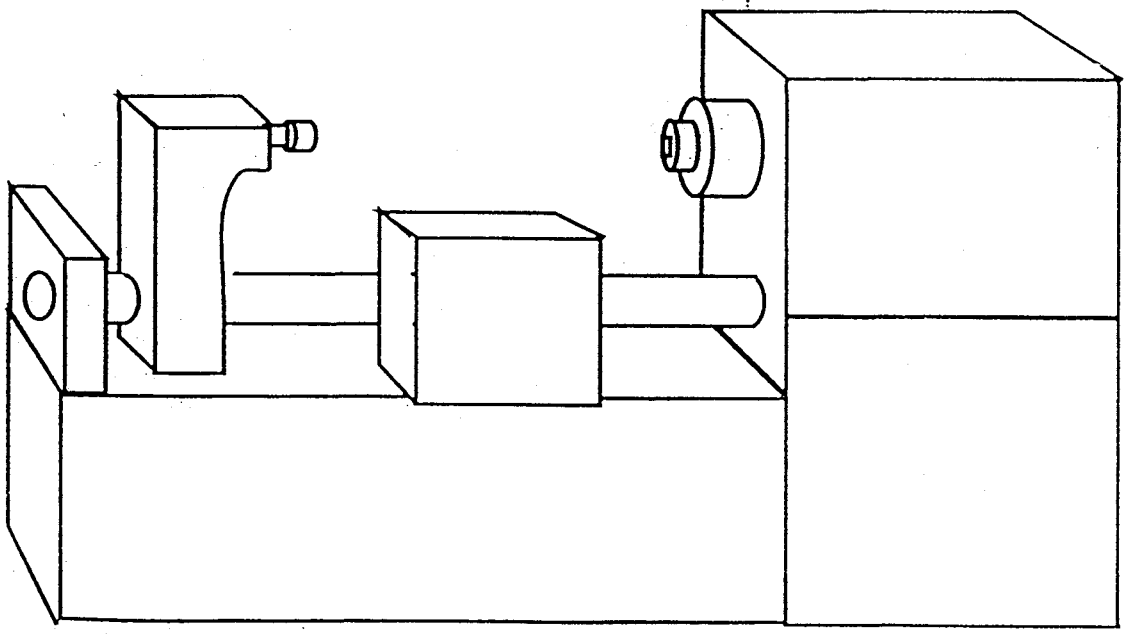

118

Drawing Showing Survey Points

PAGE 6 of 8

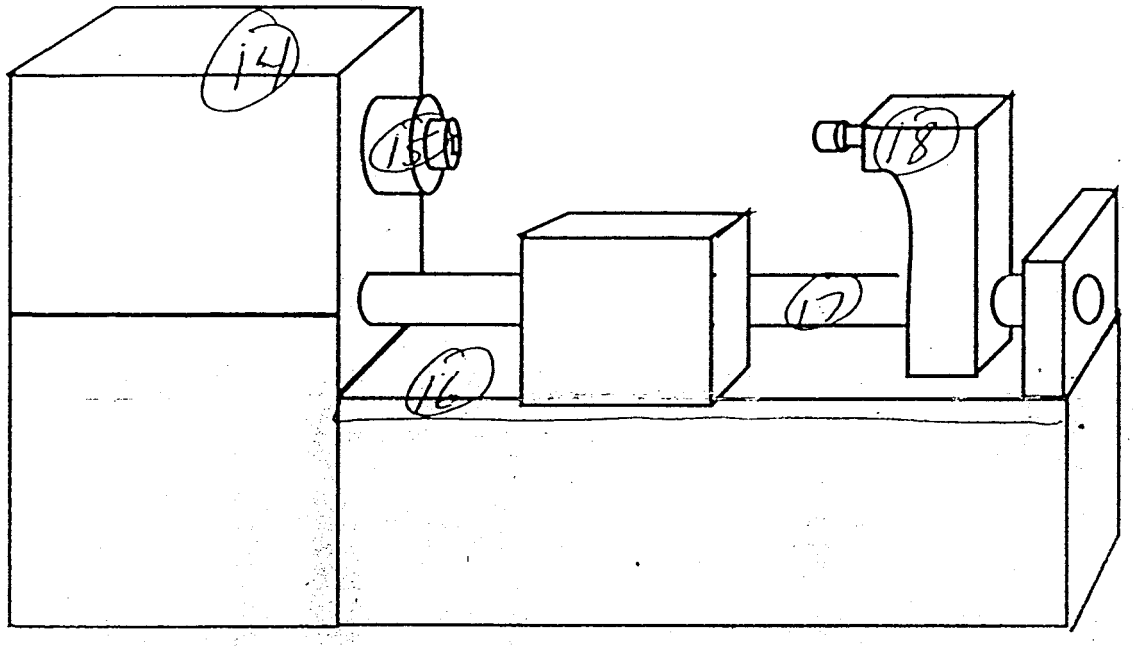

HARDINGE LATHE
PROPERTY CONTROL # 0038784RO

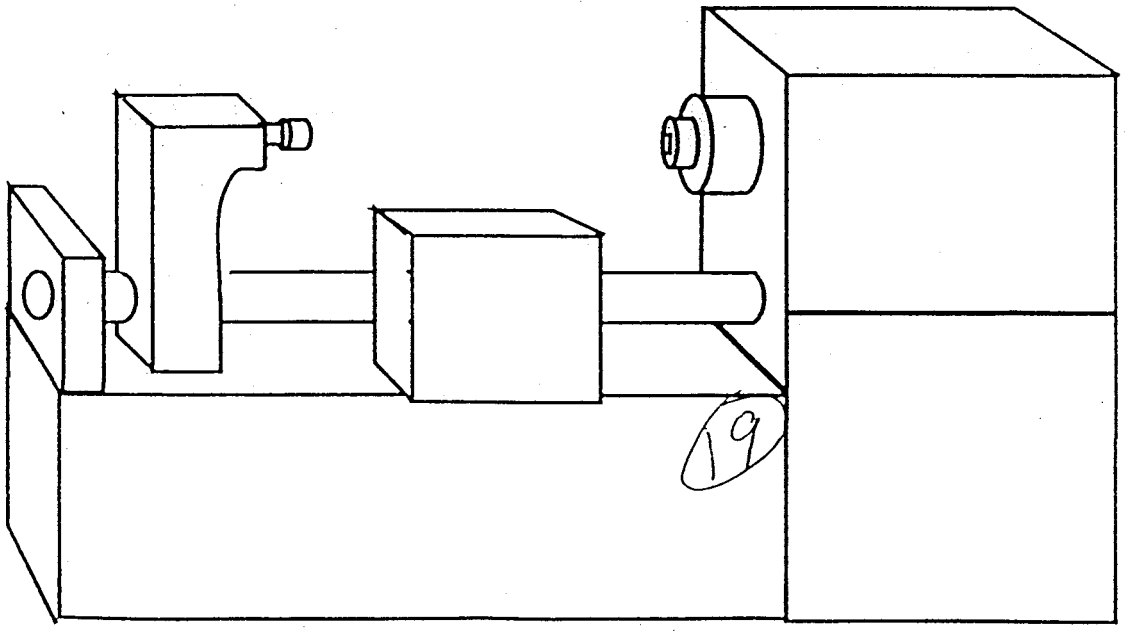

119

Drawing Showing Survey Points

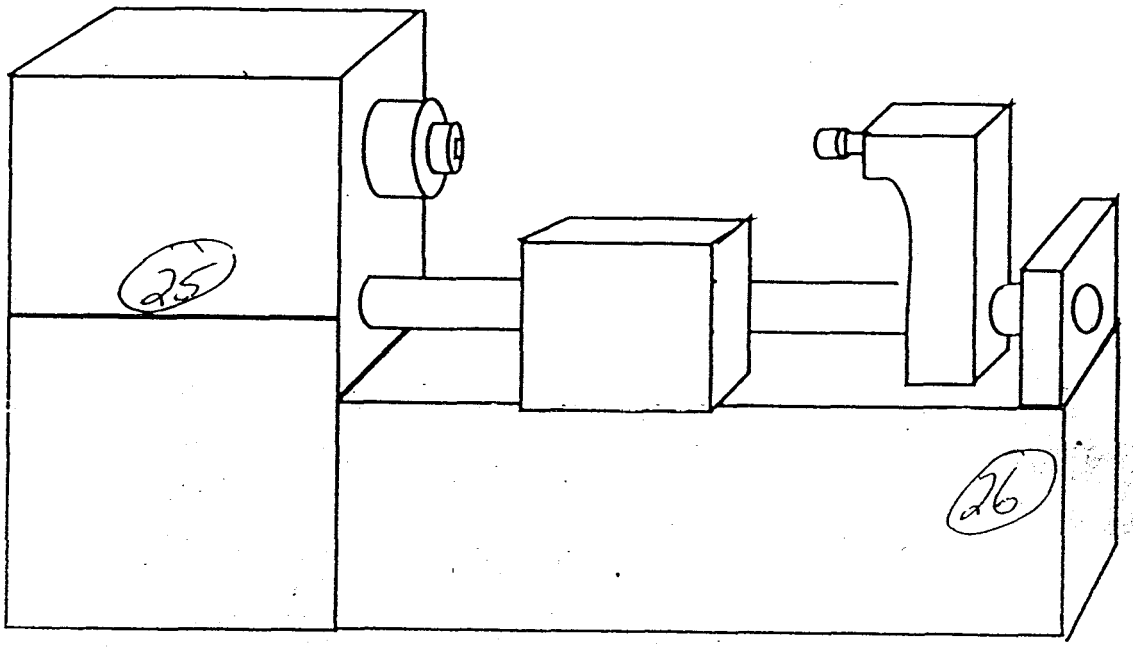

HEALD AXIMATIC LATHE
Property Control #00036017-00

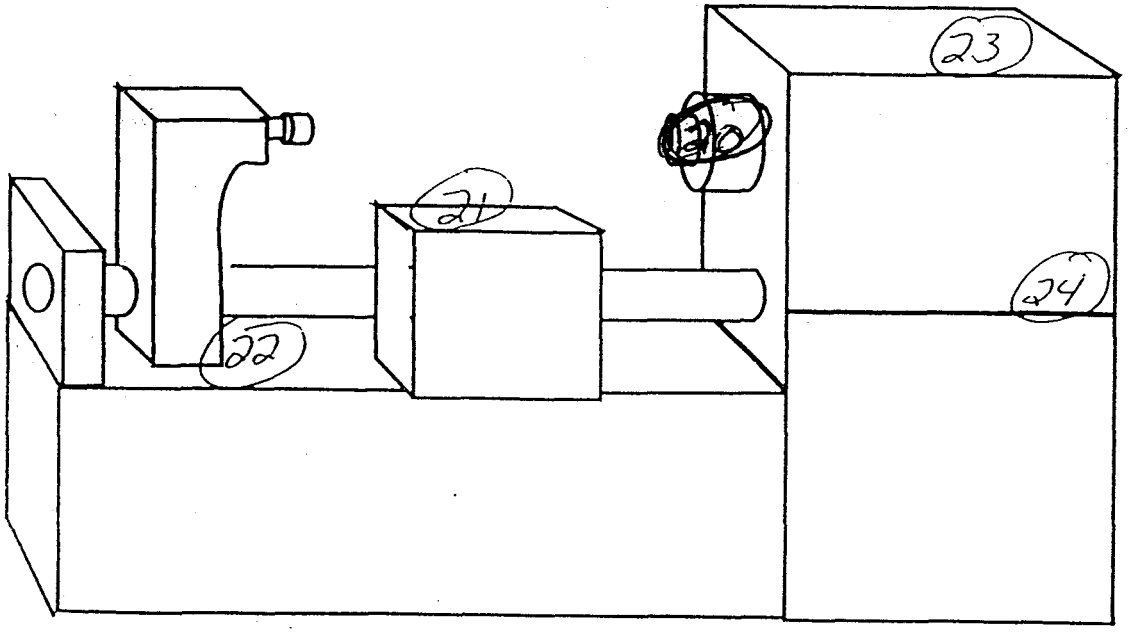

PAGE 8 of 18

Drawing Showing Survey Points

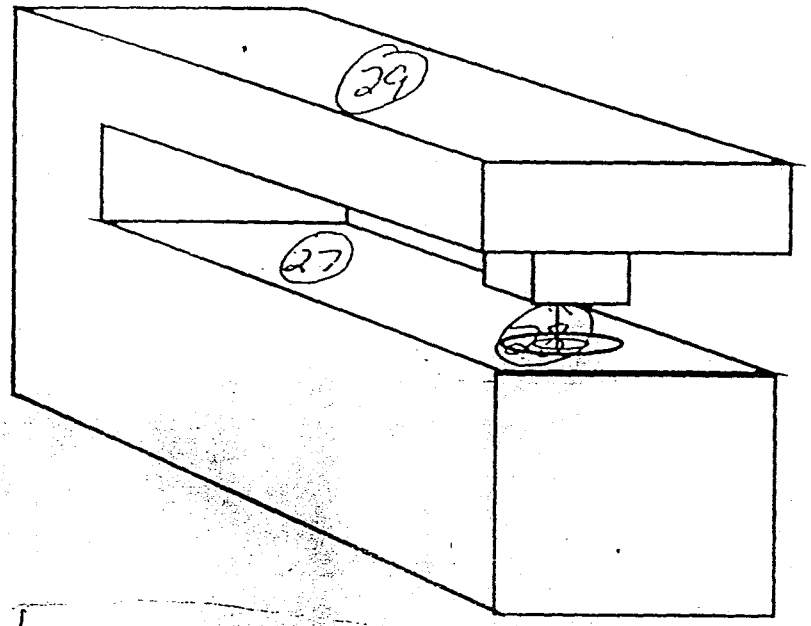

DO ALL BAND SAW
PROFICIENCY CERTIFICATE # 00034874-00

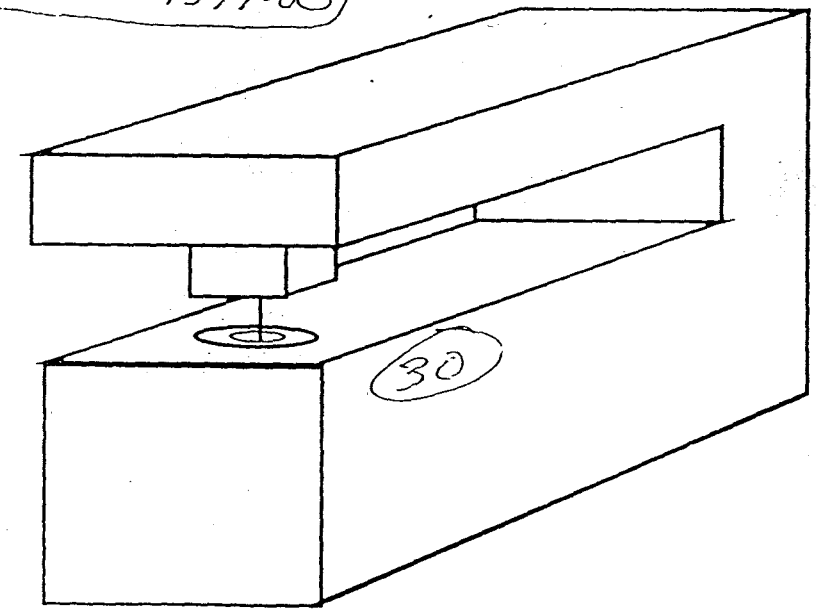

121

Drawing Showing Survey Points

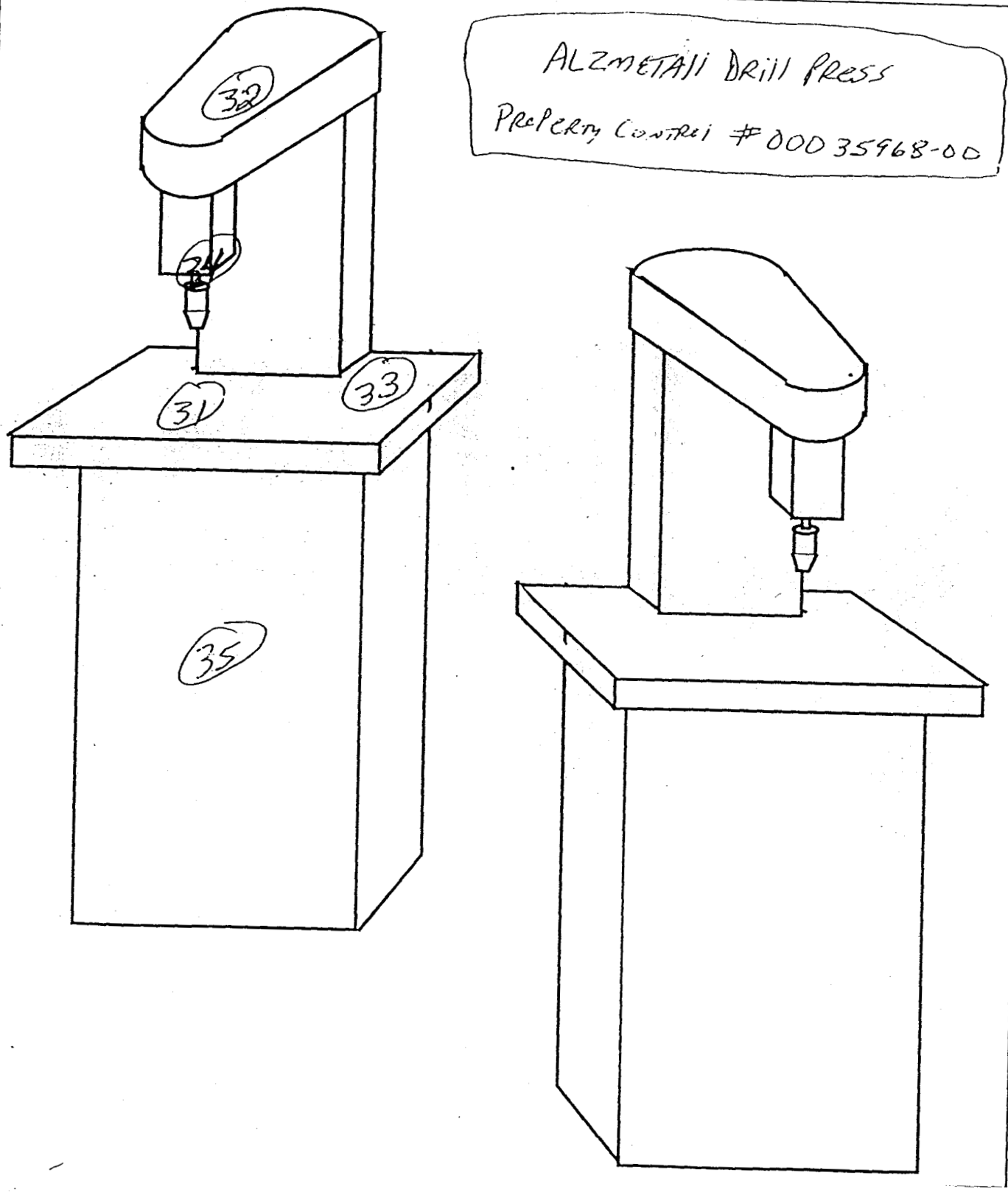

Drawing Showing Survey Points

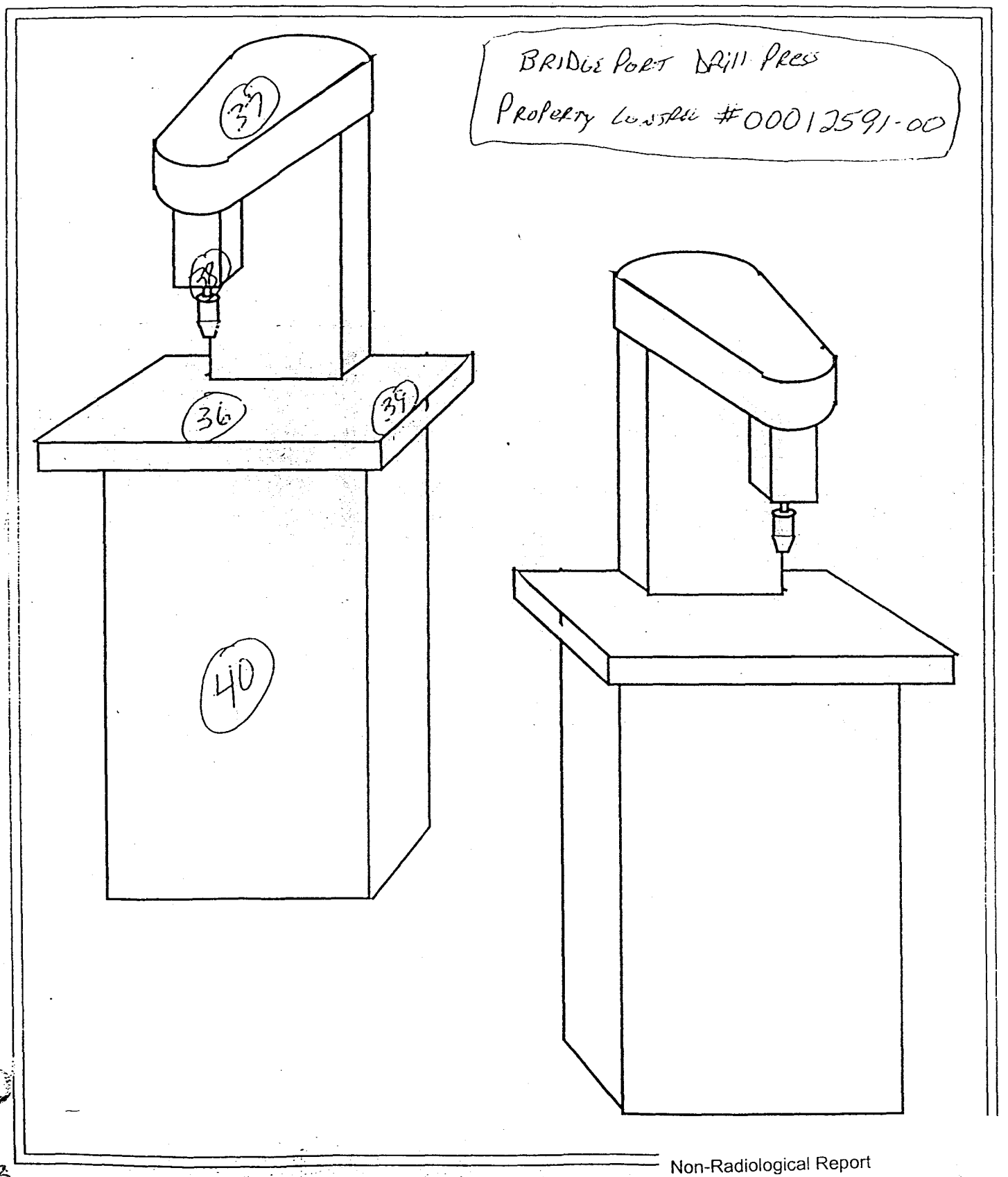

Drawing Showing Survey Points

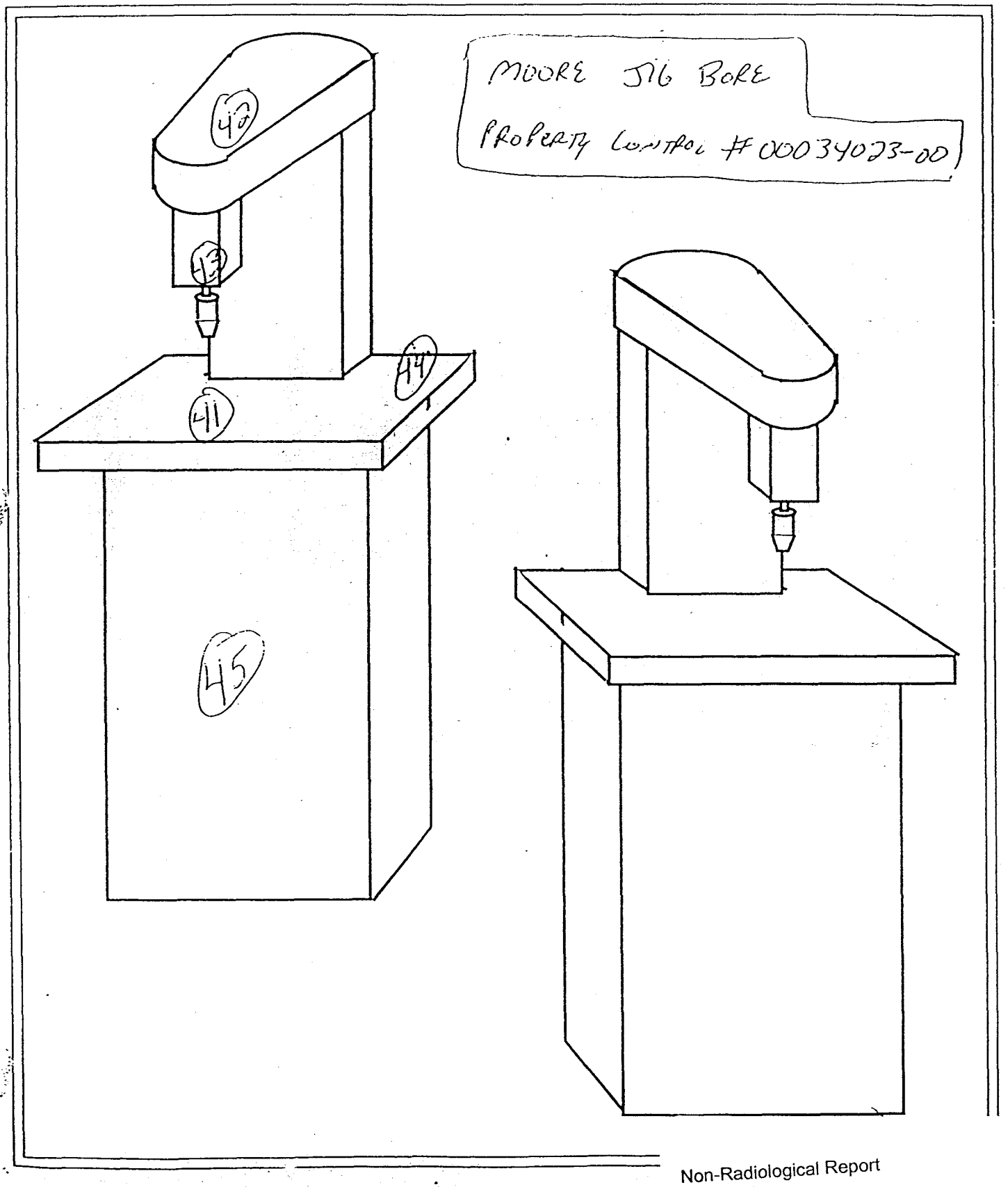

AREA MAP

Drawing Showing Survey Points

KOLEE CO SURFACE GRINDER

PROPERTY CONTROL # 00036191-00

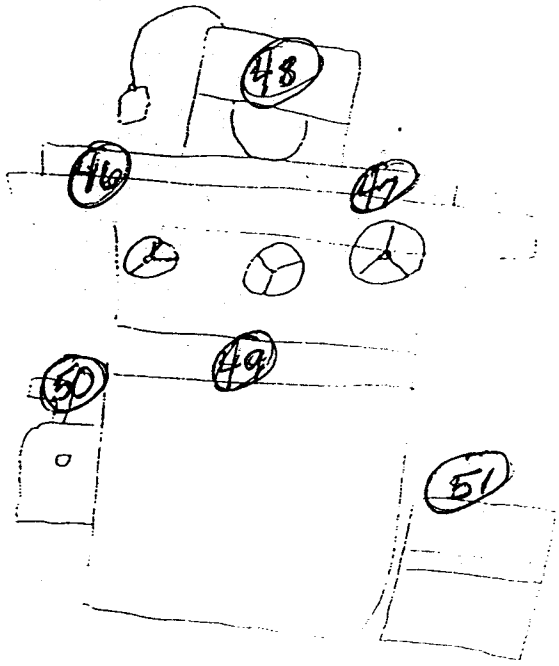

INORGANIC ANALYSES DATA SHEET (SUMMARY)

Element: Beryllium
CAS No.: 7440-41-7
Matrix: FILTER

Conc. Units: UG/F
RIN #: 98D1698

Laboratory ID:	Client Sample ID:	Conc.	Flag
33634.01	162-1	0.41	
33634.02	162-2	3.4	
33634.03	162-3	2	
33634.04	162-4	0.27	
33634.05	162-5	1.8	
33634.06	162-6	2.2	
33634.07	162-7	0.09	U
33634.08	162-8	0.3	
33634.09	162-9	0.56	
33634.10	162-10	0.22	
33634.11	162-11	0.09	U
33634.12	162-12	0.09	U
33634.13	162-13	0.09	U
33634.14	162-14	0.09	U
33634.15	162-15	0.09	U
33634.16	162-16	0.09	U
33634.17	162-17	0.09	U
33634.18	162-18	0.09	U
33634.19	162-19	0.09	U
33634.20	162-20	0.09	U
33634.21	162-21	2.7	
33634.22	162-22	0.09	U
33634.23	162-23	0.12	
33634.24	162-24	0.09	U
33634.25	162-25	0.12	
33634.26	162-26	0.13	
33634.27	162-27	0.09	U
33634.28	162-28	0.09	U
33634.29	162-29	0.09	U
33634.30	162-30	0.09	U
33634.31	162-31	0.12	
33634.32	162-32	0.09	U
33634.33	162-33	0.09	U
33634.34	162-34	0.09	U
33634.35	162-35	0.09	U
33634.36	162-36	0.09	U
33634.37	162-37	0.09	U
33634.38	162-38	0.09	U
33634.39	162-39	0.09	U
33634.40	162-40	0.09	U
33634.41	162-41	0.09	U
33634.42	162-42	0.09	U

Southwest Laboratory of Oklahoma, 1700 W Albany, Broken Arrow, OK

126

33634.43	162-43	0.09	U
33634.44	162-44	0.09	U
33634.45	162-45	0.09	U
33634.46	162-46	0.09	U
33634.47	162-47	0.09	U
33634.48	162-48	0.09	U
33634.49	162-49	0.09	U
33634.50	162-50	0.09	U
33634.51	162-51	0.09	U

Building 779, Room 162, Beryllium Surface Control Levels

February 26, 1999

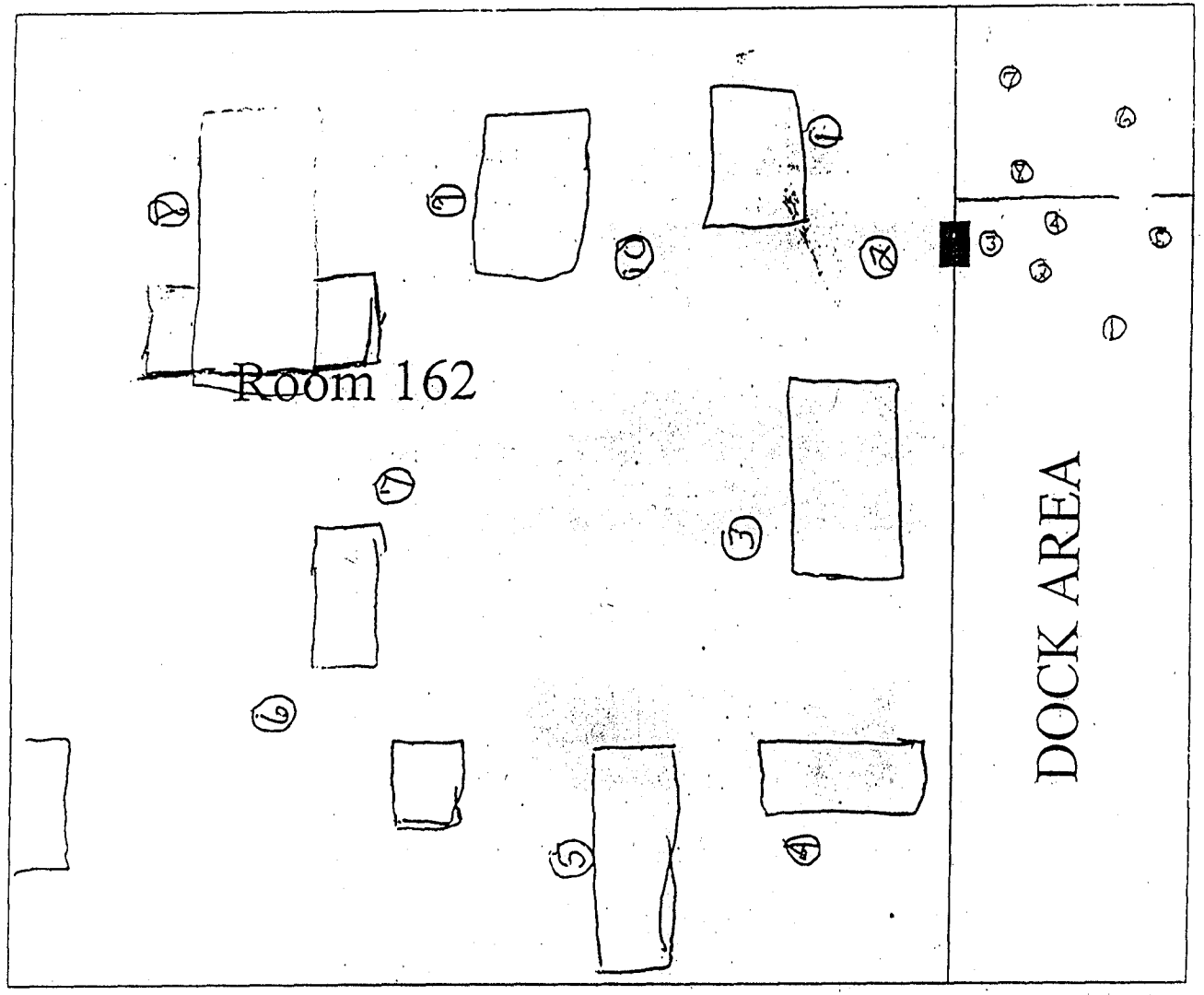

N

128

BUILDING 779

BERYLLIUM SMEAR RESULTS

ROOM 162

March 19, 1999

Sample Number	Reporting Limit micro grams	Location Totals[1] micro grams/100cm²
779-99-03-13-13-162-01	0.1ug	Floor <0.1ug/100cm²
779-99-03-13-13-162-02	0.1ug	Floor <0.1ug/100cm²
779-99-03-13-13-162-03	0.1ug	Floor <0.1ug/100cm²
779-99-03-13-13-162-04	0.1ug	Floor <0.1ug/100cm²
779-99-03-13-13-162-05	0.1ug	Floor <0.1ug/100cm²
779-99-03-13-13-162-06	0.1ug	Floor <0.1ug/100cm²
779-99-03-13-13-162-07	0.1ug	Floor <0.1ug/100cm²
779-99-03-13-13-162-08	0.1ug	Floor 0.2ug/100cm²
779-99-03-13-13-162-09	0.1ug	Floor <0.1ug/100cm²
779-99-03-13-13-162-10	0.1ug	Floor <0.1ug/100cm²
779-99-03-13-13-162-MON-01	0.1ug	Monach Lathe <0.1ug/100cm²
779-99-03-13-13-162-MON-02	0.1ug	Monarch Lathe 0.5ug/100cm²
779-99-03-13-13-162-SOU-03	0.1ug	Southbend 1307 Lathe <0.1ug/100cm²
779-99-03-13-13-162-SOU-04	0.1ug	Southbend 1307 Lathe <0.1ug/100cm²
779-99-03-13-13-162-HAR-05	0.1ug	Harding Lathe <0.1ug/100cm²
779-99-03-13-13-162-HAR-06	0.1ug	Harding Lathe <0.1ug/100cm²
779-99-03-13-13-162-HEA-07	0.1ug	Heald Alzmatic Lathe <0.1ug/100cm²
779-99-03-13-13-162-HEA-08	0.1ug	Heald Alzmatic Lathe 0.2ug/100cm²
779-99-03-13-13-162-DAB-09	0.1ug	Do All Bandsaw <0.1ug/100cm²
779-99-03-13-13-162-DAB-10	0.1ug	Do All Bandsaw <0.1ug/100cm²
779-99-03-13-13-162-ALZ-11	0.1ug	Alzmetall Drill Press <0.1ug/100cm²
779-99-03-13-13-162-ALZ-12	0.1ug	Alzmetall Drill Press <0.1ug/100cm²
779-99-03-13-13-162-BRI-13	0.1ug	Bridge Port Drill Press <0.1ug/100cm²
779-99-03-13-13-162-BRI-14	0.1ug	Bridge Port Drill Press <0.1ug/100cm²
779-99-03-17-13-201-MOO-15	0.1ug	Moore Jig Bore <0.1ug/100cm²
779-99-03-17-13-201-MOO-16	0.1ug	Moore Jig Bore <0.1ug/100cm²
779-99-03-17-13-201-KOL-17	0.1ug	Kolee Surface Grinder <0.1ug/100cm²
779-99-03-17-13-201-KOL-18	0.1ug	Kolee Surface Grinder <0.1ug/100cm²

[1] See attached map of room ~~201~~ 162 for approximate smear locations on floor.

EQUIPMENT - SELF Explanatory

3/20

Building 779, Room 162, Beryllium Surface Control Levels

February 26, 1999

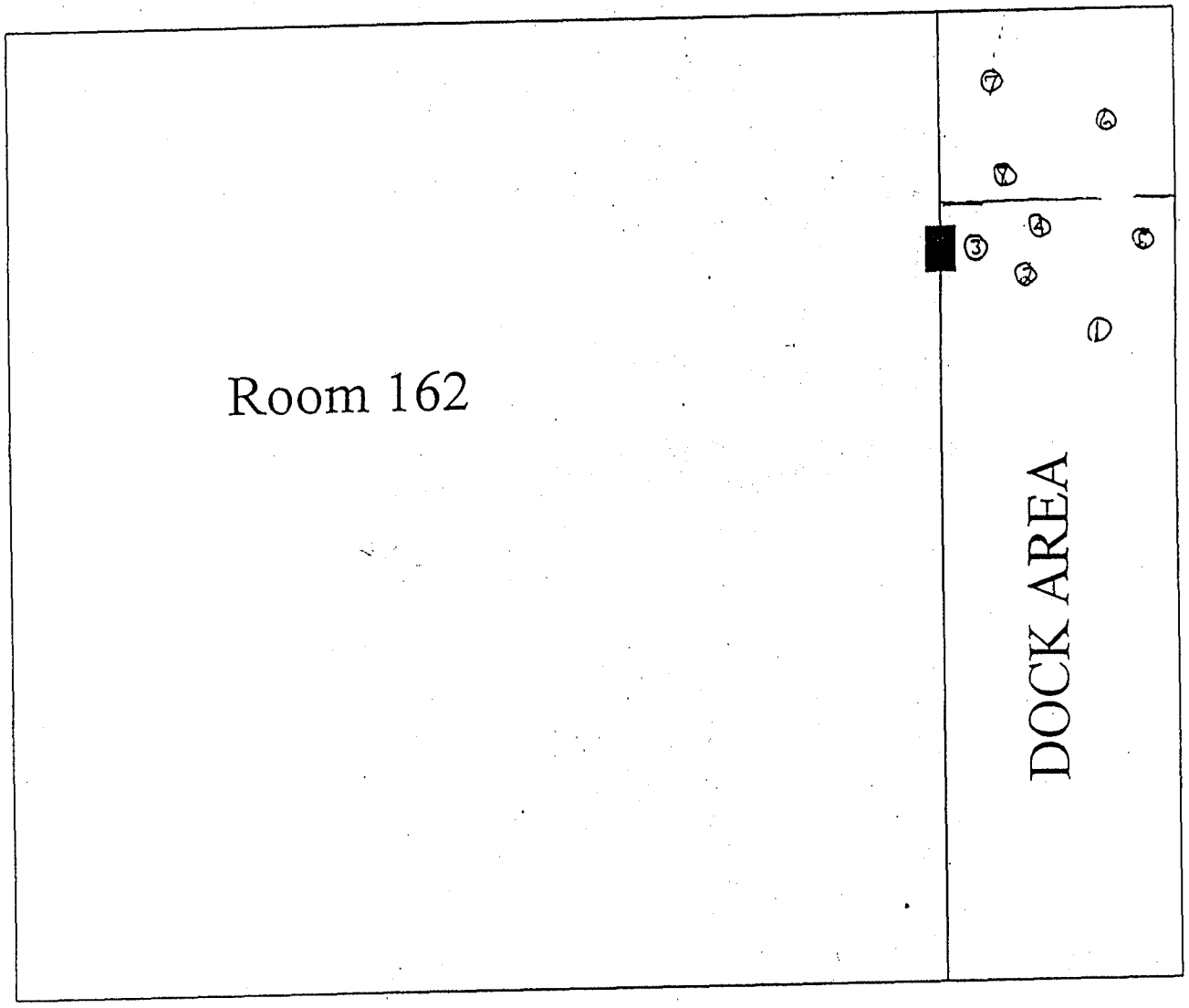

N

150

BUILDING 779

BERYLLIUM SMEAR RESULTS

ROOM 162 SOP AREA

March 20, 1999

Sample Number	Reporting Limit micro grams	Location Totals[1] micro grams/100cm^2
779-99-03-09-13-162-01	0.1 ug	Floor <0.1 ug/100cm^2
779-99-03-09-13-162-02	0.1 ug	Floor <0.1 ug/100cm^2
779-99-03-09-13-162-03	0.1 ug	Floor <0.1 ug/100cm^2
779-99-03-09-13-162-04	0.1 ug	Floor <0.1 ug/100cm^2
779-99-03-09-13-162-05	0.1 ug	Floor <0.1 ug/100cm^2
779-99-03-09-13-162-06	0.1 ug	Floor <0.1 ug/100cm^2
779-99-03-09-13-162-07	0.1 ug	Floor <0.1 ug/100cm^2
779-99-03-09-13-162-08	0.1 ug	Floor <0.1 ug/100cm^2

[1] See attached map of room 162 for approximate smear locations on floor.

Building 779, Room 162, Beryllium Surface Control Levels

46

February 26, 1999

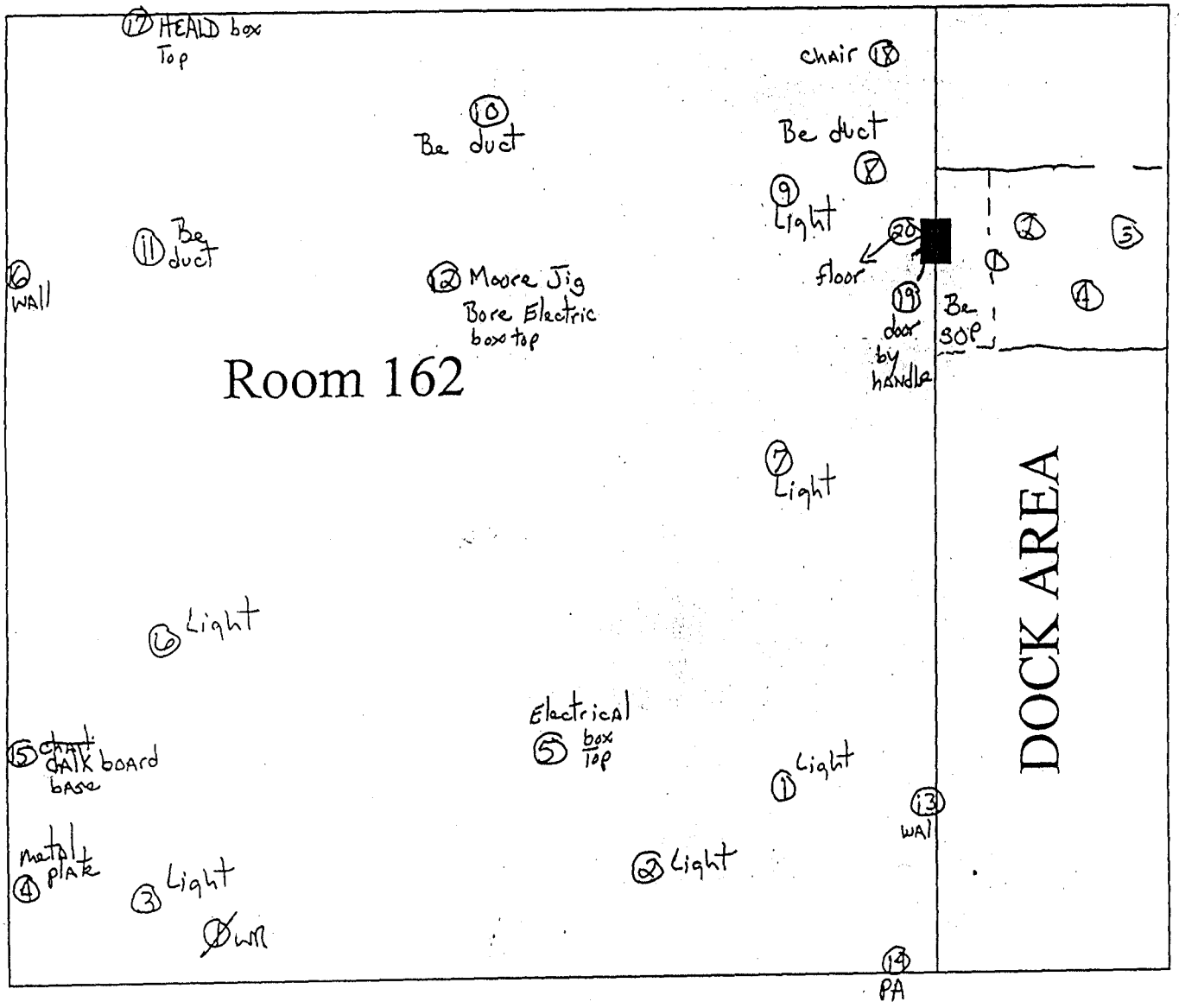

130

BUILDING 779

BERYLLIUM SMEAR RESULTS

ROOM 162

April 5, 1999

Sample Number	Reporting Limit micro grams	Location Totals micro grams/100cm^2
779-99-03-24-13-162-01	0.1$_{ug}$	(OH) Light <0.1$_{ug/100cm^2}$
779-99-03-24-13-162-02	0.1$_{ug}$	(OH) Light <0.1$_{ug/100cm^2}$
779-99-03-24-13-162-03	0.1$_{ug}$	(OH) Light <0.1$_{ug/100cm^2}$
779-99-03-24-13-162-04	0.1$_{ug}$	Metal Plate <0.1$_{ug/100cm^2}$
779-99-03-24-13-162-05	0.1$_{ug}$	(OH) Electrical Box <0.1$_{ug/100cm^2}$
779-99-03-24-13-162-06	0.1$_{ug}$	(OH) Light <0.1$_{ug/100cm^2}$
779-99-03-24-13-162-07	0.1$_{ug}$	(OH) Light <0.1$_{ug/100cm^2}$
779-99-03-24-13-162-08	0.1$_{ug}$	(OH) Be Duct <0.1$_{ug/100cm^2}$
779-99-03-24-13-162-09	0.1$_{ug}$	(OH) Light <0.1$_{ug/100cm^2}$
779-99-03-24-13-162-10	0.1$_{ug}$	(OH) Be Duct <0.1$_{ug/100cm^2}$
779-99-03-24-13-162-11	0.1$_{ug}$	(OH) Be Duct <0.1$_{ug/100cm^2}$
779-99-03-24-13-162-12	0.1$_{ug}$	(OH) Moore Jig Bore Electric Box <0.1$_{ug/100cm^2}$
779-99-03-24-13-162-13	0.1$_{ug}$	Wall <0.1$_{ug/100cm^2}$
779-99-03-24-13-162-14	0.1$_{ug}$	PA Horn <0.1$_{ug/100cm^2}$
779-99-03-24-13-162-15	0.1$_{ug}$	Chalkboard Base <0.1$_{ug/100cm^2}$
779-99-03-24-13-162-16	0.1$_{ug}$	Wall <0.1$_{ug/100cm^2}$
779-99-03-24-13-162-17	0.1$_{ug}$	Heald Box <0.1$_{ug/100cm^2}$
779-99-03-24-13-162-18	0.1$_{ug}$	Chair <0.1$_{ug/100cm^2}$
779-99-03-24-13-162-19	0.1$_{ug}$	Door Handle<0.1$_{ug/100cm^2}$
779-99-03-24-13-162-20	0.1$_{ug}$	Floor <0.1$_{ug/100cm^2}$
779-99-03-24-13-162-21	0.1$_{ug}$	Respirator Mask <0.1$_{ug/100cm^2}$
779-99-03-24-13-162-22	0.1$_{ug}$	Respirator Mask <0.1$_{ug/100cm^2}$
779-99-03-24-13-162-23	0.1$_{ug}$	Respirator Mask <0.1$_{ug/100cm^2}$
779-99-03-24-13-162-24	0.1$_{ug}$	Respirator Mask <0.1$_{ug/100cm^2}$
779-99-03-24-13-162-SOP-01	0.1$_{ug}$	Floor <0.1$_{ug/100cm^2}$
779-99-03-24-13-162-SOP-02	0.1$_{ug}$	Floor <0.1$_{ug/100cm^2}$
779-99-03-24-13-162-SOP-03	0.1$_{ug}$	Floor <0.1$_{ug/100cm^2}$
779-99-03-24-13-162-SOP-04	0.1$_{ug}$	Floor <0.1$_{ug/100cm^2}$

[1] See attached map of room 162 for approximate smear locations. Respirators not shown on map.

133

Building 779, Room 162, Beryllium Surface Control Levels

February 26, 1999

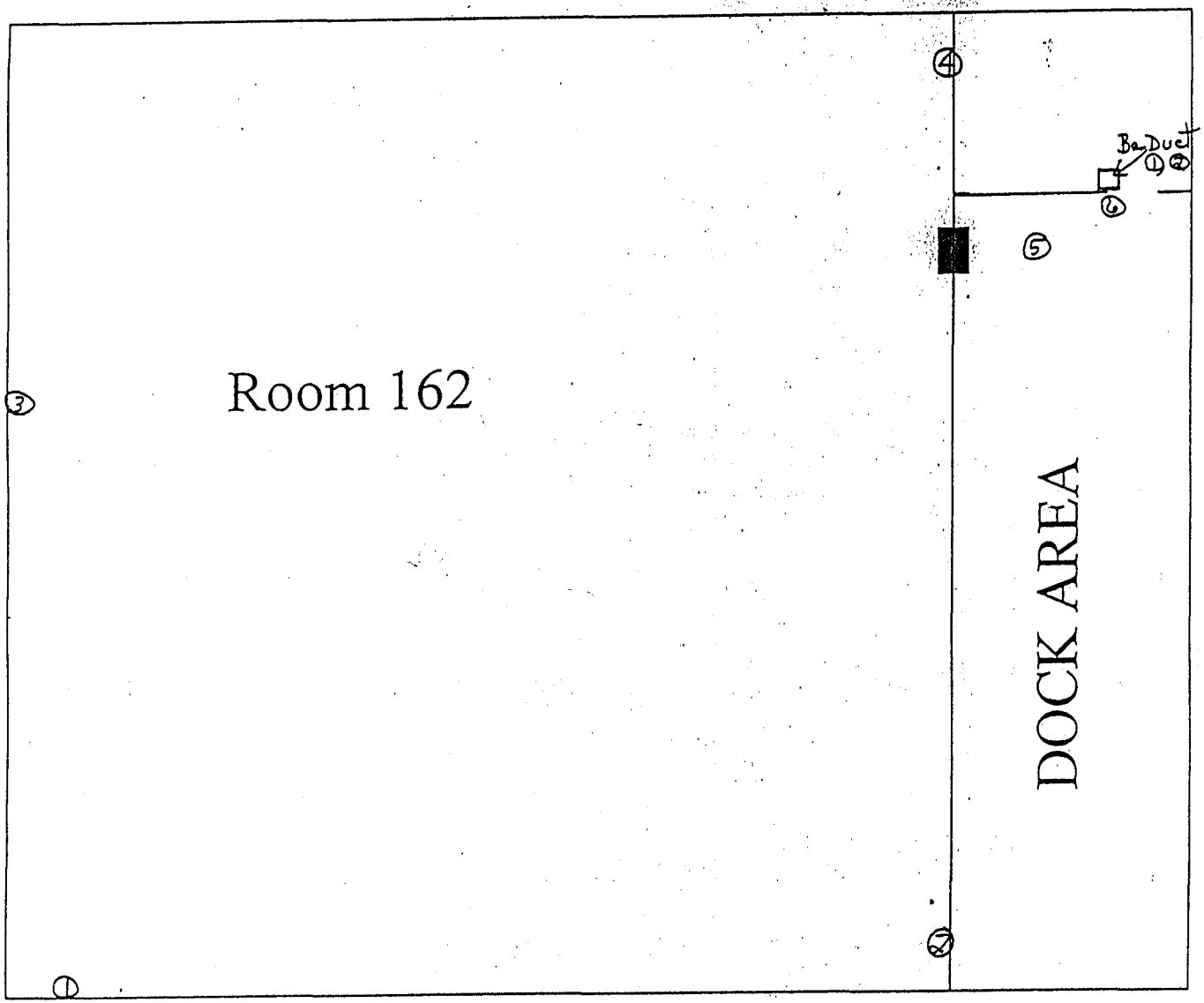

BUILDING 779

BERYLLIUM SMEAR RESULTS

ROOM 162

APRIL 7, 1999

Sample Number	Reporting Limit micro grams	Location Totals micro grams/100cm²
779-99-03-20-13-162-01	0.1 ug	(SW) Exhaust Vent <0.1 ug/100cm²
779-99-03-20-13-162-02	0.1 ug	(SE) Exhaust Vent <0.1 ug/100cm²
779-99-03-20-13-162-03	0.1 ug	(NW) Exhaust Vent <0.1 ug/100cm²
779-99-03-20-13-162-04	0.1 ug	(NE) Exhaust Vent <0.1 ug/100cm²
779-99-03-20-13-162-05	0.1 ug	SOP Area <0.1 ug/100cm²
779-99-03-20-13-162-06	0.1 ug	SOP Area <0.1 ug/100cm²
779-99-03-20-13- duct -01	0.1 ug	Duct Internal <0.1 ug/100cm²
779-99-03-20-13- duct -02	0.1 ug	Duct Internal <0.1 ug/100cm²

[1] See attached map of room 162 for approximate smear locations in room. Included is the SOP area and Be duct.

Building 779, Room 162, Beryllium Surface Control Levels

February 26, 1999

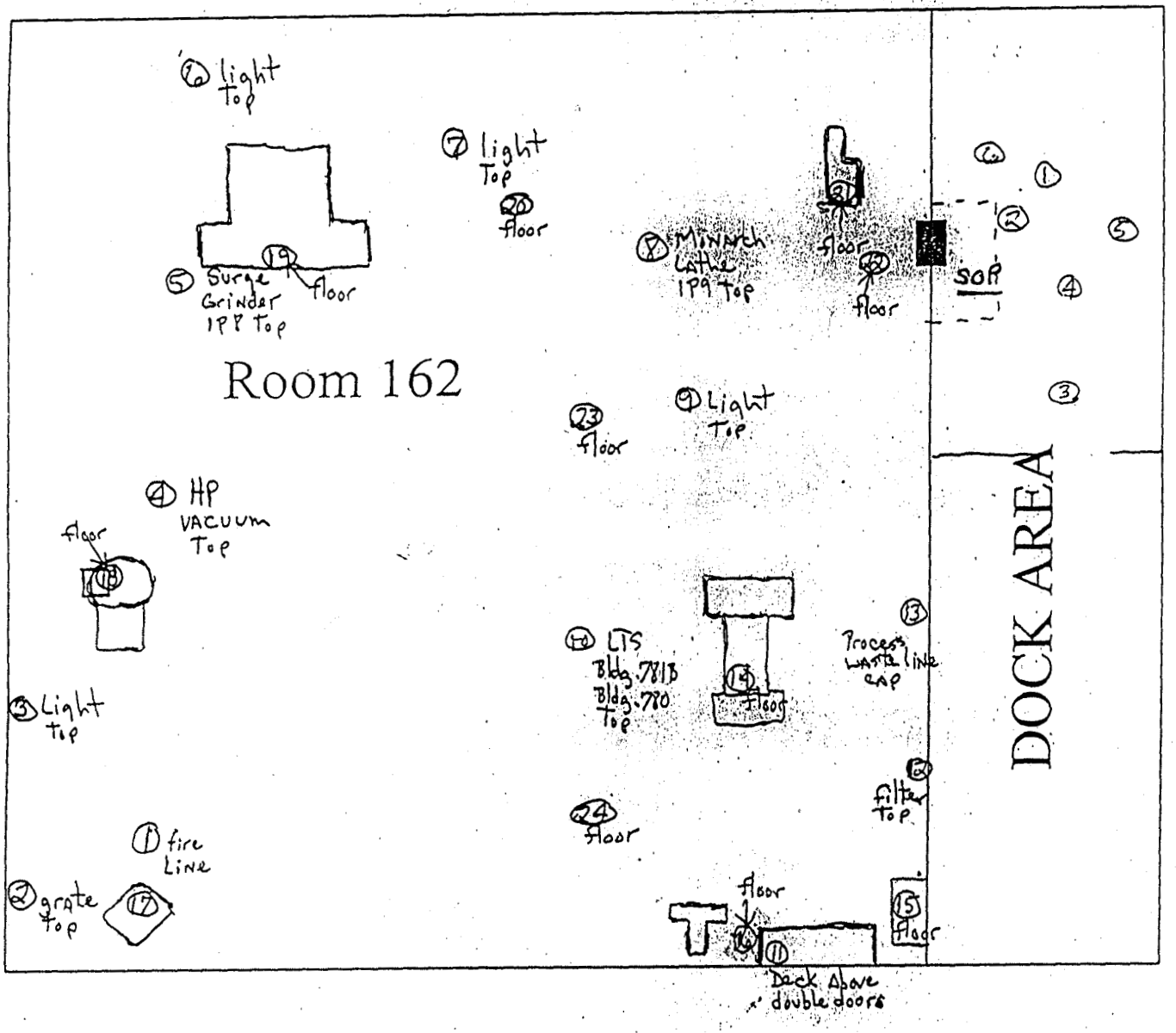

136

BUILDING 779

BERYLLIUM SMEAR RESULTS

ROOM 162

April 13, 1999

Sample Number	Reporting Limit micro grams	Location Totals[1] micro grams/100cm^2
779-99-04-05-13-162-01	0.1$_{ug}$	(OH) Fire Line <0.1$_{ug/100cm^2}$
779-99-04-05-13-162-02	0.1$_{ug}$	(OH) Grate <0.1$_{ug/100cm^2}$
779-99-04-05-13-162-03	0.1$_{ug}$	(OH) Light <0.1$_{ug/100cm^2}$
779-99-04-05-13-162-04	0.1$_{ug}$	(OH) HP Vacuum <0.1$_{ug/100cm^2}$
779-99-04-05-13-162-05	0.1$_{ug}$	(OH) Surge Grinder 1P8 <0.1$_{ug/100cm^2}$
779-99-04-05-13-162-06	0.1$_{ug}$	(OH) Light <0.1$_{ug/100cm^2}$
779-99-04-05-13-162-07	0.1$_{ug}$	(OH) Light <0.1$_{ug/100cm^2}$
779-99-04-05-13-162-08	0.1$_{ug}$	(OH) Monarch Lathe 1P9 0.1$_{ug/100cm^2}$
779-99-04-05-13-162-09	0.1$_{ug}$	(OH) Light <0.1$_{ug/100cm^2}$
779-99-04-05-13-162-10	0.1$_{ug}$	(OH) LTS Bldg. 781/780 <0.1$_{ug/100cm^2}$
779-99-04-05-13-162-11	0.1$_{ug}$	(OH) Deck Above Double Doors <0.1$_{ug/100cm^2}$
779-99-04-05-13-162-12	0.1$_{ug}$	(OH) Filter <0.1$_{ug/100cm^2}$
779-99-04-05-13-162-13	0.1$_{ug}$	Process Waste Line Cap <0.1$_{ug/100cm^2}$
779-99-04-05-13-162-14	0.1$_{ug}$	Floor <0.1$_{ug/100cm^2}$
779-99-04-05-13-162-15	0.1$_{ug}$	Floor <0.1$_{ug/100cm^2}$
779-99-04-05-13-162-16	0.1$_{ug}$	Floor 0.1$_{ug/100cm^2}$
779-99-04-05-13-162-17	0.1$_{ug}$	Floor <0.1$_{ug/100cm^2}$
779-99-04-05-13-162-18	0.1$_{ug}$	Floor 0.1$_{ug/100cm^2}$
779-99-04-05-13-162-19	0.1$_{ug}$	Floor <0.1$_{ug/100cm^2}$
779-99-04-05-13-162-20	0.1$_{ug}$	Floor 0.2$_{ug/100cm^2}$
779-99-04-05-13-162-21	0.1$_{ug}$	Floor 0.1$_{ug/100cm^2}$
779-99-04-05-13-162-22	0.1$_{ug}$	Floor <0.1$_{ug/100cm^2}$
779-99-04-05-13-162-23	0.1$_{ug}$	Floor <0.1$_{ug/100cm^2}$
779-99-04-05-13-162-24	0.1$_{ug}$	Floor <0.1$_{ug/100cm^2}$
779-99-04-05-13-162-SOP-01	0.1$_{ug}$	Floor <0.1$_{ug/100cm^2}$
779-99-04-05-13-162-SOP-02	0.1$_{ug}$	Floor <0.1$_{ug/100cm^2}$
779-99-04-05-13-162-SOP-03	0.1$_{ug}$	Floor <0.1$_{ug/100cm^2}$
779-99-04-05-13-162-SOP-04	0.1$_{ug}$	Floor <0.1$_{ug/100cm^2}$
779-99-04-05-13-162-SOP-05	0.1$_{ug}$	Floor <0.1$_{ug/100cm^2}$
779-99-04-05-13-162-SOP-06	0.1$_{ug}$	Floor <0.1$_{ug/100cm^2}$

[1] See attached map of room 162 for approximate smear locations. Sample point 20 will be deconed , will resample at a later date.

157

Building 779, Room 162, Beryllium Surface Control Levels

February 26, 1999

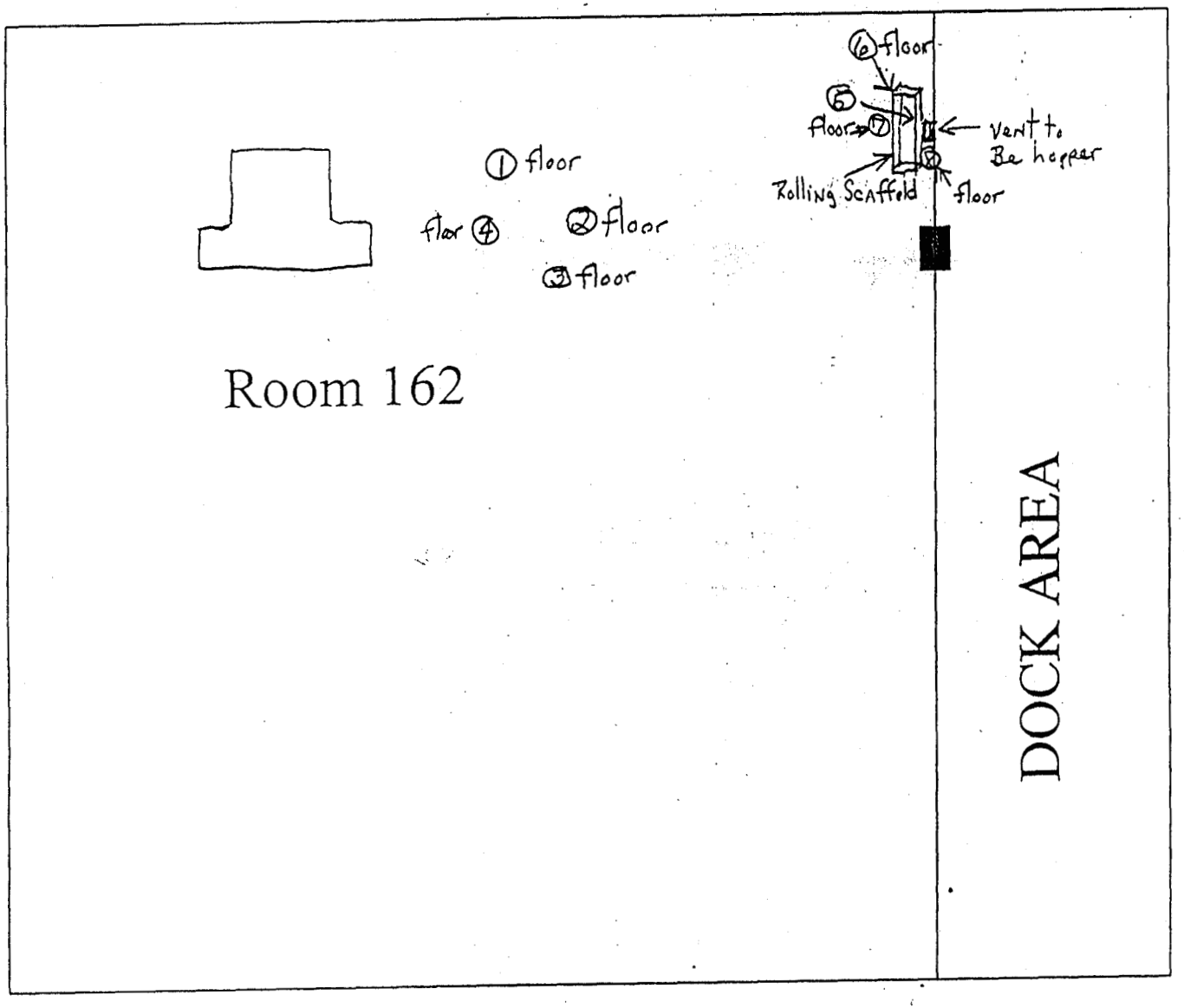

138

BUILDING 779

BERYLLIUM SMEAR RESULTS

ROOM 162

April 16, 1999

Sample Number	Reporting Limit micro grams	Location Totals[1] micro grams/100cm^2
779-99-04-12-13-162-01	0.1$_{ug}$	Floor <0.1$_{ug/100cm}^2$
779-99-04-12-13-162-02	0.1$_{ug}$	Floor <0.1$_{ug/100cm}^2$
779-99-04-12-13-162-03	0.1$_{ug}$	Floor <0.1$_{ug/100cm}^2$
779-99-04-12-13-162-04	0.1$_{ug}$	Floor <0.1$_{ug/100cm}^2$
779-99-04-12-13-162-05	0.1$_{ug}$	Floor <0.1$_{ug/100cm}^2$
779-99-04-12-13-162-06	0.1$_{ug}$	Floor <0.1$_{ug/100cm}^2$
779-99-04-12-13-162-07	0.1$_{ug}$	Floor <0.1$_{ug/100cm}^2$
779-99-04-12-13-162-08	0.1$_{ug}$	Floor <0.1$_{ug/100cm}^2$

[1] See attached map of room 162 for approximate smear locations on floor. This is the final survey for Beryllium contamination. Out of 84 smears taken for Be only 4 samples were 0.2$_{ug/100cm}^2$ or higher.

139

	A	B	C	D	E	F	G
1	***Room Number***	***Date***	***Sample Number***	***Reporting Limit*** *micro grams/100cm2*	***Location/Description***	***Smear Results*** *micro grams/100cm2*	***Sample Method or RIN#***
774	Dock	8/6/99	779-07231999-13-501	0.1	Be Hopper Exhaust Internal	<0.1 q/100cm^2	*
775	Dock	8/6/99	779-07261999-13-501	0.1	Be Hopper Exhaust Internal	<0.1 q/100cm^2	*
776	Dock	8/6/99	779-07271999-13-501	0.1	Be Hopper - Floor	<0.1 q/100cm^2	*
777	Dock	8/6/99	779-07271999-13-502	0.1	Be Hopper - Floor	<0.1 q/100cm^2	*
778	Dock	8/6/99	779-07271999-13-503	0.1	Be Hopper - Floor	<0.1 q/100cm^2	*
779	Dock	8/6/99	779-07271999-13-504	0.1	Be Hopper - Floor	<0.1 q/100cm^2	*
780	Dock	8/6/99	779-07281999-13-501	0.1	Be Hopper - Floor	<0.1 q/100cm^2	*
781	Dock	8/6/99	779-07281999-13-502	0.1	Be Hopper - Floor	<0.1 q/100cm^2	*
782	Dock	8/6/99	779-07281999-13-503	0.1	Be Hopper - Floor	<0.1 q/100cm^2	*
783	Dock	8/6/99	779-07281999-13-504	0.1	Be Hopper - Floor	<0.1 q/100cm^2	*
784	Dock	8/6/99	779-07281999-13-505	0.1	Be Hopper - Floor	<0.1 q/100cm^2	*
785	Dock	8/6/99	779-07281999-13-506	0.1	Be Hopper - Floor	<0.1 q/100cm^2	*
786	Dock	8/6/99	779-07281999-13-507	0.1	Be Hopper - Floor	<0.1 q/100cm^2	*
787	Dock	8/6/99	779-07281999-13-508	0.1	Be Hopper - Floor	<0.1 q/100cm^2	*
788	Dock	8/6/99	779-07311999-13-502	0.1	Be Hopper - Floor	<0.1 q/100cm^2	*
789	Dock	8/6/99	779-07311999-13-503	0.1	Be Hopper - Floor	<0.1 q/100cm^2	*
790	Dock	8/6/99	779-07311999-13-504	0.1	Be Hopper - Floor	<0.1 q/100cm^2	*
	Dock	8/6/99	779-07311999-13-505	0.1	Be Hopper - Floor	<0.1 q/100cm^2	*
	Dock	8/6/99	779-07311999-13-506	0.1	Be Hopper - Floor	<0.1 q/100cm^2	*
	Dock	8/6/99	779-07311999-13-507	0.1	Be Hopper - Floor	<0.1 q/100cm^2	*
	Dock	8/9/99	779-07151999-13-503	0.1	Be Hopper Exhaust Internal At Second Elbow	<0.1 q/100cm^2	*
	Dock	8/9/99	779-07151999-13-504	0.1	Be Hopper Exhaust Internal At First Elbow	<0.1 q/100cm^2	*

* Analysis for Be using NIOSH method 7300 elements by IGP

BUILDING 779

BERYLLIUM SMEAR RESULTS

ROOF OF COVERED DOCK

August 6, 1999

Sample Number	Reporting Limit micro grams	Location Totals[1] micro grams/100cm^2
779-07231999-13-501	$0.1_{\mu g}$	Be Hopper Exhaust Internal $<0.1_{\mu g/100cm^2}$

[1] See attached map of Be exhaust for approximate smear locations. Smears taken in exhaust running above the covered dock. Smear taken while full negative on.

Building 779

Beryllium Smear Locations

Beryllium Exhaust Line

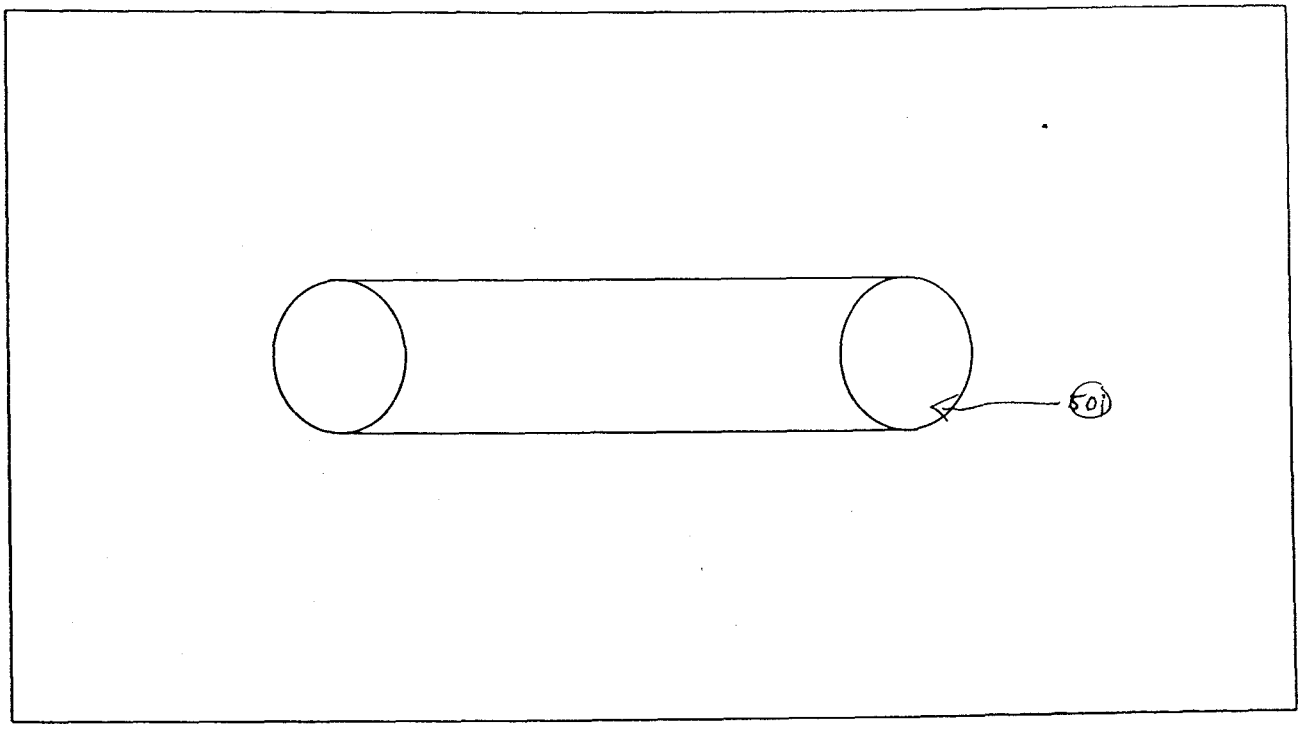

BUILDING 779

BERYLLIUM SMEAR RESULTS

ROOF OF COVERED DOCK

August 6, 1999

Sample Number	Reporting Limit micro grams	Location Totals[1] micro grams/100cm^2
779-07261999-13-501	0.1_{ug}	Be Hopper Exhaust Internal $<0.1_{ug/100cm^2}$

[1] See attached map of Be exhaust for approximate smear locations. Smears taken in exhaust running above the covered dock. Smear taken while full negative on.

143

Building 779

Beryllium Smear Locations

Beryllium Exhaust Line

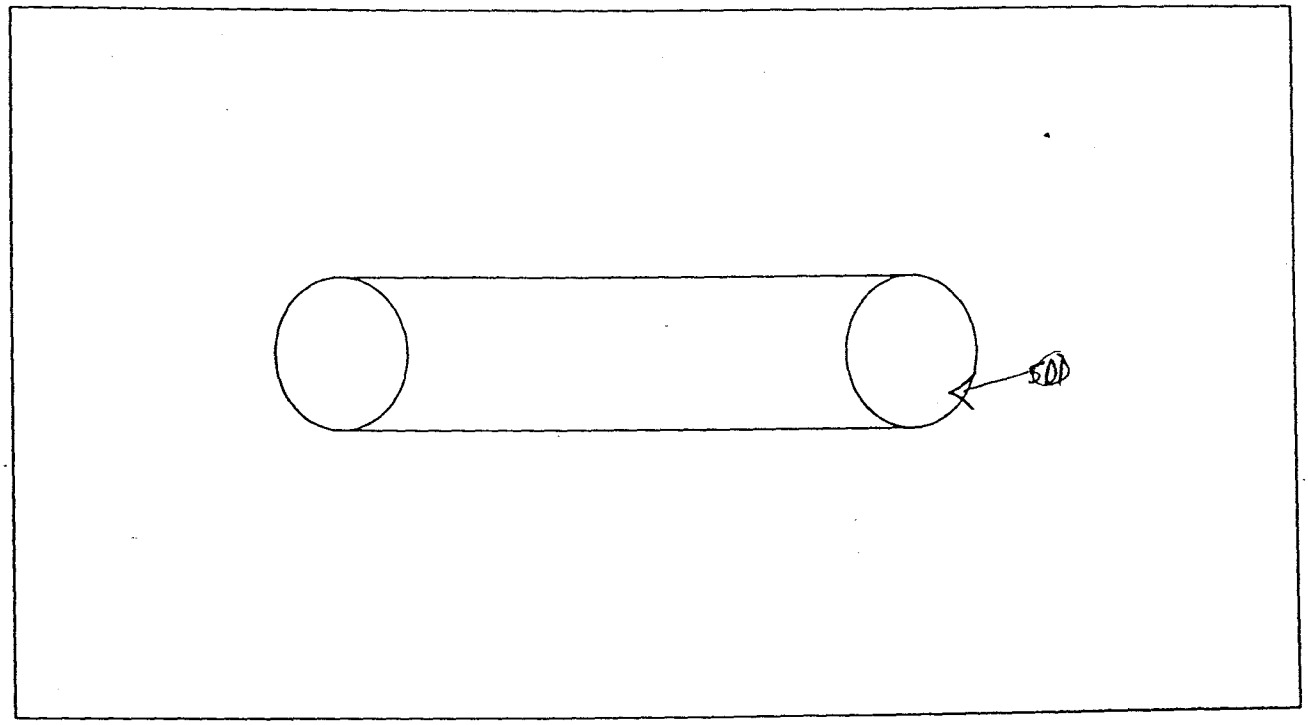

144

BUILDING 779

BERYLLIUM SMEAR RESULTS

Be HOPPER COVERED DOCK

August 6, 1999

Sample Number	Reporting Limit micro grams	Location Totals[1] micro grams / 100cm^2
779-07271999-13-501	0.1_{ug}	Floor $<0.1_{ug/100cm^2}$
779-07271999-13-502	0.1_{ug}	Floor $<0.1_{ug/100cm^2}$
779-07271999-13-503	0.1_{ug}	Floor $<0.1_{ug/100cm^2}$
779-07271999-13-504	0.1_{ug}	Floor $<0.1_{ug/100cm^2}$

[1] See attached map of covered dock for approximate smear locations. Smears taken near Be hopper, also one in room 162. Smears 1-4 taken pre cutting of duct into room 162.

Building 779, Room 162, Beryllium Surface Control Levels

~~February 26, 1999~~ WR
7·27·99
pre cutting

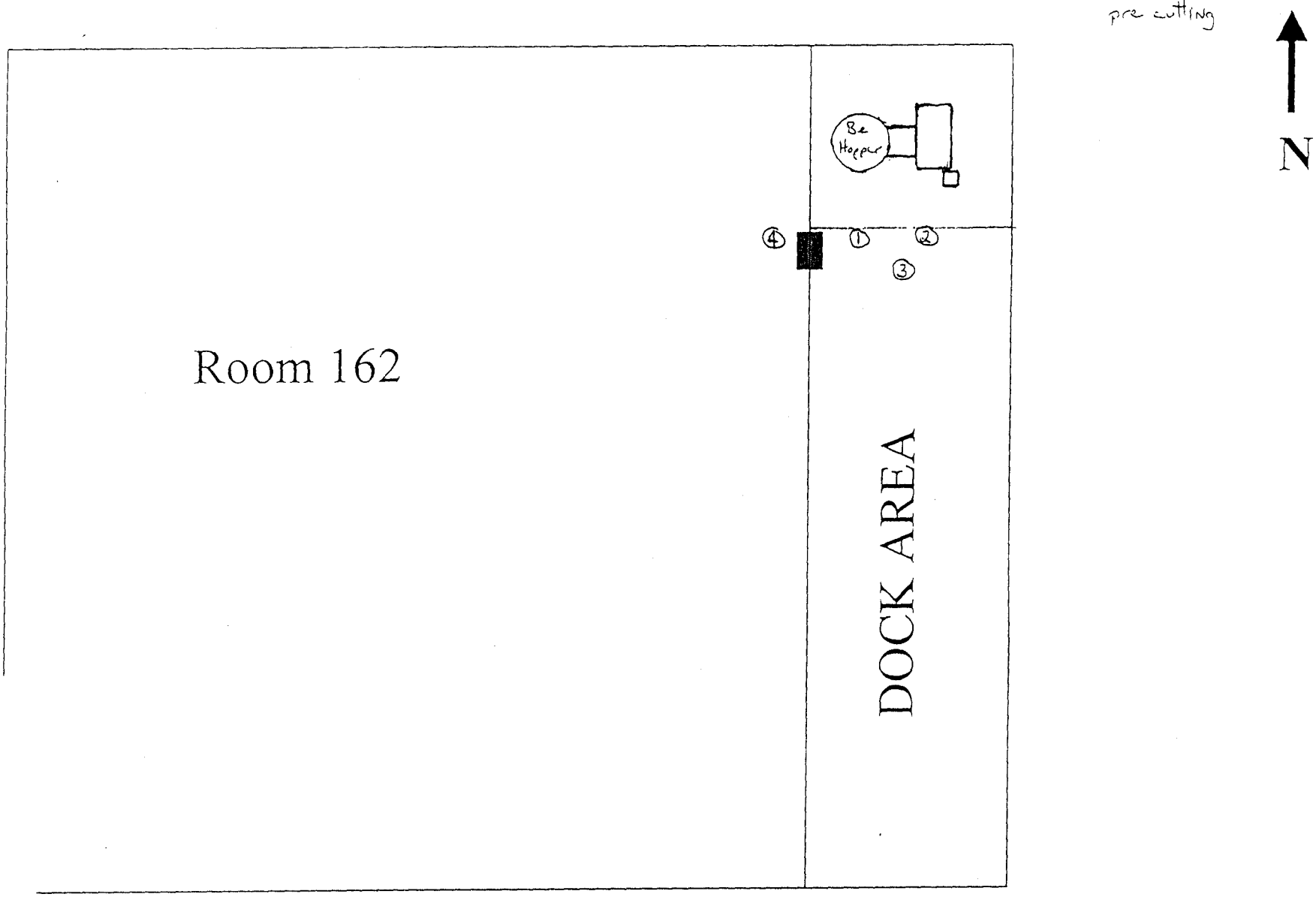

146

BUILDING 779

BERYLLIUM SMEAR RESULTS

Be HOPPER COVERED DOCK

August 6, 1999

Sample Number	Reporting Limit micro grams	Location Totals[1] micro grams/100cm^2
779-07281999-13-501	0.1$_{ug}$	Floor <0.1$_{ug/100cm^2}$
779-07281999-13-502	0.1$_{ug}$	Floor <0.1$_{ug/100cm^2}$
779-07281999-13-503	0.1$_{ug}$	Floor <0.1$_{ug/100cm^2}$
779-07281999-13-504	0.1$_{ug}$	Floor <0.1$_{ug/100cm^2}$
779-07281999-13-505	0.1$_{ug}$	Floor <0.1$_{ug/100cm^2}$
779-07281999-13-506	0.1$_{ug}$	Floor <0.1$_{ug/100cm^2}$
779-07281999-13-507	0.1$_{ug}$	Floor <0.1$_{ug/100cm^2}$
779-07281999-13-508	0.1$_{ug}$	Floor <0.1$_{ug/100cm^2}$

[1] See attached map of covered dock for approximate smear locations. Smears taken around Be hopper. Smears 1-4 taken pre cutting of duct pipe and 5-8 taken after cutting done.

147

Building 779, Room 162, Beryllium Surface Control Levels

~~February 26, 1999~~ HR
7·28·99
pre cutting 1-4
post cutting 5-8

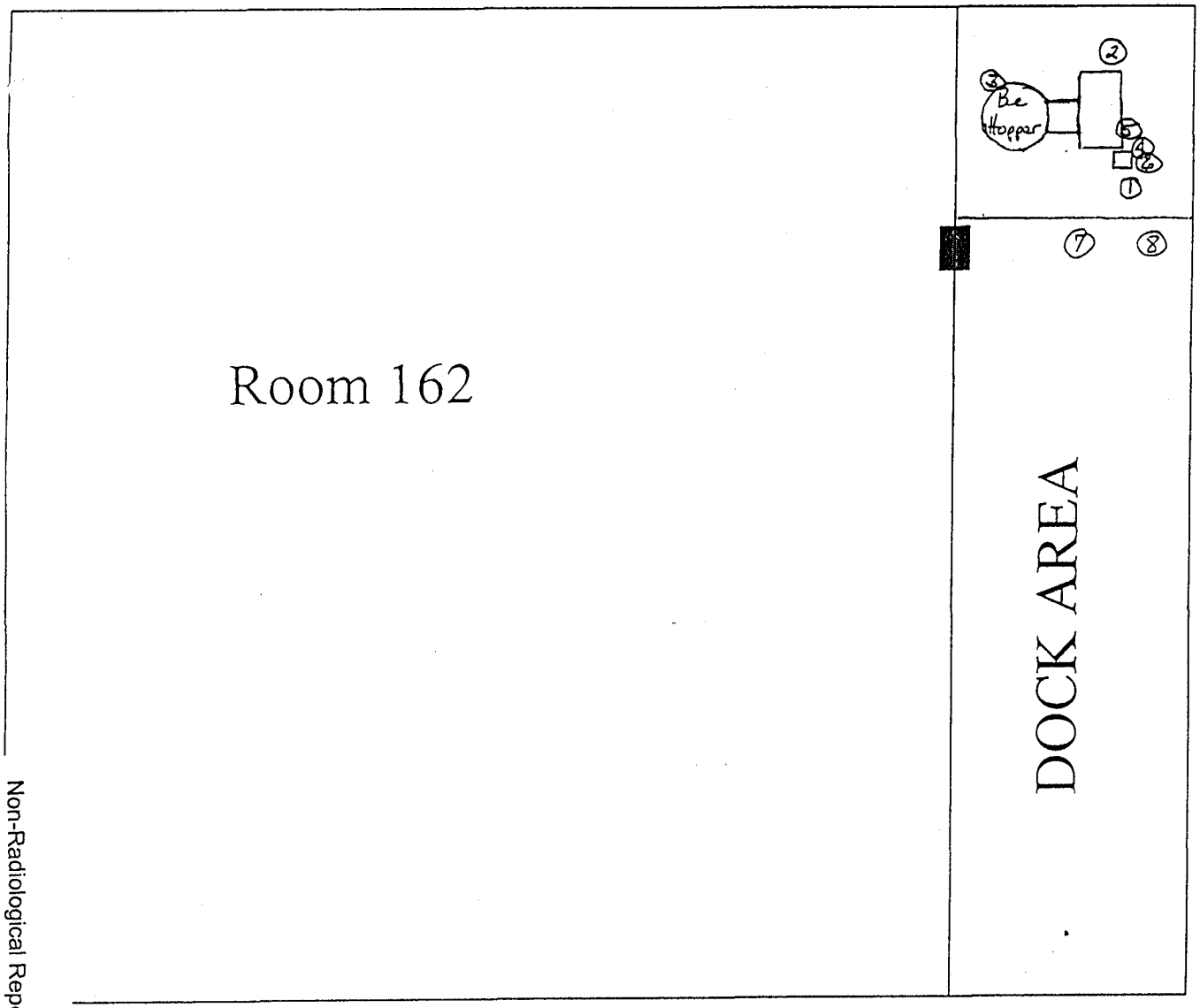

N

148

BUILDING 779

BERYLLIUM SMEAR RESULTS

COVERED DOCK

August 6, 1999

Sample Number	Reporting Limit micro grams	Location Totals[1] micro grams/100cm^2
779-07311999-13-502	0.1$_{ug}$	Floor <0.1$_{ug/100cm^2}$
779-07311999-13-503	0.1$_{ug}$	Floor <0.1$_{ug/100cm^2}$
779-07311999-13-504	0.1$_{ug}$	Floor <0.1$_{ug/100cm^2}$
779-07311999-13-505	0.1$_{ug}$	Floor <0.1$_{ug/100cm^2}$
779-07311999-13-506	0.1$_{ug}$	Floor <0.1$_{ug/100cm^2}$
779-07311999-13-507	0.1$_{ug}$	Floor <0.1$_{ug/100cm^2}$

[1] See attached map of covered dock for approximate smear locations. Smears taken after Be hopper removed from covered dock. Smears 2-7 taken post removal.

Building 779, Room 162, Beryllium Surface Control Levels

February 26, 1999

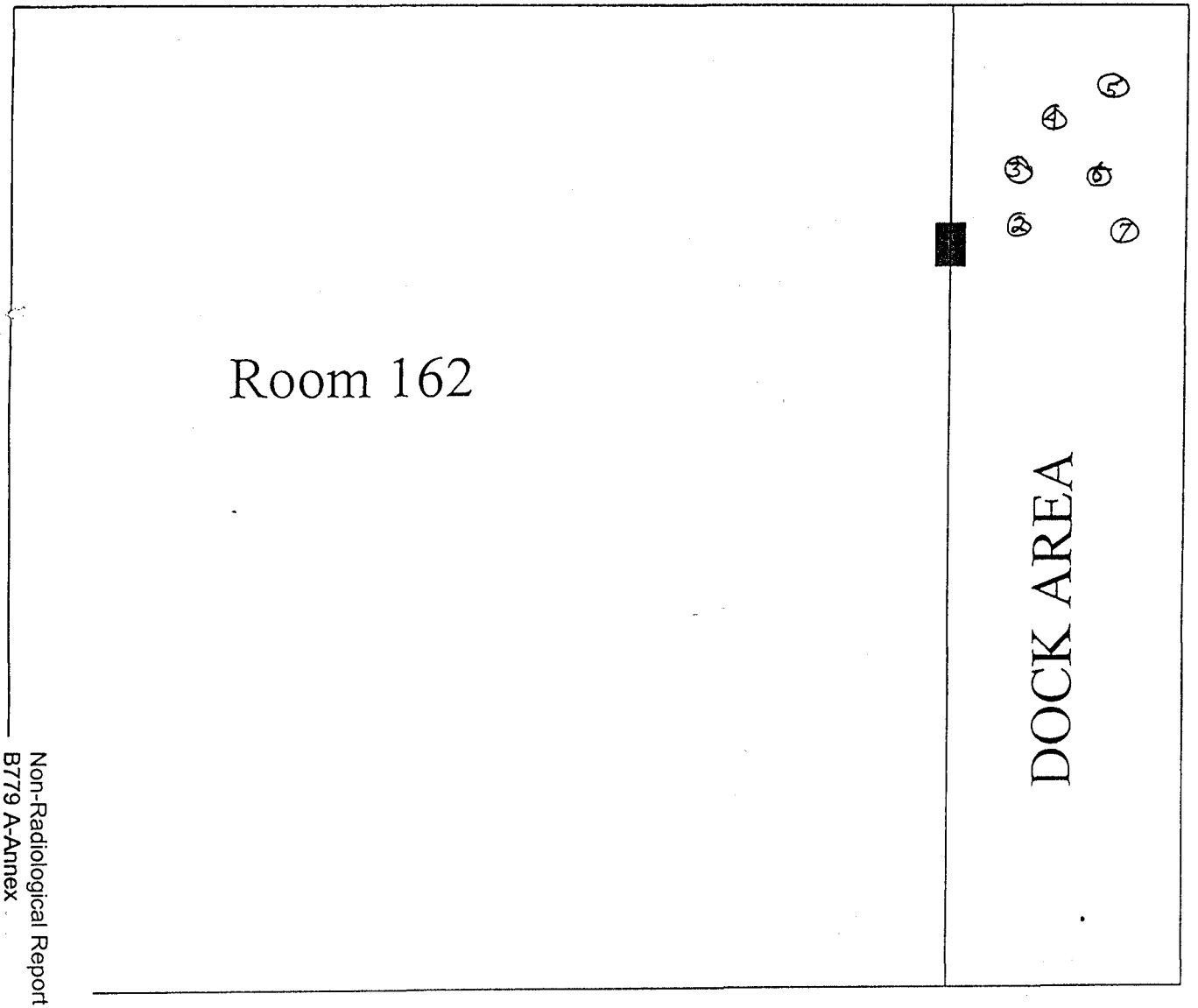

N

150

BUILDING 779

BERYLLIUM SMEAR RESULTS

ROOF OF COVERED DOCK

August 9, 1999

Sample Number	Reporting Limit micro grams	Location Totals micro grams/100cm
779-07151999-13-503	0.1_{ug}	Be Hopper Exhaust Internal $<0.1_{ug/100cm^2}$
779-07151999-13-504	0.1_{ug}	Be Hopper Exhaust Internal $<0.1_{ug/100cm^2}$

[1] See attached map of Be exhaust for approximate smear locations. Smears taken in exhaust running above the covered dock. Smear taken while full negative on.

151

Building 779

Beryllium Smear Locations

Beryllium Exhaust Line

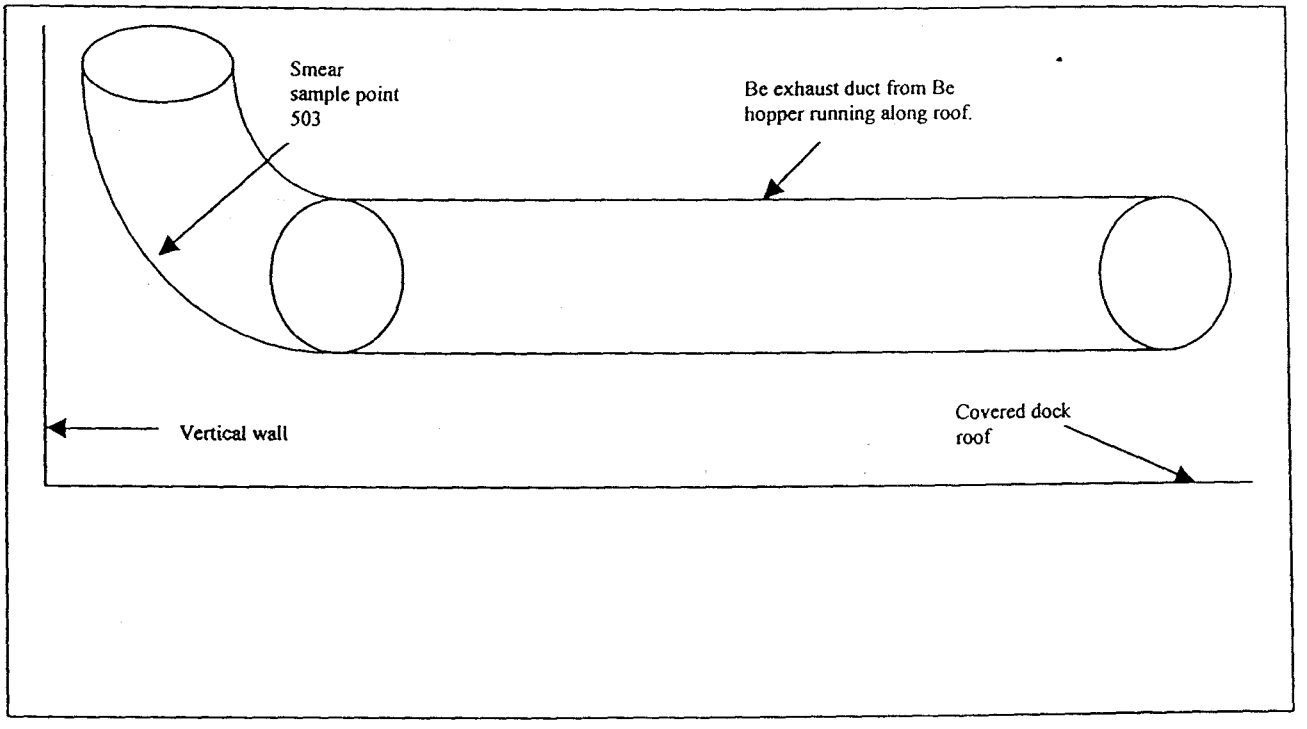

152

Building 779

Beryllium Smear Locations

Beryllium Exhaust Line

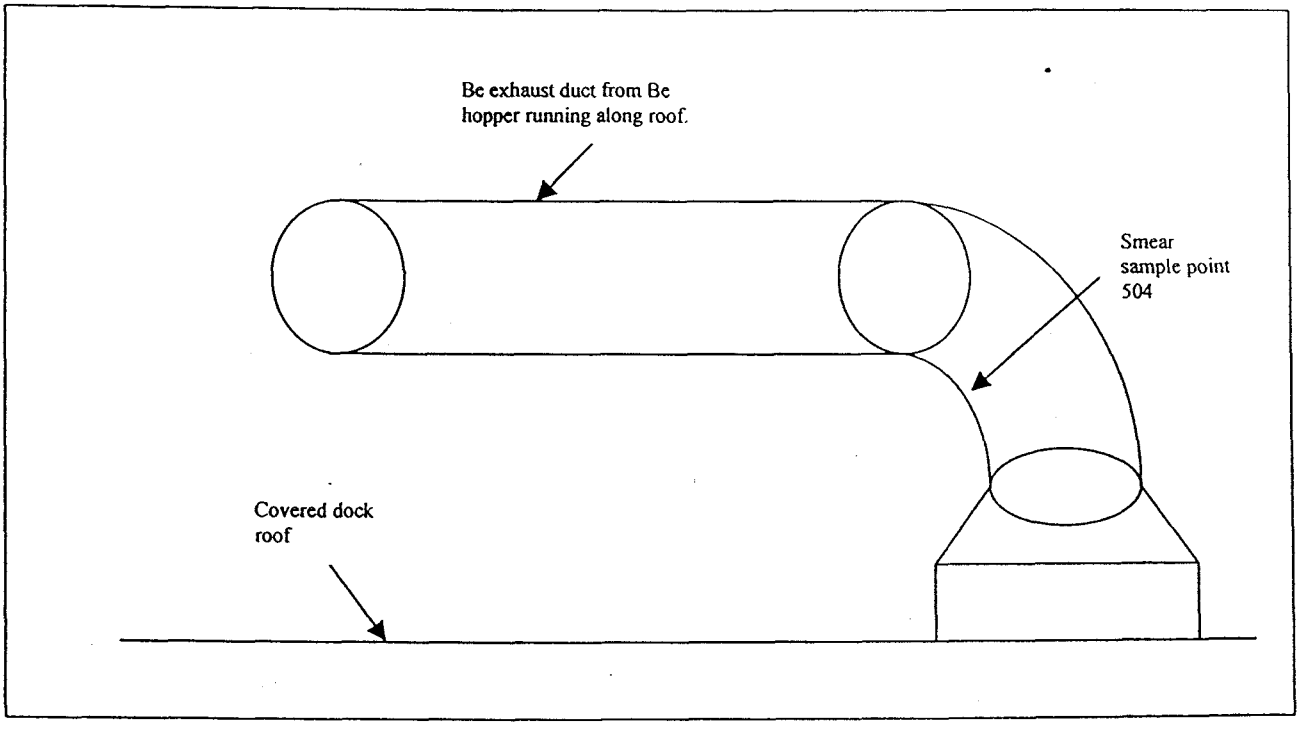

153

Appendix D

RCRA Hazardous Substances

Results (Solids)

PAINT CHIP BULK SAMPLE DATA TABLE 2-1

Sample Number	Sample Description and Location	Lab Result TCLP * / (ICP)
779-980416-MS-001	Green/white on drywall; from room 150, N wall, 1' W of N exit, 4' from the floor.	ND / (arsenic, barium, cadmium, chromium, **lead**, mercury, selenium, silver, others)
779-980416-MS-002	Brown/green/red primer on metal; from room 150 door jamb, N side, 2' from the floor.	ND / (arsenic, barium, cadmium, **chromium, lead**, mercury, **selenium**, silver, others)
779-980416-MS-003	Beige/green on cinderblock; from room 156 N wall, 8' W of NE corner, 6' from the floor.	ND / (arsenic, barium, cadmium, chromium, **lead**, mercury, selenium, silver, others)
779-980416-MS-004	Magenta on cinderblock; from room 157 S wall, 3' E of SW corner, 4' from the floor.	ND / (arsenic, barium, cadmium, chromium, **lead**, mercury, selenium, silver, others)
779-980416-MS-005	Orange/lt green on cinderblock; from room 157, W wall, 9' N of S wall, 4' from the floor.	ND / (arsenic, barium, cadmium, chromium, **lead**, mercury, selenium, silver, others)
779-980416-MS-006	White on concrete; from room 150 ceiling, 10' N of S entry, 28' W of E wall.	ND / (arsenic, barium, cadmium, chromium, **lead**, mercury, selenium, silver, others)
779-980416-MS-007	Yellow on cinderblock; from room 157, N wall, center.	ND / (arsenic, barium, cadmium, chromium, **lead**, mercury, selenium, silver, others)
779-980416-MS-008	Blue on cinderblock; from room 157, E wall center, N end.	ND / (arsenic, barium, cadmium, chromium, **lead**, mercury, selenium, silver, others)
779-980416-MS-009	Off-white on cinderblock; from room 159, W wall, 11' N of SW corner, 5' from the floor.	ND / (arsenic, barium, cadmium, chromium, **lead**, mercury, selenium, silver, others)

*Note: TCLP column denotes in excess of max concentration. Otherwise ND, which means None Detected. ICP column denotes metals detected. Please refer to Lab Data S'

155

LEAD/METALS IN PAINT
CHARACTERIZATION REPORT
FOR BUILDING 779 CLUSTER

Sample Number	Sample Description and Location	Lab Result TCLP * / (ICP)
779-980416-MS-010	Beige/lime green/ on cinderblock; from 237 hall, W wall, 11' S of stairs, 3' from the floor.	ND / (arsenic, barium, cadmium, chromium, **lead**, mercury, **selenium**, silver, others)
779-980416-MS-011	Light blue on plaster; from 777 bridge, N wall, 12' W of E entry, 3' from the floor.	ND / (arsenic, barium, cadmium, chromium, **lead**, mercury, selenium, silver, others)
779-980416-MS-012	Black on drywall; from room 234B, E wall, 2' S of E entry, 4' from the floor.	ND / (arsenic, **barium**, cadmium, chromium, **lead**, mercury, selenium, silver, others)
779-980416-MS-013	Lime green/pink on cinderblock; from room 234, E wall, 3' N of 228 entry, 4' from the floor.	ND / (arsenic, **barium**, cadmium, chromium, **lead**, **mercury**, selenium, silver, others)
779-980416-MS-014	Red-orange/tan on plaster; from room 234, N wall, 3' E of NW corner, 6' from the floor.	ND / (arsenic, barium, cadmium, **chromium**, **lead**, mercury, selenium, silver, others)
779-980416-MS-015	Lime yellow/tan on plaster; from room 234, W wall, 2' N of SW corner, 3' from the floor.	ND / (arsenic, barium, cadmium, chromium, **lead**, mercury, **selenium**, silver, others)
779-980416-MS-016	Forest-lime green on cinderblock; from room 228 W wall, 10' S of W entry, 4' from the floor.	ND / (arsenic, **barium**, cadmium, chromium, **lead**, **mercury**, selenium, silver, others)
779-980416-MS-017	Pea green/tan on plaster; from room 228 far S wall, 6' E of SW corner, 3' from the floor.	ND / (arsenic, barium, cadmium, **chromium**, **lead**, mercury, selenium, silver, others)
779-980416-MS-018	Light yellow/tan on cinderblock; from room 228 N wall, 5' E of NW corner, 4' from the floor.	ND / (arsenic, **barium**, cadmium, chromium, **lead**, **mercury**, selenium, silver, others)
779-980416-MS-019	Aqua/tan on cinderblock and metal; from room 228 S wall and 222 entry door jamb, 3' from the floor.	ND / (arsenic, **barium**, cadmium, chromium, **lead**, **mercury**, selenium, silver, others)

*Note: TCLP column denotes in excess of max concentration. Otherwise ND, which means None Detected. ICP column denotes metals detected. Please refer to Lab Data

156

LEAD/METALS IN PAINT
CHARACTERIZATION REPORT
FOR BUILDING 779 CLUSTER

Sample Number	Sample Description and Location	Lab Result TCLP * / (ICP)
779-980416-MS-020	Light pink/beige on cinderblock; from room 222 E wall, 8' N of SE corner, 4' from the floor.	ND / (arsenic, **barium**, cadmium, chromium, **lead**, **mercury**, selenium, silver, others)
779-980416-MS-021	Pink/beige on concrete; from room 222 W wall, 12' S of NW corner, 3' from the floor.	ND / (arsenic, barium, cadmium, chromium, **lead**, **mercury**, selenium, silver, others)
779-980416-MS-022	Lt. green/lt. blue/tan on concrete and cinderblock; from room 220 W wall, 10' N of 222 entry, 3' from the floor.	ND / (arsenic, **barium**, cadmium, chromium, **lead**, **mercury**, selenium, silver, others)
779-980416-MS-023	Lt. blue/off-white on metal door; from room 220/218 door, lower left.	chromium / (arsenic, barium, **cadmium**, **chromium**, **lead**, mercury, selenium, silver, others)
779-980416-MS-024	Lt. pea green on drywall; from room 277 N wall, 2' W of entry, 4' from the floor.	ND / (arsenic, barium, cadmium, chromium, lead, **mercury**, selenium, silver, others)
779-980416-MS-025	Lt. green/magenta on drywall; from room 274 N wall, 4' W of entry, 4' from the floor.	ND / (arsenic, barium, cadmium, chromium, **lead**, **mercury**, selenium, silver, others)
779-980416-MS-026	Yellow on cinderblock; from room 221C E wall, 3' S of NE corner, 4' from the floor.	ND / (arsenic, barium, cadmium, chromium, **lead**, **mercury**, selenium, silver, others)
779-980416-MS-027	Lt. pink/beige on drywall; from room 275H N wall, 3' W of 275 entry, 5' from the floor.	ND / (arsenic, barium, cadmium, chromium, lead, **mercury**, selenium, silver, others)
779-980416-MS-028	Lime green on drywall; from room 272 E wall, 4' S of entry, 3' from the floor.	ND / (arsenic, barium, cadmium, **chromium**, **lead**, **mercury**, selenium, silver, others)
779-980416-MS-029	V. Lt. Yellow on cinderblock; from room 229 N wall, 1' E of NW corner, 4' from the floor.	ND / (arsenic, barium, cadmium, chromium, **lead**, **mercury**, selenium, silver, others)

*Note: TCLP column denotes in excess of max concentration. Otherwise ND, which means None Detected. ICP column denotes metals detected. Please refer to Lab Data

157

LEAD/METALS IN PAINT
CHARACTERIZATION REPORT
FOR BUILDING 779 CLUSTER

Sample Number	Sample Description and Location	Lab Result TCLP * / (ICP)
779-980416-MS-030	Blue on plaster; from room 231 S wall, 3' E of SW corner, 3' from the floor.	ND / (arsenic, barium, cadmium, **chromium, lead, mercury,** selenium, silver, others)
779-980416-MS-031	Tan/beige/red/maroon on metal; from room 231/216 Hall, center of door, E jamb.	ND / (arsenic, barium, cadmium, **chromium, lead,** mercury, selenium, silver, others)
779-980416-MS-032	Textured beige/tan on concrete and cinderblock; from 779B exterior S wall, 10' W of door 20, 2' from the floor.	ND / (arsenic, barium, cadmium, chromium, lead, **mercury,** selenium, silver, others)
779-980416-MS-033	Textured beige/tan on cinderblock; from 779A exterior N wall, 12' W of door 6, 3' from the ground.	ND / (arsenic, barium, cadmium, chromium, lead, **mercury,** selenium, silver, others)
779-980416-MS-034	Textured beige/tan on cinderblock; from 779 exterior N wall, 30' W of door 16, 5' from the ground.	ND / (arsenic, barium, cadmium, chromium, lead, **mercury,** selenium, silver, others)
779-980416-MS-035	Textured beige/tan on cinderblock; from 729 exterior W wall, 7' N of W entry, 1' from the ground.	ND / (arsenic, barium, cadmium, chromium, lead, **mercury,** selenium, silver, others)
779-980416-MS-036 (QA)	Textured beige/tan on cinderblock; from 729 exterior W wall, 7' N of W entry, 1' from the ground.	ND / (arsenic, barium, cadmium, chromium, lead, **mercury,** selenium, silver, others)
779-980416-MS-037	White gloss on cinderblock; from 729, room 105 S wall, 10' E of SW corner, 5' from the floor.	ND / (arsenic, barium, cadmium, chromium, lead, mercury, selenium, silver, others)
779-980416-MS-038	White gloss/grey gloss on concrete; from 782 E wall, 25' S of NE corner, 4' from the floor.	ND / (arsenic, barium, cadmium, chromium, **lead,** mercury, selenium, silver, others)
779-980416-MS-039	White/beige/lt. green on cinderblock; from room 160, W entry wall, NW corner, 4' from the floor.	lead / (arsenic, barium, cadmium, chromium, **lead,** mercury, selenium, silver, others)

*Note: TCLP column denotes in excess of max concentration. Otherwise ND, which means None Detected. ICP column denotes metals detected. Please refer to Lab Dat

158

LEAD/METALS IN PAINT
CHARACTERIZATION REPORT
FOR BUILDING 779 CLUSTER

Sample Number	Sample Description and Location	Lab Result TCLP * / (ICP)
779-980416-MS-040	Lt. blue/white on cinderblock; from room 154 E wall, 15' S of NE corner, 4' from the floor.	ND / (arsenic, barium, cadmium, chromium, **lead**, mercury, selenium, silver, others)
779-980416-MS-041	Tan/green ceramic tile; from room 167 restroom area N wall, 4' E of NE corner, 4' from the floor.	ND / (arsenic, barium, cadmium, chromium, **lead,** mercury, selenium, silver, others)
779-980416-MS-042 (QA)	Tan/green ceramic tile; from room 167 restroom area N wall, 4' E of NE corner, 4' from the floor.	ND / (arsenic, barium, cadmium, chromium, **lead**, mercury, selenium, silver, others)
779-980416-MS-043	Light brown 6" ceramic tile; from room 167 at N devising wall to restroom/vestibule area, E end.	ND / (arsenic, barium, cadmium, chromium, lead, mercury, selenium, silver, others)
779-980416-MS-044	Battleship grey on concrete; from 121A floor, 11' N of S entry, 3' E of W wall.	ND / (arsenic, barium, cadmium, **chromium**, lead, mercury, selenium, silver, others)
779-980721-MS-001	Charcoal grey sheet metal flashing; from 779 roof duct plenum far west N-S extention, 7' N of SE angle, west side.	NA / (arsenic, barium, cadmium, chromium, lead, mercury, selenium, silver, others)
779-980721-MS-002	Lt. brown/white back corrugated sheet metal; 779 from roof duct plenum far west N-S extention wall, 7'N of SE angle.	NA / (arsenic, barium, cadmium, **chromium**, lead, mercury, selenium, silver, others)

*Note: TCLP column denotes in excess of max concentration. Otherwise ND, which means None Detected. ICP column denotes metals detected. Please refer to Lab Data Sh

159

____ of ____

SAMPLERS (Signature) M Schluterbusch [signature] / X4215 P 5244 F 6530

REPORT IDENTIFICATION NUMBER (RIN) 98A2065 LAB/LOCATION: 559

RFETS CONTRACTOR SEG/RMRS

ROCKY FLATS
ENVIRONMENTAL TECHNOLOGY SITE
CHAIN OF CUSTODY NUMBER MS-001

DATE	TIME	EVENT	BOTTLE	USER ID	~~LOCATION~~	CONTAINER	MATRIX	Preservation: Cooled to 4°C	NaOH	HNO3	H2SO4	HCl	Analyses
4/28	1530	001	001	T79-980416-	MS-001								
					-002								
					-003								
					-004								
					-005								
					-006								
					-007								
					-008								
					-009								
					-010								
					-011								
					-012	-016	-021	-038					

Non-Radiological Closeout Report
for Building 779
Page D6 of D83

Relinquished By:	Date	Time	Received By/Organization	Date	Time	LABORATORY USE ONLY	Y/N
M Schluterbusch	4/28/98	1530	779 Radops lock box			PCKG REC'D/CUSTODY SEALS INTACT	
						SAMPLE LABELS/COCs AGREE	
						TEMPERATURE AT TIME OF RECEIPT ___°C	

REMARKS:

Charge #

Project

Shipping Re nts: Overnight Delivery ☐ 2-Day Delivery ☐ Air L

APO COC 6/5/97

'LERS (Signature) M Schlutebusch [signature] Phone 4215 Pgr 5244

RT IDENTIFICATION NUMBER (RIN) 98A2065 LAB/LOCATION: 559

'S CONTRACTOR RMRS/SEG

CKY FLATS
'IRONMENTAL TECHNOLOGY SITE
AIN OF CUSTODY NUMBER SEG 006

TIME	EVENT	BOTTLE	USER ID	~~LOCATION~~	CONTAINER	MATRIX	Preservation: Cooled to 4° C	NaOH	HNO3	H2SO4	HCl	Analyses: Total Metals + Hg	TCLP Metals + Hg
1	001	001	779-980416	MS-001								X	X
		002	779-980416	MS-002								X	X
		003		-003								X	X
		004		-004								X	X
		005		-005								X	X
		006		-006								X	X
		007		-007								X	X
		008		-008								X	X
		009		-009								X	X
		010		-010								X	X
		011		-011								X	X
		012		-012								X	X

Non-Radiological Closeout Report
for Building 779
Page D7 of D83

shed By:	Date	Time	Received By/Organization	Date	Time	LABORATORY USE ONLY	Y/N
[signature]	5/13/98	1410	LB Johnson Labs	5/13/98	1410	PCKG REC'D/CUSTODY SEALS INTACT	N/A
						SAMPLE LABELS/COCs AGREE	
						TEMPERATURE AT TIME OF RECEIPT ___ °C	
						Charge #	
						Project	

KS: PRIORITY 2

ng Requirements: Overnight Delivery ☐ 2-Day Delivery ☐ Air Bill No. _____

A COC 6/5/97

161

SAMPLERS (Signature) Schlutenbusch / Phone 4215 psc 5244

REPORT IDENTIFICATION NUMBER (RIN) 98A2065 LAB/LOCATION: 559

RFETS CONTRACTOR RMRS/SEG

ROCKY FLATS
ENVIRONMENTAL TECHNOLOGY SITE
CHAIN OF CUSTODY NUMBER SEG-006

DATE	TIME	EVENT	BOTTLE	USER ID	~~LOCATION~~	CONTAINER	MATRIX	Preservation: Cooled to 4°	NaOH	HNO3	H2SO4	HCl	Analyses:		Total Metals Hg		TCLP Metals Hg										
5/13/98	-	001	013	779-980416	-MS-013										X		X										
			014		-014										X		X										
			015		-015										X		X										
			016		-016										X		X										
			017		-017										X		X										
			018		-018										X		X										
			019		-019										X		X										
			020		-020										X		X										
			021		-021										X		X										
			022		-022										X		X										
			023		-023										X		X										
			024		-024										X		X										

Non-Radiological Closeout Report for Building 779
Page D8 of D83 Closeout Report

Relinquished By:	Date	Time	Received By/Organization	Date	Time	LABORATORY USE ONLY	Y/N
[signature]	5/13/98	1410	LB Johnson Labs	5/13/98	1410	PCKG REC'D/CUSTODY SEALS INTACT	N/A
						SAMPLE LABELS/COCs AGREE	✓
						TEMPERATURE AT TIME OF RECEIPT ___ °C	

REMARKS: PRIORITY 2

Charge #

Project

Shipping Requirements: Overnight Delivery ☐ 2-Day Delivery ☐

AF JC 6/5/97

162

AMPLERS (Signature) Schlutenbusch, M Schlutenbusch, Phone 4215 pge 5244

PORT IDENTIFICATION NUMBER (RIN) 98A2065 LAB/LOCATION: 559

FETS CONTRACTOR RMRS/SEG

OCKY FLATS
NVIRONMENTAL TECHNOLOGY SITE
HAIN OF CUSTODY NUMBER SEG-006

DATE	TIME	EVENT	BOTTLE	USER ID	LOCATION	CONTAINER	MATRIX	Cooled to 4°C	NaOH	HNO3	H2SO4	HCl			Total Metals + Hg	TCLP Metals + Hg									
5/13	1	001	025	779-980416	-MS-025									X		X									
			026		-026									X		X									
			027		-027									X		X									
			028		-028									X		X									
			029		-029									X		X									
			030		-030									X		X									
			031		-031									X		X									
			032		-032									X		X									
			033		-033									X		X									
			034		-034									X		X									
			035		-035									X		X									
			036		-036									X		X									

Non-Radiological Closeout Report
for Building 779
Page 99 of 183
Administrative Area

Relinquished By:	Date	Time	Received By/Organization	Date	Time
M Schlutenbusch	5/13/98	1410	LB Johnson Sales	5/13/98	1410

LABORATORY USE ONLY	Y/N
PCKG REC'D/CUSTODY SEALS INTACT	N/A
SAMPLE LABELS/COCs AGREE	✓
TEMPERATURE AT TIME OF RECEIPT ___ °C	

MARKS: PRIORITY 2

ipping Requir: Overnight Delivery ☐ 2-Day Delivery ☐

APO C 6/5/97

AMPLERS (Signature) M Schluterbusch / Ph 4215 pgs 5244

PORT IDENTIFICATION NUMBER (RIN) 98A2065 LAB/LOCATION: 559

ETS CONTRACTOR RMRS/SEG

OCKY FLATS
NVIRONMENTAL TECHNOLOGY SITE
HAIN OF CUSTODY NUMBER SEG-006

DATE	TIME	EVENT	BOTTLE	USER ID	~~LOCATION~~	CONTAINER	Preservation	Total Metals+Hg	TCLP Metals+Hg
5/98	-	001	037	779-980416	MS-037		X	X	X
			038		-038		X	X	X
			039		-039		X	X	X
			040		-040		X	X	X
			041		-041			X	X
			042		-042			X	X
			043		-043			X	X
			044		-044		X	X	X

Non-Radiological Closeout Report for Building 779
Page D10 of D83

Relinquished By:	Date	Time	Received By/Organization	Date	Time
M Schluterbusch	5/13/98	1410	LB Johnson Labs	5/13/98	1410

LABORATORY USE ONLY	Y/N
PCKG REC'D/CUSTODY SEALS INTACT	N/A
SAMPLE LABELS/COCs AGREE	✓
TEMPERATURE AT TIME OF RECEIPT ___ °C	
Charge #	
Project	

MARKS:

ipping Requi Overnight Delivery ☐ 2-Day Delivery ☐ Air Bill

AP\ )C 6/5/97

ROCKY FLATS
ENVIRONMENTAL TECHNOLOGY SITE
CHAIN OF CUSTODY NUMBER: 98A5204#001

SAMPLERS (Signature): M Schlutenhaus

REPORT IDENTIFICATION NUMBER (RIN): 98A5204

LABORATORY: Building 559 Laboratory

AGGREGATE AREA: 779

RFETS CONTRACTOR: RMRS

Bottle Num.	User Samp. Num.	Date	Time	Location	Container	Matrix	Preservation	RS08A007 (TCLP Inorganics wo Hg)	PA03A032 (TCLP Mercury - 559)
98A5204-001.001	779-980721-MS	001			100G P/G		None	P	P
98A5204-002.001	779-980722-MS	002			100G P/G		None	P	P
~~98A5204-003.001~~					~~100G P/G~~		~~None~~		
~~98A5204-004.001~~					~~100G P/G~~		~~None~~		
~~98A5204-005.001~~					~~100G P/G~~		~~None~~		

7/21/98

ENTERED

POSSESSION

Sign/Print Names

Relinquished By: M Schlutenhaus	Date/Time 7/21/98 @ 1424	Received By: L B Johnson Labs	Date/Time 7/21/98 1424
Relinquished By: L B Johnson Labs	Date/Time 7/21/98 1424	Received By: Mig 102-6	Date/Time 7/21/98 1424
Relinquished By	Date/Time	Received By	Date/Time
Relinquished By	Date/Time	Received By	Date/Time

REMARKS: LAB REQUIRES SHEET METAL SAMPLES TO BE 1 INCH SQUARES OR LESS
Sheet metal samples - burrs & sharp edges

Charge #: KT03CX00
Project: WASTE PROJECTS

Shipping Requirements:

Air Bill No.:

FAXED 7/21/98 APO

Page 1 of 1

166

ROCKY FLATS
ENVIRONMENTAL TECHNOLOGY SITE
CHAIN OF CUSTODY NUMBER: 98A5204#001

SAMPLERS (Signature): M Schlutenhaus

REPORT IDENTIFICATION NUMBER (RIN): 98A5204

LABORATORY: Building 559 Laboratory

AGGREGATE AREA: 779

RFETS CONTRACTOR: RMRS

Bottle Num.	User Samp. Num.	Date	Time	Location	Container	Matrix	Preservation	RS08A007 (TCLP Inorganics wo Hg)	PA03A032 (TCLP Mercury - 559)
98A5204-001.001	779-980721-MS	001			100G P/G		None	P	P
98A5204-002.001	779-980722-MS	002			100G P/G		None	P	P
98A5204-003.001					100G P/G		None		
98A5204-004.001					100G P/G		None		
98A5204-005.001					100G P/G		None		

Sign/Print Names

OF POSSESSION

Relinquished By: M Schlutenhaus — Date/Time 7/21/98 @ 1424

Received By: L B Johnson Labs — Date/Time 7/21/98 1424

Relinquished By — Date/Time

Received By — Date/Time

Relinquished By — Date/Time

Received By — Date/Time

Relinquished By — Date/Time

Received By — Date/Time

REMARKS: LAB REQUIRES SHEET METAL SAMPLES TO BE 1 INCH SQUARES OR LESS

Sheet metal samples - burrs & sharp edges

Charge #: KT03CX00

Project: WASTE PROJECTS

Shipping Requirements:

Air Bill No.:

Page 1 of 1

Turnaround Times for 98A5204

7/17/98 9:31:52 AM

COC Num.	Bottle Num.	Line Item Code	Processing
98A5204#001	LAB: Building 559 Laboratory		
	98A5204-001.001		
		PA03A032	Priority
		RS08A007	Priority
	98A5204-002.001		
		PA03A032	Priority
		RS08A007	Priority
	98A5204-003.001		
		PA03A032	Priority
		RS08A007	Priority
	98A5204-004.001		
		PA03A032	Priority
		RS08A007	Priority
	98A5204-005.001		
		PA03A032	Priority
		RS08A007	Priority

167

AMPLE SUMMARY FOR RIN: 98A5204

RIN Title:
Project Name: WASTE PROJECTS
Task Name: BLDG 779
gregate Area:

Sampling Team:
Sampling Mgr/Coordinator:
Samplers:
Field Logbook ID:
Matrix Class:

sample summary is supplied to waste generators as notification of sample collection. Inquires into the status of this sampling effort may be directed to the Analytical Services Division (ASD).

ttle Number	Customer Bottle Number	Location	LIC (See Attached)	Laboratory	Date Collected	Date Shipped	Date Returned	Comments
5204-001.001			1,2	Building 559 Laboratory				
5204-002.001			1,2	Building 559 Laboratory				
5204-003.001			1,2	Building 559 Laboratory				
5204-004.001			1,2	Building 559 Laboratory				
5204-005.001			1,2	Building 559 Laboratory				

ng Excess Sample Material:

modified sample material remaining after analysis is generally returned to the generator. The generator must be prepared to receive and dispose of excess sample material for applicable state and deral regulations. Regulatory exclusions for returning excess sample material are specified in the Code of Colorado Regulation (CCR) 1007-3, Part 261.4(d) 'Samples'. If problems with the disposal of cess sample material are encountered, the Environmental Coordinator for the generation area should be contacted for resolution of the issues. Only sample material which has not been modified ring analysis will be returned. Material which has been acidified for preservation purposes will not be returned.

stomer Acknowledgement: _____
(Sign and Print Name)

ents:

m Code's:

PA03A032 (TCLP Mercury - 559)
RS01A007 (TCLP Inorganics wo Hg)

Date: 7/17/98 9:30:56 AM

L68

ANALYTICAL SERVICES DIVISION
SAMPLING AND ANALYSIS REQUEST FORM

ASD USE ONLY

RIN: 98A5204 Priority: Priority

ASD Project Lead: STONER, NORM Phone: 4289 Pager:

CUSTOMER INFORMATION

Date: 7/17/98 9:03:38

Project Charge No.:

Requestor: SCHLUTERBUSCH,MIKE Phone: 7215 Pager:
Bldg: Fax:

Secondary Contact: Phone: Pager:
Bldg: Fax:

Fax Data Results To: SAME Phone: 6538 Fax:

SAMPLE INFORMATION

Sample Location: BLDG 779

Sample Description and Sample Identifiers: SHEET METAL SAMPLES – Roof

Sample Matrix: ☐ Aqueous ☐ Org. Liquid ☒ Solid ☐ Sludge ☐ Multi Phase

When will sample be available for sampling? 7/17/98

When is data required by requestor?

Estimated quantity Available for Sampling:

Waste Stream ID No. (if known): Waste Stream Name (if known):

EPA CODES: MSDS: ○ Yes ◉ No ATTACHED: ○ Yes ◉ No

COMPATIBILITY CODE WFC/ IDC:

90 Day Area? ○ Yes ◉ No Start Date: End Date:

ANALYSES REQUESTED

☐ Alpha/Beta Screen	☐ Total VOA	☐ TCLP VOA	☐ pH	Other:
☐ Gross Alpha/Beta	☐ Total SVOAS	☐ TCLP SVOAS	☐ Fingerprint	TCLP HG
☐ Isotopics	☐ Total Metals (ICP)	☒ TCLP Metals	☐ IR	
☐ g/l Isotopics	☐ Total PCBs	☐ TCLP PCBs	Analyses Criticality Sensitive? ○ Yes ◉ No	
☐ Gamma Spec	☐ Total Herbicides	☐ TCLP Herbicides	If Yes: ○ Single ○ Double	Analyses:

RADIOLOGICAL ENTRY REQUIREMENTS

IS THIS A RADIOACTIVE WASTE STREAM? Suspected to be radioactive? ○ Yes ◉ No

☐ Pu ☐ Am ☐ U Other:

Located In: ☐ RBA ☐ RMA ☐ RMMA ☐ CA ☐ HCA ☐ RA ☐ HRA Other Area:

RCT Support: ○ Yes ◉ No Comments:

RWP Required: ○ Yes ◉ No

PWRE Required: ○ Yes ◉ No

GENERAL ENTRY REQUIREMENTS/SAFETY CONCERNS

☐ Plan of the Day	☐ Industrial Hygiene Assistance	☐ Electrical
☐ Maintenance Assistance	☐ Carcinogen Control Area	☐ IWCP
☐ Operator's Assistance	☐ Lock-out/Tag-out	☐ Confined Space
☐ Mechanical	☐ Waste Contains Fluorides	Other:

Special Instructions:

Requestor Signature:

RMRS

CHAIN OF CUSTODY/SAMPLE ANALYSIS REQUEST

C.O.C. # 99A5527 rr001

Page 1 of 1

Collector	Contact/Requester: Mike Schlitterbusch	Telephone No. 4215 MSIN FAX
RIN 99A5527	Sampling Origin: Bldg 779	Purchase Order/Charge Code: KT95AA00
Project Title	Logbook No.	Ice Chest No. Temp.
To (Lab) Building 559 Laboratory	Method of Shipment	Bill of Lading/Air Bill No.
Protocol		Offsite Property No.

POSSIBLE SAMPLE HAZARDS/REMARKS
** **

SPECIAL INSTRUCTIONS Hold Time Total Activity Exemption: Yes ☐ No ☐

Bottle No.	Customer Number	Matrix	Date	Time	Location	No/Type Container	Sample Analysis	Preservative: Packing
99A5527-001.001		SOLID	2/25/99	0900	Bldg 779	5-G P/G	RS05A048 (Mtls SW846) ~~[Rush]~~ PRIORITY MS 2/25/99	None None
99A5527-002.001		SOLID	2/25/99	0700		5-G P/G	RS05A048 (Mtls SW846) ~~[Rush]~~ PRIORITY MS	None None

MS 2/25/99

Relinquished By:	Date/Time	Received By:	Date/Time	Relinquished By:	Date/Time	Received By:	Date/Time
	2/25/99 @1350	LB Johnson	2/25/99 1350				

FINAL SAMPLE DISPOSITION: Disposal Method (e.g., Return to customer, per lab procedure, used in process) Disposed By Date/Time

Paint from 779 B S wall cages

MRS

CHAIN OF CUSTODY/SAMPLE ANALYSIS REQUEST

C.O.C. # 99A4089#001

Page 001 of 001

lector: M Schluterbusch	Contact/Requester: SCHLUTERBUSCH,MIKE	Telephone No. 4215.2126517 MSIN FAX 4308	
99A4089	Sampling Origin: B782	Purchase Order/Charge Code: KT95AA00	
ject Title: 779 D+D	Logbook No.	Ice Chest No. Temp.	
(Lab) Building 559 Laboratory	Method of Shipment: Hand carried	Bill of Lading/Air Bill No.	
tocol		Offsite Property No.	

SSIBLE SAMPLE HAZARDS/REMARKS

SPECIAL INSTRUCTIONS Hold Time Total Activity Exemption: Yes ☑ No ☐
ANALYZE TOTAL METALS FIRST TO DETERMINE IF TCLP METALS ARE REQUIRED.

Bottle No.	Customer Number	Matrix	Date	Time	Location	No/Type Container	Sample Analysis	Preservative; Packing
A4089-1001	782-98 12 08-MS-001	Solid	12/8/98	1400	B782 Box 140	5-G G	PA03A016 (Mercury) [Priority]; RS05A022 (Mtls Unfit SW846 w/o Hg) [Priority]	None 4 degrees C
A4089-1002	"	"	"	"	"	25-G G	PA03A016 (Mercury) [Priority]; RS08A006 (TCLP Metals) [Priority]	None 4 degrees C

Relinquished By:	Date/Time	Received By:	Date/Time	Relinquished By:	Date/Time	Received By:	Date/Time
	12/14/98 1455	B Johnson Labs	12/14/98 1455				
B Johnson Labs	12/14/98 1455	Mig 1026	12/14/98 1455				

FINAL SAMPLE DISPOSITION: Disposal Method (e.g., Return to customer, per lab procedure, used in process) Disposed By Date/Time

Commodore Advanced Sciences

CHAIN OF CUSTODY/SAMPLE ANALYSIS REQUEST

9810301 Date: 10/20/98

C.O.C.# 99Z3392#001

Page 1 of 1

Collector: TONYA SANSALINE	Contact/Requester: ROGER CICHORZ	Telephone No.: 966-2155 MSIN: FAX:
RIN: 99Z3392	Sampling Origin: 779	Purchase Order/Charge Code: KT95AA00
Project Title:	Logbook No.: NA	Ice Chest No.: NA Temp.:
To (Lab): Johns Manville	Method of Shipment: HAND CARRY	Bill of Lading/Air Bill No.:
Protocol:		Office Property No.:

POSSIBLE SAMPLE HAZARDS/REMARKS: ** **

SPECIAL INSTRUCTIONS: Hold Time: Total Activity Exemption: Yes ☐ No ☐

Batch No.	Customer Number	Matrix	Date	Time	Location	No/Type/Container	Sample Analysis	Preservative; Packing
99Z3392-001.001	9810150/33313	IM	NA	NA	779	1-SAMPLE P	D-07C012 (Metals by NIOSH 7300 (AIH)) [Routine]	N/A N/A
99Z3392-002.001	9810150/33343	SOLID	NA	NA	779	1-BAG N/A	E-10AA00 (TCLP Metals) [Routine]	N/A None

Relinquished By:	Date/Time	Received By:	Date/Time	Relinquished By:	Date/Time	Received By:	Date/Time
[signature]	10/20/98 [illegible]	[signature]	10/20/98 1162				
Relinquished By:	Date/Time	Received By:	Date/Time	Relinquished By:	Date/Time	Received By:	Date/Time
		[signature]	10/29/98 0630				
Relinquished By:	Date/Time	Received By:	Date/Time	Relinquished By:	Date/Time	Received By:	Date/Time
Relinquished By:	Date/Time	Received By:	Date/Time	Relinquished By:	Date/Time	Received By:	Date/Time

FINAL SAMPLE DISPOSITION: Disposal Method (e.g., Return to customer, per lab procedure, used in process) Disposed By: Date/Time:

SIN # MTLS01-A2 REPORT

COVER PAGE

INORGANIC ANALYSES DATA PACKAGE

Lab Name: Building 559 PA Inorganic Laboratories SOW No.: 7/93

Section: ICPAES

QC Report Number: SD052398.RPT SDG No.: MAY23

Lab Sample ID's beginning with 'X' are TCLP Extracts.

Revised TCLP Metals

Sample No.	APO Sample I. D.	Lab Sample ID.
1	X-98A2065-001	Bldg 779 Solid Paint Sample
2	X-98A2065-001 D	Bldg 779 Solid Paint Sample Lab Duplicate
3	X-98A2065-002	Bldg 779 Solid Paint Sample
4	X-98A2065-003	Bldg 779 Solid Paint Sample
5	X-98A2065-004	Bldg 779 Solid Paint Sample
6	X-98A2065-005	Bldg 779 Solid Paint Sample
7	X-98A2065-006	Bldg 779 Solid Paint Sample
8	X-98A2065-008	Bldg 779 Solid Paint Sample
9	X-98A2065-009	Bldg 779 Solid Paint Sample
10	X-98A2065-010	Bldg 779 Solid Paint Sample
11	X-98A2065-011	Bldg 779 Solid Paint Sample
12	X-98A2065-012	Bldg 779 Solid Paint Sample
13	X-98A2065-014	Bldg 779 Solid Paint Sample
14	X-98A2065-015	Bldg 779 Solid Paint Sample
15	X-TCLP EXT #1	TCLP Extraction Fluid Reagent Blank
16	EPA QC #21 STD	EPA QC # 21 Aqueous Laboratory Control Standard
17	EPA QC #7A STD	EPA QC # 7A Aqueous Laboratory Control Standard

Were ICP Inter-element Corrections applied? Yes/No Y

Were ICP Background Corrections applied? Yes/No Y

I have reviewed the following data for the Sample No.'s listed above.

ENTERED

Signature: R. Kelk

Date: 6/8/98 Title: Analytical Chemist

Signature: Yvonne B Mazza

Date: June 16, 1998 Title: Reviewer

Comments:

FAXED APO

113

FAXED

SIN # MTLS01-A2 REPORT

COVER PAGE

INORGANIC ANALYSES DATA PACKAGE

Lab Name: Building 559 PA Inorganic Laboratories SOW No.: 7/93

Section: ICPAES

QC Report Number: SD052598.RPT SDG No.: MAY25

ENTERED

TCLP metals

Lab Sample ID's beginning with 'X' are TCLP Extracts.

Sample No.	APO Sample I. D.	Lab Sample ID.
1	X-98A2065-007	Bldg 779 Solid Paint Sample
2	X-98A2065-017	Bldg 779 Solid Paint Sample
3	X-98A2065-017 D	Bldg 779 Solid Paint Sample - Lab Duplicate
4	X-98A2065-023	Bldg 779 Solid Paint Sample
5	X-98A2065-031	Bldg 779 Solid Paint Sample
6	X-98A2065-032	Bldg 779 Solid Paint Sample
7	X-98A2065-033	Bldg 779 Solid Paint Sample
8	X-98A2065-034	Bldg 779 Solid Paint Sample
9	X-98A2065-038	Bldg 779 Solid Paint Sample
10	X-98A2065-039	Bldg 779 Solid Paint Sample
11	X-98A2065-040	Bldg 779 Solid Paint Sample
12	X-98A2065-042	Bldg 779 Solid Paint Sample
13	X-98A2065-043	Bldg 779 Solid Paint Sample
14	X-98A2065-044	Bldg 779 Solid Paint Sample
15	X-TCLP EXT #1	TCLP Extraction Fluid Reagent Blank
16	EPA QC #21 STD	EPA QC # 21 Aqueous Laboratory Control Standard
17	EPA QC #7A STD	EPA QC # 7A Aqueous Laboratory Control Standard

Were ICP Inter-element Corrections applied? Yes/No Y

Were ICP Background Corrections applied? Yes/No Y

I have reviewed the following data for the Sample No.'s listed above.

Signature: R.C. Kell

Date: 6/11/98 Title: Analytical Chemist

Signature:

Date: Title: Reviewer

Comments:

FAXED

174

FORM 1A-1

INORGANIC ANALYSIS DATA SHEET

Lab Name: Building 559 PA Inorganic Laboratories Sample No.: 1

Lab Sample ID: X-98A2065-001 Bldg 779 Solid Paint Sample

Section: ICPAES

Lab Sample I.D.s beginning with X' indicates TCLP Extract.

% Solids for Sample : 100.0000

Date Sampled: 5/13/98 SDG No. : MAY23

Lab Receipt Date: 5/13/98 QC Report No.: SD052398.RPT

Matrix: Water ____ Soil ____ Sludge ____ Other X

Elements Identified and Measured

Concentration Units: mg/L

Analyte	Concentration	C	N V * E O O S + Q	M
Aluminum	1.8864	B		P
Antimony	0.3000	U		P
Arsenic	0.3000	U		P
Barium	0.1500	U		P
Beryllium	0.0150	U		P
Cadmium	0.0600	U		P
Calcium	612.3981	B	*	P
Chromium	0.1500	U		P
Cobalt	0.2559	B		P
Copper	0.3000	U		P
Iron	0.6000	U		P
Lead	1.1646	B		P
Magnesium	20.6913	B	*	P
Manganese	0.4314	B		P
Molybdenum	0.1500	U		P
Nickel	0.1500	U		P
Phosphorus	3.3699	B		P
Selenium	0.3600	U		P
Silver	0.0900	U		P
Strontium	2.0952	B	*	P
Thallium	0.5676	B		P
Titanium	0.0600	U		P
Vanadium	0.2400	U		P
Zinc	5.0601	B	*	P

Color Before: White Clarity Before: Cloudy

Color After: Colorless Clarity After: Clear

Texture:

Artifacts: Fine mesh brown solids left on TCLP Filter.

Comments: Sample = 100 % solids. Pressure filtration of the TCLP solids extract through a standard TCLP pressure filtration unit, containing a 0.7 micron borosilicate glass fiber filter, was performed to obtain the TCLP final sample extract.

175

FORM 1A-1

INORGANIC ANALYSIS DATA SHEET

Lab Name: Building 559 PA Inorganic Laboratories Sample No.: 2

Lab Sample ID: X-98A2065-001 D Bldg 779 Solid Paint Sample Lab Duplicate

Section: ICPAES

Lab Sample I.D.s beginning with X' indicates TCLP Extract.

% Solids for Sample : 100.0000

Date Sampled: 5/13/98 SDG No. : MAY23

Lab Receipt Date: 5/13/98 QC Report No.: SD052398.RPT

Matrix: Water ___ Soil ___ Sludge ___ Other X

Elements Identified and Measured

Concentration Units: mg/L

Analyte	Concentration	C	Q	M
Aluminum	2.3262	B		P
Antimony	0.3000	U		P
Arsenic	0.3000	U		P
Barium	0.1500	U		P
Beryllium	0.0150	U		P
Cadmium	0.0600	U		P
Calcium	199.3578	B		P
Chromium	0.1500	U		P
Cobalt	0.2361	B		P
Copper	0.3000	U		P
Iron	0.6000	U		P
Lead	1.1274	B		P
Magnesium	15.0210	B		P
Manganese	0.3924	B		P
Molybdenum	0.1500	U		P
Nickel	0.1500	U		P
Phosphorus	2.2614	B		P
Selenium	0.3600	U		P
Silver	0.0900	U		P
Strontium	0.5085	B		P
Thallium	0.3000	U		P
Titanium	0.0600	U		P
Vanadium	0.2400	U		P
Zinc	3.8286	B		P

Color Before: White Clarity Before: Cloudy

Color After: Colorless Clarity After: Clear

Texture:

Artifacts: Fine mesh brown solids left on TCLP Filter.

Comments: Sample = 100 % solids. Pressure filtration of the TCLP solids extract through a standard TCLP pressure filtration unit, containing a 0.7 micron borosilicate glass fiber filter, was performed to obtain the TCLP final sample extract.

176

FORM 1A-1

INORGANIC ANALYSIS DATA SHEET

Lab Name: Building 559 PA Inorganic Laboratories Sample No.: 3

Lab Sample ID: X-98A2065-002 Bldg 779 Solid Paint Sample

Section: ICPAES

Lab Sample I.D.s beginning with 'X' indicates TCLP Extract.

% Solids for Sample : 100.0000

Date Sampled: 5/13/98 SDG No. : MAY23

Lab Receipt Date: 5/13/98 QC Report No.: SD052398.RPT

Matrix: Water ____ Soil ____ Sludge ____ Other X

Elements Identified and Measured

Concentration Units: mg/L

Analyte	Concentration	C	N V E O O S + Q	M
Aluminum	0.9000	U		P
Antimony	0.3000	U		P
Arsenic	0.3000	U		P
Barium	0.1668	B		P
Beryllium	0.0150	U		P
Cadmium	0.0600	U		P
Calcium	75.9915	B	*	P
Chromium	0.1500	U		P
Cobalt	0.5124	B		P
Copper	0.3000	U		P
Iron	10.3944	B		P
Lead	1.2807	B		P
Magnesium	1.1388	B	*	P
Manganese	0.1668	B		P
Molybdenum	0.1500	U		P
Nickel	0.1506	B		P
Phosphorus	13.2777	B		P
Selenium	0.3600	U		P
Silver	0.0900	U		P
Strontium	0.0765	B	*	P
Thallium	0.3000	U		P
Titanium	0.1422	B		P
Vanadium	0.2400	U		P
Zinc	20.4891	B	*	P

Color Before: Pink Clarity Before: Cloudy

Color After: Colorless Clarity After: Clear

Texture:

Artifacts: Fine mesh orange solids left on TCLP Filter.

Comments: Sample = 100 % solids. Pressure filtration of the TCLP solids extract through a standard TCLP pressure filtration unit, containing a 0.7 micron borosilicate glass fiber filter, was performed to obtain the TCLP final sample extract.

177

FORM 1A-1

INORGANIC ANALYSIS DATA SHEET

Lab Name: Building 559 PA Inorganic Laboratories Sample No.: 4

Lab Sample ID: X-98A2065-003 Bldg 779 Solid Paint Sample

Section: ICPAES

Lab Sample I.D.s beginning with X' indicates TCLP Extract.

% Solids for Sample : 100.0000

Date Sampled: 5/13/98 SDG No. : MAY23

Lab Receipt Date: 5/13/98 QC Report No.: SD052398.RPT

Matrix: Water ____ Soil ____ Sludge ____ Other X

Elements Identified and Measured

Concentration Units: mg/L

Analyte	Concentration	C	Q (N V E O O S +)	M
Aluminum	0.9000	U		P
Antimony	0.3000	U		P
Arsenic	0.3000	U		P
Barium	0.1866	B		P
Beryllium	0.0150	U		P
Cadmium	0.0600	U		P
Calcium	143.2281	B	*	P
Chromium	0.1500	U		P
Cobalt	0.4290	B		P
Copper	0.3000	U		P
Iron	0.6000	U		P
Lead	0.3114	B		P
Magnesium	4.2294	B	*	P
Manganese	0.3033	B		P
Molybdenum	0.1500	U		P
Nickel	0.1500	U		P
Phosphorus	7.1619	B		P
Selenium	0.3600	U		P
Silver	0.0900	U		P
Strontium	0.1260	B	*	P
Thallium	0.3000	U		P
Titanium	0.0600	U		P
Vanadium	0.2400	U		P
Zinc	6.0285	B	*	P

Color Before: White Clarity Before: Cloudy

Color After: Colorless Clarity After: Clear

Texture:

Artifacts: Fine mesh white solids left on TCLP Filter.

Comments: Sample = 100 % solids. Pressure filtration of the TCLP solids extract through a standard TCLP pressure filtration unit, containing a 0.7 micron borosilicate glass fiber filter, was performed to obtain the TCLP final sample extract.

178

FORM 1A-1

INORGANIC ANALYSIS DATA SHEET

Lab Name: Building 559 PA Inorganic Laboratories Sample No.: 5

Lab Sample ID: X-98A2065-004 Bldg 779 Solid Paint Sample

Section: ICPAES

Lab Sample I.D.s beginning with X' indicates TCLP Extract.

% Solids for Sample : 100.0000

Date Sampled: 5/13/98 SDG No. : MAY23

Lab Receipt Date: 5/13/98 QC Report No.: SD052398.RPT

Matrix:
Water
Soil
Sludge
Other X

Elements Identified and Measured

Concentration Units: mg/L

Analyte	Concentration	C	N V * E O O S + Q	M
Aluminum	0.9000	U		P
Antimony	0.3000	U		P
Arsenic	0.3000	U		P
Barium	0.1500	U		P
Beryllium	0.0150	U		P
Cadmium	0.0600	U		P
Calcium	430.7598	B	*	P
Chromium	0.1500	U		P
Cobalt	0.2739	B		P
Copper	0.3000	U		P
Iron	0.6000	U		P
Lead	0.3093	B		P
Magnesium	4.3296	B	*	P
Manganese	0.2676	B		P
Molybdenum	0.1500	U		P
Nickel	0.1500	U		P
Phosphorus	10.9200	B		P
Selenium	0.3600	U		P
Silver	0.0900	U		P
Strontium	0.4191	B	*	P
Thallium	0.3000	U		P
Titanium	1.5666	B		P
Vanadium	0.2400	U		P
Zinc	15.1728	B	*	P

Color Before: White Clarity Before: Cloudy

Color After: Colorless Clarity After: Clear

Texture:

Artifacts: Fine mesh white solids left on TCLP Filter.

Comments: Sample = 100 % solids. Pressure filtration of the TCLP solids extract through a standard TCLP pressure filtration unit, containing a 0.7 micron borosilicate glass fiber filter, was performed to obtain the TCLP final sample extract.

179

FORM 1A-1

INORGANIC ANALYSIS DATA SHEET

Lab Name: Building 559 PA Inorganic Laboratories Sample No.: 6

Lab Sample ID: X-98A2065-005 Bldg 779 Solid Paint Sample

Section: ICPAES

Lab Sample I.D.s beginning with 'X' indicates TCLP Extract.

% Solids for Sample : 100.0000

Date Sampled: 5/13/98 SDG No. : MAY23

Lab Receipt Date: 5/13/98 QC Report No.: SD052398.RPT

Matrix: Water ____ Soil ____ Sludge ____ Other X

Elements Identified and Measured

Concentration Units: mg/L

Analyte	Concentration	C	Q (N V * E O O S +)	M
Aluminum	1.2375	B		P
Antimony	0.3000	U		P
Arsenic	0.3000	U		P
Barium	0.1500	U		P
Beryllium	0.0150	U		P
Cadmium	0.0600	U		P
Calcium	375.5454	B	*	P
Chromium	0.1500	U		P
Cobalt	0.4926	B		P
Copper	0.3000	U		P
Iron	0.6000	U		P
Lead	0.3501	B		P
Magnesium	4.0941	B	*	P
Manganese	0.3376	B		P
Molybdenum	0.1500	U		P
Nickel	0.1500	U		P
Phosphorus	22.8552	B		P
Selenium	0.3600	U		P
Silver	0.0900	U		P
Strontium	0.2376	B	*	P
Thallium	0.3000	U		P
Titanium	0.9006	B		P
Vanadium	0.2400	U		P
Zinc	34.3791	B	*	P

Color Before: White Clarity Before: Cloudy

Color After: Colorless Clarity After: Clear

Texture:

Artifacts: Fine mesh yellow solids left on TCLP Filter.

Comments: Sample = 100 % solids. Pressure filtration of the TCLP solids extract through a standard TCLP pressure filtration unit, containing a 0.7 micron borosilicate glass fiber filter, was performed to obtain the TCLP final sample extract.

180

FORM 1A-1

INORGANIC ANALYSIS DATA SHEET

Lab Name: Building 559 PA Inorganic Laboratories Sample No.: 7

Lab Sample ID: X-98A2065-006 Bldg 779 Solid Paint Sample

Section: ICPAES

Lab Sample I.D.s beginning with 'X' indicates TCLP Extract.

% Solids for Sample : 100.0000

Date Sampled: 6/13/98 SDG No. : MAY23

Lab Receipt Date: 5/13/98 QC Report No.: SD052398.RPT

Matrix: Water ____ Soil ____ Sludge ____ Other X

Elements Identified and Measured

Concentration Units: mg/L

Analyte	Concentration	C	Q (N V * E O O S +)	M
Aluminum	0.9000	U		P
Antimony	0.3000	U		P
Arsenic	0.3000	U		P
Barium	0.1500	U		P
Beryllium	0.0150	U		P
Cadmium	0.0600	U		P
Calcium	315.1404	B	*	P
Chromium	0.1500	U		P
Cobalt	0.4884	B		P
Copper	0.3000	U		P
Iron	0.6000	U		P
Lead	0.3192	B		P
Magnesium	3.3111	B	*	P
Manganese	0.2601	B		P
Molybdenum	0.1500	U		P
Nickel	0.1500	U		P
Phosphorus	23.9280	B		P
Selenium	0.3600	U		P
Silver	0.0900	U		P
Strontium	0.2001	B	*	P
Thallium	0.3000	U		P
Titanium	0.0600	U		P
Vanadium	0.2400	U		P
Zinc	37.8735	B	*	P

Color Before: White Clarity Before: Cloudy

Color After: Colorless Clarity After: Clear

Texture:

Artifacts: Fine mesh white solids left on TCLP Filter.

Comments: Sample = 100 % solids. Pressure filtration of the TCLP solids extract through a standard TCLP pressure filtration unit, containing a 0.7 micron borosilicate glass fiber filter, was performed to obtain the TCLP final sample extract.

181

FORM 1A-1

INORGANIC ANALYSIS DATA SHEET

Lab Name: Building 559 PA Inorganic Laboratories Sample No.: 1

Lab Sample ID: X-98A2065-007 Bldg 779 Solid Paint Sample

Section: ICPAES

Lab Sample I.D.s beginning with X' indicates TCLP Extract.

% Solids for Sample : 100.0000

Date Sampled: 5/13/98 SDG No. : MAY25

Lab Receipt Date: 5/13/98 QC Report No.: SD052598.RPT

Matrix: Water ____ Soil ____ Sludge ____ Other X

Elements Identified and Measured

Concentration Units: mg/L

Analyte	Concentration	C	Q (N V * E O O S +)	M
Aluminum	0.9000	U		P
Antimony	0.3000	U		P
Arsenic	0.3000	U		P
Barium	0.1500	U		P
Beryllium	0.0150	U		P
Cadmium	0.0600	U		P
Calcium	269.7147	B	*	P
Chromium	0.1500	U		P
Cobalt	0.3501	B		P
Copper	0.3000	U		P
Iron	0.6000	U		P
Lead	0.2400	U		P
Magnesium	3.0111	B		P
Manganese	0.2322	B		P
Molybdenum	0.1500	U		P
Nickel	0.1500	U		P
Phosphorus	16.4790	B		P
Selenium	0.3600	U		P
Silver	0.0900	U		P
Strontium	0.1875	B	*	P
Thallium	0.3000	U		P
Titanium	0.4491	B		P
Vanadium	0.2400	U		P
Zinc	23.1210	B		P

Color Before: White Clarity Before: Cloudy

Color After: Colorless Clarity After: Clear

Texture:

Artifacts: Fine mesh yellow solids left on TCLP Filter.

Comments: Sample = 100 % solids. Pressure filtration of the TCLP solids extract through a standard TCLP pressure filtration unit, containing a 0.7 micron borosilicate glass fiber filter, was performed to obtain the TCLP final sample extract.

182

FORM 1A-1

INORGANIC ANALYSIS DATA SHEET

Lab Name: Building 559 PA Inorganic Laboratories Sample No.: 8

Lab Sample ID: X-98A2065-008 Bldg 779 Solid Paint Sample

Section: ICPAES

Lab Sample I.D.s beginning with 'X' indicates TCLP Extract.

% Solids for Sample : 100.0000

Date Sampled: 5/13/98 SDG No. : MAY23

Lab Receipt Date: 5/13/98 QC Report No.: SD052398.RPT

Matrix: Water ____ Soil ____ Sludge ____ Other X

Elements Identified and Measured

Concentration Units: mg/L

Analyte	Concentration	C	Q (N V * E O O S +)	M
Aluminum	1.4994	B		P
Antimony	0.3000	U		P
Arsenic	0.3000	U		P
Barium	0.1500	U		P
Beryllium	0.0150	U		P
Cadmium	0.0600	U		P
Calcium	372.2829	B	*	P
Chromium	0.1500	U		P
Cobalt	0.4275	B		P
Copper	0.3000	U		P
Iron	0.6000	U		P
Lead	0.3312	B		P
Magnesium	4.0860	B	*	P
Manganese	0.2962	B		P
Molybdenum	0.1500	U		P
Nickel	0.1500	U		P
Phosphorus	19.6062	B		P
Selenium	0.3600	U		P
Silver	0.0900	U		P
Strontium	0.2445	B	*	P
Thallium	0.3000	U		P
Titanium	1.1673	B		P
Vanadium	0.2400	U		P
Zinc	29.1045	B	*	P

Color Before: White Clarity Before: Cloudy

Color After: Colorless Clarity After: Clear

Texture:

Artifacts: Fine mesh blue solids left on TCLP Filter.

Comments: Sample = 100 % solids. Pressure filtration of the TCLP solids extract through a standard TCLP pressure filtration unit, containing a 0.7 micron borosilicate glass fiber filter was performed to obtain the TCLP final sample extract.

183

FORM 1A-1

INORGANIC ANALYSIS DATA SHEET

Lab Name: Building 559 PA Inorganic Laboratories Sample No.: 9

Lab Sample ID: X-98A2065-009 Bldg 779 Solid Paint Sample

Section: ICPAES

Lab Sample I.D.s beginning with X' indicates TCLP Extract.

% Solids for Sample : 100.0000

Date Sampled: 5/13/98 SDG No. : MAY23

Lab Receipt Date: 5/13/98 QC Report No.: SD052398.RPT

Matrix: Water ____ Soil ____ Sludge ____ Other X

Elements Identified and Measured

Concentration Units: mg/L

Analyte	Concentration	C	N V * E O O S ~+ Q	M
Aluminum	0.9000	U		P
Antimony	0.3000	U		P
Arsenic	0.3000	U		P
Barium	0.1584	B		P
Beryllium	0.0150	U		P
Cadmium	0.0600	U		P
Calcium	528.9264	B	*	P
Chromium	0.1500	U		P
Cobalt	0.1500	U		P
Copper	0.3000	U		P
Iron	0.6000	U		P
Lead	0.3024	B		P
Magnesium	5.6970	B	*	P
Manganese	0.3567	B		P
Molybdenum	0.1500	U		P
Nickel	0.1500	U		P
Phosphorus	2.6733	B		P
Selenium	0.3600	U		P
Silver	0.0900	U		P
Strontium	0.3240	B	*	P
Thallium	0.3000	U		P
Titanium	2.7735	B		P
Vanadium	0.2400	U		P
Zinc	2.0754	B	*	P

Color Before: White Clarity Before: Cloudy

Color After: Colorless Clarity After: Clear

Texture:

Artifacts: Fine mesh white solids left on TCLP Filter.

Comments: Sample = 100 % solids. Pressure filtration of the TCLP solids extract through a standard TCLP pressure filtration unit, containing a 0.7 micron borosilicate glass fiber filter, was performed to obtain the TCLP final sample extract.

184

FORM 1A-1

INORGANIC ANALYSIS DATA SHEET

Lab Name: Building 559 PA Inorganic Laboratories Sample No.: 10

Lab Sample ID: X-98A2065-010 Bldg 779 Solid Paint Sample

Section: ICPAES

Lab Sample I.D.s beginning with X' indicates TCLP Extract.

% Solids for Sample : 100.0000

Date Sampled: 5/13/98 SDG No. : MAY23

Lab Receipt Date: 5/13/98 QC Report No.: SD052398.RPT

Matrix: Water ____ Soil ____ Sludge ____ Other X

Elements Identified and Measured

Concentration Units: mg/L

Analyte	Concentration	C	Q	M
Aluminum	1.2660	B		P
Antimony	0.3000	U		P
Arsenic	0.3000	U		P
Barium	0.1509	B		P
Beryllium	0.0150	U		P
Cadmium	0.0600	U		P
Calcium	297.5400	B	*	P
Chromium	0.1500	U		P
Cobalt	0.1905	B		P
Copper	0.3000	U		P
Iron	1.6692	B		P
Lead	0.3627	B		P
Magnesium	3.4440	B	*	P
Manganese	0.2979	B		P
Molybdenum	0.1500	U		P
Nickel	0.1500	U		P
Phosphorus	2.9499	B		P
Selenium	0.4578	B		P
Silver	0.0900	U		P
Strontium	0.2484	B	*	P
Thallium	0.3000	U		P
Titanium	0.5985	B		P
Vanadium	0.2400	U		P
Zinc	2.7726	B	*	P

Color Before: White Clarity Before: Cloudy

Color After: Colorless Clarity After: Clear

Texture:

Artifacts: Fine mesh yellow solids left on TCLP Filter.

Comments: Sample = 100 % solids. Pressure filtration of the TCLP solids extract through a standard TCLP pressure filtration unit, containing a 0.7 micron borosilicate glass fiber filter, was performed to obtain the TCLP final sample extract.

185

FORM 1A-1

INORGANIC ANALYSIS DATA SHEET

Lab Name: Building 559 PA Inorganic Laboratories Sample No.: 11

Lab Sample ID: X-98A2065-011 Bldg 779 Solid Paint Sample

Section: ICPAES

Lab Sample I.D.s beginning with X' indicates TCLP Extract.

% Solids for Sample : 100.0000

Date Sampled: 5/13/98 SDG No. : MAY23

Lab Receipt Date: 5/13/98 QC Report No.: SD052398.RPT

Matrix: Water ____ Soil ____ Sludge ____ Other X

Elements Identified and Measured

Concentration Units: mg/L

Analyte	Concentration	C	N V E O O S + Q	M
Aluminum	0.9000	U		P
Antimony	0.3000	U		P
Arsenic	0.3000	U		P
Barium	0.1500	U		P
Beryllium	0.0150	U		P
Cadmium	0.0600	U		P
Calcium	735.1308	B	*	P
Chromium	0.1500	U		P
Cobalt	0.6006	B		P
Copper	0.3000	U		P
Iron	0.6000	U		P
Lead	3.3189	B		P
Magnesium	7.5087	B	*	P
Manganese	0.7035	B		P
Molybdenum	0.1500	U		P
Nickel	0.1500	U		P
Phosphorus	5.7267	B		P
Selenium	0.3933	B		P
Silver	0.0900	U		P
Strontium	1.4949	B	*	P
Thallium	0.3000	U		P
Titanium	0.0600	U		P
Vanadium	0.2400	U		P
Zinc	7.3560	B	*	P

Color Before: White Clarity Before: Cloudy

Color After: Colorless Clarity After: Clear

Texture:

Artifacts: Fine mesh white solids left on TCLP Filter.

Comments: Sample = 100 % solids. Pressure filtration of the TCLP solids extract through a standard TCLP pressure filtration unit, containing a 0.7 micron borosilicate glass fiber filter, was performed to obtain the TCLP final sample extract.

186

FORM 1A-1

INORGANIC ANALYSIS DATA SHEET

Lab Name: Building 559 PA Inorganic Laboratories Sample No.: 12

Lab Sample ID: X-98A2065-012 Bldg 779 Solid Paint Sample

Section: ICPAES

Lab Sample I.D.s beginning with 'X' indicates TCLP Extract

% Solids for Sample : 100.0000

Date Sampled: 5/13/98 SDG No. : MAY23

Lab Receipt Date: 5/13/98 QC Report No.: SD052398.RPT

Matrix: Water ____ Soil ____ Sludge ____ Other X

Elements Identified and Measured

Concentration Units: mg/L

Analyte	Concentration	C	N V * E O O S -+ Q	M
Aluminum	3.0406	B		P
Antimony	0.3000	U		P
Arsenic	0.3000	U		P
Barium	0.1500	U		P
Beryllium	0.0150	U		P
Cadmium	0.0600	U		P
Calcium	322.4313	B	*	P
Chromium	0.1500	U		P
Cobalt	3.4104	B		P
Copper	0.3000	U		P
Iron	0.6000	U		P
Lead	0.2400	U		P
Magnesium	17.2047	B	*	P
Manganese	1.3917	B		P
Molybdenum	0.1500	U		P
Nickel	0.1500	U		P
Phosphorus	2.5350	B		P
Selenium	0.3600	U		P
Silver	0.0900	U		P
Strontium	2.2371	B	*	P
Thallium	0.3000	U		P
Titanium	0.0600	U		P
Vanadium	0.2400	U		P
Zinc	1.2807	B	*	P

Color Before: Colorless Clarity Before: Cloudy

Color After: Colorless Clarity After: Clear

Texture:

Artifacts: Fine mesh gray solids left on TCLP Filter.

Comments: Sample = 100 % solids. Pressure filtration of the TCLP solids extract through a standard TCLP pressure filtration unit, containing a 0.7 micron borosilicate glass fiber filter, was performed to obtain the TCLP final sample extract.

187

FORM 1A-1

INORGANIC ANALYSIS DATA SHEET

Lab Name: Building 559 PA Inorganic Laboratories Sample No.: 1

Lab Sample ID: X-98A2065-013 Bldg 779 Solid Paint Sample

Section: ICPAES

Lab Sample I.D.s beginning with X' indicates TCLP Extract.

% Solids for Sample : 100.0000

Date Sampled: 5/13/98 SDG No. : MAY20

Lab Receipt Date: 5/13/98 QC Report No.: SD052098.RPT

Matrix: Water
Soil
Sludge
Other X

Elements Identified and Measured

Concentration Units: mg/L

Analyte	Concentration	C	Q	M
Aluminum	0.9000	U		P
Antimony	0.3000	U		P
Arsenic	0.3000	U		P
Barium	0.2982	B		P
Beryllium	0.0150	U		P
Cadmium	0.0600	U		P
Calcium	784.9932	B		P
Chromium	0.1500	U		P
Cobalt	0.1500	U		P
Copper	0.3000	U		P
Iron	0.6000	U		P
Lead	0.3912	B		P
Magnesium	9.4527	B		P
Manganese	0.0711	B		P
Molybdenum	0.1500	U		P
Nickel	0.3732	B		P
Phosphorus	1.5000	U		P
Selenium	0.3600	U		P
Silver	0.0900	U		P
Strontium	1.0884	B		P
Thallium	0.3000	U		P
Titanium	0.0600	U		P
Vanadium	0.2400	U		P
Zinc	0.3000	U		P

Color Before: Brown Clarity Before: Cloudy

Color After: Colorless Clarity After: Clear

Texture:

Artifacts: Fine mesh brown solids left on TCLP Filter.

Comments: Sample = 100 % solids. Pressure filtration of the TCLP solids extract through a standard TCLP pressure filtration unit, containing a 0.7 micron borosilicate glass fiber filter was performed to obtain the TCLP final sample extract.

FORM 1A-1

INORGANIC ANALYSIS DATA SHEET

Lab Name: Building 559 PA Inorganic Laboratories Sample No.: 2

Lab Sample ID: X-98A2065-013 D Bldg 779 Solid Paint Sample Lab Duplicate

Section: ICPAES

Lab Sample I.D.s beginning with 'X' indicates TCLP Extract.

% Solids for Sample : 100.0000

Date Sampled: 5/13/98 SDG No. : MAY20

Lab Receipt Date: 5/13/98 QC Report No.: SD052098.RPT

Matrix: Water ___ Soil ___ Sludge ___ Other X

Elements Identified and Measured

Concentration Units: mg/L

Analyte	Concentration	C	Q	M
Aluminum	0.9000	U		P
Antimony	0.3000	U		P
Arsenic	0.3000	U		P
Barium	0.2196	B		P
Beryllium	0.0150	U		P
Cadmium	0.0600	U		P
Calcium	696.6693	B		P
Chromium	0.1500	U		P
Cobalt	0.1500	U		P
Copper	0.3000	U		P
Iron	0.6000	U		P
Lead	0.4155	B		P
Magnesium	7.7421	B		P
Manganese	0.0300	U		P
Molybdenum	0.1500	U		P
Nickel	0.1500	U		P
Phosphorus	1.5000	U		P
Selenium	0.3600	U		P
Silver	0.0900	U		P
Strontium	0.9918	B		P
Thallium	0.3000	U		P
Titanium	0.0600	U		P
Vanadium	0.2400	U		P
Zinc	0.3000	U		P

Color Before: Brown Clarity Before: Cloudy

Color After: Colorless Clarity After: Clear

Texture:

Artifacts: Fine mesh brown solids left on TCLP Filter.

Comments: Sample = 100 % solids. Pressure filtration of the TCLP solids extract through a standard TCLP pressure filtration unit, containing a 0.7 micron borosilicate glass fiber filter, was performed to obtain the TCLP final sample extract.

89

FORM 1A-1

INORGANIC ANALYSIS DATA SHEET

Lab Name: Building 559 PA Inorganic Laboratories Sample No.: 13

Lab Sample ID: X-98A2065-014 Bldg 779 Solid Paint Sample

Section: ICPAES

Lab Sample I.D.s beginning with 'X' indicates TCLP Extract.

% Solids for Sample : 100.0000

Date Sampled: 6/13/98 SDG No. : MAY23

Lab Receipt Date: 6/13/98 QC Report No.: SD052398.RPT

Matrix: Water ____ Soil ____ Sludge ____ Other X

Elements Identified and Measured

Concentration Units: mg/L

Analyte	Concentration	C	Q	M
Aluminum	0.9000	U		P
Antimony	0.3000	U		P
Arsenic	0.3000	U		P
Barium	0.1500	U		P
Beryllium	0.0150	U		P
Cadmium	0.0600	U		P
Calcium	736.4106	B	*	P
Chromium	0.1500	U		P
Cobalt	0.2616	B		P
Copper	0.3000	U		P
Iron	0.6000	U		P
Lead	0.3003	B		P
Magnesium	260.3304	B	*	P
Manganese	0.3513	B		P
Molybdenum	0.1500	U		P
Nickel	0.5751	B		P
Phosphorus	1.5000	U		P
Selenium	0.3600	U		P
Silver	0.0900	U		P
Strontium	1.3734	B	*	P
Thallium	0.3000	U		P
Titanium	0.1266	B		P
Vanadium	0.2400	U		P
Zinc	0.3564	B	*	P

Color Before: Orange Clarity Before: Cloudy

Color After: Colorless Clarity After: Clear

Texture:

Artifacts: Fine mesh orange solids left on TCLP Filter.

Comments: Sample = 100 % solids. Pressure filtration of the TCLP solids extract through a standard TCLP pressure filtration unit, containing a 0.7 micron borosilicate glass fiber filter, was performed to obtain the TCLP final sample extract.

190

FORM 1A-1

INORGANIC ANALYSIS DATA SHEET

Lab Name: Building 559 PA Inorganic Laboratories Sample No.: 14

Lab Sample ID: X-98A2065-015 Bldg 779 Solid Paint Sample

Section: ICPAES

Lab Sample I.D.s beginning with X' indicates TCLP Extract.

% Solids for Sample : 100.0000

Date Sampled: 5/13/98 SDG No. : MAY23

Lab Receipt Date: 5/13/98 QC Report No.: SD052398.RPT

Matrix: Water ____ Soil ____ Sludge ____ Other X

Elements Identified and Measured

Concentration Units: mg/L

Analyte	Concentration	C	Q	M
Aluminum	0.9000	U		P
Antimony	0.3000	U		P
Arsenic	0.3000	U		P
Barium	0.1500	U		P
Beryllium	0.0150	U		P
Cadmium	0.0600	U		P
Calcium	1354.0797	B	*	P
Chromium	0.1500	U		P
Cobalt	0.1500	U		P
Copper	0.3000	U		P
Iron	0.6000	U		P
Lead	0.3648	B		P
Magnesium	69.1389	B	*	P
Manganese	0.0300	U		P
Molybdenum	0.1500	U		P
Nickel	0.1500	U		P
Phosphorus	1.5000	U		P
Selenium	0.3600	U		P
Silver	0.0900	U		P
Strontium	6.5487	B	*	P
Thallium	0.3000	U		P
Titanium	0.0600	U		P
Vanadium	0.2400	U		P
Zinc	0.3000	U	*	P

Color Before: White Clarity Before: Cloudy

Color After: Colorless Clarity After: Clear

Texture:

Artifacts: Fine mesh white solids left on TCLP Filter.

Comments: Sample = 100 % solids. Pressure filtration of the TCLP solids extract through a standard TCLP pressure filtration unit, containing a 0.7 micron borosilicate glass fiber filter, was performed to obtain the TCLP final sample extract.

FORM 1A-1

INORGANIC ANALYSIS DATA SHEET

Lab Name: Building 559 PA Inorganic Laboratories Sample No.: 3

Lab Sample ID: X-98A2065-016 Bldg 779 Solid Paint Sample

Section: ICPAES

Lab Sample I.D.s beginning with 'X' indicates TCLP Extract

% Solids for Sample : 100.0000

Date Sampled: 6/13/98 SDG No. : MAY20

Lab Receipt Date: 5/13/98 QC Report No.: SD052098.RPT

Matrix: Water ____ Soil ____ Sludge ____ Other X

Elements Identified and Measured

Concentration Units: mg/L

Analyte	Concentration	C	Q	M
Aluminum	0.9000	U		P
Antimony	0.3000	U		P
Arsenic	0.3000	U		P
Barium	0.2202	B		P
Beryllium	0.0150	U		P
Cadmium	0.0600	U		P
Calcium	741.7095	B		P
Chromium	0.1500	U		P
Cobalt	0.1500	U		P
Copper	0.3000	U		P
Iron	0.6000	U		P
Lead	0.4488	B		P
Magnesium	8.2200	B		P
Manganese	0.0300	U		P
Molybdenum	0.1500	U		P
Nickel	0.1500	U		P
Phosphorus	1.5000	U		P
Selenium	0.3600	U		P
Silver	0.0900	U		P
Strontium	0.9084	B		P
Thallium	0.3000	U		P
Titanium	0.0600	U		P
Vanadium	0.2400	U		P
Zinc	0.3000	U		P

Color Before: Yellow Clarity Before: Cloudy

Color After: Colorless Clarity After: Clear

Texture:

Artifacts: Fine mesh yellow solids left on TCLP Filter.

Comments: Sample = 100 % solids. Pressure filtration of the TCLP solids extract through a standard TCLP pressure filtration unit, containing a 0.7 micron borosilicate glass fiber filter, was performed to obtain the TCLP final sample extract.

192

FORM 1A-1

INORGANIC ANALYSIS DATA SHEET

Lab Name: Building 559 PA Inorganic Laboratories Sample No.: 2

Lab Sample ID: X-98A2065-017 Bldg 779 Solid Paint Sample

Section: ICPAES

Lab Sample I.D.s beginning with X' indicates TCLP Extract.

% Solids for Sample : 100.0000

Date Sampled: 5/13/98 SDG No. : MAY25

Lab Receipt Date: 5/13/98 QC Report No.: SD052598.RPT

Matrix:
Water
Soil
Sludge
Other X

Elements Identified and Measured

Concentration Units: mg/L

Analyte	Concentration	C	Q	M
Aluminum	0.9000	U		P
Antimony	0.3429	B		P
Arsenic	0.3000	U		P
Barium	0.1500	U		P
Beryllium	0.0150	U		P
Cadmium	0.0600	U		P
Calcium	1035.3561	B		P
Chromium	0.2949	B		P
Cobalt	0.1500	U		P
Copper	0.3000	U		P
Iron	0.6000	U		P
Lead	0.2400	U		P
Magnesium	159.9711	B		P
Manganese	0.0300	U		P
Molybdenum	0.1500	U		P
Nickel	0.1500	U		P
Phosphorus	1.5000	U		P
Selenium	0.3600	U		P
Silver	0.0900	U		P
Strontium	4.8177	B		P
Thallium	0.3000	U		P
Titanium	0.0600	U		P
Vanadium	0.2400	U		P
Zinc	0.3000	U		P

Color Before: White Clarity Before: Cloudy

Color After: Colorless Clarity After: Clear

Texture:

Artifacts: Fine mesh yellow solids left on TCLP Filter.

Comments: Sample = 100 % solids. Pressure filtration of the TCLP solids extract through a standard TCLP pressure filtration unit, containing a 0.7 micron borosilicate glass fiber filte to obtain the TCLP final sample extract.

193

FORM 1A-1

INORGANIC ANALYSIS DATA SHEET

Lab Name: Building 559 PA Inorganic Laboratories Sample No.: 3

Lab Sample ID: X-98A2065-017 D Bldg 779 Solid Paint Sample Lab Duplicate

Section: ICPAES

Lab Sample I.D.s beginning with 'X' indicates TCLP Extract.

% Solids for Sample : 100.0000

Date Sampled: 5/13/98 SDG No.: MAY25

Lab Receipt Date: 5/13/98 QC Report No.: SD052598.RPT

Matrix: Water ___ Soil ___ Sludge ___ Other X

Elements Identified and Measured

Concentration Units: mg/L

Analyte	Concentration	C	Q (N V * E O O S +)	M
Aluminum	0.9000	U		P
Antimony	0.3000	U		P
Arsenic	0.3000	U		P
Barium	0.1500	U		P
Beryllium	0.0150	U		P
Cadmium	0.0600	U		P
Calcium	756.2793	B		P
Chromium	0.1500	U		P
Cobalt	0.1902	B		P
Copper	0.3000	U		P
Iron	0.6000	U		P
Lead	0.2400	U		P
Magnesium	146.6493	B		P
Manganese	0.3368	B		P
Molybdenum	0.1500	U		P
Nickel	0.1500	U		P
Phosphorus	1.5000	U		P
Selenium	0.3600	U		P
Silver	0.0900	U		P
Strontium	2.1561	B		P
Thallium	0.3000	U		P
Titanium	0.0600	U		P
Vanadium	0.2400	U		P
Zinc	1.4304	B		P

Color Before: White Clarity Before: Cloudy

Color After: Colorless Clarity After: Clear

Texture:

Artifacts: Fine mesh yellow solids left on TCLP Filter.

Comments: Sample = 100 % solids. Pressure filtration of the TCLP solids extract through a standard TCLP pressure filtration unit, containing a 0.7 micron borosilicate glass fiber filter, was performed to obtain the TCLP final sample extract.

194

FORM 1A-1

INORGANIC ANALYSIS DATA SHEET

Lab Name: Building 559 PA Inorganic Laboratories Sample No.: 4

Lab Sample ID: X-98A2065-018 Bldg 779 Solid Paint Sample

Section: ICPAES

Lab Sample I.D.s beginning with X' indicates TCLP Extract.

% Solids for Sample : 100.0000

Date Sampled: 5/13/98 SDG No. : MAY20

Lab Receipt Date: 5/13/98 QC Report No.: SD052098.RPT

Matrix: Water
Soil
Sludge
Other X

Elements Identified and Measured

Concentration Units: mg/L

Analyte	Concentration	C	Q (N V * E O O S +)	M
Aluminum	0.9000	U		P
Antimony	0.3000	U		P
Arsenic	0.3000	U		P
Barium	0.1500	U		P
Beryllium	0.0150	U		P
Cadmium	0.0600	U		P
Calcium	820.1058	B		P
Chromium	0.1500	U		P
Cobalt	0.1500	U		P
Copper	0.3000	U		P
Iron	0.6000	U		P
Lead	0.4881	B		P
Magnesium	0.6000	U		P
Manganese	0.0300	U		P
Molybdenum	0.1500	U		P
Nickel	0.1500	U		P
Phosphorus	1.5000	U		P
Selenium	0.3600	U		P
Silver	0.0900	U		P
Strontium	0.9408	B		P
Thallium	0.3000	U		P
Titanium	0.0600	U		P
Vanadium	0.2400	U		P
Zinc	0.3000	U		P

Color Before: Brown Clarity Before: Cloudy

Color After: Colorless Clarity After: Clear

Texture:

Artifacts: Fine mesh brown solids left on TCLP Filter.

Comments: Sample = 100 % solids. Pressure filtration of the TCLP solids extract through a standard TCLP pressure filtration unit, containing a 0.7 micron borosilicate glass fiber filter, was performed to obtain the TCLP final sample extract.

195

FORM 1A-1

INORGANIC ANALYSIS DATA SHEET

Lab Name: Building 559 PA Inorganic Laboratories Sample No.: 5

Lab Sample ID: X-98A2065-019 Bldg 779 Solid Paint Sample

Section: ICPAES

Lab Sample I.D.s beginning with X' indicates TCLP Extract.

% Solids for Sample : 100.0000

Date Sampled: 5/13/98 SDG No. : MAY20

Lab Receipt Date: 5/13/98 QC Report No.: SD052098.RPT

Matrix: Water ____ Soil ____ Sludge ____ Other X

Elements Identified and Measured

Concentration Units: mg/L

Analyte	Concentration	C	Q (N V * E O O S +)	M
Aluminum	0.9000	U		P
Antimony	0.3000	U		P
Arsenic	0.3000	U		P
Barium	0.1536	B		P
Beryllium	0.0150	U		P
Cadmium	0.0600	U		P
Calcium	706.0068	B		P
Chromium	0.1500	U		P
Cobalt	0.1500	U		P
Copper	0.3000	U		P
Iron	0.6000	U		P
Lead	0.6177	B		P
Magnesium	6.2292	B		P
Manganese	0.0300	U		P
Molybdenum	0.1500	U		P
Nickel	0.1500	U		P
Phosphorus	1.5000	U		P
Selenium	0.3600	U		P
Silver	0.0900	U		P
Strontium	0.8277	B		P
Thallium	0.3000	U		P
Titanium	0.0600	U		P
Vanadium	0.2400	U		P
Zinc	0.3000	U		P

Color Before: Blue Clarity Before: Cloudy

Color After: Colorless Clarity After: Clear

Texture:

Artifacts: Fine mesh blue solids left on TCLP Filter.

Comments: Sample = 100 % solids. Pressure filtration of the TCLP solids extract through a standard TCLP pressure filtration unit, containing a 0.7 micron borosilicate glass fiber filter, [illegible] to obtain the TCLP final sample extract.

196

FORM 1A-1

INORGANIC ANALYSIS DATA SHEET

Lab Name: Building 559 PA Inorganic Laboratories Sample No.: 6

Lab Sample ID: X-98A2065-020 Bldg 779 Solid Paint Sample

Section: ICPAES

Lab Sample I.D.s beginning with X' indicates TCLP Extract.

% Solids for Sample : 100.0000

Date Sampled: 5/13/98 SDG No. : MAY20

Lab Receipt Date: 5/13/98 QC Report No.: SD052098.RPT

Matrix: Water ____ Soil ____ Sludge ____ Other X

Elements Identified and Measured

Concentration Units: mg/L

Analyte	Concentration	C	Q (N V * E O O S +)	M
Aluminum	0.9000	U		P
Antimony	0.3000	U		P
Arsenic	0.3000	U		P
Barium	0.1695	B		P
Beryllium	0.0150	U		P
Cadmium	0.0600	U		P
Calcium	795.4176	B		P
Chromium	0.1500	U		P
Cobalt	0.1500	U		P
Copper	0.3000	U		P
Iron	0.6000	U		P
Lead	0.4821	B		P
Magnesium	0.6000	U		P
Manganese	0.0300	U		P
Molybdenum	0.1500	U		P
Nickel	0.1500	U		P
Phosphorus	1.5000	U		P
Selenium	0.3600	U		P
Silver	0.0900	U		P
Strontium	1.0734	B		P
Thallium	0.3000	U		P
Titanium	0.0600	U		P
Vanadium	0.2400	U		P
Zinc	0.3000	U		P

Color Before: Brown Clarity Before: Cloudy

Color After: Colorless Clarity After: Clear

Texture:

Artifacts: Fine mesh brown solids left on TCLP Filter.

Comments: Sample = 100 % solids. Pressure filtration of the TCLP solids extract through a standard TCLP pressure filtration unit, containing a 0.7 micron borosilicate glass fiber filter, to obtain the TCLP final sample extract.

197

FORM 1A-1

INORGANIC ANALYSIS DATA SHEET

Lab Name: Building 559 PA Inorganic Laboratories Sample No.: 7

Lab Sample ID: X-98A2065-021 Bldg 779 Solid Paint Sample

Section: ICPAES

Lab Sample I.D.s beginning with X' indicates TCLP Extract.

% Solids for Sample : 100.0000

Date Sampled: 5/13/98 SDG No. : MAY20

Lab Receipt Date: 5/13/98 QC Report No.: SD052098.RPT

Matrix: Water ____ Soil ____ Sludge ____ Other X

Elements Identified and Measured

Concentration Units: mg/L

Analyte	Concentration	C	Q	M
Aluminum	6.5301	B		P
Antimony	0.3000	U		P
Arsenic	0.3000	U		P
Barium	0.1626	B		P
Beryllium	0.0150	U		P
Cadmium	0.0600	U		P
Calcium	869.7762	B		P
Chromium	0.1500	U		P
Cobalt	0.1500	U		P
Copper	0.3000	U		P
Iron	0.6000	U		P
Lead	0.5004	B		P
Magnesium	0.6000	U		P
Manganese	0.0579	B		P
Molybdenum	0.1500	U		P
Nickel	0.1500	U		P
Phosphorus	1.5000	U		P
Selenium	0.3600	U		P
Silver	0.0900	U		P
Strontium	1.1919	B		P
Thallium	0.3000	U		P
Titanium	0.0600	U		P
Vanadium	0.2400	U		P
Zinc	0.3000	U		P

Color Before: White Clarity Before: Cloudy

Color After: Colorless Clarity After: Clear

Texture:

Artifacts: Fine mesh white solids left on TCLP Filter.

Comments: Sample = 100 % solids. Pressure filtration of the TCLP solids extract through a standard TCLP pressure filtration unit, containing a 0.7 micron borosilicate glass fiber filter, to obtain the TCLP final sample extract.

FORM 1A-1

INORGANIC ANALYSIS DATA SHEET

Lab Name: Building 559 PA Inorganic Laboratories Sample No.: 8

Lab Sample ID: X-98A2065-022 Bldg 779 Solid Paint Sample

Section: ICPAES

Lab Sample I.D.s beginning with 'X' indicates TCLP Extract.

% Solids for Sample : 100.0000

Date Sampled: 5/13/98 SDG No.: MAY20

Lab Receipt Date: 5/13/98 QC Report No.: SD052098.RPT

Matrix: Water ___ Soil ___ Sludge ___ Other X

Elements Identified and Measured

Concentration Units: mg/L

Analyte	Concentration	C	Q	M
Aluminum	0.9000	U		P
Antimony	0.3000	U		P
Arsenic	0.3000	U		P
Barium	0.1500	U		P
Beryllium	0.0150	U		P
Cadmium	0.0600	U		P
Calcium	822.3384	B		P
Chromium	0.1500	U		P
Cobalt	0.1500	U		P
Copper	0.3000	U		P
Iron	0.6000	U		P
Lead	0.4761	B		P
Magnesium	0.8172	B		P
Manganese	0.0300	U		P
Molybdenum	0.1500	U		P
Nickel	0.1500	U		P
Phosphorus	1.5000	U		P
Selenium	0.3600	U		P
Silver	0.0900	U		P
Strontium	1.1091	B		P
Thallium	0.3000	U		P
Titanium	0.0600	U		P
Vanadium	0.2400	U		P
Zinc	0.3000	U		P

Color Before: White Clarity Before: Cloudy

Color After: Yellow Clarity After: Clear

Texture:

Artifacts: Fine mesh white solids left on TCLP Filter.

Comments: Sample = 100 % solids. Pressure filtration of the TCLP solids extract through a standard TCLP pressure filtration unit, containing a 0.7 micron borosilicate glass fiber filter, to obtain the TCLP final sample extract.

FORM 1A-1

INORGANIC ANALYSIS DATA SHEET

Lab Name: Building 559 PA Inorganic Laboratories Sample No.: 4

Lab Sample ID: X-98A2065-023 Bldg 779 Solid Paint Sample

Section: ICPAES

Lab Sample I.D.s beginning with X' indicates TCLP Extract.

% Solids for Sample : 100.0000

Date Sampled: 5/13/98 SDG No. : MAY25

Lab Receipt Date: 5/13/98 QC Report No.: SD052598.RPT

Matrix: Water ____ Soil ____ Sludge ____ Other X

Elements Identified and Measured

Concentration Units: mg/L

Analyte	Concentration	C	Q (N V * E O O S +)	M
Aluminum	0.9000	U		P
Antimony	0.4173	B		P
Arsenic	0.3000	U		P
Barium	0.1719	B		P
Beryllium	0.0150	U		P
Cadmium	0.1857	B		P
Calcium	231.2457	B	*	P
Chromium	19.7658			P
Cobalt	0.5208	B		P
Copper	0.3000	U		P
Iron	33.5013	B		P
Lead	3.5550	B		P
Magnesium	2.6187	B		P
Manganese	0.4710	B		P
Molybdenum	0.1500	U		P
Nickel	0.1500	U		P
Phosphorus	32.0349	B		P
Selenium	0.3600	U		P
Silver	0.0900	U		P
Strontium	0.2319	B	*	P
Thallium	0.3000	U		P
Titanium	0.0600	U		P
Vanadium	0.2400	U		P
Zinc	64.6327	B		P

Color Before: Orange Clarity Before: Cloudy

Color After: Orange Clarity After: Clear

Texture:

Artifacts: Fine mesh brown solids left on TCLP Filter.

Comments: Sample = 100 % solids. Pressure filtration of the TCLP solids extract through a standard TCLP pressure filtration unit, containing a 0.7 micron borosilicate glass fiber filt to obtain the TCLP final sample extract.

200

FORM 1A-1

INORGANIC ANALYSIS DATA SHEET

Lab Name: Building 559 PA Inorganic Laboratories Sample No.: 9

Lab Sample ID: X-98A2065-024 Bldg 779 Solid Paint Sample

Section: ICPAES

Lab Sample I.D.s beginning with X' indicates TCLP Extract.

% Solids for Sample : 100.0000

Date Sampled: 5/13/98 SDG No.: MAY20

Lab Receipt Date: 5/13/98 QC Report No.: SD052098.RPT

Matrix: Water ___ Soil ___ Sludge ___ Other X

Elements Identified and Measured

Concentration Units: mg/L

Analyte	Concentration	C	Q (N V * E O O S +)	M
Aluminum	0.9000	U		P
Antimony	0.3000	U		P
Arsenic	0.3000	U		P
Barium	0.3660	B		P
Beryllium	0.0150	U		P
Cadmium	0.0600	U		P
Calcium	743.0427	B		P
Chromium	0.1500	U		P
Cobalt	0.1500	U		P
Copper	0.3000	U		P
Iron	0.6000	U		P
Lead	0.5508	B		P
Magnesium	24.8946	B		P
Manganese	0.2283	B		P
Molybdenum	0.1500	U		P
Nickel	0.1500	U		P
Phosphorus	1.6000	U		P
Selenium	0.3600	U		P
Silver	0.0900	U		P
Strontium	0.5322	B		P
Thallium	0.3000	U		P
Titanium	0.0600	U		P
Vanadium	0.2400	U		P
Zinc	0.9069	B		P

Color Before: Brown Clarity Before: Cloudy

Color After: Yellow Clarity After: Clear

Texture:

Artifacts: Fine mesh brown solids left on TCLP Filter.

Comments: Sample = 100 % solids. Pressure filtration of the TCLP solids extract through a standard TCLP pressure filtration unit, containing a 0.7 micron borosilicate glass fiber filter, w[illegible] to obtain the TCLP final sample extract.

FORM 1A-1

INORGANIC ANALYSIS DATA SHEET

Lab Name: Building 559 PA Inorganic Laboratories Sample No.: 10

Lab Sample ID: X-98A2065-025 Bldg 779 Solid Paint Sample

Section: ICPAES

Lab Sample I.D.s beginning with X' indicates TCLP Extract.

% Solids for Sample : 100.0000

Date Sampled: 5/13/98 SDG No. : MAY20

Lab Receipt Date: 5/13/98 QC Report No.: SD052098.RPT

Matrix: Water ___ Soil ___ Sludge ___ Other X

Elements Identified and Measured

Concentration Units: mg/L

Analyte	Concentration	C	Q (N V * E O O S +)	M
Aluminum	1.0233	B		P
Antimony	0.3000	U		P
Arsenic	0.3000	U		P
Barium	0.2709	B		P
Beryllium	0.0150	U		P
Cadmium	0.0600	U		P
Calcium	743.9100	B		P
Chromium	0.1500	U		P
Cobalt	0.1500	U		P
Copper	0.3000	U		P
Iron	0.6000	U		P
Lead	0.5016	B		P
Magnesium	17.8898	B		P
Manganese	0.2031	B		P
Molybdenum	0.1500	U		P
Nickel	0.1500	U		P
Phosphorus	1.5000	U		P
Selenium	0.3600	U		P
Silver	0.0900	U		P
Strontium	0.5481	B		P
Thallium	0.3000	U		P
Titanium	0.1551	B		P
Vanadium	0.2400	U		P
Zinc	1.2618	B		P

Color Before: Brown Clarity Before: Cloudy

Color After: Yellow Clarity After: Clear

Texture:

Artifacts: Fine mesh brown solids left on TCLP Filter.

Comments: Sample = 100 % solids. Pressure filtration of the TCLP solids extract through a standard TCLP pressure filtration unit, containing a 0.7 micron borosilicate glass fiber filter, wa .lo obtain the TCLP final sample extract.

202

FORM 1A-1

INORGANIC ANALYSIS DATA SHEET

Lab Name: Building 559 PA Inorganic Laboratories Sample No.: 11

Lab Sample ID: X-98A2065-026 Bldg 779 Solid Paint Sample

Section: ICPAES

Lab Sample I.D.s beginning with 'X' indicates TCLP Extract.

% Solids for Sample : 100.0000

Date Sampled: 5/13/98 SDG No. : MAY20

Lab Receipt Date: 5/13/98 QC Report No.: SD052098.RPT

Matrix: Water ____ Soil ____ Sludge ____ Other X

Elements Identified and Measured

Concentration Units: mg/L

Analyte	Concentration	C	N V * E O O S + Q	M
Aluminum	0.9000	U		P
Antimony	0.3000	U		P
Arsenic	0.3000	U		P
Barium	0.4197	B		P
Beryllium	0.0150	U		P
Cadmium	0.0600	U		P
Calcium	654.5664	B		P
Chromium	0.1500	U		P
Cobalt	0.1500	U		P
Copper	0.3000	U		P
Iron	0.6000	U		P
Lead	0.4656	B		P
Magnesium	7.3920	B		P
Manganese	0.1935	B		P
Molybdenum	0.1500	U		P
Nickel	0.1500	U		P
Phosphorus	1.5000	U		P
Selenium	0.3600	U		P
Silver	0.0900	U		P
Strontium	1.2606	B		P
Thallium	0.3000	U		P
Titanium	0.0600	U		P
Vanadium	0.2400	U		P
Zinc	0.3000	U		P

Color Before: Brown Clarity Before: Cloudy

Color After: Colorless Clarity After: Clear

Texture:

Artifacts: Fine mesh brown solids left on TCLP Filter.

Comments: Sample = 100 % solids. Pressure filtration of the TCLP solids extract through a standard TCLP pressure filtration unit, containing a 0.7 micron borosilicate glass fiber filter, was pe to obtain the TCLP final sample extract.

203

FORM 1A-1

INORGANIC ANALYSIS DATA SHEET

Lab Name: Building 559 PA Inorganic Laboratories Sample No.: 12

Lab Sample ID: X-98A2065-027 Bldg 779 Solid Paint Sample

Section: ICPAES

Lab Sample I.D.s beginning with 'X' indicates TCLP Extract.

% Solids for Sample : 100.0000

Date Sampled: 5/13/98 SDG No. : MAY20

Lab Receipt Date: 5/13/98 QC Report No.: SD052098.RPT

Matrix: Water ____ Soil ____ Sludge ____ Other X

Elements Identified and Measured

Concentration Units: mg/L

Analyte	Concentration	C	N V * E O O S + Q	M
Aluminum	4.9887	B		P
Antimony	0.3000	U		P
Arsenic	0.3000	U		P
Barium	0.1500	U		P
Beryllium	0.0150	U		P
Cadmium	0.0600	U		P
Calcium	424.5654	B		P
Chromium	0.1500	U		P
Cobalt	0.1506	B		P
Copper	0.3000	U		P
Iron	0.6000	U		P
Lead	0.4311	B		P
Magnesium	6.0642	B		P
Manganese	0.2846	B		P
Molybdenum	0.1500	U		P
Nickel	0.1500	U		P
Phosphorus	4.0497	B		P
Selenium	0.3600	U		P
Silver	0.0900	U		P
Strontium	2.1984	B		P
Thallium	0.3000	U		P
Titanium	0.0600	U		P
Vanadium	0.2400	U		P
Zinc	4.3428	B		P

Color Before: Yellow Clarity Before: Cloudy

Color After: Yellow Clarity After: Clear

Texture:

Artifacts: Fine mesh yellow solids left on TCLP Filter.

Comments: Sample = 100 % solids. Pressure filtration of the TCLP solids extract through a standard TCLP pressure filtration unit, containing a 0.7 micron borosilicate glass fiber filter, was performed to obtain the TCLP final sample extract.

204

FORM 1A-1

INORGANIC ANALYSIS DATA SHEET

Lab Name: Building 559 PA Inorganic Laboratories Sample No.: 13

Lab Sample ID: X-98A2065-028 Bldg 779 Solid Paint Sample

Section: ICPAES

Lab Sample I.D.s beginning with X' indicates TCLP Extract.

% Solids for Sample : 100.0000

Date Sampled: 5/13/98 SDG No. : MAY20

Lab Receipt Date: 5/13/98 QC Report No.: SD052098.RPT

Matrix: Water ____ Soil ____ Sludge ____ Other X

Elements Identified and Measured

Concentration Units: mg/L

Analyte	Concentration	C	Q	M
Aluminum	2.7483	B		P
Antimony	0.3000	U		P
Arsenic	0.3000	U		P
Barium	0.1500	U		P
Beryllium	0.0150	U		P
Cadmium	0.0600	U		P
Calcium	1003.3158	B		P
Chromium	0.1500	U		P
Cobalt	0.1500	U		P
Copper	0.3000	U		P
Iron	0.6000	U		P
Lead	0.6960	B		P
Magnesium	21.2187	B		P
Manganese	0.2934	B		P
Molybdenum	0.1500	U		P
Nickel	0.1500	U		P
Phosphorus	1.5000	U		P
Selenium	0.3600	U		P
Silver	0.0900	U		P
Strontium	2.3088	B		P
Thallium	0.3000	U		P
Titanium	0.0600	U		P
Vanadium	0.2400	U		P
Zinc	0.8184	B		P

Color Before: Brown Clarity Before: Cloudy

Color After: Yellow Clarity After: Clear

Texture:

Artifacts: Fine mesh brown solids left on TCLP Filter.

Comments: Sample = 100 % solids. Pressure filtration of the TCLP solids extract through a standard TCLP pressure filtration unit, containing a 0.7 micron borosilicate glass fiber filter, was performed to obtain the TCLP final sample extract.

205

FORM 1A-1

INORGANIC ANALYSIS DATA SHEET

Lab Name: Building 559 PA Inorganic Laboratories Sample No.: 14

Lab Sample ID: X-98A2065-029 Bldg 779 Solid Paint Sample

Section: ICPAES

Lab Sample I.D.s beginning with X' indicates TCLP Extract.

% Solids for Sample : 100.0000

Date Sampled: 5/13/98 SDG No. : MAY20

Lab Receipt Date: 5/13/98 QC Report No.: SD052098.RPT

Matrix: Water ___ Soil ___ Sludge ___ Other X

Elements Identified and Measured

Concentration Units: mg/L

Analyte	Concentration	C	Q	M
Aluminum	0.9000	U		P
Antimony	0.3000	U		P
Arsenic	0.3000	U		P
Barium	0.4017	B		P
Beryllium	0.0150	U		P
Cadmium	0.0600	U		P
Calcium	694.4994	B		P
Chromium	0.1500	U		P
Cobalt	0.1500	U		P
Copper	0.3000	U		P
Iron	0.6000	U		P
Lead	0.4788	B		P
Magnesium	7.0923	B		P
Manganese	0.1887	B		P
Molybdenum	0.1500	U		P
Nickel	0.1500	U		P
Phosphorus	1.5000	U		P
Selenium	0.3600	U		P
Silver	0.0900	U		P
Strontium	1.3122	B		P
Thallium	0.3000	U		P
Titanium	0.0600	U		P
Vanadium	0.2400	U		P
Zinc	0.3000	U		P

Color Before: Brown Clarity Before: Cloudy

Color After: Colorless Clarity After: Clear

Texture:

Artifacts: Fine mesh brown solids left on TCLP Filter.

Comments: Sample = 100 % solids. Pressure filtration of the TCLP solids extract through a standard TCLP pressure filtration unit, containing a 0.7 micron borosilicate glass fiber filter, was to obtain the TCLP final sample extract.

206

FORM 1A-1

INORGANIC ANALYSIS DATA SHEET

Lab Name: Building 559 PA Inorganic Laboratories Sample No.: 15

Lab Sample ID: X-98A2065-030 Bldg 779 Solid Paint Sample

Section: ICPAES

Lab Sample I.D.s beginning with X' indicates TCLP Extract.

% Solids for Sample : 100.0000

Date Sampled: 5/13/98 SDG No. : MAY20

Lab Receipt Date: 5/13/98 QC Report No.: SD052098.RPT

Matrix: Water ____ Soil ____ Sludge ____ Other X

Elements Identified and Measured

Concentration Units: mg/L

Analyte	Concentration	C	Q (N V * E O O S +)	M
Aluminum	0.9000	U		P
Antimony	0.3000	U		P
Arsenic	0.3000	U		P
Barium	0.1500	U		P
Beryllium	0.0150	U		P
Cadmium	0.0600	U		P
Calcium	484.6419	B		P
Chromium	0.1500	U		P
Cobalt	1.6680	B		P
Copper	0.3000	U		P
Iron	0.6000	U		P
Lead	1.8132	B		P
Magnesium	26.1813	B		P
Manganese	0.6039	B		P
Molybdenum	0.1500	U		P
Nickel	0.1500	U		P
Phosphorus	3.0858	B		P
Selenium	0.3600	U		P
Silver	0.0900	U		P
Strontium	1.1697	B		P
Thallium	0.3000	U		P
Titanium	0.1848	B		P
Vanadium	0.2400	U		P
Zinc	3.4983	B		P

Color Before: Blue Clarity Before: Cloudy

Color After: Colorless Clarity After: Clear

Texture:

Artifacts: Fine mesh blue solids left on TCLP Filter.

Comments: Sample = 100 % solids. Pressure filtration of the TCLP solids extract through a standard TCLP pressure filtration unit, containing a 0.7 micron borosilicate glass fiber filter, was performed to obtain the TCLP final sample extract.

207

FORM 1A-1

INORGANIC ANALYSIS DATA SHEET

Lab Name: Building 559 PA Inorganic Laboratories

Sample No.: 5

Lab Sample ID: X-98A2065-031 Bldg 779 Solid Paint Sample

Section: ICPAES

Lab Sample I.D.s beginning with 'X' indicates TCLP Extract.

% Solids for Sample : 100.0000

Date Sampled: 5/13/98

SDG No. : MAY25

Lab Receipt Date: 5/13/98

QC Report No.: SD052598.RPT

Matrix: Water ____ Soil ____ Sludge ____ Other X

Elements Identified and Measured

Concentration Units: mg/L

Analyte	Concentration	C	Q	M
			N V * E O O S +	
Aluminum	2.2635	B		P
Antimony	0.3000	U		P
Arsenic	0.3000	U		P
Barium	0.3726	B		P
Beryllium	0.0150	U		P
Cadmium	0.0600	U		P
Calcium	142.8068	B		P
Chromium	2.1690	B		P
Cobalt	1.3344	B		P
Copper	0.3000	U		P
Iron	0.6000	U		P
Lead	0.9438	B		P
Magnesium	3.1600	B		P
Manganese	0.6966	B		P
Molybdenum	0.1500	U		P
Nickel	0.9810	B		P
Phosphorus	28.9704	B		P
Selenium	0.3600	U		P
Silver	0.2130	B		P
Strontium	0.1425	B		P
Thallium	0.3000	U		P
Titanium	0.0600	U		P
Vanadium	0.2400	U		P
Zinc	29.8029	B		P

Color Before: Pink

Clarity Before: Cloudy

Color After: Pink

Clarity After: Clear

Texture:

Artifacts: Fine mesh pink solids left on TCLP Filter.

Comments: Sample = 100 % solids. Pressure filtration of the TCLP solids extract through a standard TCLP pressure filtration unit, containing a 0.7 micron borosilicate glass fiber filter, was performed to obtain the TCLP final sample extract.

208

FORM 1A-1

INORGANIC ANALYSIS DATA SHEET

Lab Name: Building 559 PA Inorganic Laboratories

Sample No.: 6

Lab Sample ID: X-98A2065-032 Bldg 779 Solid Paint Sample

Section: ICPAES

Lab Sample I.D.s beginning with X' indicates TCLP Extract.

% Solids for Sample : 100.0000

Date Sampled: 5/13/98

SDG No. : MAY25

Lab Receipt Date: 5/13/98

QC Report No.: SD052598.RPT

Matrix: Water ____ Soil ____ Sludge ____ Other X

Elements Identified and Measured

Concentration Units: mg/L

Analyte	Concentration	C	Q (N V * E O O S +)	M
Aluminum	0.9000	U		P
Antimony	0.3000	U		P
Arsenic	0.3000	U		P
Barium	0.5889	B		P
Beryllium	0.0150	U		P
Cadmium	0.0600	U		P
Calcium	558.1329	B		P
Chromium	0.1500	U		P
Cobalt	0.1500	U		P
Copper	0.3000	U		P
Iron	0.6000	U		P
Lead	0.2400	U		P
Magnesium	7.0779	B		P
Manganese	0.4161	B		P
Molybdenum	0.1500	U		P
Nickel	0.1500	U		P
Phosphorus	13.6362	B		P
Selenium	0.3600	U		P
Silver	0.3345	B		P
Strontium	1.4829	B		P
Thallium	0.3000	U		P
Titanium	0.0600	U		P
Vanadium	0.2400	U		P
Zinc	22.2654	B		P

Color Before: Brown

Clarity Before: Cloudy

Color After: Colorless

Clarity After: Clear

Texture:

Artifacts: Fine mesh brown solids left on TCLP Filter.

Comments: Sample = 100 % solids. Pressure filtration of the TCLP solids extract through a standard TCLP pressure filtration unit, containing a 0.7 micron borosilicate glass fiber filter, v -to obtain the TCLP final sample extract.

209

FORM 1A-1

INORGANIC ANALYSIS DATA SHEET

Lab Name: Building 559 PA Inorganic Laboratories Sample No.: 7

Lab Sample ID: X-98A2065-033 Bldg 779 Solid Paint Sample

Section: ICPAES

Lab Sample I.D.s beginning with 'X' indicates TCLP Extract.

% Solids for Sample : 100.0000

Date Sampled: 5/13/98 SDG No. : MAY25

Lab Receipt Date: 5/13/98 QC Report No.: SD052598.RPT

Matrix: Water ____ Soil ____ Sludge ____ Other X

Elements Identified and Measured

Concentration Units: mg/L

Analyte	Concentration	C	N V * E O O S + Q	M
Aluminum	0.9000	U		P
Antimony	0.3000	U		P
Arsenic	0.3000	U		P
Barium	0.6816	B		P
Beryllium	0.0150	U		P
Cadmium	0.0600	U		P
Calcium	324.4050	B		P
Chromium	0.1500	U		P
Cobalt	0.1500	U		P
Copper	0.3000	U		P
Iron	0.6000	U		P
Lead	0.2400	U		P
Magnesium	4.0929	B		P
Manganese	0.8265	B		P
Molybdenum	0.1500	U		P
Nickel	0.1500	U		P
Phosphorus	30.4491	B		P
Selenium	0.3600	U		P
Silver	0.1752	B		P
Strontium	0.4884	B		P
Thallium	0.3000	U		P
Titanium	0.0600	U		P
Vanadium	0.2400	U		P
Zinc	52.4913	B		P

Color Before: Brown Clarity Before: Cloudy

Color After: Colorless Clarity After: Clear

Texture:

Artifacts: Fine mesh brown solids left on TCLP Filter.

Comments: Sample = 100 % solids. Pressure filtration of the TCLP solids extract through a standard TCLP pressure filtration unit, containing a 0.7 micron borosilicate glass fiber filter, w
To obtain the TCLP final sample extract.

210

FORM 1A-1

INORGANIC ANALYSIS DATA SHEET

Lab Name: Building 559 PA Inorganic Laboratories Sample No.: 8

Lab Sample ID: X-98A2065-034 Bldg 779 Solid Paint Sample

Section: ICPAES

Lab Sample I.D.s beginning with X' indicates TCLP Extract.

% Solids for Sample : 100.0000

Date Sampled: 5/13/98 SDG No.: MAY25

Lab Receipt Date: 5/12/98 QC Report No.: SD052598.RPT

Matrix: Water ____ Soil ____ Sludge ____ Other X

Elements Identified and Measured

Concentration Units: mg/L

Analyte	Concentration	C	Q (N V * E O O S +)	M
Aluminum	2.7090	B		P
Antimony	0.3000	U		P
Arsenic	0.3000	U		P
Barium	0.2220	B		P
Beryllium	0.0150	U		P
Cadmium	0.0600	U		P
Calcium	633.4569	B		P
Chromium	0.1500	U		P
Cobalt	0.1500	U		P
Copper	0.3000	U		P
Iron	0.6000	U		P
Lead	0.2400	U		P
Magnesium	13.5216	B		P
Manganese	0.1503	B		P
Molybdenum	0.1500	U		P
Nickel	0.1500	U		P
Phosphorus	1.6000	U		P
Selenium	0.3600	U		P
Silver	0.1284	B		P
Strontium	1.6563	B		P
Thallium	0.3000	U		P
Titanium	0.0600	U		P
Vanadium	0.2400	U		P
Zinc	0.9060	B		P

Color Before: Brown Clarity Before: Cloudy

Color After: Colorless Clarity After: Clear

Texture:

Artifacts: Fine mesh brown solids left on TCLP Filter.

Comments: Sample = 100 % solids. Pressure filtration of the TCLP solids extract through a standard TCLP pressure filtration unit, containing a 0.7 micron borosilicate glass fiber filter to obtain the TCLP final sample extract.

211

SIN # MTLS01-A2 REPORT

TCLP Metals

COVER PAGE

INORGANIC ANALYSES DATA PACKAGE

Lab Name: Building 559 PA Inorganic Laboratories SOW No.: 7/93

Section: ICPAES

QC Report Number: SD052698.RPT SDG No.: MAY26

Lab Sample ID's beginning with 'X' are TCLP Extracts.

Sample No.	APO Sample I. D.	Lab Sample ID.
1	X-98A2065-035	Bldg 779 Solid Paint Sample
2	X-98A2065-035 D	Bldg 779 Solid Paint Sample Lab Duplicate
3	X-98A2065-036	Bldg 779 Solid Paint Sample
4	X-98A2065-037	Bldg 779 Solid Paint Sample
5	X-98A2065-041	Bldg 779 Solid Paint Sample
6	X-TCLP EXT #1	Deionized Water Preparation Blank
7	EPA QC #21 STD	EPA QC # 21 Aqueous Laboratory Control Standard
8	EPA QC #7A STD	EPA QC # 7A Aqueous Laboratory Control Standard

Were ICP Inter-element Corrections applied? Yes/No Y

Were ICP Background Corrections applied? Yes/No Y

I have reviewed the following data for the Sample No.'s listed above.

Signature: Yvonne B Mapa

Date: June 15, 1998 Title: Analytical Chemist

Signature:

Date: Title: Reviewer

Comments:

FAXED

212

FORM 1A-1

INORGANIC ANALYSIS DATA SHEET

Lab Name: Building 559 PA Inorganic Laboratories Sample No.: 6

Lab Sample ID: X-TCLP EXT #1 TCLP Extraction Fluid Reagent Blank

Section: ICPAES

Lab Sample I.D.s beginning with 'X' indicates TCLP Extract.

% Solids for Sample : < 0.5000

Date Sampled: 6/8/98 SDG No. : MAY26

Lab Receipt Date: 6/8/98 QC Report No.: SD052698.RPT

Matrix: Water X
Soil
Sludge
Other

Elements Identified and Measured

Concentration Units: mg/L

Analyte	Concentration	C	N V * E O O S * Q	M
Aluminum	0.3000	U		P
Antimony	0.1000	U		P
Arsenic	0.1000	U		P
Barium	0.0500	U		P
Beryllium	0.0050	U		P
Cadmium	0.0200	U		P
Calcium	0.2000	U		P
Chromium	0.0500	U		P
Cobalt	0.0500	U		P
Copper	0.1000	U		P
Iron	0.2000	U		P
Lead	0.0800	U		P
Magnesium	0.2000	U		P
Manganese	0.0100	U		P
Molybdenum	0.0500	U		P
Nickel	0.0500	U		P
Phosphorus	0.5000	U		P
Selenium	0.1200	U		P
Silver	0.0300	U		P
Strontium	0.0100	U		P
Thallium	0.1000	U		P
Titanium	0.0200	U		P
Vanadium	0.0800	U		P
Zinc	0.1000	U		P

Color Before: Colorless Clarity Before: Clear

Color After: Colorless Clarity After: Clear

Texture:

Artifacts: Nothing left on TCLP Filter.

Comments: Sample < 0.50 % solids. Therefore, the filtered sample is taken to be the final TCLP extract. Pressure filtration of the initial sample through a standard TCLP pressure filtration unit, containing a 0.7 micron borosilicate glass fiber filter, was performed to obtain the final TCLP filtered sample extract.

FORM 1A-1

INORGANIC ANALYSIS DATA SHEET

Lab Name: Building 659 PA Inorganic Laboratories SAMPLE NO. 7

Lab Sample ID: EPA QC-21 Standard

Section: ICPAES

Lab Sample I.D.s beginning with 'X' indicates TCLP Extract.

% Solids (0 - N/A): 0.0000

Date Sampled: 6/9/98 SDG No.: MAY26

Lab Receipt Date: 6/9/98 QC Report No.: SD052698.RPT

Matrix: Water X Soil _____ Sludge _____ Other _____

Elements Identified and Measured

Concentration Units: (mg/L)

Analyte	Concentration	C	Q	M
Aluminum				P
Antimony	3.9297	B		P
Arsenic	4.0180	B		P
Barium				P
Beryllium	3.9655	B		P
Cadmium	4.2232			P
Calcium	4.6556	B		P
Chromium	4.2908	B		P
Cobalt	4.1820	B		P
Copper	3.6977	B		P
Iron	3.9019	B		P
Lead	4.2028	B		P
Magnesium	4.1032	B		P
Manganese	3.9144	B		P
Molybdenum	4.1943	B		P
Nickel	3.8687	B		P
Phosphorus				P
Selenium	4.1329			P
Silver				P
Strontium	4.3178	B		P
Thallium	4.0982	B		P
Titanium	3.8017	B		P
Vanadium	4.2908	B		P
Zinc	4.2105	B		P

Color Before: Clarity Before: Texture:
Color After: Clarity After:

Artifacts:

Comments: Sample = 0.00 % Solids. Total Metals Digestion only!
EPA QC-21 Trace Metals Aqueous Reference Standard
(External Control Standard).

214

FORM 1A-1

INORGANIC ANALYSIS DATA SHEET

Lab Name: Building 559 PA Inorganic Laboratories SAMPLE NO. 8

Lab Sample ID: EPA QC-7A Standard

Section: ICPAES

Lab Sample I.D.s beginning with X' indicates TCLP Extract.

% Solids (0 - N/A): 0.0000

Date Sampled: 6/9/98 SDG No.: MAY26

Lab Receipt Date: 6/9/98 QC Report No.: SD052698.RPT

Matrix: Water X Soil ____ Sludge ____ Other ____

Elements Identified and Measured

Concentration Units: (mg/L)

Analyte	Concentration	C	Q	M
Aluminum	3.7223	B		P
Antimony				P
Arsenic				P
Barium	4.0634	B		P
Beryllium				P
Cadmium				P
Calcium				P
Chromium				P
Cobalt				P
Copper				P
Iron				P
Lead				P
Magnesium				P
Manganese				P
Molybdenum				P
Nickel				P
Phosphorus				P
Selenium				P
Silver	1.7969	B		P
Strontium				P
Thallium				P
Titanium				P
Vanadium				P
Zinc				P

Color Before: Clarity Before: Texture:
Color After: Clarity After:

Artifacts:

Comments: Sample = 0.00 % Solids. Total Metals Digestion only!
EPA QC-7A Trace Metals Aqueous Reference Standard.
(External Control Standard).

215

FORM 1A-1

INORGANIC ANALYSIS DATA SHEET

Lab Name: Building 559 PA Inorganic Laboratories Sample No.: 15

Lab Sample ID: X-TCLP EXT #1 TCLP Extraction Fluid Reagent Blank

Section: ICPAES

Lab Sample I.D.s beginning with 'X' indicates TCLP Extract.

% Solids for Sample : < 0.5000

Date Sampled: 6/3/98 SDG No. : MAY25

Lab Receipt Date: 6/3/98 QC Report No.: SD052598.RPT

Matrix: Water X
Soil
Sludge
Other

Elements Identified and Measured

Concentration Units: mg/L

Analyte	Concentration	C	Q	M
Aluminum	0.3000	U		P
Antimony	0.1000	U		P
Arsenic	0.1000	U		P
Barium	0.0500	U		P
Beryllium	0.0050	U		P
Cadmium	0.0200	U		P
Calcium	0.2000	U		P
Chromium	0.0500	U		P
Cobalt	0.0500	U		P
Copper	0.1000	U		P
Iron	0.2000	U		P
Lead	0.0800	U		P
Magnesium	0.2000	U		P
Manganese	0.0100	U		P
Molybdenum	0.0500	U		P
Nickel	0.0500	U		P
Phosphorus	0.5000	U		P
Selenium	0.1200	U		P
Silver	0.0300	U		P
Strontium	0.0100	U		P
Thallium	0.1000	U		P
Titanium	0.0200	U		P
Vanadium	0.0800	U		P
Zinc	0.1000	U		P

Color Before: Colorless Clarity Before: Clear

Color After: Colorless Clarity After: Clear

Texture:

Artifacts: Nothing left on TCLP Filter.

Comments: Sample < 0.50 % solids. Therefore, the filtered sample is taken to be the final TCLP extract. Pressure filtration of the initial sample through a standard TCLP pressure filtration unit containing a 0.7 micron borosilicate glass fiber filter, was performed to obtain TCLP filtered sample extract.

FORM 1A-1

INORGANIC ANALYSIS DATA SHEET

Lab Name: Building 559 PA Inorganic Laboratories

SAMPLE NO. 16

Lab Sample ID: EPA QC-21 Standard

Section: ICPAES

Lab Sample I.D.s beginning with X' indicates TCLP Extract.

% Solids (0 - N/A) : 0.0000

Date Sampled: 6/9/98 SDG No.: MAY25

Lab Receipt Date: 6/9/98 QC Report No.: SD052598.RPT

Matrix: Water X Soil ____ Sludge ____ Other ____

Elements Identified and Measured

Concentration Units: (mg/L)

Analyte	Concentration	C	Q	M
Aluminum				P
Antimony	4.0113	B		P
Arsenic	4.0375	B		P
Barium				P
Beryllium	3.8868	B		P
Cadmium	4.2610			P
Calcium	3.7052	B		P
Chromium	4.2479	B		P
Cobalt	3.9222	B		P
Copper	3.7413	B		P
Iron	3.9389	B		P
Lead	4.2284	B		P
Magnesium	4.0537	B		P
Manganese	4.0059	B		P
Molybdenum	4.2138	B		P
Nickel	4.0008	B		P
Phosphorus				P
Selenium	3.9656			P
Silver				P
Strontium	4.2906	B		P
Thallium	3.9674	B		P
Titanium	3.9238	B		P
Vanadium	4.2003	B		P
Zinc	4.2171	B		P

Color Before: Clarity Before: Texture:
Color After: Clarity After:

Artifacts:

Comments: Sample = 0.00 % Solids. Total Metals Digestion only!
EPA QC-21 Trace Metals Aqueous Reference Standard
(External Control Standard).

217

FORM 1A-1

INORGANIC ANALYSIS DATA SHEET

Lab Name: Building 559 PA Inorganic Laboratories

SAMPLE NO. 17

Lab Sample ID: EPA QC-7A Standard

Section: ICPAES

Lab Sample I.D.s beginning with 'X' indicates TCLP Extract.

% Solids (0 - N/A) : 0.0000

Date Sampled: 6/9/98

SDG No.: MAY25

Lab Receipt Date: 6/9/98

QC Report No.: SD052598.RPT

Matrix: Water X Soil ____ Sludge ____ Other ____

Elements Identified and Measured

Concentration Units: (mg/L)

Analyte	Concentration	C	Q	M
Aluminum	3.9198	B		P
Antimony				P
Arsenic				P
Barium	4.1443	B		P
Beryllium				P
Cadmium				P
Calcium				P
Chromium				P
Cobalt				P
Copper				P
Iron				P
Lead				P
Magnesium				P
Manganese				P
Molybdenum				P
Nickel				P
Phosphorus				P
Selenium				P
Silver	1.9399	B		P
Strontium				P
Thallium				P
Titanium				P
Vanadium				P
Zinc				P

Color Before:
Color After:

Clarity Before:
Clarity After:

Texture:

Artifacts:

Comments: Sample = 0.00 % Solids. Total Metals Digestion only!
EPA QC-7A Trace Metals Aqueous Reference Standard.
(External Control Standard).

218

FORM 1A-1

INORGANIC ANALYSIS DATA SHEET

Lab Name: Building 559 PA Inorganic Laboratories Sample No.: 1

Lab Sample ID: X-98A2065-035 Bldg 779 Solid Paint Sample

Section: ICPAES

Lab Sample I.D.s beginning with X' indicates TCLP Extract.

% Solids for Sample : 100.0000

Date Sampled: 5/13/98 SDG No. : MAY26

Lab Receipt Date: 5/13/98 QC Report No.: SD052698.RPT

Matrix: Water ____ Soil ____ Sludge ____ Other X

Elements Identified and Measured

Concentration Units: mg/L

Analyte	Concentration	C	Q	M
Aluminum	0.9000	U		P
Antimony	0.3000	U		P
Arsenic	0.3000	U		P
Barium	0.2733	B		P
Beryllium	0.0150	U		P
Cadmium	0.0600	U		P
Calcium	712.3143	B		P
Chromium	0.1500	U		P
Cobalt	0.1500	U		P
Copper	0.3000	U		P
Iron	0.6000	U		P
Lead	0.2400	U		P
Magnesium	10.8873	B		P
Manganese	0.0930	B		P
Molybdenum	0.1500	U		P
Nickel	0.1500	U		P
Phosphorus	1.5000	U		P
Selenium	0.3600	U		P
Silver	0.0900	U		P
Strontium	1.9077	B		P
Thallium	0.3000	U		P
Titanium	0.0600	U		P
Vanadium	0.2400	U		P
Zinc	0.3111	B		P

Color Before: Brown Clarity Before: Cloudy

Color After: Colorless Clarity After: Clear

Texture:

Artifacts: Fine mesh brown solids left on TCLP Filter.

Comments: Sample = 100 % solids. Pressure filtration of the TCLP solids extract through a standard TCLP pressure filtration unit, containing a 0.7 micron borosilicate glass fiber filter, was performed to obtain the TCLP final sample extract.

219

FORM 1A-1

INORGANIC ANALYSIS DATA SHEET

Lab Name: Building 559 PA Inorganic Laboratories Sample No.: 2

Lab Sample ID: X-98A2065-035 D Bldg 779 Solid Paint Sample Lab Duplicate

Section: ICPAES

Lab Sample I.D.s beginning with 'X' indicates TCLP Extract.

% Solids for Sample : 100.0000

Date Sampled: 5/13/98 SDG No.: MAY26

Lab Receipt Date: 5/13/98 QC Report No.: SD052698.RPT

Matrix: Water ____ Soil ____ Sludge ____ Other X

Elements Identified and Measured

Concentration Units: mg/L

Analyte	Concentration	C	Q (N V * E O O S +)	M
Aluminum	0.9000	U		P
Antimony	0.3000	U		P
Arsenic	0.3000	U		P
Barium	0.2601	B		P
Beryllium	0.0150	U		P
Cadmium	0.0600	U		P
Calcium	704.5869	B		P
Chromium	0.1500	U		P
Cobalt	0.1500	U		P
Copper	0.3000	U		P
Iron	0.6000	U		P
Lead	0.2400	U		P
Magnesium	11.5947	B		P
Manganese	0.0894	B		P
Molybdenum	0.1500	U		P
Nickel	0.1500	U		P
Phosphorus	1.5000	U		P
Selenium	0.3600	U		P
Silver	0.0900	U		P
Strontium	1.9308	B		P
Thallium	0.3000	U		P
Titanium	0.0600	U		P
Vanadium	0.2400	U		P
Zinc	0.3000	U		P

Color Before: Brown Clarity Before: Cloudy

Color After: Colorless Clarity After: Clear

Texture:

Artifacts: Fine mesh brown solids left on TCLP Filter.

Comments: Sample = 100 % solids. Pressure filtration of the TCLP solids extract through a standard TCLP pressure filtration unit, containing a 0.7 micron borosilicate glass fiber filter, was performed to obtain the TCLP final sample extract.

220

FORM 1A-1

INORGANIC ANALYSIS DATA SHEET

Lab Name: Building 559 PA Inorganic Laboratories Sample No.: 3

Lab Sample ID: X-98A2065-036 Bldg 779 Solid Paint Sample

Section: ICPAES

Lab Sample I.D.s beginning with X' indicates TCLP Extract.

% Solids for Sample : 100.0000

Date Sampled: 5/13/98 SDG No. : MAY26

Lab Receipt Date: 5/13/98 QC Report No.: SD052698.RPT

Matrix: Water ____ Soil ____ Sludge ____ Other X

Elements Identified and Measured

Concentration Units: mg/L

Analyte	Concentration	C	Q (N V * E O O S +)	M
Aluminum	0.9000	U		P
Antimony	0.3000	U		P
Arsenic	0.3000	U		P
Barium	0.2751	B		P
Beryllium	0.0150	U		P
Cadmium	0.0600	U		P
Calcium	662.6910	B		P
Chromium	0.1500	U		P
Cobalt	0.1500	U		P
Copper	0.3000	U		P
Iron	0.6000	U		P
Lead	0.2400	U		P
Magnesium	10.9395	B		P
Manganese	0.0648	B		P
Molybdenum	0.1500	U		P
Nickel	0.1500	U		P
Phosphorus	1.5000	U		P
Selenium	0.3600	U		P
Silver	0.0900	U		P
Strontium	1.7956	B		P
Thallium	0.3000	U		P
Titanium	0.0600	U		P
Vanadium	0.2400	U		P
Zinc	0.3000	U		P

Color Before: Brown Clarity Before: Cloudy

Color After: Colorless Clarity After: Clear

Texture:

Artifacts: Fine mesh brown solids left on TCLP Filter.

Comments: Sample = 100 % solids. Pressure filtration of the TCLP solids extract through a standard TCLP pressure filtration unit, containing a 0.7 micron borosilicate glass fiber filter, was [illegible] to obtain the TCLP final sample extract.

221

FORM 1A-1

INORGANIC ANALYSIS DATA SHEET

Lab Name: Building 559 PA Inorganic Laboratories Sample No.: 4

Lab Sample ID: X-98A2065-037 Bldg 779 Solid Paint Sample

Section: ICPAES

Lab Sample I.D.s beginning with 'X' indicates TCLP Extract.

% Solids for Sample : 100.0000

Date Sampled: 5/13/98 SDG No. : MAY26

Lab Receipt Date: 5/13/98 QC Report No.: SD052698.RPT

Matrix: Water ____ Soil ____ Sludge ____ Other X

Elements Identified and Measured

Concentration Units: mg/L

Analyte	Concentration	C	Q	M
Aluminum	0.9000	U		P
Antimony	0.3000	U		P
Arsenic	0.3000	U		P
Barium	0.3129	B		P
Beryllium	0.0160	U		P
Cadmium	0.0600	U		P
Calcium	685.1562	B		P
Chromium	0.1500	U		P
Cobalt	0.3162	B		P
Copper	0.3000	U		P
Iron	0.6000	U		P
Lead	0.2400	U		P
Magnesium	10.8444	B		P
Manganese	1.2897	B		P
Molybdenum	0.1500	U		P
Nickel	0.1500	U		P
Phosphorus	1.5000	U		P
Selenium	0.3600	U		P
Silver	0.0900	U		P
Strontium	2.4528	B		P
Thallium	0.3000	U		P
Titanium	0.0600	U		P
Vanadium	0.2400	U		P
Zinc	0.3000	U		P

Color Before: Brown Clarity Before: Cloudy

Color After: Colorless Clarity After: Clear

Texture:

Artifacts: Fine mesh brown solids left on TCLP Filter.

Comments: Sample = 100 % solids. Pressure filtration of the TCLP solids extract through a standard TCLP pressure filtration unit, containing a 0.7 micron borosilicate glass fiber filter, was performed to obtain the TCLP final sample extract.

222

FORM 1A-1

INORGANIC ANALYSIS DATA SHEET

Lab Name: Building 559 PA Inorganic Laboratories Sample No.: 9

Lab Sample ID: X-98A2065-038 Bldg 779 Solid Paint Sample

Section: ICPAES

Lab Sample I.D.s beginning with X' indicates TCLP Extract.

% Solids for Sample : 100.0000

Date Sampled: 5/13/98 SDG No. : MAY25

Lab Receipt Date: 5/13/98 QC Report No.: SD052598.RPT

Matrix: Water ____ Soil ____ Sludge ____ Other X

Elements Identified and Measured

Concentration Units: mg/L

Analyte	Concentration	C	N V * E O O S + Q	M
Aluminum	0.9000	U		P
Antimony	0.3000	U		P
Arsenic	0.3000	U		P
Barium	0.4584	B		P
Beryllium	0.0150	U		P
Cadmium	0.0600	U		P
Calcium	504.8391	B	*	P
Chromium	0.1500	U		P
Cobalt	0.1500	U		P
Copper	0.3000	U		P
Iron	0.6000	U		P
Lead	0.2400	U		P
Magnesium	13.4433	B		P
Manganese	0.3594	B		P
Molybdenum	0.1500	U		P
Nickel	0.1500	U		P
Phosphorus	2.0745	B		P
Selenium	0.3600	U		P
Silver	0.0900	U		P
Strontium	4.5060	B	*	P
Thallium	0.3000	U		P
Titanium	0.0600	U		P
Vanadium	0.2400	U		P
Zinc	0.8397	B		P

Color Before: Brown Clarity Before: Cloudy

Color After: Colorless Clarity After: Clear

Texture:

Artifacts: Fine mesh brown solids left on TCLP Filter.

Comments: Sample = 100 % solids. Pressure filtration of the TCLP solids extract through a standard TCLP pressure filtration unit, containing a 0.7 micron borosilicate glass fiber filter, was performed to obtain the TCLP final sample extract.

FORM 1A-1

INORGANIC ANALYSIS DATA SHEET

Lab Name: Building 559 PA Inorganic Laboratories Sample No.: 10

Lab Sample ID: X-98A2065-039 Bldg 779 Solid Paint Sample

Section: ICPAES

Lab Sample I.D.s beginning with X' indicates TCLP Extract.

% Solids for Sample : 100.0000

Date Sampled: 5/13/98 SDG No. : MAY25

Lab Receipt Date: 5/13/98 QC Report No.: SD052598.RPT

Matrix: Water ____ Soil ____ Sludge ____ Other X

Elements Identified and Measured

Concentration Units: mg/L

Analyte	Concentration	C	Q	M
Aluminum	0.9000	U		P
Antimony	0.3000	U		P
Arsenic	0.3000	U		P
Barium	0.1500	U		P
Beryllium	0.0150	U		P
Cadmium	0.0600	U		P
Calcium	59.6622	B		P
Chromium	0.1500	U		P
Cobalt	0.2580	B		P
Copper	0.3000	U		P
Iron	0.6000	U		P
Lead	11.9907			P
Magnesium	2.2767	B		P
Manganese	0.2601	B		P
Molybdenum	0.1500	U		P
Nickel	0.1500	U		P
Phosphorus	6.7209	B		P
Selenium	0.3600	U		P
Silver	0.0900	U		P
Strontium	0.0942	B		P
Thallium	0.3000	U		P
Titanium	0.7503	B		P
Vanadium	0.2400	U		P
Zinc	5.4366	B		P

Color Before: White Clarity Before: Cloudy

Color After: Colorless Clarity After: Clear

Texture:

Artifacts: Fine mesh white solids left on TCLP Filter.

Comments: Sample = 100 % solids. Pressure filtration of the TCLP solids extract through a standard TCLP pressure filtration unit, containing a 0.7 micron borosilicate glass fiber filter, was to obtain the TCLP final sample extract.

224

FORM 1A-1

INORGANIC ANALYSIS DATA SHEET

Lab Name: Building 559 PA Inorganic Laboratories Sample No.: 11

Lab Sample ID: X-98A2068-040 Bldg 779 Solid Paint Sample

Section: ICPAES

Lab Sample I.D.s beginning with X' indicates TCLP Extract.

% Solids for Sample : 100.0000

Date Sampled: 5/13/98 SDG No. : MAY25

Lab Receipt Date: 5/13/98 QC Report No.: SD052598.RPT

Matrix: Water ____ Soil ____ Sludge ____ Other X

Elements Identified and Measured

Concentration Units: mg/L

Analyte	Concentration	C	Q	M
Aluminum	0.9000	U		P
Antimony	0.3000	U		P
Arsenic	0.3000	U		P
Barium	0.1695	B		P
Beryllium	0.0150	U		P
Cadmium	0.0600	U		P
Calcium	407.7573	B	*	P
Chromium	0.1500	U		P
Cobalt	0.2895	B		P
Copper	0.3000	U		P
Iron	0.6000	U		P
Lead	0.2400	U		P
Magnesium	3.4590	B		P
Manganese	0.2736	B		P
Molybdenum	0.1500	U		P
Nickel	0.1500	U		P
Phosphorus	6.5436	B		P
Selenium	0.3600	U		P
Silver	0.1227	B		P
Strontium	0.5361	B	*	P
Thallium	0.3000	U		P
Titanium	0.7032	B		P
Vanadium	0.2400	U		P
Zinc	7.3548	B		P

Color Before: White Clarity Before: Cloudy

Color After: Colorless Clarity After: Clear

Texture:

Artifacts: Fine mesh white solids left on TCLP Filter.

Comments: Sample = 100 % solids. Pressure filtration of the TCLP solids extract through a standard TCLP pressure filtration unit, containing a 0.7 micron borosilicate glass fiber filter, was performed to obtain the TCLP final sample extract.

FORM 1A-1

INORGANIC ANALYSIS DATA SHEET

Lab Name: Building 559 PA Inorganic Laboratories Sample No.: 5

Lab Sample ID: X-98A2065-041 Bldg 779 Solid Paint Sample

Section: ICPAES

Lab Sample I.D.s beginning with X' indicates TCLP Extract.

% Solids for Sample : 100.0000

Date Sampled: 5/13/98 SDG No. : MAY26

Lab Receipt Date: 5/13/98 QC Report No.: SD052698.RPT

Matrix: Water ____ Soil ____ Sludge ____ Other X

Elements Identified and Measured

Concentration Units: mg/L

Analyte	Concentration	C	Q (N V * E O O S +)	M
Aluminum	0.9000	U		P
Antimony	0.3000	U		P
Arsenic	0.3000	U		P
Barium	0.8208	B		P
Beryllium	0.0150	U		P
Cadmium	0.0600	U		P
Calcium	238.9761	B		P
Chromium	0.1500	U		P
Cobalt	0.1500	U		P
Copper	0.3000	U		P
Iron	0.6000	U		P
Lead	0.5562	B		P
Magnesium	140.7270	B		P
Manganese	0.0852	B		P
Molybdenum	0.1500	U		P
Nickel	0.1500	U		P
Phosphorus	1.5000	U		P
Selenium	0.3600	U		P
Silver	0.0900	U		P
Strontium	0.8049	B		P
Thallium	0.3000	U		P
Titanium	0.0600	U		P
Vanadium	0.2400	U		P
Zinc	0.3000	U		P

Color Before: White Clarity Before: Cloudy

Color After: Colorless Clarity After: Clear

Texture:

Artifacts: Fine mesh white solids left on TCLP Filter.

Comments: Sample = 100 % solids. Pressure filtration of the TCLP solids extract through a standard TCLP pressure filtration unit, containing a 0.7 micron borosilicate glass fiber filter, was performed to obtain the TCLP final sample extract.

FORM 1A-1

INORGANIC ANALYSIS DATA SHEET

Lab Name: Building 559 PA Inorganic Laboratories Sample No.: 12

Lab Sample ID: X-98A2065-042 Bldg 779 Solid Paint Sample

Section: ICPAES

Lab Sample I.D.s beginning with 'X' indicates TCLP Extract.

% Solids for Sample : 100.0000

Date Sampled: 5/13/98 SDG No. : MAY25

Lab Receipt Date: 5/13/98 QC Report No.: SD052598.RPT

Matrix: Water ___ Soil ___ Sludge ___ Other X

Elements Identified and Measured

Concentration Units: mg/L

Analyte	Concentration	C	N V * E O O S + Q	M
Aluminum	0.9000	U		P
Antimony	0.3000	U		P
Arsenic	0.3000	U		P
Barium	0.3528	B		P
Beryllium	0.0150	U		P
Cadmium	0.0600	U		P
Calcium	176.3730	B		P
Chromium	0.1500	U		P
Cobalt	0.1500	U		P
Copper	0.3000	U		P
Iron	0.6000	U		P
Lead	0.2400	U		P
Magnesium	53.0968	B		P
Manganese	0.0300	U		P
Molybdenum	0.1500	U		P
Nickel	0.1500	U		P
Phosphorus	1.5000	U		P
Selenium	0.3600	U		P
Silver	0.0900	U		P
Strontium	0.5094	B		P
Thallium	0.3000	U		P
Titanium	0.0600	U		P
Vanadium	0.2400	U		P
Zinc	0.4332	B		P

Color Before: White Clarity Before: Cloudy

Color After: Colorless Clarity After: Clear

Texture:

Artifacts: Fine mesh white solids left on TCLP Filter.

Comments: Sample = 100 % solids. Pressure filtration of the TCLP solids extract through a standard TCLP pressure filtration unit, containing a 0.7 micron borosilicate glass fiber filter, was pe to obtain the TCLP final sample extract.

227

FORM 1A-1

INORGANIC ANALYSIS DATA SHEET

Lab Name: Building 559 PA Inorganic Laboratories Sample No.: 13

Lab Sample ID: X-98A2065-043 Bldg 779 Solid Paint Sample

Section: ICPAES

Lab Sample I.D.s beginning with 'X' indicates TCLP Extract.

% Solids for Sample : 100.0000

Date Sampled: 5/13/98 SDG No. : MAY25

Lab Receipt Date: 5/13/98 QC Report No.: SD052598.RPT

Matrix: Water ____ Soil ____ Sludge ____ Other X

Elements Identified and Measured

Concentration Units: mg/L

Analyte	Concentration	C	Q (N V E O O S +)	M
Aluminum	0.9000	U		P
Antimony	0.3000	U		P
Arsenic	0.3000	U		P
Barium	0.4641	B		P
Beryllium	0.0150	U		P
Cadmium	0.0600	U		P
Calcium	499.4211	B		P
Chromium	0.1500	U		P
Cobalt	0.1500	U		P
Copper	0.3000	U		P
Iron	0.6000	U		P
Lead	0.2400	U		P
Magnesium	2.4630	B		P
Manganese	0.5778	B		P
Molybdenum	0.1500	U		P
Nickel	0.1500	U		P
Phosphorus	1.5000	U		P
Selenium	0.3600	U		P
Silver	0.0900	U		P
Strontium	2.1327	B		P
Thallium	0.3000	U		P
Titanium	0.0600	U		P
Vanadium	0.2400	U		P
Zinc	1.2756	B		P

Color Before: Brown Clarity Before: Cloudy

Color After: Colorless Clarity After: Clear

Texture:

Artifacts: Fine mesh brown solids left on TCLP Filter.

Comments: Sample = 100 % solids. Pressure filtration of the TCLP solids extract through a standard TCLP pressure filtration unit, containing a 0.7 micron borosilicate glass fiber filter, was [illegible] to obtain the TCLP final sample extract.

228

FORM 1A-1

INORGANIC ANALYSIS DATA SHEET

Lab Name: Building 559 PA Inorganic Laboratories

Sample No.: 14

Lab Sample ID: X-98A2065-044 Bldg 779 Solid Paint Sample

Section: ICPAES

Lab Sample I.D.s beginning with 'X' indicates TCLP Extract.

% Solids for Sample : 100.0000

Date Sampled: 5/13/98

SDG No. : MAY25

Lab Receipt Date: 5/13/98

QC Report No.: SD052598.RPT

Matrix: Water ____ Soil ____ Sludge ____ Other X

Elements Identified and Measured

Concentration Units: mg/L

Analyte	Concentration	C	N V * E O O S + Q	M
Aluminum	0.9000	U		P
Antimony	0.3000	U		P
Arsenic	0.3000	U		P
Barium	0.2184	B		P
Beryllium	0.0150	U		P
Cadmium	0.0600	U		P
Calcium	720.1941	B	*	P
Chromium	0.1500	U		P
Cobalt	0.1500	U		P
Copper	0.3000	U		P
Iron	0.6000	U		P
Lead	0.2400	U		P
Magnesium	6.3591	B		P
Manganese	0.6258	B		P
Molybdenum	0.1500	U		P
Nickel	0.1500	U		P
Phosphorus	1.5000	U		P
Selenium	0.3600	U		P
Silver	0.0900	U		P
Strontium	3.7047	B	*	P
Thallium	0.3000	U		P
Titanium	0.0600	U		P
Vanadium	0.2400	U		P
Zinc	0.6132	B		P

Color Before: Brown

Clarity Before: Cloudy

Color After: Colorless

Clarity After: Clear

Texture:

Artifacts: Fine mesh brown solids left on TCLP Filter.

Comments: Sample = 100 % solids. Pressure filtration of the TCLP solids extract through a standard TCLP pressure filtration unit, containing a 0.7 micron borosilicate glass fiber filter, was performed to obtain the TCLP final sample extract.

229

SIN # MTLS01-A2 REPORT

COVER PAGE

INORGANIC ANALYSES DATA PACKAGE

Lab Name: Building 559 PA Inorganic Laboratories SOW No.: 7/93

Section: ICPAES

QC Report Number: SD071498.RPT SDG No.: JUL14

ENTERED

Lab Sample ID's beginning with 'X' are TCLP Extracts.

Sample No.	APO Sample I. D.	Lab Sample ID.
1	X-98A5204-001	Bldg 779 Solid Sample
2	X-98A5204-002	Bldg 779 Solid Sample
3	X-98A5204-002 D	Bldg 779 Solid Sample Lab Duplicate
4	X-TCLP EXT #1	TCLP Extraction Fluid Reagent Blank
5	EPA QC #21 STD	EPA QC # 21 Aqueous Laboratory Control Standard
6	EPA QC #7A STD	EPA QC # 7A Aqueous Laboratory Control Standard

Were ICP Inter-element Corrections applied? Yes/No Y

Were ICP Background Corrections applied? Yes/No Y

I have reviewed the following data for the Sample No.'s listed above.

Signature: R.C. Kelly

Date: 7/31/98 Title: Analytical Chemist

Signature:

Date: Title: Reviewer

Comments: FAX 6538 8-7-98

230

FORM 1A-1

INORGANIC ANALYSIS DATA SHEET

Lab Name: Building 559 PA Inorganic Laboratories Sample No.: 1

Lab Sample ID: X-98A5204-001 Bldg 779 Solid Sample

Section: ICPAES

Lab Sample I.D.s beginning with X' indicates TCLP Extract.

% Solids for Sample : 100.0000

Date Sampled: 7/21/98 SDG No. : JUL14

Lab Receipt Date: 7/21/98 QC Report No.: SD071498.RPT

Matrix: Water ____ Soil ____ Sludge ____ Other X

Elements Identified and Measured

Concentration Units: mg/L

Analyte	Concentration	C	Q (N V * E O O S +)	M
Aluminum	0.9000	U	N	P
Antimony	0.6165	B		P
Arsenic	0.3000	U		P
Barium	0.2772	B		P
Beryllium	0.0150	U		P
Cadmium	0.0600	U		P
Calcium	0.7956	B		P
Chromium	0.1500	U		P
Cobalt	0.1500	U		P
Copper	0.3000	U		P
Iron	18.7782	B		P
Lead	0.6954	B		P
Magnesium	0.6000	U		P
Manganese	0.4095	B		P
Molybdenum	0.1500	U		P
Nickel	0.1500	U		P
Phosphorus	456.4572	B		P
Selenium	0.3600	U		P
Silver	0.0900	U		P
Strontium	0.0300	U		P
Thallium	0.3000	U		P
Titanium	0.0600	U		P
Vanadium	0.2400	U		P
Zinc	797.4954	B		P

Color Before: Colorless Clarity Before: Clear

Color After: Brown Clarity After: Cloudy

Texture:

Artifacts: Fine mesh brown solids left on TCLP Filter.

Comments: Sample = 100 % solids. Pressure filtration of the TCLP solids extract through a standard pressure filtration unit, containing a 0.7 micron borosilicate glass fiber filter, was performed to obtain the TCLP final sample extract.

231

FORM 1A-1

INORGANIC ANALYSIS DATA SHEET

Lab Name: Building 559 PA Inorganic Laboratories Sample No.: 2

Lab Sample ID: X-98A5204-002 Bldg 779 Solid Sample

Section: ICPAES

Lab Sample I.D.s beginning with X' indicates TCLP Extract.

% Solids for Sample : 100.0000

Date Sampled: 7/21/98 SDG No. : JUL14

Lab Receipt Date: 7/21/98 QC Report No.: SD071498.RPT

Matrix: Water ____ Soil ____ Sludge ____ Other X

Elements Identified and Measured

Concentration Units: mg/L

Analyte	Concentration	C	Q (N V * E O O S +)	M
Aluminum	1.1823	B	N	P
Antimony	0.7287	B		P
Arsenic	0.3000	U		P
Barium	2.4396	B		P
Beryllium	0.0150	U		P
Cadmium	0.0600	U		P
Calcium	2.5125	B		P
Chromium	1.0230	B		P
Cobalt	0.1500	U		P
Copper	0.3000	U		P
Iron	7.3266	B		P
Lead	0.7362	B		P
Magnesium	0.6000	U		P
Manganese	0.3162	B		P
Molybdenum	0.1500	U		P
Nickel	0.1617	B		P
Phosphorus	359.2050	B		P
Selenium	0.3600	U		P
Silver	0.0900	U		P
Strontium	0.0300	U		P
Thallium	0.3000	U		P
Titanium	0.0600	U		P
Vanadium	0.2400	U		P
Zinc	601.5051	B		P

Color Before: Colorless Clarity Before: Clear

Color After: Brown Clarity After: Cloudy

Texture:

Artifacts: Fine mesh brown solids left on TCLP Filter.

Comments: Sample = 100 % solids. Pressure filtration of the TCLP solids extract through a standa pressure filtration unit, containing a 0.7 micron borosilicate glass fiber filter, was perform to obtain the TCLP final sample extract.

232

FORM 1A-1

INORGANIC ANALYSIS DATA SHEET

Lab Name: Building 559 PA Inorganic Laboratories

Sample No.: 3

Lab Sample ID: X-98A5204-002 D Bldg 779 Solid Sample Lab Duplicate

Section: ICPAES

Lab Sample I.D.s beginning with X' indicates TCLP Extract

% Solids for Sample : 100.0000

Date Sampled: 7/21/98

SDG No. : JUL14

Lab Receipt Date: 7/21/98

QC Report No.: SD071498.RPT

Matrix:
Water
Soil
Sludge
Other X

Elements Identified and Measured

Concentration Units: mg/L

Analyte	Concentration	C	N V * E O O S + Q	M
Aluminum	1.1409	B	N	P
Antimony	0.8181	B		P
Arsenic	0.3000	U		P
Barium	2.4165	B		P
Beryllium	0.0150	U		P
Cadmium	0.0600	U		P
Calcium	2.5632	B		P
Chromium	1.0248	B		P
Cobalt	0.1500	U		P
Copper	0.3000	U		P
Iron	7.2066	B		P
Lead	0.7371	B		P
Magnesium	0.6000	U		P
Manganese	0.3075	B		P
Molybdenum	0.1500	U		P
Nickel	0.1500	U		P
Phosphorus	347.6838	B		P
Selenium	0.3600	U		P
Silver	0.0900	U		P
Strontium	0.0300	U		P
Thallium	0.3000	U		P
Titanium	0.0600	U		P
Vanadium	0.2400	U		P
Zinc	601.5393	B		P

Color Before: Colorless

Clarity Before: Clear

Color After: Brown

Clarity After: Cloudy

Texture:

Artifacts: Fine mesh brown solids left on TCLP Filter.

Comments: Sample = 100 % solids. Pressure filtration of the TCLP solids extract through a standard T pressure filtration unit, containing a 0.7 micron borosilicate glass fiber filter, was performed to obtain the TCLP final sample extract.

233

FORM 1A-1

INORGANIC ANALYSIS DATA SHEET

Lab Name: Building 559 PA Inorganic Laboratories Sample No.: 4

Lab Sample ID: X-TCLP EXT #1 TCLP Extraction Fluid Reagent Blank

Section: ICPAES

Lab Sample I.D.s beginning with X' indicates TCLP Extract.

% Solids for Sample : < 0.5000

Date Sampled: 7/27/98 SDG No. : JUL14

Lab Receipt Date: 7/27/98 QC Report No.: SD071498.RPT

Matrix: Water X
Soil
Sludge
Other

Elements Identified and Measured

Concentration Units: mg/L

Analyte	Concentration	C	Q (N V * E O O S +)	M
Aluminum	0.3000	U	N	P
Antimony	0.1000	U		P
Arsenic	0.1000	U		P
Barium	0.0500	U		P
Beryllium	0.0050	U		P
Cadmium	0.0200	U		P
Calcium	0.2000	U		P
Chromium	0.0500	U		P
Cobalt	0.0500	U		P
Copper	0.1000	U		P
Iron	0.2000	U		P
Lead	0.0800	U		P
Magnesium	0.2000	U		P
Manganese	0.0100	U		P
Molybdenum	0.0500	U		P
Nickel	0.0500	U		P
Phosphorus	0.5000	U		P
Selenium	0.1200	U		P
Silver	0.0300	U		P
Strontium	0.0100	U		P
Thallium	0.1000	U		P
Titanium	0.0200	U		P
Vanadium	0.0800	U		P
Zinc	0.1000	U		P

Color Before: Colorless Clarity Before: Clear

Color After: Colorless Clarity After: Clear

Texture:

Artifacts: Nothing left on TCLP Filter.

Comments: Sample < 0.50 % solids. Therefore, the filtered sample is taken to be the final TCLP extra Pressure filtration of the initial sample through a standard TCLP pressure filtration unit, containing a 0.7 micron borosilicate glass fiber filter, was performed to obtain the final TCLP filtered sample extract.

234

FORM 1A-1

INORGANIC ANALYSIS DATA SHEET

Lab Name: Building 559 PA Inorganic Laboratories

SAMPLE NO. 5

Lab Sample ID: EPA QC-21 Standard

Section: ICPAES

Lab Sample I.D.s beginning with X' indicates TCLP Extract.

% Solids (0 - N/A) : 0.0000

Date Sampled: 7/28/98

SDG No.: JUL14

Lab Receipt Date: 7/28/98

QC Report No.: SD071498.RPT

Matrix: Water X Soil ____ Sludge ____ Other ____

Elements Identified and Measured

Concentration Units: (mg/L)

Analyte	Concentration	C	Q	M
Aluminum				P
Antimony	4.1575	B		P
Arsenic	4.0165	B		P
Barium				P
Beryllium	4.0921	B		P
Cadmium	4.2376			P
Calcium	4.4200	B		P
Chromium	4.3829	B		P
Cobalt	4.0990	B		P
Copper	3.9724	B		P
Iron	4.0057	B		P
Lead	4.3679	B		P
Magnesium	4.3797	B		P
Manganese	4.0136	B		P
Molybdenum	4.3133	B		P
Nickel	4.0577	B		P
Phosphorus				P
Selenium	3.9512			P
Silver				P
Strontium	4.2148	B		P
Thallium	4.0262	B		P
Titanium	3.9559	B		P
Vanadium	4.2749	B		P
Zinc	4.2116	B		P

Color Before:
Color After:

Clarity Before:
Clarity After:

Texture:

Artifacts:

Comments: Sample = 0.00 % Solids. Total Metals-Digestion only! EPA QC-21 Trace Metals Aqueous Reference Standard. (External Control Standard).

236

FORM 1A-1

INORGANIC ANALYSIS DATA SHEET

Lab Name: Building 559 PA Inorganic Laboratories

Lab Sample ID: EPA QC-7A Standard

SAMPLE NO. 6

Section: ICPAES

% Solids (0 - N/A): 0.0000

Lab Sample I.D.s beginning with X' indicates TCLP Extract.

Date Sampled: 7/20/98

SDG No.: JUL14

Lab Receipt Date: 7/28/98

QC Report No.: SD071498.RPT

Matrix: Water X Soil ____ Sludge ____ Other ____

Elements Identified and Measured

Concentration Units: (mg/L)

Analyte	Concentration	C	Q	M
Aluminum	4.3147	B		P
Antimony				P
Arsenic				P
Barium	4.2273	B		P
Beryllium				P
Cadmium				P
Calcium				P
Chromium				P
Cobalt				P
Copper				P
Iron				P
Lead				P
Magnesium				P
Manganese				P
Molybdenum				P
Nickel				P
Phosphorus				P
Selenium				P
Silver	1.9345	B		P
Strontium				P
Thallium				P
Titanium				P
Vanadium				P
Zinc				P
				P

Color Before:
Color After:

Clarity Before:
Clarity After:

Texture:

Artifacts:

Comments: Sample = 0.00 % Solids. Total Metals Digestion only!
EPA QC-7A Trace Metals Aqueous Reference Standard.
(External Control Standard).

236

ENTERED

FORM 1A-1

INORGANIC ANALYSIS DATA SHEET

Lab Name: Building 559 PA Inorganic Laboratories Sample No.: 2

Lab Sample ID: X-99A4089-001 Bldg 782 Solid Sample

Section: ICPAES

Lab Sample I.D.s beginning with X' indicates TCLP Extract.

% Solids for Sample : 100.0000

Date Sampled: 12/8/98 SDG No. : JAN05

Lab Receipt Date: 12/14/98 QC Report No.: SD010599.RPT

Matrix: Water ____ Soil ____ Sludge ____ Other X

Elements Identified and Measured

Concentration Units: mg/L

Analyte	Concentration	C	Q (N V * E O O S +)	M
Aluminum	0.9000	U		P
Antimony	0.3189	B		P
Arsenic	0.3000	U		P
Barium	0.2169	B		P
Beryllium	0.0150	U		P
Cadmium	0.0600	U		P
Calcium	113.1324	B		P
Chromium	0.1500	U		P
Cobalt	1.4133	B		P
Copper	0.3000	U		P
Iron	0.6000	U		P
Lead	62.4330			P
Magnesium	1.3311	B	E	P
Manganese	0.1929	B		P
Molybdenum	0.1500	U		P
Nickel	0.1500	U		P
Phosphorus	10.9944	B		P
Selenium	0.3000	U		P
Silver	0.0900	U		P
Strontium	0.4239	B		P
Thallium	0.3000	U		P
Titanium	0.0600	U		P
Vanadium	0.1500	U		P
Zinc	16.7907	B		P

Color Before: Orange Clarity Before: Cloudy

Color After: Colorless Clarity After: Clear

Texture:

Artifacts: White and red particulates left on TCLP Filter.

Comments: Sample = 100 % solids. Pressure filtration of the TCLP solids extract thro pressure filtration unit, containing a 0.7 micron borosilicate glass fiber filte to obtain the TCLP final sample extract.

237

Appendix E

RCRA Hazardous Substances

Results (Chemicals)

Sampling Required

Room	Item	Component	g/l Pu	Comments	RIN	Sample Numbers
East dock	Drum RO1444	oil	1.07E-07		98A2073	.001.001-.002
147	Leaded glass drum	glass	N/A	TCLP positive for lead and barium.	98A1284	.005.014
150	EB welder #23	vacuum pump	2.00E-08	Less than MDA.	98A1122	.003.007
150	EB welder #23, power supply	oil reservoir	6.50E-08		98A0409	.001.001
150	Pigma arc welder	vacuum pump	6.00E-09		98A1284	.006.016-017
150	EB welder #5	vacuum pump	9.00E-08		98A1123	0.001
150	EB welder #5	power supply	8.60E-08		98A0409	.002.004
150	Process cooling water	water	1.23E-07	TCLP positive for lead and chromium.	98A1284	.003.008-009
150	9 vacuum pumps	oil reservoir	2.37E-06		98A1284	.004.012-013
150	Pump removed from GB-864, Rm 160	oil reservoir	3.90E-08		98A1352	.001.001-002
150	Inert chamber (GB-022)	oil	8.70E-08		98A1160	.006.016
150	2-4 l bottles	oil	1.61E-07		99A9436	.001.001
152	GB-211	crit drain liquids	1.03E-05	TRU waste.	98A1350	.002.002
152	Diffusion pump, GB-211	oil reservoir	1.06E-05	TRU waste.	98A1350	.001.001
152	GB-211, roughing pump	oil reservoir	1.06E-05	In line with diffusion pump, same characterization.	98A1350	.001.001
152	(Inducto) furnace	water reservoir	5.00E-09		98A1685	.001.001-.002
152	(Inducto) furnace	glycol	3.39E-07	Confirmed as glycol.	98A2165	.001.001
152	Tensile tester, #328/013	hydraulic reservoir	3.00E-07		98A1675	.003.003
152	Filtered varsol		4.00E-07		98A1284	.008.020-.026
152	Paint chips		2.00E-10		98A1688	.001.001
152	Process cooling water	water	4.00E-09		98A2064	.005.001
152	GB-208/211	oiler	7.29E-07		98A2104	.001.001
152	Chemical	thorium oxide	1.10E-05		98A5013	.001.001-002

239

Sampling Required						
152	Hallway	paint	1.00E-10	TCLP only; no RCRA.	98A1688	.001.001
152A	Water wall doors	water	2.54E-07		98A2060	.002.001-002
154	2 pumps, GB-1363, middle	oil reservoirs	6.36E-04		98A5372	.003.001
154	1 pump, GB-1363, end	oil reservoir	5.11E-06		98A5454	.001.001
154	GB-1363, diffusion pump	oil reservoir	1.33E-04		98A5372	.001.001- 002
154	GB-1364	crit drain liquids	2.67E-06		98A1914	.016.002
154	GB-1364, diffusion pump	oil reservoir	1.44E-06		98A5372	.002.001- 002
154	2 pumps, GB-1364	oil reservoirs	3.54E-04		98A5372	.004.001
154	GB-1365	crit drain liquids	8.10E-04		98A1914	.015.002
154	GB-4933	crit drain liquids	7.38E-05		98A1914	.013.002
154	GB-7248	crit drain liquids	1.56E-03		98A1914	.014.002
154	Process cooling water	water, closed loop	1.80E-07		98A5396	.001.001; .002.001
154	Process cooling water	water	6.00E-09		98A5503	.001.001 .001.002
154	GB-4933	sweepings	1.95 g/g		98A1697	0.001
155	GB-218	crit drain liquids	4.01E-03	TRU waste.	98A1462	.006.006
155	Pump, GB-219	oil reservoir	1.25E-06		98A1462	.005.005
155	GB-222	crit drain liquids	4.82E-04		98A1462	.004.004
155	GB-223	crit drain liquids	5.03E-06		98A1462	.003.003
155	2 pumps, GB-223	oil reservoirs	2.67E-06		98A1462	.002.002
155	GB-224	crit drain liquids	2.33E-06		98A1462	.001.001
157	MTS hydraulic supply unit	oil	3.67E-06		98A1068	0.001
157	Tensile testing equipment (no. 328/013)	oil reservoir	3.00E-07		98A1675	.003.003
157	GB-222	crit drain liquids	1.70E-07		98A0876	.002.004
157	GB-223/224	crit drain liquids	2.50E-06		98A1324	.002.003-004
157	Process cooling water line inside GB-222	bottles with cooling water	1.20E-08	Greater than MDA.	98A1067	0.002

240

Sampling Required						
157	Press underneath GB-223/224	oil reservoir	1.60E-06		98A1819	.001.001
157	Exhaust line, GB-225	oil leak	N/A	Insufficient to sample.	N/A	N/A
157	GB-226	crit drain liquids	3.90E-08		98A1324	.001.001-002
157	Walls	paint sample	2.00E-10		98A1688	.001.001
160	GB-857	crit drain liquids	7.16E-06		98A1066	.005.009-010
160	GB-857, vacuum pump	oil reservoir	3.89E-06		98A1675	.005.005
160	GB-9858	pump oil reservoir	1.44E-07		98A1284	.001.002-003
160	GB-859	crit drain liquids	1.30E-06		98A1066	.004.007-008
160	GB-860	crit drain liquids	4.86E-07		98A1066	.003.005-006
160	GB-860	water wall, back of GB	2.10E-07		97P0898	.001.001
160	GB-860	internal water wall	3.54E-08		98A1804	.001.001-.002
160	GB-862	crit drain liquids	3.58E-03	TRU waste.	98A1066	.002.003-004
160	GB-864	crit drain liquids	3.00E-07		98A0859	.002.004-.006
160	GB-864, vacuum pump	oil reservoir	3.90E-08		98A1352	.001.001
160	GB-865	crit drain liquids	1.42E-02	TRU waste.	98A1066	.001.001-002
160	GB-865, vacuum pump	oil reservoir	3.70E-05		98A1674	.005.005
160	GB-866	crit drain liquids	1.48E-07		98A0859	.004.010
160	GB-9858, vacuum pump	oil reservoir	1.44E-06		98A1284	.001.002
160	Furnace under GB-864	water reservoir	1.00E-08		98A1160	.003.007-008
160	Chiller next to GB-863	water	6.00E-09		98A1160	.001.001
160	Chiller under GB-863	water	7.00E-09		98A1160	.002.004-.005
160	2 furnaces with pumps underneath	oil reservoir	1.27E-07		98A1362	.002.002
162	Jig bore (Moore #000-34970-00)	lubricating oil	1.34E-07		97P0954	.003.005
162	Lathe (South Bend #00036452-00)	gear oil	6.40E-08		97P0954	.007.013
162	Band saw	oil	4.00E-09	Free release.	97P0954	.002.003
162	Lathe reservoir	oil	1.00E-08	Free release alpha but not beta	97P0954	.004.007
162	Lathe reservoir	oil	7.30E-08	Free release.	97P0954	.010.019

241

Sampling Required						
162	Grinder/drill reservoir	oil	1.37E-07	Free release.	97P0954	012.023
162	Lathe reservoir	oil	1.00E-07	Free release alpha but not beta.	97P0954	.009.017

242

Appendix F
Waste and Environmental Management System
Area Location Report

Temporary Units

WEMS AREA LOCATION REQUEST FORM

1 ACTION REQUIRED (Circle one.) ADD (INACTIVATE) MODIFY RELOCATE

If action is ADD, complete of Sections 1, 2A, and 3 through 6.

If action is INACTIVATE, complete Sections 1, 2A, and 6. Also, ensure that no active waste packages still reside in this Area Location.

If action is MODIFY, complete Sections 1, 2A, and 6, and provide ONLY *information that has changes* in Sections 3, 4, and 5.

If action is RELOCATE, complete BOTH columns A and B in Section 2, and provide ONLY *information that has changed* in Sections 3, 4, and 5. Also complete Sections 1 and 6.

2 (A) AREA LOCATION (Current, New, or From) | (B) AREA LOCATION (To – Used for RELOCATE only.)

Building 779 Unit 2524 Room 152 | Building _____ Unit _____ Room _____

(If this request is applicable to a number of Area Locations, attach the list of affected Area Locations (Building/Unit/Room) to one completed, signed WEMS Area Location Request Form.) NOTE: If Area Location is offsite, also complete Addendum 1.

3 UNIT INFORMATION

Unit Type: _____ (Enter one Unit Type from List 1.)

RCRA Unit: ☐ Yes ☐ No (Please √.)

Exceeds U-235 Gram Limit: ☐ Yes ☐ No (Please √.) (Note: "Yes" indicates waste packages exceeding 15 grams U-235 cannot be stored in this unit.)

Area Description: _____
(Free form text field. Enter useful information.)

Area Volume: _____
(Optional. Enter storage capacity of Area Location and units of measure.)

Permit Status: (Please √ one.) ☐ N/A ☐ Permitted

Waste Description: _____
(Free form text field. Enter useful information.)

4 OWNERSHIP INFORMATION

Custodian

Custodian Employee Number: _____ (R, N, or Social Security Number)

Custodian Name: _____ (First, Middle Initial, Last)

Extension: _____ Pager: _____

(If the person has never been involved with WEMS, also provide the following information.)

Company Name: _____

Group: _____ Building: _____

[redacted]

5 WASTE INFORMATION

Waste Types: _____
(Enter ALL Waste Types allowed for storage in this Area Location, from List 2.)

Compatibility Codes: _____
(Enter ALL Compatibility Codes allowed for storage in this Area Location, from List 3.)

EPA Codes: _____
(Enter ALL EPA Codes allowed for storage in this Area Location.)

6 APPROVAL SIGNATURES

Unit Owner: KATHRYN ZBRIK / Kathryn Zbrik / 8-16-99
(Required for all requests.) Print Name / Signature / Date

I certify that the above mentioned regulated unit has been established or modified in compliance with the applicable permit, Consent Order, and/or regulatory requirements, and that the designated Unit Owner and Custodian are properly trained to conduct their duties.

Environmental Manager: T.A. HOPKINS / Ted A Hopkins / 8/17/99
Print Name / Signature / Date
(Required for requests for all Unit Types other than NRA and OFF.)

244

WEMS AREA LOCATION REQUEST FORM

1 ACTION REQUIRED (Circle one.) ADD (INACTIVATE) MODIFY RELOCATE

If action is ADD, complete of Sections 1, 2A, and 3 through 6.

If action is INACTIVATE, complete Sections 1, 2A, and 6. Also, ensure that no active waste packages still reside in this Area Location.

If action is MODIFY, complete Sections 1, 2A, and 6, and provide ONLY *information that has changes* in Sections 3, 4, and 5.

If action is RELOCATE, complete BOTH columns A and B in Section 2, and provide ONLY *information that has changed* in Sections 3, 4, and 5. Also complete Sections 1 and 6.

2 (A) AREA LOCATION (Current, New, or From) | (B) AREA LOCATION (To – Used for RELOCATE only.)

Building 779 Unit 2503 Room 160 | Building _____ Unit _____ Room _____

(If this request is applicable to a number of Area Locations, attach the list of affected Area Locations (Building/Unit/Room) to one completed, signed WEMS Area Location Request Form.) NOTE: If Area Location is offsite, also complete Addendum 1.

3 UNIT INFORMATION

Unit Type: _____
(Enter one Unit Type from List 1.)

RCRA Unit: ☐ Yes ☐ No (Please √.)

Exceeds U-235 Gram Limit: ☐ Yes ☐ No (Please √.)
(Note: "Yes" indicates waste packages exceeding 15 grams U-235 cannot be stored in this unit.)

Area Description: _____
(Free form text field. Enter useful information.)

Area Volume: _____
(Optional. Enter storage capacity of Area Location and units of measure.)

Permit Status: (Please √ one.) ☐ N/A ☐ Permitted

Waste Description: _____
(Free form text field. Enter useful information.)

4 OWNERSHIP INFORMATION

Custodian

Custodian Employee Number: _____
(R, N, or Social Security Number)

Custodian Name: _____
(First, Middle Initial, Last)

Extension: _____ Pager: _____

(If the person has never been involved with WEMS, also provide the following information.)

Company Name: _____

Group: _____ Building: _____

[redacted]

5 WASTE INFORMATION

Waste Types: _____
(Enter ALL Waste Types allowed for storage in this Area Location, from List 2.)

Compatibility Codes: _____
(Enter ALL Compatibility Codes allowed for storage in this Area Location, from List 3.)

EPA Codes: _____
(Enter ALL EPA Codes allowed for storage in this Area Location.)

6 APPROVAL SIGNATURES

Unit Owner: KATHRYN ZBRYK / Kathryn Zbryk / 8-16-99
(Required for all requests.) Print Name Signature Date

I certify that the above mentioned regulated unit has been established or modified in compliance with the applicable permit, Consent Order, and/or regulatory requirements, and that the designated Unit Owner and Custodian are properly trained to conduct their duties.

Environmental Manager: T.A. HOPKINS / Ted A Hopkins / 8/17/99
Print Name Signature Date

(Required for requests for all Unit Types other than NRA and OPF.)

246

94-DMR-001466

APPENDIX 2
Page 2 of 2

RFP Tracking # 3115
DOE # 6400.3
Page 1 of 2

ACCUMULATION REQUEST FORM
ADDITION/DELETION/MODIFICATION/RELOCATION/CUSTODIAN CHANGE
(Circle the appropriate request above)

Date Requested 10/1/98 Department 779 Tech. Supp.
Requested By M.H. Cambopot Building 779
Extension 6152

AREA INFORMATION
Assigned RCRA ID Number 779-2445 Area Type PSU
Building 779

(Complete Old Information column & only the modified item(s) in the new information column)

OLD INFORMATION	NEW INFORMATION
Room Number: 150, 152	Room Number: Delete: Rm. 152
Physical Description of Waste: Misc. Haz. Waste Gen. From DVS Activities	Physical Description of Waste:
Hazardous Constituent(s): D001-D043, F001-F005 Pu Series, U-Series	Hazardous Constituent(s):
EPA Code(s): ↑ ↑	EPA Code(s):
Compatibility Code(s): Various	Compatibility Code(s):
IDC/WFC/NA: Various	IDC/WFC/NA:
Volume Allowed: N/A	Volume Allowed:
Storage Unit Destination: N/A	Storage Unit Destination:
[redacted]	Custodian's Name:
	Custodian's Employee #:
Extension/Pager:	Extension/Pager:
Name of Unit Owner: M.H. Cambopot	Name of Unit Owner:

HAZ X LLM X TRM X REM ___ TSCA X (Check applicable waste type[s])

246

APPENDIX 2
Page 2 of 2

RFP Tracking # 3114
DOE # 5400.3
Page 2 of 2

If you are requesting a deletion or relocation of a 90-day Accumulation Area, check the operating record for a incident of a spill or release in the unit. Has a spill or release ever occurred in the unit? [Check (√) one Yes ____ No ____]. If Yes, see Section 1-A09-HWRM-15, in the Hazardous Waste Requirements Manual.

Has all waste been removed from the unit to be deleted [Check (√) one Yes ____ No ____]

Reason for Request: ADDITIONAL STORAGE SPACE NEEDED

New Custodian Signature _____ (if applicable)

Unit Owner Signature _____

Ops. Mgr. Signature _____ FOR E.P. SCHWEINSBERG 10/1/98

RCRA Regulatory Programs:

Approval Signature: _____ 10-1-98

Reviewed by: _____

Distribution:

	Mailing List:
Environmental Waste Assessments (EWA)	EWA, 013
Environmental Coordinator (EC)	M.H. CONCIGNE (FAX 2864)
Environmental Program Manager (EPM)	
Operations Manager (OM)	
RCRA Regulatory Prgm. Files (orig. and Copy)	RRP, 130C
RCRA Custodian	
Requestor	
Systems Quality Engineering (SQE)	SQE, 130J
Waste Environmental Management Sys. (WEMS)	WEMS, T664
Other	

94-DMR-001466

247

WEMS AREA LOCATION REQUEST FORM

1 ACTION REQUIRED (Circle one:) ADD (INACTIVATE) MODIFY RELOCATE

If action is ADD, complete of Sections 1, 2A, and 3 through 6.

If action is INACTIVATE, complete Sections 1, 2A, and 6. Also, ensure that no active waste packages still reside in this Area Location.

If action is MODIFY, complete Sections 1, 2A, and 6, and provide ONLY *information that has changed* in Sections 3, 4, and 5.

If action is RELOCATE, complete BOTH columns A and B in Section 2, and provide ONLY *information that has changed* in Sections 3, 4, and 5. Also complete Sections 1 and 6.

2 (A) AREA LOCATION (Current, New, or From) | (B) AREA LOCATION (To – Used for RELOCATE only.)

Building 779 Unit 2524 Room 152 | Building _____ Unit _____ Room _____

(If this request is applicable to a number of Area Locations, attach the list of affected Area Locations (Building/Unit/Room) to one completed, signed WEMS Area Location Request Form.) NOTE: If Area Location is offsite, also complete Addendum 1.

3 UNIT INFORMATION

Unit Type: _____
(Enter one Unit Type from List 1.)

RCRA Unit: ☐ Yes ☐ No (Please √.)

Exceeds U-235 Gram Limit: ☐ Yes ☐ No (Please √.)
(Note: "Yes" indicates waste packages exceeding 15 grams U-235 cannot be stored in this unit.)

Area Description: _____
(Free form text field. Enter useful information.)

Area Volume: _____
(Optional. Enter storage capacity of Area Location and units of measure.)

Permit Status: (Please √ one.) ☐ N/A ☐ Permitted

Waste Description: _____
(Free form text field. Enter useful information.)

4 OWNERSHIP INFORMATION

Custodian
Custodian Employee Number: _____
(R, N, or Social Security Number)
Custodian Name: _____
(First, Middle Initial, Last)
Extension: _____ Pager: _____
(If the person has never been involved with WEMS, also provide the following information.)

Company Name: _____
Group: _____ Building: _____

[redacted]

5 WASTE INFORMATION

Waste Types: _____
(Enter ALL Waste Types allowed for storage in this Area Location, from List 2.)

Compatibility Codes: _____
(Enter ALL Compatibility Codes allowed for storage in this Area Location, from List 3.)

EPA Codes: _____
(Enter ALL EPA Codes allowed for storage in this Area Location.)

6 APPROVAL SIGNATURES

Unit Owner: KATHRYN ZBRYK | Kathryn Zbryk | 8-16-99
(Required for all requests.) Print Name Signature Date

I certify that the above mentioned regulated unit has been established or modified in compliance with the applicable permit, Consent Order, and/or regulatory requirements, and that the designated Unit Owner and Custodian are properly trained to conduct their duties.

Environmental Manager: T.A. HOPKINS | Ted A Hopkins | 8/17/99
Print Name Signature Date

(Required for requests for all Unit Types other than NRA and OPF.)

248

94-DMR-001466

APPENDIX 2
Page 2 of 2

RFP Tracking # 3181
DOE # 5400.3
Page 1 of 2

ACCUMULATION REQUEST FORM

ADDITION/DELETION/MODIFICATION/RELOCATION/CUSTODIAN CHANGE
(Circle the appropriate request above)

Date Requested 1/5/99 mde
Requested By M.H. Conitogue
Extension X6652
Department 779 Tech Spt.
Building 779

AREA INFORMATION
Assigned RCRA ID Number 779-2445
Building 779
Area Type RTU

(Complete Old Information column & only the modified item(s) in the new information column)

OLD INFORMATION	NEW INFORMATION
Room Number: 150	Room Number:
Physical Description of Waste: Misc. Remediation Waste Generated During D&D Activities	Physical Description of Waste:
Hazardous Constituent(s): D001-D043 F001-F005 P-Series, U-Series	Hazardous Constituent(s):
EPA Code(s):	EPA Code(s):
Compatibility Code(s): Various	Compatibility Code(s):
IDC/WFC/NA: Various	IDC/WFC/NA:
Volume Allowed: N/A	Volume Allowed:
Storage Unit Destination: N/A	Storage Unit Destination:
[redacted]	Custodian's Name:
	Custodian's Employee #:
Extension/Pager: 2443	Extension/Pager:
Name of Unit Owner: M. Conitogue	Name of Unit Owner:

HAZ X LLM X TRM X REM ___ TSCA ___ (Check applicable waste type(s))

249

APPENDIX 2
Page 2 of 2

RFP Tracking # 3181
DOE # 5400.3
Page 2 of 2

If you are requesting a deletion or relocation of a 90-day Accumulation Area, check the operating record for a incident of a spill or release in the unit. Has a spill or release ever occurred in the unit? [Check (√) one Yes ____ No X]. If Yes, see Section 1-A09-HWRM-15, in the Hazardous Waste Requirements Manual.

Has all waste been removed from the unit to be deleted [Check (√) one Yes X No ____]

Reason for Request: No Longer Needed

New Custodian Signature ____ (If applicable)
Unit Owner Signature [signature]
Ops. Mgr. Signature [signature] for E.A. Schweinsberg

RCRA Regulatory Programs:

Approval Signature: [signature] 1-11-99

Reviewed by: ____

Distribution:	Mailing List:
Environmental Waste Assessments (EWA)	EWA, 013
Environmental Coordinator (EC)	M.H. Corlogue Fax 2864
Environmental Program Manager (EPM)	
Operations Manager (OM)	
RCRA Regulatory Prgm. Files (orig. and Copy)	RRP, 130C
RCRA Custodian	
Requestor	
Systems Quality Engineering (SQE)	SQE, 130J
Waste Environmental Management Sys. (WEMS)	WEMS, T664
Other	

94-DMR-001466

250

94-DMR-001466

APPENDIX 2
Page 2 of 2

RFP Tracking # 3187
DOE # 5400.3
Page 1 of 2

ACCUMULATION REQUEST FORM

ADDITION/DELETION/MODIFICATION/RELOCATION/CUSTODIAN CHANGE
(Circle the appropriate request above)

Date Requested 4/20/99
Requested By M.H. Conlogue
Extension 6152
Department 779 TECH SPRT.
Building 779

AREA INFORMATION
Assigned RCRA ID Number 779-2445
Building 779
Area Type PTU

(Complete Old information column & only the modified item(s) in the new information column)

OLD INFORMATION	NEW INFORMATION
Room Number: 155	Room Number:
Physical Description of Waste: Misc. Remediation Waste Generated During D&D Activities	Physical Description of Waste:
Hazardous Constituent(s): D001-D043 F001-F005 P-Series, U-Series	Hazardous Constituent(s):
EPA Code(s):	EPA Code(s):
Compatibility Code(s): Various	Compatibility Code(s):
IDC/WFC/NA: Various	IDC/WFC/NA:
Volume Allowed: N/A	Volume Allowed:
Storage Unit Destination: N/A	Storage Unit Destination:
[redacted]	Custodian's Name:
	Custodian's Employee #:
Extension/Pager: 2663	Extension/Pager:
Name of Unit Owner: M.H. Conlogue	Name of Unit Owner:

HAZ ✓ LLM ✗ TRM ✗ REM ___ TSCA ✗ (Check applicable waste type[s])

251

APPENDIX 2
Page 2 of 2

RFP Tracking # 3187
DOE # 5400.3
Page 2 of 2

If you are requesting a deletion or relocation of a 90-day Accumulation Area, check the operating record for a incident of a spill or release in the unit. Has a spill or release ever occurred in the unit? [Check (√) one Yes ____ No ____]. If Yes, see Section 1-A09-HWRM-15, in the Hazardous Waste Requirements Manual.

Has all waste been removed from the unit to be deleted [Check (√) one Yes X No ____]

Reason for Request: No Longer Needed

New Custodian Signature ____ (If applicable)
Unit Owner Signature ____
Ops. Mgr. Signature ____ For E.P. Schwartzberg 1/26/99

RCRA Regulatory Programs:

Approval Signature: ____ 1-26-99

Reviewed by: ____

Distribution:	Mailing List:
Environmental Waste Assessments (EWA)	EWA, 013
Environmental Coordinator (EC)	[illegible]
Environmental Program Manager (EPM)	
Operations Manager (OM)	
RCRA Regulatory Prgm. Files (orig. and Copy)	RRP, 130C
RCRA Custodian	
Requestor	
Systems Quality Engineering (SQE)	SQE, 130J
Waste Environmental Management Sys. (WEMS)	WEMS, T664
Other	

94-DMR-001499

252

Appendix G

Building 779 Glovebox Removal Checklist

RCRA UNITS

October 21, 1998

Building 779 Glovebox Removal Checklist
Fourth Set of 10 for Standard Performance Measure

Room	Glovebox	Property Control Number	Waste Crate Number	Removed YES	Removed NO
154	1363	00035952-00	S00321, S00322	X	
154	1364	00035953-00	S00273, S00327	X	
154	1365	00035954-00	S00301	X	
154	2025	00036103-00	S00302	X	
154	4933	00031310-00	S00338, S00319	X	
154	7248	00036047-00	S00027	X	
160	859	00036730-00	S00318, S00320	X	
160	863	00036491-00	S00301	X	
160	862	00036491-00	S00027	X	
160	860	00036615-00	S00283, S00357	X	

I certify that the Gloveboxes/Hoods/B-Boxes listed above have been removed from Building 779; placed in a waste crate, and have been placed in the RFETS waste stream for disposal.

Signature/K-H Title — Date: 10/22/98

Signature/DOE Title — Date: 10/22/98

254/254