NOTICE

All drawings located at the end of the document.

98714

CORRES. CONTROL
OUTGOING LTR NO.

DOE ORDER# 4700.1

95RF00426

DIST.		
AMARAL, M.E.		
BURLINGAME, A.H.		
BUSBY, W.S.		
BRANCH, D.B.		
CARNIVAL, G.J.		
DAVIS, J.G.		
FERRERA, D.W.		
FRAY, R.E.		
GEIS, J.A.		
GLOVER, W.S.		
GOLAN, P.M.		
HANNI, B.J.		
HARMAN, L.K.		
HEALY, T.J.		
HEDAHL, T.		
HILBIG, J.G.		
HUTCHINS, N.M.		
JACKSON, D.T.		
KELL, R.E.		
KUESTER, A.W.		
MARX, G.E.		
McDONALD, M.M.		
McKENNA, F.G.		
MONTROSE, J.K.		
MORGAN, R.V.		
POTTER, G.L.		
PIZZUTO, V.M.		
RISING, T.L.		
SANDLIN, N.B.		
SCHWARTZ, J.K.		
SETLOCK, G.H.		
STEWART, D.L.		
STIGER, S.G.	X	
TOBIN, P.M.		
VOORHEIS, G.M.		
WILSON, J.M.		
BECKMAN, T	X	
COLLINS, L	X	
GRENYS, T	X	
GLOE, K	X	
FILE	X	
CORRES. CONTROL	X	
ADMN RECORD/080	X	
TRAFFIC		
PATS/T130G		

CLASSIFICATION:

UCNI		
UNCLASSIFIED		
CONFIDENTIAL		
SECRET		

AUTHORIZED CLASSIFIER SIGNATURE
DOCUMENT CLASSIFICATION REVIEW WAIVER PER CLASSIFICATION OFFICE
DATE

IN REPLY TO RFP CC NO:

ACTION ITEM STATUS
☐ PARTIAL/OPEN
☐ CLOSED
LTR APPROVALS:

ORIG & TYPIST INITIALS

EG&G ROCKY FLATS

EG&G ROCKY FLATS, INC.
ROCKY FLATS PLANT, P.O. BOX 464, GOLDEN, COLORADO 80402-0464 • (303) 966-7000

January 11, 1995 95-RF-00426

F. R. Lockhart
Environmental Restoration Division
DOE, RFFO

TRANSMITTAL OF THE INVENTORY PONDCRETE PROCESSING CONCEPTUAL DESIGN WHITE PAPER - SRK-009-95

Action: None Required

EG&G Rocky Flats, Inc. Solar Pond Projects is hereby transmitting two (2) copies of the Inventory Pondcrete Processing Conceptual Design White Paper. Comments are not required or expected. This deliverable was received on schedule from the subcontractor to EG&G.

If you have any questions, please contact Leon Collins of my staff at 966-6968.

S. R. Keith
Program Manager
Solar Pond Projects

LAC:pjm

Enclosures:
As Stated(2)

Orig. and 1 cc-F. R. Lockhart

cc:
S. Howard - DOE, RFFO (SAIC)
M. A. Witherill - " " "

ADMIN RECORD

I101-A-00003

49111

ROCKY FLATS
SOLAR POND PROJECTS

INVENTORY PONDCRETE PROCESSING
CONCEPTUAL DESIGN

WHITE PAPER

PREPARED FOR:

EG&G ROCKY FLATS, INC.
GOLDEN, COLORADO

PREPARED BY:

HALLIBURTON NUS CORPORATION

JANUARY 6, 1995

Halliburton NUS
CORPORATION

D-1-95-4

ROCKY FLATS
SOLAR POND PROJECTS
INVENTORY PONDCRETE PROCESSING CONCEPTUAL DESIGN

WHITE PAPER

PREPARED FOR:

EG&G ROCKY FLATS, INC.
GOLDEN, COLORADO

PREPARED BY:

HALLIBURTON NUS CORPORATION
PITTSBURGH, PENNSYLVANIA

JANUARY 6, 1995

SUBMITTED BY:

RICHARD M. NINESTEEL, P.E.
PROJECT MANAGER

APPROVED BY:

DONALD R. BRENNEMAN
VICE PRESIDENT
CORPORATE SPONSOR

TABLE OF CONTENTS

SECTION		PAGE
1.0	**INTRODUCTION**	**1-1**
2.0	**BACKGROUND**	**2-1**
2.1	HISTORICAL PERSPECTIVE	2-1
2.2	REGULATORY FRAMEWORK	2-2
3.0	**DESIGN AND REGULATORY CONSIDERATIONS**	**3-1**
3.1	DESIGN CONSIDERATIONS	3-1
3.1.1	Waste Acceptance Criteria (WAC)	3-1
3.1.2	Characteristics of Pondcrete	3-2
3.1.3	Operating Parameters	3-3
3.2	REGULATORY CONSIDERATIONS	3-5
3.2.1	Status of Units of Interest	3-5
3.2.2	Regulatory Compliance Strategy	3-5
3.2.3	Other Compliance Requirements	3-6
3.2.4	Regulatory Criteria	3-7
3.2.5	Health and Safety Criteria	3-7
4.0	**VALUE ENGINEERING**	**4-1**
4.1	EVALUATION CRITERIA	4-2
4.1.1	Effectiveness	4-2
4.1.2	Implementability	4-2
4.1.3	Operability	4-3
4.1.4	Cost	4-3
4.2	DESCRIPTION AND SCREENING OF SIZE REDUCTION TECHNOLOGIES	4-4
4.2.1	Jaw Crushers	4-4
4.2.2	Roll Crushers	4-6
4.2.3	Hammer Mills	4-6
4.2.4	Impact Breakers	4-6
4.2.5	Disk Pulverizers	4-7
4.2.6	Pin Mills	4-7
4.2.7	Ball Mills	4-8
4.2.8	Auger-Screw Shredders	4-8
4.2.9	Ring-and-Pick Shredders	4-9
4.3	TREATMENT ALTERNATIVES SHORT-LIST	4-9
4.4	TREATMENT ALTERNATIVES DESCRIPTION	4-10
4.4.1	Treatment Alternative No. 1: Combined Dry Size Reduction and Mixing/Blending Treatment	4-11
4.4.2	Treatment Alternative No. 2: Dry Size Reduction Followed by Blending/Mixing Treatment	4-13
4.4.3	Treatment Alternative No. 3: Wet Size Reduction Followed by Mixing/Blending Treatment	4-15
4.5	TREATMENT ALTERNATIVES EVALUATION	4-18
4.5.1	Effectiveness	4-18
4.5.2	Implementability	4-18

TABLE OF CONTENTS (Continued)

SECTION		PAGE
4.5.3	Operability	4-20
4.5.4	Cost	4-22
4.6	RECOMMENDED TREATMENT ALTERNATIVE	4-23
5.0	**TREATMENT SYSTEM DESCRIPTION**	**5-1**
5.1	PONDCRETE TRANSFER	5-3
5.1.1	Operations Description	5-3
5.1.2	Operations Control	5-3
5.2	TREATMENT ADDITIVES STORAGE AND FEED	5-3
5.2.1	Operations Description	5-3
5.2.2	Operations Control	5-4
5.3	SIZE REDUCTION AND TREATMENT	5-5
5.3.1	Operations Description	5-5
5.3.2	Operations Control	5-7
5.4	TREATED WASTE STORAGE AND TESTING	5-8
5.4.1	Operations Description	5-8
5.4.2	Operations Control	5-9
5.5	TREATED WASTE TRANSFER TO OU-4	5-9
5.5.1	Operations Description	5-9
5.5.2	Operations Control	5-9
5.6	DECONTAMINATION AND DECOMMISSIONING	5-10
5.6.1	Description	5-10
5.6.2	Process and Operational Controls	5-10
6.0	**SCHEDULE**	**6-1**
7.0	**COST ESTIMATES**	**7-1**

TABLES

NUMBER		PAGE
1	Pondcrete Size Reduction Technologies Screening Summary	4-5
2	Pondcrete Treatment Value Engineering Evaluation Matrix	4-19
3	Pondcrete Treatment Alternatives Cost Estimates	4-22

FIGURES

NUMBER		PAGE
1	Process Block Flow Diagram, Treatment Alternative No. 1 Pondcrete	4-12
2	Process Block Flow Diagram, Treatment Alternative No. 2 Pondcrete	4-14
3	Process Block Flow Diagram, Treatment Alternative No. 3 Pondcrete	4-16
4	Conceptual Block Flow Diagram, Pondcrete Size Reduction and Treatment System	5-2

DRAWINGS

NUMBER		PAGE
1	Pondcrete Size Reduction and Treatment System Facilities Layout	3-4

EXECUTIVE SUMMARY

Halliburton NUS was contracted by EG&G Rocky Flats to generate a conceptual design to minimally treat inventory pondcrete, currently stored on the 750 pad, to acceptable standards to allow placement in the Operable Unit 4 closure area.

This White Paper, which is the first deliverable of the conceptual design, includes a Value Engineering Study that evaluated three potential pondcrete treatment alternatives to identify the treatment system that will satisfy the closure area waste acceptance criteria (WAC) in the most efficient, reliable, and cost-effective manner, given the operating constraints present at the Rocky Flats Plant. The Value Engineering Study consisted of a two-tiered evaluation process. The first-tier of the Value Engineering Study screened size reduction technologies based on effectiveness. Following this first-tier screening, a short list of treatment alternatives was developed. The treatment alternatives evaluated were:

- Treatment Alternative No. 1: Primary size-reduction and mixing/blending of treatment additives with an auger-screw shredder followed by secondary and tertiary size reduction and additional mixing/blending with two ring-and-pick shredders operating in series.

- Treatment Alternative No. 2: Primary, secondary, and tertiary size reduction with three ring-and-pick shredders operating in series. Mixing/blending of the size-reduced Pondcrete with treatment additives in a pug mill.

- Treatment Alternative No. 3: Primary size reduction with a ring-and-pick shredder. Secondary size reduction with a single ball mill operating in the slurry mode. Mixing/blending of the size-reduced Pondcrete with treatment additives in a pug mill.

The evaluation utilized the following criteria:

- Effectiveness (will the treated waste product meet the WAC?)

- Implementability (can the treatment system be installed in the space available? What impact does it have on the overall project schedule?)

1.0 INTRODUCTION

This White Paper has been generated by Halliburton NUS (HNUS) to satisfy the requirements of the Statement of Work (SOW) entitled "Accelerated Sludge Processing Conceptual Design, Sludge and Pondcrete Processing" (Revision 3), dated October 27, 1994. This SOW replaced the SOW entitled "Accelerated Sludge Processing Conceptual Design" (Revision 1), dated August 3, 1994.

The SOW, Revision 3, specifies that a conceptual design be developed to minimally treat inventory pondcrete presently stored on the 750 and 904 Pads, to an acceptable standard that will allow placement under the Operable Unit (OU)-4 cap. The SOW stipulated that the conceptual design be developed in two discrete deliverables, a White Paper and a Conceptual Design Report (CDR).

This White Paper, which is the first deliverable, provides a general design and engineering basis for a system that will treat the inventory pondcrete to the performance standards defined in the Draft Interim Measures/Interim Remedial Action Decision Document for disposal under the OU-4 cap. This White Paper also includes a value engineering study that will be used to select a recommended pondcrete processing system. This White Paper will be used to validate and confirm continued design development, and will serve as a basis for the CDR. The information provided in this document is preliminary in nature, pending the results of the pondcrete treatability study.

2.0 BACKGROUND

2.1 HISTORICAL PERSPECTIVE

Operable Unit Four (OU-4), the Solar Ponds, is an element of the United States Department of Energy's (USDOE) Environmental Restoration Program at the Rocky Flats Plant. OU-4 includes five solar evaporation ponds which were used to store and evaporate low-level radioactive process water starting in the late 1950s. Pond 207A was the largest of the evaporation ponds.

In June 1985, remediation of the sludges contained in Pond 207A began. After removal of the overlying supernatant, the sludges were slurried and pumped to a clarifier at Building 788 for thickening. The thickened sludge was blended with Portland Type I cement for stabilization. The resultant material, pondcrete, was cast into lined cardboard boxes which are referred to as tri-wall containers. The pondcrete was allowed to solidify in the tri-walls and then shipped offsite. The pondcrete was disposed at the Nevada Test Site (NTS) until the fall of 1986 when the pondcrete was identified as low level mixed waste. Subsequently, the tri-walls produced were stored on site on outdoor pads (904 Pad and 750 Pad), until production ceased in May 1988.

In late May 1988, site operations personnel discovered that several of the pondcrete tri-walls had deformed. Investigation revealed that in many cases, the pondcrete had not cured, or had not completely cured, or had cured and was deteriorating. In addition, some of the tri-wall containers were observed to be deteriorating. These occurrences were attributed to variation in the nature and behavior of the Pond 207A sludge, which resulted in the inconsistent achievement of the target operating parameters for the preparation of pondcrete. Therefore, the composition of the pondcrete varied in its proportions of water, sludge, and cement and physical properties varied accordingly.

At this point approximately 8100 tri-walls remain on-site in temporary storage enclosures on the 904 Pad. In addition, there are approximately 40 half crates and a small number of drums containing pondcrete. The pondcrete in these containers requires additional treatment prior to disposal. The hazardous waste codes that apply to the pondcrete are: D006, F001, F002, F003, F005, F006, F007 and F009.

As a protective measure, the tri-walls and their pallets have been bagged and placed on new pallets. Approximately 2500 of the tri-walls were found to have failed to solidify properly and were placed in metal

containers. The remaining tri-walls are also to be placed in metal containers, and this action is currently underway.

As part of the closure plans for OU-4, the sludges from the Solar Evaporation Ponds, including those sludges modified by the addition of cement to form pondcrete, are to be treated to satisfy specific waste acceptance criteria (WAC) and then placed in the OU-4 closure area and covered with a cap.

2.2 REGULATORY FRAMEWORK

The Rocky Flats Plant has multiple units regulated under the Resource Conservation and Recovery Act of 1976 (RCRA). The Solar Evaporation Ponds (207A, 207B, 207C) are interim status RCRA units. Paragraph 3008(h) of RCRA provides for the issuing of orders requiring corrective action for all releases of hazardous wastes or constituents from solid waste management units at interim status hazardous waste treatment, storage or disposal facilities.

The Rocky Flats Plant is also listed on the National Priorities List (NPL). The NPL is the list of sites that represent a potential threat to human health or the environment which was created and is periodically updated by the United States Environmental Protection Agency (USEPA) pursuant to Section 105 of the Comprehensive Environmental Response Compensation and Liability Act of 1980 (CERCLA). Section 120 of CERCLA requires remedies for Federal facilities sites on the NPL. Accordingly, the Rocky Flats Plant is subject to regulation under both RCRA and CERCLA.

An Interagency Agreement (IAG), signed by the USDOE, USEPA Region VIII, and the Colorado Department of Public Health and Environment (CDPHE) on January 22, 1991, with subsequent revisions, includes provisions for the remediation of contaminated sites at the Rocky Flats Plant under both RCRA and CERCLA. The IAG identifies sixteen Operable Units (OUs) ranked in order of decreasing risk to human health and the environment. The Solar Evaporation Ponds (207A, 207B, 207C), and Clarifier 788 are part of OU-4, indicating that the closure of these areas is a high priority. These impoundments within OU-4 have been designated as Individual Hazardous Substance Site (IHSS) 101.

The IAG also provides a process for the creation of an Interim Measure/Interim Remedial Action (IM/IRA) Decision Document (DD). An IM/IRA DD for closing the ponds was drafted in May 1994 for review by the regulatory community. The IM/IRA DD serves as the permitting mechanism for the facility. This White Paper and the CDR which is to follow, are to be folded into the IM/IRA DD. Upon finalizing the IM/IRA DD, the USDOE will submit a modification to the Part B Permit Application for Management of Hazardous Wastes that will reflect the contents of the IM/IRA DD.

The IAG requires the closure of OU-4 in two phases: Phase 1, which focuses on source control (characterization, removal and proper disposal of Solar Pond sludges and contaminated soils as well as closure of the Solar Ponds), and Phase 2 which addresses groundwater contamination and other concerns of the regulators. Accordingly, the preparation of this White Paper is one of the tasks to be performed within Phase 1.

3.0 DESIGN AND REGULATORY CONSIDERATIONS

3.1 DESIGN CONSIDERATIONS

Design and operational considerations for the pondcrete treatment processes are summarized in the following sections.

3.1.1 Waste Acceptance Criteria (WAC)

The revised waste acceptance criteria (WAC), which the treated waste must satisfy before it can be placed in the OU-4 closure area, were presented to HNUS by EG&G Rocky Flats on November 3, 1994. The provisions in the WAC that specifically impact design considerations for the pondcrete treatment system include:

- The treated waste shall have no free liquids as verified by the Paint Filter Liquid Test (SW 9095).

- If the treated waste is in a monolithic form, the following apply:

  - each monolith shall not exceed 12 in. x 24 in. x 48 in. in size, and shall not be reinforced.
  - compressive strength shall not exceed 3000 psi; shear and tensile strengths shall not exceed those of 3000 psi strength non-reinforced concrete.
  - non-returnable monolith molds, containers or packaging shall not be used.

- If the treated waste is in particulate form, all particles in the treated waste shall pass through a 3-inch mesh screen, and shall not agglomerate after treatment unless the agglomeration satisfies the requirements specified for monoliths.

- The treated waste shall not cause an exceedence of the particulate or monolith requirements when blended with site soils in the closure area.

- The treated waste shall be resistant to wind dispersion.

- Storage of the treated waste at the OU-4 closure area shall be minimized.

- The treated waste shall not be less protective of human health and the environment than the other materials selected for placement in the closure area.

- Pathogens, if present, shall be rendered innocuous.

- Any gas production from the treated waste shall be no greater than that generated by natural site soil.

3.1.2 Characteristics of Pondcrete

Pondcrete is a blend of cement and sludge material from the 207A Solar Evaporation Pond. The pond received wastes from numerous processes and the sludge contained numerous organic, inorganic, and radioactive contaminants which are therefore contained in the pondcrete. As part of the closure design process, it has been determined that the primary contaminants of concern are select metals and radionuclides.

The pondcrete blocks have been reported to vary in nature from liquid mud to dry clay. Most of the blocks are believed to be somewhat self supporting, like wet sand or mud. Sticky or gummy material is not believed to be present.

While the composition can vary widely, pondcrete typically consists of about 40 percent solids and 60 percent moisture. The solids include lumps of hydrated and unhydrated cement and lime. The compressive strength, as measured by field penetrometer, ranges from 0 to greater than 4.5 tons per square foot. The bulk density is approximately 1.3.

The pondcrete blocks are octagonal, with overall dimensions of approximately 39 inches by 39 inches with an estimated height of 22 inches. The maximum height to which the tri-walls were allowed to be filled was set at 17.5 inches, which corresponds to a volume of roughly 0.5 cubic yards. The weight of the pondcrete blocks ranges from 900 to 1300 pounds each.

The existing pondcrete blocks are packaged in a sealed 10 ml PVC bag within a three-piece, heavy cardboard container (tri-wall) and banded at the top, middle, and bottom for additional strength. The sides of the tri-wall container are octagonally shaped with a flat top and bottom. With few exceptions, the tri-walls rest on wooden pallets. Approximately 2500 of these triwalls were placed within larger, sealed containers referred to as metals. This step was taken as a protective measure for tri-walls in which the pondcrete had failed to solidify properly. Two to three tri-walls were placed within each metal.

The balance of the tri-walls were individually wrapped and sealed, along with their pallet within an additional 10 ml PVC bag. These assemblies were placed onto another wooden pallet for ease of handling. The wrapping materials for each pallet weigh approximately 100 pounds. The remaining tri-walls will also be placed in metals, which will hold two tri-walls each. Placement of the remaining tri-walls into metal containers will be completed before pondcrete reprocessing is ready to commence.

3.1.3 Operating Parameters

The daily operating schedule for the pondcrete reprocessing facility will be a function of:

- The total volume of pondcrete and the associated containment material that will require treatment.
- The available time period for operating (maximum 130 operating days).
- The requirements of the treatment mix formulation.
- The logistics of materials handling (pondcrete, treatment additives, and treated waste).
- Delays or operating interruptions form outside sources.

Based on information presented in previous sections regarding the volume and characteristics of the pondcrete, the estimated operating rate required to satisfy the 130-day operating schedule is no less than 32 metals (64 tri-walls) per day, which corresponds to approximately 32 cubic yards or 9400 pounds per day.

A conceptual layout of the proposed reprocessing facility, in relation to the pondcrete storage area and the OU-4 closure area, is included as Drawing 1.

Drawing 1 presents a facilities layout that shows the locations of the proposed pondcrete treatment system area, the pondcrete storage areas and the OU-4 closure area.

3.2 REGULATORY CONSIDERATIONS

3.2.1 Status of Units of Interest

The Rocky Flats Plant is undergoing a phased program of permitting under RCRA. The facility is applying for permitted status for various hazardous waste units in accordance with prioritization and a schedule negotiated with the CDPHE. Accordingly, Rocky Flats Plant operates under both interim and final (permitted) status. The 207A and 207B Solar Evaporation Ponds form one interim status unit within OU-4, 1HSS 101. Pad 904, an interim status unit within OU-10, 1HSS 213, will be used to support the OU-4 closure activities with respect to pondcrete reprocessing. This pad currently supports the tents that house the pondcrete blocks and will be used for the proposed pondcrete reprocessing equipment. Both operable units are to be closed separately under interim status.

3.2.2 Regulatory Compliance Strategy

To facilitate the timely processing and disposal of the pondcrete, the remedial design proposes to take advantage of modifications to 40 CFR Parts 264 and 265 promulgated by the USEPA on February 16, 1993, and the Colorado analog in 6 CCR 1007-3 promulgated on May 31, 1994. These rules allow for the creation of Corrective Action Management Units (CAMUs) and Temporary Units (TUs). These units "function solely to manage wastes that are generated at a RCRA facility for the purpose of implementing remedial actions required at that facility"... (FR Vol. 58, No. 29, p. 8659). Among other provisions, the rulemaking allows remediation wastes to be consolidated or processed on site without triggering Land Disposal Restrictions (LDRs) or Minimum Technology Requirements (MTRs) which were promulgated to control hazardous waste production from ongoing manufacturing activities. The requirements for the application of CAMUs and TUs are presented in 40 CFR 264 Subpart S, which addresses RCRA-permitted facilities. These requirements are incorporated by reference in 40 CFR 265.1(b) which addresses interim status facilities and which applies to the closure of the Solar Ponds. Colorado's rules substantively incorporate the intent and scope of the Federal rules with certain modifications which address the harmonizing of the CAMU and TU requirements with Colorado's existing hazardous waste rules, and which clarify ambiguities in the Federal rules.

Therefore, the following regulatory assumptions are made for design purposes:

- The pondcrete treatment equipment to be located in Tent 11 on 904 Pad will be a TU. (It is assumed that a CDPHE permit will be issued for this TU).

- The Solar Ponds will form a CAMU and will serve as the disposal site for the reprocessed pondcrete, along with sludges which have been removed from the ponds and treated, as well as contaminated soils from an adjacent area located outside the boundaries proposed for the CAMU.

In general, hazardous waste treatment units require secondary containment, with exemptions applied to certain types of facilities. The TU rule does not specifically address secondary containment requirements, leaving the determination of the applicable standards to Colorado. It is possible that the treatment system would be entitled to the exemptions provided in the regulations, even if there was no latitude provided in the application of standards. However, for purposes of this design, the following assumptions are made:

- The processing equipment will be provided with secondary containment.

- The pondcrete reprocessing equipment will be emptied prior to weekends, holidays, or extended downtime. In such cases, pondcrete in the reprocessing system will be processed until none remains.

- Secondary containment provisions will not be applied to treatment additive(s) since these materials are relatively immobile, and will be carefully contained. Similarly, secondary containment provisions will not be applied to the treated waste.

3.2.3 Other Compliance Requirements

Certain emissions and exposure restrictions apply to USDOE facilities which engage in the management of materials containing radionuclides. With respect to emissions, the National Emissions Standards for Emissions of Radionuclides Other Than Radon From Department of Energy Facilities apply (40 CFR 61.96). These standards specify limits for radionuclide levels in ambient air. In view of the low level of radioactivity associated with the pondcrete, an emissions impact and/or a significant air permitting effort are not anticipated to be necessary for this design. This matter will be reviewed with the Rocky Flats Plant air quality specialists during the preparation of the CDR and air permitting or monitoring requirements will be specified accordingly.

Applicable occupational exposure limits are addressed in USDOE Order 5480.11. These limits consider the exposures that may occur from all pathways, and relate to worker protection.

USDOE Order 5400.5 requires USDOE facilities and their contractors to implement As Low As Reasonably Achievable (ALARA) controls to emissions and discharges containing radionuclides. ALARA is a discretionary level of control that goes beyond regulatory requirements. For the purposes of this design, ALARA is applied to the control of dust emissions by covering potential sources and maintaining negative air pressure at those sources, and by applying High Efficiency Particulate Air (HEPA) Filters to all vents and exhausts from potential dust sources.

Since no liquid discharges are anticipated from the proposed treatment facility, no standards related to discharges will apply.

3.2.4 Regulatory Criteria

The following environmental regulatory criteria apply:

- TUs can operate for no more than one year. Therefore, the pondcrete must be completely processed within this period.

- Closure of the interim storage units is beyond the scope of this project.

3.2.5 Health and Safety Criteria

The following health and safety related criteria apply:

- A Health and Safety Plan (HASP), prepared in accordance with the ASRP Health and Safety Plan, will be required prior to any processing or placement of remediation wastes. The HASP will address medical monitoring requirements, industrial hygiene monitoring for heavy metals, and radiation dose monitoring.

- Operational guidance described in the HASP will be observed by the operators.

- Personal Protective Equipment will be worn by operators in accordance with the HASP.

- All operators will be provided with 40 hour hazardous materials training in accordance with 29 CFR 1910.120 prior to engaging in remediation activities.

- All operators will be provided with instruction in accordance with the Federal Hazard Communication Standard (29 CFR 1910.1200) prior to engaging in remediation activities.

- All operators will undergo site-specific radiation worker training prior to engaging in remediation activities.

All operations will be conducted in accordance with the USDOE Radiation Control Manual and the Rocky Flats Plant radiation protection requirements. This White Paper assumes that all Health & Safety monitoring required by the HASP will be performed by EG&G Rocky Flats.

4.0 VALUE ENGINEERING

The Pondcrete is stored in approximately 8,100 triwall containers and in approximately 40 half-crates and drums. Each triwall has a nominal volume and weight of about 15 cubic feet and 1,300 pounds, respectively. Approximately 2,600 of the triwalls have been overpacked in metal containers at two or three triwalls per container. The Pondcrete is currently in interim storage in Tents 8 through 11, located on the 904 Pad. This Pondcrete will be removed from storage, size-reduced to 0.5-inch or smaller, treated with a pozzolanic agent mix of lime and cement to adsorb any free moisture and destroy any pathogens or gas-producing micro-organisms, and mixed with a bulking agent such as sand or other additive to produce a friable treated waste which satisfies the WAC for the "Contaminated Media" layer of the OU-4 Interim Remedial Action (IRA) closure area (see Section 3.0).

The Pondcrete treatment system will consist of the following operations:

- Transfer of the Pondcrete from interim storage to size reduction and treatment
- Storage and feeding of treatment additives
- Pondcrete size reduction and mixing/blending treatment with additives
- Treated waste storage and testing
- Treated waste transfer to OU-4 closure area

In this section of the White Paper, a Value Engineering Study is conducted to identify a recommended treatment alternative. This Value Engineering Study consists of a two-tiered evaluation process. The first-tier of the Value Engineering Study is a screening of size reduction technologies based on effectiveness. Following this first-tier screening, a short list of treatment alternatives is developed, incorporating size reduction technologies which passed the initial screening process together with the preferred mixing/blending technology selected as a result of the Value Engineering Study performed for the December 1994 "Rocky Flats Solar Ponds Projects, Accelerated Sludge Processing Conceptual Design White Paper, Revision 1". The second-tier of the Value Engineering Study is an evaluation of the short-listed treatment alternatives based on effectiveness, implementability, operability, and cost.

In the following sections, the evaluation criteria are described in further detail; the candidate size reduction technologies are described and screened, a short-list of treatment alternatives is developed, the short-listed treatment alternatives are described and evaluated, and a preferred treatment alternative is identified.

4.1 EVALUATION CRITERIA

The criteria used for the initial screening of Pondcrete size reduction technologies is effectiveness.

The criteria used for the evaluation of the short-listed Pondcrete treatment alternatives are as follows:

- Effectiveness
- Implementability
- Operability
- Cost

4.1.1 Effectiveness

The effectiveness of each Pondcrete size reduction technology was evaluated on the basis of its ability to handle and reduce in size to less than 0.5-inch materials with the physical characteristics (i.e., moisture content and texture) and dimensions of the Pondcrete triwalls and half-crates, including wrapping and support pallets.

The effectiveness of each short-listed Pondcrete treatment alternative was evaluated by determining its ability to produce a treated waste which will meet the WAC as defined in Section 3.1.

4.1.2 Implementability

The implementability of each short-listed Pondcrete treatment alternative was evaluated by determining in general how easily and rapidly it could be installed and put into operation. In particular, the following specific factors were taken into consideration:

- The overall areal and vertical dimensions of the treatment equipment involved were compared to the floor space and overhead clearances available to determine how well this equipment would fit within the required space.

- The electrical power requirements of the treatment equipment were estimated to determine how easily they could be satisfied.

- The availability and procurement lead times of the treatment equipment was determined by contacting potential vendors to assess their potential impact on the overall project schedule.

- The treatment process itself was evaluated to determine whether its technical feasibility and effectiveness could be readily tested by the treatability study as planned or if significant treatability testing (and therefore schedule) changes would be required.

4.1.3 Operability

The operability of each short-listed Pondcrete treatment alternative was evaluated by determining in general how simple it would be to operate, control, and maintain. In particular, the following specific factors were taken into consideration:

- The sensitivity of the treatment process to changes, such as waste composition, waste flow, and additive feed rate, was evaluated to determine under how wide of a range of operational conditions it could perform effectively and produce an acceptable treated waste.

- The complexity of the treatment process and equipment was assessed to determine how difficult it would be to properly operate. As part of this factor, the amount of operational supervision required was also determined as well as the necessary level of operating personnel skill and the need for special training.

- The reliability of the treatment equipment and controls was evaluated to assess the potential for malfunctioning and breakdown, to determine the need for spare/stand-by equipment, and to estimate expected down-time.

- The maintenance requirements of the treatment equipment were evaluated to determine the amount and frequency of maintenance required, the level of skill of maintenance personnel, the need for special training, and the amount of spare parts and/or special tools necessary.

- The decommissioning of the treatment equipment was evaluated to establish the technical complexity and labor requirements of this decommissioning, the need for special health and safety considerations, and the means of ultimate equipment disposal.

4.1.4 Cost

Budget-type estimates were prepared to compare the relative capital expenditures and operating and maintenance costs of the various short-listed Pondcrete treatment alternatives.

4.2 DESCRIPTION AND SCREENING OF SIZE REDUCTION TECHNOLOGIES

Evaluation of the effectiveness of Pondcrete size reduction technologies is based on current Pondcrete characterization results, in-house knowledge of these technologies, equipment vendors recommendations, and results of previous tests with surrogate Pondcrete material. The following size reduction technologies were screened for effectiveness:

- Jaw Crushers
- Roll Crushers
- Hammer Mills
- Impact Breakers
- Disk Pulverizers
- Pin Mills
- Ball Mills
- Auger-Screw Shredders
- Ring and Pick Shredders

A summary of the Pondcrete size reduction technology screening is presented on Table 1.

4.2.1 Jaw Crushers

Description: Jaw crushers typically consist of two vertical, or near-vertical, opposing plates, or "jaws", in between which the material to be crushed is compressed. One of the plates is normally stationary at a slight angle with the vertical while the other is moved back and forth by a cam and fly wheel mechanism.

Effectiveness: Jaw crushers could handle objects with the dimensions of the Pondcrete triwalls or half-crates and reduce them to a size of 0.5-inch or less with about 3 stages operating in series. Jaw crushers work best with a hard and friable material and would not perform well with the relatively soft and moist material typical the majority of the Pondcrete or with the plastic wrapping and wooden pallets. There would be a tendency for this kind of material to "pancake" between the jaws, resulting in poor size reduction and frequent unit jamming.

Screening: Because of their inability to effectively reduce the size of materials with the physical characteristics of the Pondcrete, or materials such as plastic sheeting and wood boards, jaw crushers are eliminated from further consideration.

TABLE 1

PONDCRETE SIZE REDUCTION TECHNOLOGIES SCREENING SUMMARY

Technology	Effectiveness	Screening
Jaw Crushers	• Can Handle Objects with Triwalls and Half-Crates Dimensions and Reduce to -0.5" • Will Not Size Reduce Moist/Soft Materials, Cardboard & Plastic Wrapping, Wood	Eliminated
Roll Crushers	• Can Handle Objects with Triwalls and Half-Crates Dimensions and Reduce to -0.5" • Will Not Size-Reduce Moist/Soft Materials, Cardboard & Plastic Wrapping, Wood	Eliminated
Hammer Mills	• Can Handle Objects with Triwalls and Half-Crates Dimensions and Reduce to -0.5" • Will Not Size-Reduce Cardboard & Plastic Wrapping, Wood	Eliminated
Impact Breakers	• Can Handle Objects with Triwalls and Half-Crates Dimensions and Reduce to -0.5" • Will Not Size-Reduce Moist/Soft Materials, Cardboard & Plastic Wrapping, Wood	Eliminated
Disk Pulverizers	• Requires Primary and Secondary Size Reduction to -2" • Will Size-Reduce Moist/Soft Materials, Cardboard & Plastic Wrapping, Wood	Eliminated
Pin Mills	• Requires Primary and Secondary Size Reduction to -2" • Will Not Size-Reduce Cardboard & Plastic Wrapping, Wood	Eliminated
Ball Mills	• Requires Primary Size Reduction to -6" • Will Size-Reduce Moist/Soft Materials, Cardboard & Plastic Wrapping, Wood	Retained
Auger-Screw Shredders	• Can Handle Objects with Triwalls and Half-Crates Dimensions and Reduce to -6" • Will Size-Reduce Moist/Soft Materials, Cardboard & Plastic Wrapping, Wood	Retained
Ring-and-Pick Shredders	• Can Handle Objects with Triwalls and Half-Crates Dimensions and Reduce to -0.5" • Will Size-Reduce Moist/Soft Materials, Cardboard & Plastic Wrapping, Wood	Retained

4.2.2 Roll Crushers

Description: Roll crushers typically consist of two horizontal, counter-rotating, smooth or lugged, cylindrical rolls between which the material to be crushed is fed. Roll crusher can also feature a single roll with a stationary breaker plate.

Effectiveness: Roll crushers could handle objects with the dimensions of the Pondcrete triwalls or half-crates and reduce them to a size of 0.5-inch or less with about 7 stages operating in series. Roll crushers work best with hard friable material and would not perform well with the relatively soft and moist material typical the majority of the Pondcrete or with the plastic wrapping and wooden pallets. There would be a tendency for the Pondcrete to simply squeeze through the rolls with little or no size reduction.

Screening: Because of their inability to effectively reduce the size of materials with the physical characteristics of the Pondcrete, or materials such as plastic sheeting and wood boards, roll crushers are eliminated from further consideration.

4.2.3 Hammer Mills

Description: Hammer mills typically consist of a rotating shaft equipped with pivot arms or "hammers" which swing around hitting and breaking-up incoming feed materials.

Effectiveness: Hammer mill could handle objects with dimensions similar to the Pondcrete triwalls and half-crates and reduce them to a size of 0.5-inch or less with about 3 stages operating in series. A hammer mill was tested by a vendor (Telsmith) using a Pondcrete surrogate consisting of a cardboard box full of gravel, wrapped in a plastic liner, and placed on a pallet. Results from that test showed that hammer mills could not effectively reduce the size of the plastic liner or pallet.

Screening: Because of their inability to effectively reduce the size of materials such as plastic sheeting or wooden boards, hammer mills are eliminated from further consideration.

4.2.4 Impact Breakers

Description: Impact breakers typically consist of a high-speed rotating driver roll which picks up an incoming object and shatter it against one or more breaker plates.

Effectiveness: Impact breakers could handle objects with the dimensions of the Pondcrete triwalls or half-crates and reduce them to a size of 0.5-inch or less with about 3 stages operating in series . Impact breakers work best with hard friable material and would only be moderately effective with the relatively soft and moist material typical of the majority of the Pondcrete and largely ineffective with the plastic wrapping and wooden pallets. There would be a strong tendency for the equipment to jam relatively frequently with wood and plastic debris.

Screening: Because of their inability to effectively reduce the size of plastic sheeting and wood boards, impact breakers are eliminated from further consideration.

4.2.5 Disk Pulverizers

Description: Disk pulverizers typically consist of a high-speed rotating disk bearing on a stationary plate which abrades or crushes the incoming feed material.

Effectiveness: Disk pulverizers would require primary and secondary size-reduction to handle objects with the dimensions of the Pondcrete triwalls or half-crate as they can only handle particle sizes of 2-inch or less. A single stage disk pulverizer would be required to reach a product particle size of less than 0.5-inch. Disk pulverizers could perform effectively with the relatively soft and moist material typical of the majority of the Pondcrete and with the wooden pallets and the plastic wrapping. Disk pulverizers would have to be operated in a wet mode because, in the dry mode, the heat generated by the abrasion process would ignite the plastic and wood materials.

Screening: Because they require primary and secondary size reduction and because they must be used in the wet mode, disc pulverizers are eliminated from further consideration.

4.2.6 Pin Mills

Description: Pin mills typically consist of a very high-speed (up to 10,000 rpm) rotating horizontal disk equipped with vertical arms or "pins" which impact incoming feed materials breaking them up and flinging them against the unit shell which completes the size reduction process.

Effectiveness: Pin Mills would require primary size-reduction to handle objects with the dimensions of the Pondcrete triwalls or half-crate as they can only handle particle sizes of 6-inch or less. About 2 stages operating in series would be required to reach a particle size of less than 0.5-inch. A pin mill was tested as a secondary size reduction device by a vendor (Sturdevant) using a Pondcrete surrogate consisting of

surrogate Pondcrete which had previously undergone primary size reduction. Results from that test showed that pin mills could handle this type of materials but could not effectively reduce the size of the plastic liner or wooden pallet. There was also a tendency for the plastic sheeting to wrap around the pins.

Screening: Because of their inability to effectively reduce the size of plastic sheeting and because they can only be used secondary size reduction devices, pin mills are eliminated from further consideration.

4.2.7 Ball Mills

Description: Ball mills typically consist of a horizontal rotating cylinder loaded with forged steel balls which rise and fall inside the cylinder as it rotates. The material to be size reduced is introduced at one end of the cylinder and collected at the other and, as it goes through the unit, it is progressively broken down or abraded by the tumbling action of the steel balls. Periodically. new steel balls are added to replace those worn out by the size reduction process.

Effectiveness: Ball Mills would require primary size-reduction to handle objects with the dimensions of the Pondcrete triwalls or half-crate as they can only handle particle sizes of 6-inch or less. Only one stage would be required to reach a particle size of less than 0.5-inch. A ball mill was tested as a secondary size reduction device by a testing laboratory (Hazen Research) using a pilot test mill (Allis Mineral Systems) with a Pondcrete surrogate which had previously undergone primary size reduction to less than 6-inch. Results from that test showed that the ball mill could effectively reduce the size of these types of materials. However, ball mills had to be operated in a slurry mode to avoid the re-agglomeration of the moist Pondcrete particles as a result of the rolling action of the unit.

Screening: Although they can only be used as secondary size reduction devices and although they must be used in the slurry mode, ball mills are retained for further consideration.

4.2.8 Auger-Screw Shredders

Description: Auger-screw shredders typically consist of two or more cylindrical or tapered augers positioned in parallel under a feed hopper. Augers generally counter-rotate and rotation may be reversed to facilitate movement through or to dislodge wedged-in material. Size reduction is achieved by the scissoring, crushing, and pinching action of the augers against each other and against the sides of the unit. Auger-screw shredders can also be fitted with an outlet trap-door to retain the material being shredded inside the unit until the desired size reduction is achieved.

Effectiveness: Auger-screw shredders could handle objects with the dimensions of the Pondcrete triwalls and half-crates and reduce them to a size of about 6-inch in a single stage. Surrogate tests have shown that secondary auger-screw shredders can produce 1 to 2 inch size material. An auger-screw shredder was tested as a primary and secondary size reduction device by a vendor (Komar) using a Pondcrete surrogate consisting of a triwall cardboard box full of cast cement grout, wrapped in a plastic liner, and placed on a pallet. Results from that test showed that auger-screw shredders could effectively reduce the size of these types of materials. In addition, auger-screw shredders can be used to blend materials after size-reduction.

Screening: Because they are effective as primary and secondary size reduction devices, auger-screw shredders are retained for further consideration.

4.2.9 Ring-and-Pick Shredders

Description: Ring-and-pick shredders typically consist of two or more horizontal counter-rotating shafts positioned in parallel at the same elevation. Each shaft is equipped with multiple picks and rings mounted in an alternating pattern so that the picks on one shaft are mounted opposite of the rings on the other. Size reduction is achieved when the picks of one shaft grab the material to be shredded and shear it between the rings of the opposite shaft or on stationary plates mounted on the sides of the unit.

Effectiveness: Ring-and-pick shredders could handle objects with the dimensions of the Pondcrete triwalls and half-crates and reduce them to a size of 0.5-inch or less with about 3 stages operating in series. A ring-and-pick shredder was tested by a vendor (SSI) using a Pondcrete surrogate consisting of a cardboard box full of 1,000 psi cast cement grout, wrapped in a plastic liner, and placed on a pallet. Results from that test showed that ring-and-pick shredders could effectively reduce the size of these types of materials if the primary stage was equipped with a positive feed device (hydraulic ram).

Screening: Ring-and-pick shredders are retained for further consideration.

4.3 TREATMENT ALTERNATIVES SHORT-LIST

Pondcrete treatment is made-up of two main process components: 1) size reduction and 2) blending/mixing of the size-reduced material with additives to produce a treated waste which meets the WAC.

Based on the results of the size reduction technology screening as discussed in section 4.2 of this White Paper, three size-reduction technologies were retained for further consideration, including:

- Ball Mills
- Auger-Screw Shredders
- Ring-and-Pick Shredders

Based on the results of the of the Value Engineering Study performed for the December 1994 "Rocky Flats Solar Pond Projects, Accelerated Sludge Processing Conceptual Design White Paper, Revision 1" (Section 4.0), pug mills were identified as the preferred technology for the mixing/blending of treatment additives with the solar pond sludge and, by extension, this technology was also the one retained for inclusion in the short-listed Pondcrete treatment alternatives.

By combining the above-selected technologies, a short-list of three Pondcrete treatment alternatives was developed for further evaluation. These alternatives include:

- Treatment Alternative No. 1: Primary size-reduction and mixing/blending of treatment additives with an auger-screw shredder followed by secondary and tertiary size reduction and additional mixing/blending with two ring-and-pick shredders operating in series.

- Treatment Alternative No. 2: Primary, secondary, and tertiary size reduction with three ring-and-pick shredders operating in series. Mixing/blending of the size-reduced Pondcrete with treatment additives in a pug mill.

- Treatment Alternative No. 3: Primary size reduction with a ring-and-pick shredder. Secondary size reduction with a ball mill operating in the slurry mode. Mixing/blending of the size reduced Pondcrete with treatment additives in a pug mill.

4.4 TREATMENT ALTERNATIVES DESCRIPTION

Following are conceptual designs and brief process descriptions for the short-listed Pondcrete treatment alternatives which have been selected for second-tier evaluation. For the purpose of this evaluation, it is assumed that, regardless of the treatment alternative, the Pondcrete would be removed from storage in Tents 8, 9, and 10 and transferred for treatment in Tent 11 in the manner as described in Section 5.1.1 of this White Paper. It is also assumed that, regardless of treatment alternative, the treated Pondcrete will be staged, tested, and transferred to the OU-4 Closure Area in the manner described in Sections 5.4.1 and 5.5.1

of this White Paper. Accordingly the following subsections will only describe the treatment processes themselves.

4.4.1 Treatment Alternative No. 1: Combined Dry Size Reduction and Mixing/Blending Treatment

A block flow diagram of Treatment Alternative No. 1 is provided on Figure 1. Treatment Alternative No. 1 consists of three stages. In the first stage, the size of the Pondcrete is reduced to 6-inch or less and it is mixed with a bulking agent and pozzolanic mix. In the second and third stages, the size of the Pondcrete is progressively reduced, first to 2-inch or less then to 0.5-inch or less, and further mixing/blending with the treatment additives occurs.

The system for Treatment Alternative No. 1 consists of two Additive Storage and Feed Units (ASFUs) and one Size Reduction and Treatment Unit (SRTU).

One of the ASFUs stores and feeds a bulking agent and the other stores and feeds a pozzolanic mix. Each ASFU consists of a Storage Silo (T-1 or T-2) and an Additive Feed System (AFS-1 or AFS-2). the configuration of each Storage Silo is vertical/cylindrical with a 60° cone-bottom. Each silo is equipped with a pneumatic unloading connection, level sensing devices, and a passive dust control device. Each Additive Feed System consists of a variable-speed rotary feeder, a weigh-belt conveyor, and a screw feeder. For each ASFU, the additive is delivered to the site and unloaded into the storage silo by a bulk transport truck equipped with a pneumatic delivery system. The additive is unloaded from the bottom of the storage silo by the rotary feeder onto the weigh-belt conveyor which automatically adjusts the speed of the rotary feeder to provide the desired rate of additive feed. The controlled quantity of additive is then transferred to the delivery point by a screw conveyor. The delivery point for both the bulking agent and the pozzolanic mix is in the Primary Size Reduction and Mixing System of the SRTU.

The SRTU consists of one primary Size Reduction and Mixing System (SRM-1), one secondary Size Reduction and Mixing System (SRM-2), one tertiary Size Reduction and Mixing System (SRM-3), three (Primary, Secondary, Tertiary) Screw Conveyors (SC-1 through SC-3), one Treated Waste Container Jockey System (JS-1), and one Dust Collector System (DCS-1). The SRTU is operated in a batch fashion with a typical batch consisting of two or three Pondcrete triwalls or one Pondcrete half-crate. The Primary Size Reduction and Mixing System consists of an auger-screw shredder which reduces the size of the Pondcrete to 6-inch or less and mixes it with the desired amount of bulking agent and pozzolanic mix. The discharge of the Primary Size Reduction and Mixing System is transferred by the Primary Screw Conveyor to the Secondary Size Reduction and Mixing System which consists of a ring-and-pick shredder and reduces the size of the Pondcrete/additive mix to 2.0-inch or less and provides additional blending action. The

ACAD: C:\ROCKY1.DWG 01/06/95 TR

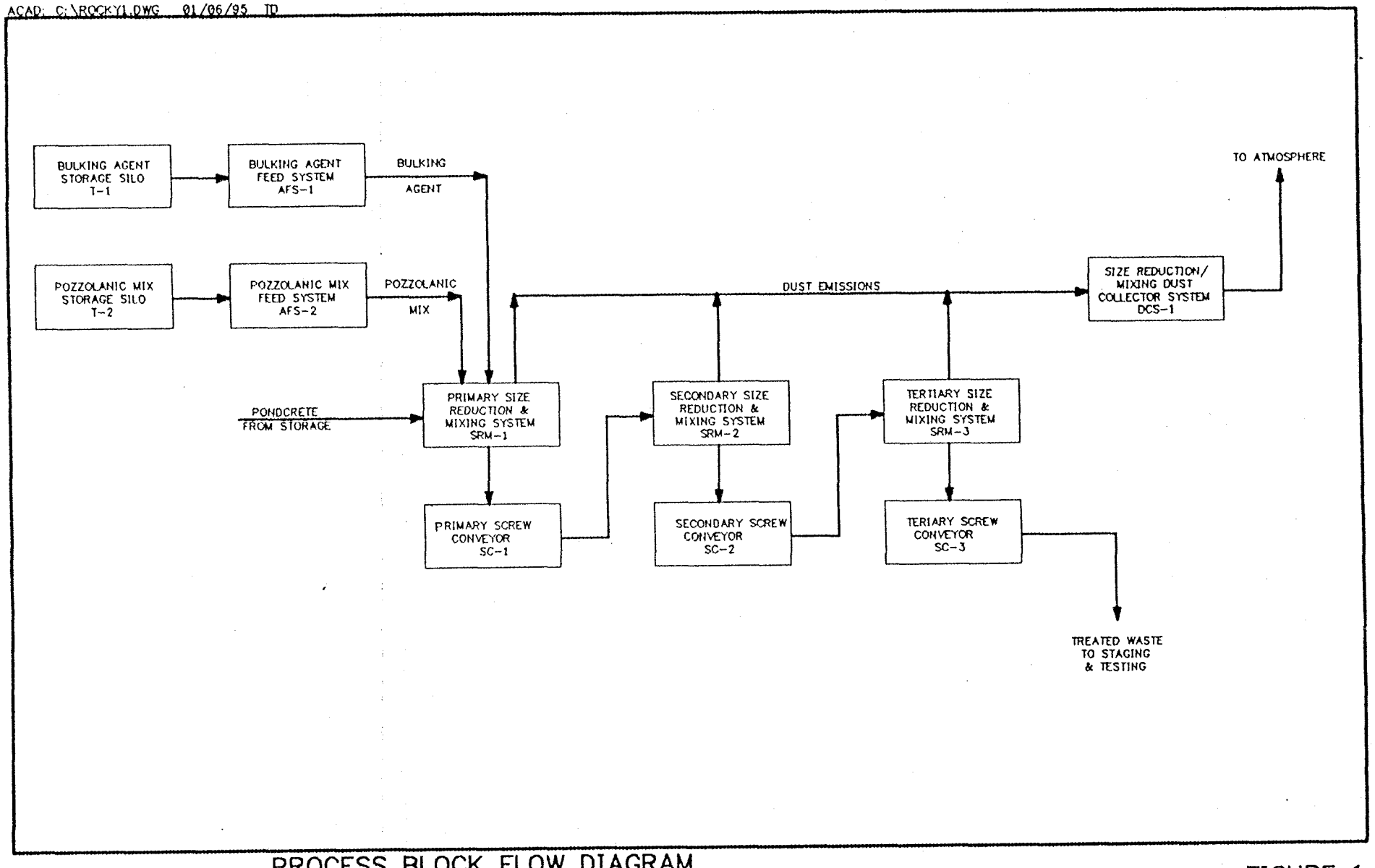

PROCESS BLOCK FLOW DIAGRAM
TREATMENT ALTERNATIVE No. 1
PONDCRETE
EG&G ROCKY FLATS, GOLDEN, COLORADO

FIGURE 1

Halliburton NUS CORPORATION

discharge of the Secondary Size Reduction and Mixing System is transferred by the Secondary Screw Conveyor to the Tertiary Size Reduction and Mixing System which consists of a ring-and-pick shredder and reduces the size of the Pondcrete/additive mix to 0.5-inch or less and provides additional blending action. The treated waste discharging from the Tertiary Size Reduction and Mixing System is transferred by the Tertiary Screw Conveyor to a storage container. The Treated Waste Container Jockey System slowly moves the storage container along a short length of tracks with a winch and pulley system to evenly distribute the treated waste inside that container. Dust generated by the size reduction and mixing/blending operations is captured by a Dust Collector System consisting of a bag-house collector, an exhaust fan, and a HEPA-type exhaust air filter. Excess dust accumulated in the collector is periodically removed for re-processing.

4.4.2 Treatment Alternative No. 2: Dry Size Reduction Followed by Blending/Mixing Treatment

A block flow diagram of Treatment Alternative No. 2 is provided on Figure 2. Treatment Alternative No. 2 consists of four stages. In the first three stages, the size of the Pondcrete is progressively reduced, first to 6-inch or less, then to 2-inch or less, and finally to 0.5 inch or less. In the fourth stage, the size-reduced Pondcrete is mixed with a bulking agent and pozzolanic mix.

The system for Treatment Alternative No. 2 consists of two Additive Storage and Feed Units (ASFUs), one Size Reduction Unit (SRU), and one Mixing Treatment Unit (MTU).

One of the ASFUs of Treatment Alternative No. 2 stores and feeds a bulking agent and the other stores and feeds a pozzolanic mix. The equipment and operation of these ASFUs are identical to those described in Section 4.4.1 of this White Paper for Treatment Alternative No.1 ASFUs. The delivery point of the both the bulking agent and the pozzolanic mix is in the Mixing/Blending System of the MTU.

The SRU consists of one primary Size Reduction System (SRS-1), one secondary Size Reduction System (SRS-2), one tertiary Size Reduction System (SRS-3), three (Primary, Secondary, Tertiary) Screw Conveyors (SC-1 through SC-3), and one Size Reduction Dust Collector System (DCS-1). The SRU is operated in a batch fashion with a typical batch consisting of two or three Pondcrete triwalls or one Pondcrete half-crate. The Primary Size Reduction System consists of a ring-and-pick shredder which reduces the size of the Pondcrete to 6-inch or less. The discharge of the Primary Size Reduction System is transferred by the Primary Screw Conveyor to the Secondary Size Reduction System which consists of a ring-and-pick shredder and reduces the size of the Pondcrete to 2.0-inch or less. The discharge of the Secondary Size Reduction System is transferred by the Secondary Screw Conveyor to the Tertiary Size Reduction System which consists of a ring-and-pick shredder and reduces the size of the Pondcrete to 0.5-inch or less. The size-reduced Pondcrete discharging from the Tertiary Size Reduction System is transferred by the Tertiary

ACAD: C:\ROCKYL.DWG 01/06/95 JD

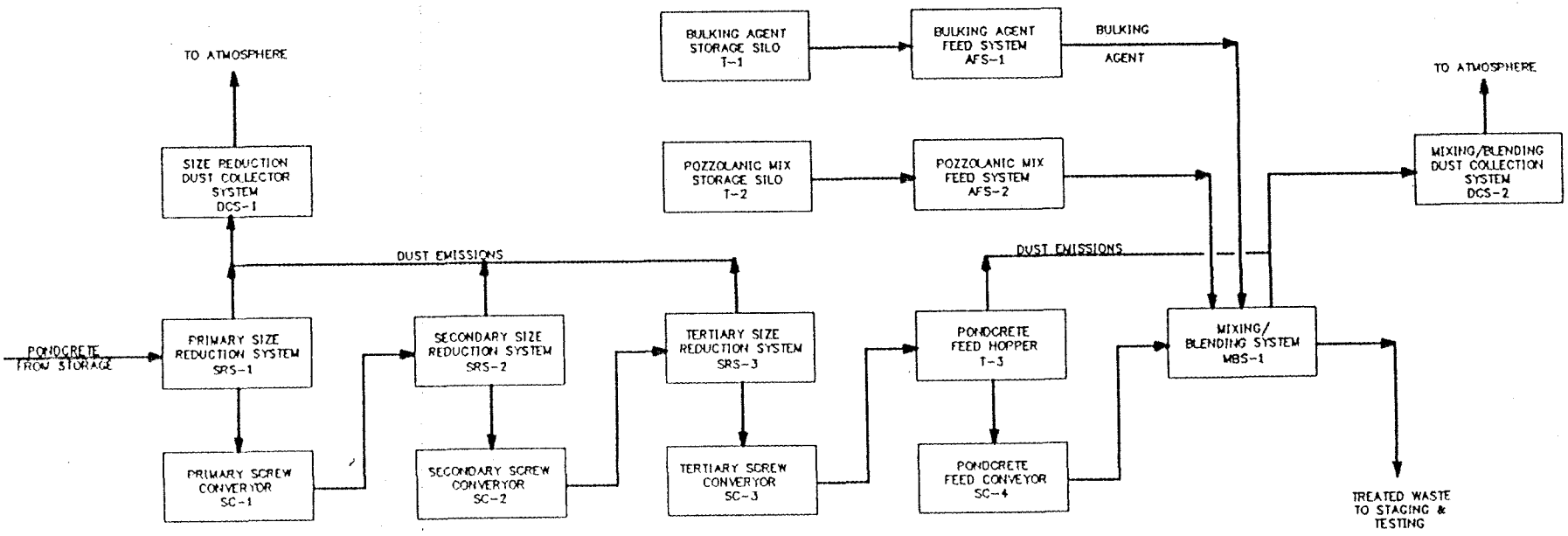

PROCESS BLOCK FLOW DIAGRAM
TREATMENT ALTERNATIVE No. 2
PONDCRETE
EG&G ROCKY FLATS, GOLDEN, COLORADO

FIGURE 2

Halliburton NUS CORPORATION

Screw Conveyor to the Pondcrete Feed Hopper of the MTU. Dust generated by the size reduction operations is captured by the Size Reduction Dust Collector System which consists of a bag-house collector, an exhaust fan, and a HEPA-type exhaust air filter. Excess dust accumulated in the collector is periodically removed for re-processing.

The MTU consists of a Pondcrete Feed Hopper (T-3), a Pondcrete Feed Conveyor (SC-4), a Mixing/Blending System (MBS-1), a Treated Waste Container Jockey System (JS-1), and a Mixing/Blending Dust Collector System (DCS-2). The MTU is operated in a semi-continuous manner at a rate designed to match the output of the SRU. The size-reduced Pondcrete output of the SRU is surged and temporarily stored in a cone-bottom Pondcrete Feed Hopper equipped with blending and force-feeding devices and transferred from there to the Mixing/Blending System by the screw-type Pondcrete Feed Conveyor. The Mixing/Blending System consists of a Turbulator-type pre-mixer, a pug-mill type mixing device, and a belt-type conveyor and discharge chute. In the Mixing/Blending System, the Pondcrete and pozzolanic mix are first blended in the Turbulator pre-mixer to ensure proper wetting of the pozzolanic mix. The blend of Pondcrete and pozzolanic mix is then combined with the bulking agent in the pug mill and the treated waste is discharged as a friable mix into a storage container by the belt-type conveyor. The Treated Waste Container Jockey System slowly moves the storage container along a short length of tracks with a winch and pulley system to evenly distribute the treated waste inside the container. Dust generated by the mixing/blending operations is captured by a Mixing/Blending Dust Collector System which consists of a bag-house collector, an exhaust fan, and a HEPA-type exhaust air filter. Excess dust accumulated in the collector is periodically removed for re-processing.

4.4.3 Treatment Alternative No. 3: Wet Size Reduction Followed by Mixing/Blending Treatment

A block flow diagram of Treatment Alternative No. 3 is provided on Figure 3. Treatment Alternative No. 3 consists of four stages. In the first two stages, the size of the Pondcrete is progressively reduced, first, in a dry mode, to 6-inch or less and then, as a slurry to 0.5 inch or less. In the third stage, the size-reduced Pondcrete slurry is dewatered. In the fourth stage, the dewatered size-reduced Pondcrete is mixed with a bulking agent and pozzolanic mix.

The system for Treatment Alternative No. 3 consists of two Additive Storage and Feed Units (ASFUs), one Size Reduction Unit (SRU), one Dewatering and Transfer Unit (DTU), and one Mixing Treatment Unit (MTU).

One of the ASFUs of Treatment Alternative No. 3 stores and feeds a bulking agent and the other stores and feeds a pozzolanic mix. The equipment and operation of these ASFUs are identical to those described in Section 4.4.1 of this White Paper for Treatment Alternative No.1 ASFUs. The delivery point of the both the

ACAD: C:\ROCKY1.DWG 01/06/95 TD

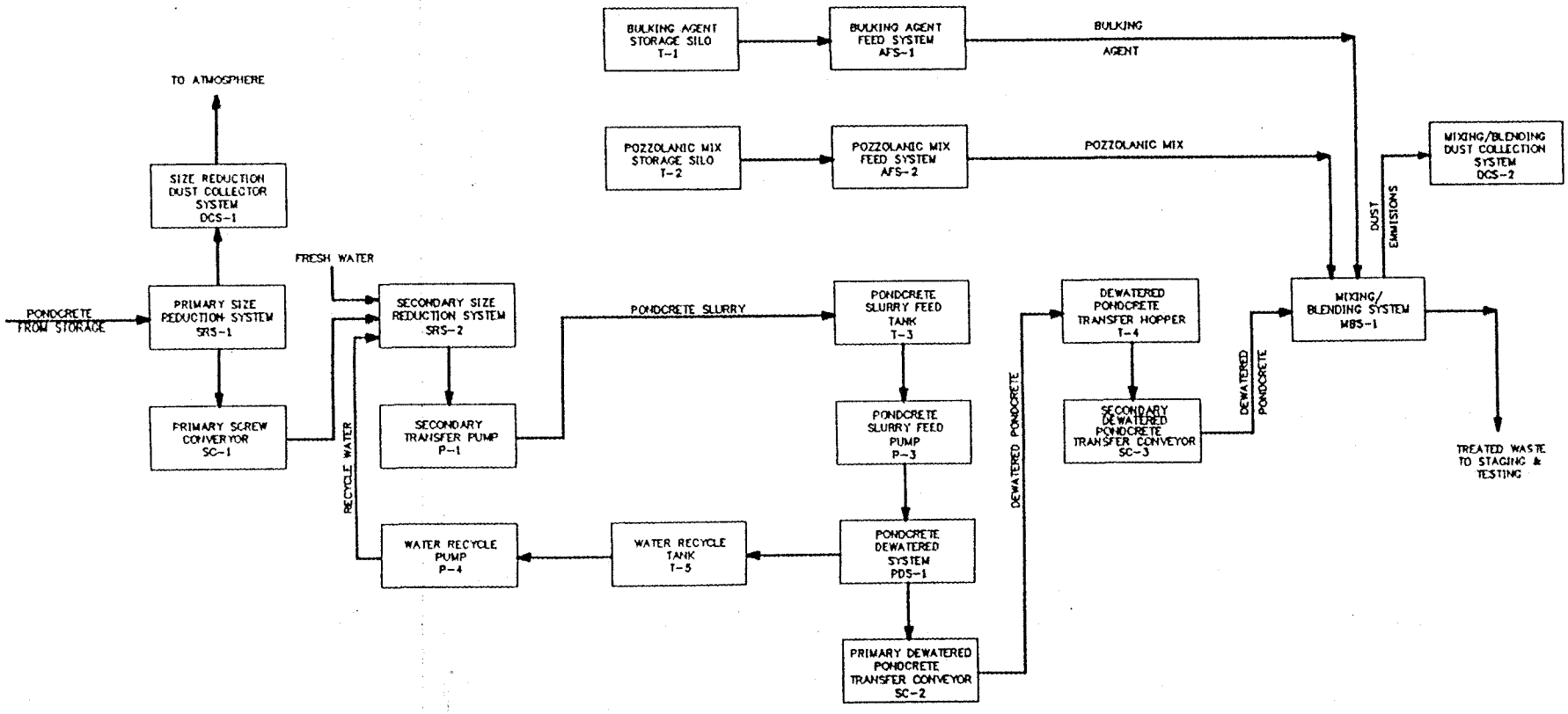

PROCESS BLOCK FLOW DIAGRAM
TREATMENT ALTERNATIVE No. 3
PONDCRETE
EG&G ROCKY FLATS, GOLDEN, COLORADO

FIGURE 3

Halliburton NUS CORPORATION

bulking agent and the pozzolanic mix is in the Mixing/Blending System of the MTU.

The SRU consists of one primary Size Reduction System (SRS-1), one secondary Size Reduction System (SRS-2), one Primary Screw Conveyor (SC-1), one Secondary Transfer Pump (P-1) and one Size Reduction Dust Collector System (DCS-1). The SRU is operated in a batch fashion with a typical batch consisting of two or three Pondcrete triwalls or one Pondcrete half-crate. The Primary Size Reduction System consists of a ring-and-pick shredder which reduces the size of the Pondcrete to 6-inch or less. The discharge of the Primary Size Reduction System is transferred by the Primary Screw Conveyor to a Secondary Size Reduction System consisting of a ball mill where water is added and where the Pondcrete size is reduced to 0.5-inch or less. The slurry discharge of the Secondary Size Reduction System is transferred by the progressive-cavity type Secondary Transfer Pump to the Pondcrete Slurry Storage Tank of the DTU. Dust generated by the primary size reduction operation is captured by the Size Reduction Dust Collector System which consists of a bag-house collector, an exhaust fan, and an HEPA-type exhaust air filter. Excess dust accumulated in the collector is periodically removed for re-processing.

The DTU consists of one Pondcrete Slurry Feed Tank (T-3), one Pondcrete Slurry Feed Pump (P-3), a Pondcrete Dewatering System (PDS-1), one Dewatered Pondcrete Storage and Transfer Hopper (T-4), two (Primary and Secondary) Dewatered Pondcrete Transfer Conveyors (SC-2, SC-3)), one Water Recycle Tank (T-5), and one Water Recycle Pump (P-4). The DTU is operated in a batch manner at a rate designed to match the output of the SRU. The size-reduced Pondcrete slurry output of the SRU is surged and temporarily stored in the cone-bottom Pondcrete Slurry Feed Tank and transferred from there to the Pondcrete Dewatering System by the progressive-cavity type Pondcrete Slurry Feed Pump. The Pondcrete Dewatering System consists of a filter press which produces a dewatered filter cake with a moisture content similar to that of the original Pondcrete. The filter cake transferred by the screw type Primary Dewatered Pondcrete Transfer Conveyor to the cone-bottom Dewatered Pondcrete Storage and Transfer Hopper and, from there, to the Mixing/Blending System of the MTU by the screw type Secondary Dewatered Pondcrete Transfer Conveyor. Filtrate from the filter press is collected in the Water Recycle Tank and recycled by the centrifugal type Water Recycle Pump for re-use in the Secondary Size Reduction System of the SRU.

The MTU consists of a Mixing/Blending System (MBS-1), a Treated Waste Container Jockey System (JS-1), and a Mixing/Blending Dust Collector System (DCS-2). The MTU is operated in a semi-continuous manner at a rate designed to match the output of the DTU. The Mixing/Blending System consists of a Turbulator-type pre-mixer, a pug-mill type mixing device, and a belt-type conveyor and discharge chute. In the Mixing/Blending System, the Pondcrete and pozzolanic mix are first blended in the Turbulator pre-mixer to ensure proper wetting of the pozzolanic mix. The blend of Pondcrete and pozzolanic mix is then combined with the bulking agent in the pug mill and the treated waste is discharged as a friable mix into a storage

container by the belt-type conveyor. The Treated Waste Container Jockey System slowly moves the storage container along a short length of tracks with a winch and pulley system to evenly distribute the treated waste inside the container. Dust generated by the mixing/blending operations is captured by a Mixing/Blending Dust Collector System which consists of a bag-house collector, an exhaust fan, and an HEPA-type exhaust air filter. Excess dust accumulated in the collector is periodically removed for re-processing.

4.5 TREATMENT ALTERNATIVES EVALUATION

In this section of the White Paper, the short-listed Pondcrete treatment alternatives are evaluated using the criteria presented in Section 4.1. The goal of the evaluation is to identify the treatment alternative that will satisfy the requirements of the closure are WAC in the most efficient and cost-effective manner, given the operating constraints present at the Rocky Flats plant. The evaluation of the short-listed Pondcrete treatment alternatives is summarized on Table 2.

4.5.1 Effectiveness

All three short-listed Pondcrete treatment alternatives evaluated can generate a treated waste that will meet all of the WAC requirements for placement in the OU-4 closure area.

4.5.2 Implementability

Space Requirements

All three Pondcrete treatment alternatives evaluated can be fitted within Tent 11 on the 904 Pad. Areal space requirements for Treatment Alternatives No. 2 and No. 3 will be significantly greater than those for Treatment Alternative No. 1 because more equipment is required for these alternatives.

Electrical Power Requirements

The electrical power requirements of all three Pondcrete treatment alternatives evaluated can be satisfied. Electrical power requirements for Treatment Alternatives No. 2 and No. 3 will be greater than those for Treatment Alternative No. 1 because more equipment is required for these alternatives.

TABLE 2

PONDCRETE TREATMENT VALUE ENGINEERING EVALUATION MATRIX

Alternatives	Effectiveness	Implementability	Operability	Cost
	• Satisfies WAC requirements	• Footprint & vertical clearance requirements • Electrical power requirements • Equipment procurement lead times • Treatability testing requirements	• Sensitivity to changes in waste properties • Process operations complexity • Equipment/controls reliability • Maintenance requirements • Operators skill/training requirements	• Capital • Operating & Maintenance • Decontamination & Decommissioning
Treatment Alternative No. 1: Combined Size Reduction and Treatment Additives Mixing	• Expected to produce a treated waste that will meet all WAC requirements	• Will fit in Tent 11 • Electrical power requirements can be met • Long-lead procurement time for size reduction equipment could impact schedule • No adjustment required to treatability study	• Not very sensitive to changes in waste properties. Can best accommodate changes • Simplest process and least equipment • Equipment/controls simplicity and low number means least chances for breakdown • Significant maintenance requirements. Easiest of three alternatives to maintain • Moderately-skilled operators and minimal special training required	Capital: $5,940,000 O&M: $2,830,000 D&D: $190,000 Total: $8,960,000
Treatment Alternative No. 2: Dry Size Reduction Followed by Treatment Additives Mixing	• Expected to produce a treated waste that will meet all WAC requirements	• Will fit in Tent 11 • Electrical power requirements can be met • Long-lead procurement time for size reduction equipment could impact schedule • No adjustment required to treatability study	• Not very sensitive to changes in waste properties • Relatively complex process and numerous equipment • Equipment/controls complexity and number means increased chances for breakdown • Significant maintenance requirements. Relatively easy to maintain • Highly-skilled operators and special training required	Capital: $5,540,000 O&M: $3,300,000 D&D: $190,000 Total: $9,030,000
Treatment Alternative No. 3: Wet Size Reduction Followed by Treatment Additives Mixing	• Expected to produce a treated waste that will meet all WAC requirements	• Will fit in Tent 11 • Electrical power requirements can be met • Long-lead procurement time for size reduction equipment could impact schedule • Additional dewatering tests required but minimal impact on treatability study schedule	• Not very sensitive to changes in waste properties • Most Complex process and most numerous equipment • Equipment/controls complexity and number means highest chances for breakdown • Significant maintenance requirements. Hardest of three alternatives to maintain • Highly-skilled operators and special training required	Capital: $6,170,000 O&M: $3,340,000 D&D: $250,000 Total: $9,760,000

Availability and Procurement Lead Times

The size reduction equipment for all three Pondcrete treatment alternatives evaluated is somewhat specialized and is not expected to be readily available. Procurement lead time for this equipment may extend five months or more which will require careful forward planning to minimize impact to the overall project schedule.

The mixing/blending equipment for Treatment Alternatives No. 2 and No. 3 is of a relatively standard type and is expected to be readily available. Procurement lead time for this equipment should not extend beyond a month and would have no significant impact on the overall project schedule.

The dewatering equipment for Treatment Alternative No. 3 is of a relatively standard type and is expected to be readily available. Procurement lead time for this equipment should not extend beyond a month and would have no significant impact on the overall project schedule.

Impact on Treatability Study

Selection of either of Treatment Alternatives No. 1 or No. 2 would have no impact on the upcoming Pondcrete treatability study as the testing of these technologies is part of the current study scope of work (SOW).

Selection of Treatment Alternative No. 3 would have a moderate impact on the upcoming Pondcrete treatability study as it would require the performance of Pondcrete slurry dewatering tests which are not part of the current study SOW. It is expected, however, that such dewatering tests could be performed with minimal impact on the schedule of the treatability study.

4.5.3 Operability

Sensitivity to Changes

All three Pondcrete treatment alternatives evaluated would be relatively insensitive to changes in the characteristics of the incoming Pondcrete and in the feed rate of treatment additives.

Treatment Alternative No. 1, by combining primary size reduction with treatment additives mixing in a single contained batch step, provides better means for adjustment of operating parameters in response to extreme swings in the physical characteristics and composition of the incoming Pondcrete.

Equipment Complexity and Operating Personnel Qualifications/Training Requirements

The equipment for Treatment Alternative No. 1 is the simplest of all three Pondcrete treatment alternatives evaluated and there is only three stages of operations. With Treatment Alternative No. 1, there is no need to match the output of one or more batch operations with the input of a semi-continuous operation. Operating personnel would have to be somewhat skilled but the needs for specialized training would be kept to a minimum.

The equipment for Treatment Alternative No. 2 is more complex than that for Treatment Alternative No. 1 and requires four stages of operations instead of five. With Treatment Alternative No. 2, there is a need to match the output of the batch-operated Size Reduction Unit with the input of the semi-continuous-operating Mixing Treatment Unit. Operating personnel would therefore need to be highly skilled and undergo specialized training.

The equipment for Treatment Alternatives No. 3 is the most complex of all three Pondcrete treatment alternatives evaluated with four stages of operations, including dewatering. With Treatment Alternative No. 3, there is a need to match the outputs of the batch-operated Size Reduction Unit and Dewatering and Transfer Unit with the input of the semi-continuous-operating Mixing Treatment Unit. Operating personnel would therefore need to be highly skilled and undergo specialized training.

Equipment and Controls Reliability

The equipment and controls for Treatment Alternative No. 1 would be less complex and would be more reliable than those for the other Pondcrete treatment alternatives. Although break-down of this equipment may occur, it should be relatively easy to fix and the need for spare/stand-by equipment should be minimal.

The equipment and controls for Treatment Alternative No. 2 would be more complex and less reliable than those for Treatment Alternative No. 1 and some break-downs can be expected, particularly at the sensitive transition between of Size Reduction Unit and Mixing Treatment Unit. Accordingly, spare/stand-by equipment would be required to minimize down-time.

Due to their complexity, the equipment and controls for Treatment Alternative No. 3 would be generally less reliable and more susceptible to break-down than those for the other alternatives. The need for spare/stand-by equipment for Treatment Alternative No. 3 would be relatively high if down-time is to be minimized.

Maintenance Requirements

The maintenance requirements for all three Pondcrete treatment alternatives evaluated would be significant as all of them include size reduction equipment which demands frequent maintenance. However, in relation to the number and complexity of the equipment included, the maintenance requirements of Treatment Alternative No. 1 would be least, those of Treatment Alternative No. 2 would be higher, and those of Treatment Alternative No. 3 would be highest.

Decommissioning Requirements

The decommissioning requirements for all three Pondcrete treatment alternatives evaluated would be extensive. Special health and safety considerations and equipment disposal considerations are anticipated to be comparable.

4.5.4 Cost

A comparison of budget-type capital expenditure, operating and maintenance costs, and decommissioning costs estimates for the three Pondcrete treatment alternatives evaluated is provided on Table 3.

TABLE 3

PONDCRETE TREATMENT ALTERNATIVES COST ESTIMATES

Costs	Treatment Alternative No. 1	Treatment Alternative No. 2	Treatment Alternative No. 3
Capital	$5,940,000	$5,540,000	$6,170,000
Operating & Maintenance	$2,830,000	$3,300,000	$3,340,000
Decontamination & Decommissioning	$190,000	$190,000	$250,000

As can be seen from the figures on this table, the estimated capital expenditure and operating and maintenance costs for Treatment Alternative No. 1 are slightly lower than those for the other alternatives. Decontamination and decommissioning costs are essentially equal for Treatment Alternatives No. 1 and No. 2, and slightly higher for Treatment Alternative No. 3.

4.6 RECOMMENDED TREATMENT ALTERNATIVE

Based on the results of the Pondcrete treatment alternatives evaluation conducted in Section 4.5, all three Pondcrete Treatment alternatives evaluated would likely perform in a satisfactory manner and differences between alternatives for each evaluation criteria were relatively minor rather than clear-cut. However, Treatment Alternative No. 1 with combined batch size reduction and treatment additive mixing is recommended as the alternative best able to satisfy the OU-4 Closure Area WAC in the most efficient, reliable, and cost-effective manner. Specifically, this treatment alternative:

- is the easiest to operate (three-stage batch operation, limited amount of equipment, simple controls);
- offers the greatest operating reliability (simplest and least numerous equipment resulting in lowest probability of breakdown);
- lowest total cost (capital, operating and maintenance, and decontamination and decommissioning).

Treatment Alternative No. 1 is described in further detail in Section 5.0 of this White Paper.

5.0 TREATMENT SYSTEM DESCRIPTION

The Pondcrete waste is stored in approximately 8,000 triwall containers and in 20 to 30 half-crates and drums. Each triwall has a nominal volume and weight of about 15 cubic feet and 1,300 pounds, respectively. Approximately 2,600 of the triwalls have been overpacked in metal containers at two or three triwalls per container. The Pondcrete is currently in interim storage in Tents 8 through 11, located on the 904 Pad. This Pondcrete will be removed from storage, size-reduced to 0.5-inch or smaller, treated with a pozzolanic agent mix of lime and cement to adsorb any free moisture and destroy any pathogens or gas-producing micro-organisms, and mixed with a bulking agent such as sand or other additive to produce a friable treated waste which satisfies the WAC for the "Contaminated Media" layer of the OU-4 Interim Remedial Action (IRA) closure area (see Section 3.0).

The treated waste will be staged in closed transport containers on the 904 Pad while tests are conducted to confirm compliance with the WAC. Upon satisfying the WAC requirements, the treated waste will be transported to the OU-4 closure area on an as-needed basis for distribution and placement by the closure work area contractor.

The Pondcrete Size Reduction and Treatment System, shown on Figure 4, will consist of the following unit operations:

- Transfer of the Pondcrete from interim storage to size reduction and treatment
- Storage and feeding of treatment additives
- Pondcrete size reduction and mixing/blending treatment with additives
- Treated waste storage and testing
- Treated waste transfer to OU-4 closure area

The above operations will be performed with self-contained, skid-mounted, pre-piped, and pre-wired packaged units. Wherever possible, these units will be mobile and will utilize standard "off-the-shelf" equipment. Treatment equipment will be modified, as necessary, to conform to applicable Rocky Flats Plant Health & Safety and Environmental Standards.

Process equipment and containers for the transport of the Pondcrete and treated waste will be covered to prevent air emissions and loss of material. Empty Pondcrete and treated waste transport containers will be reused.

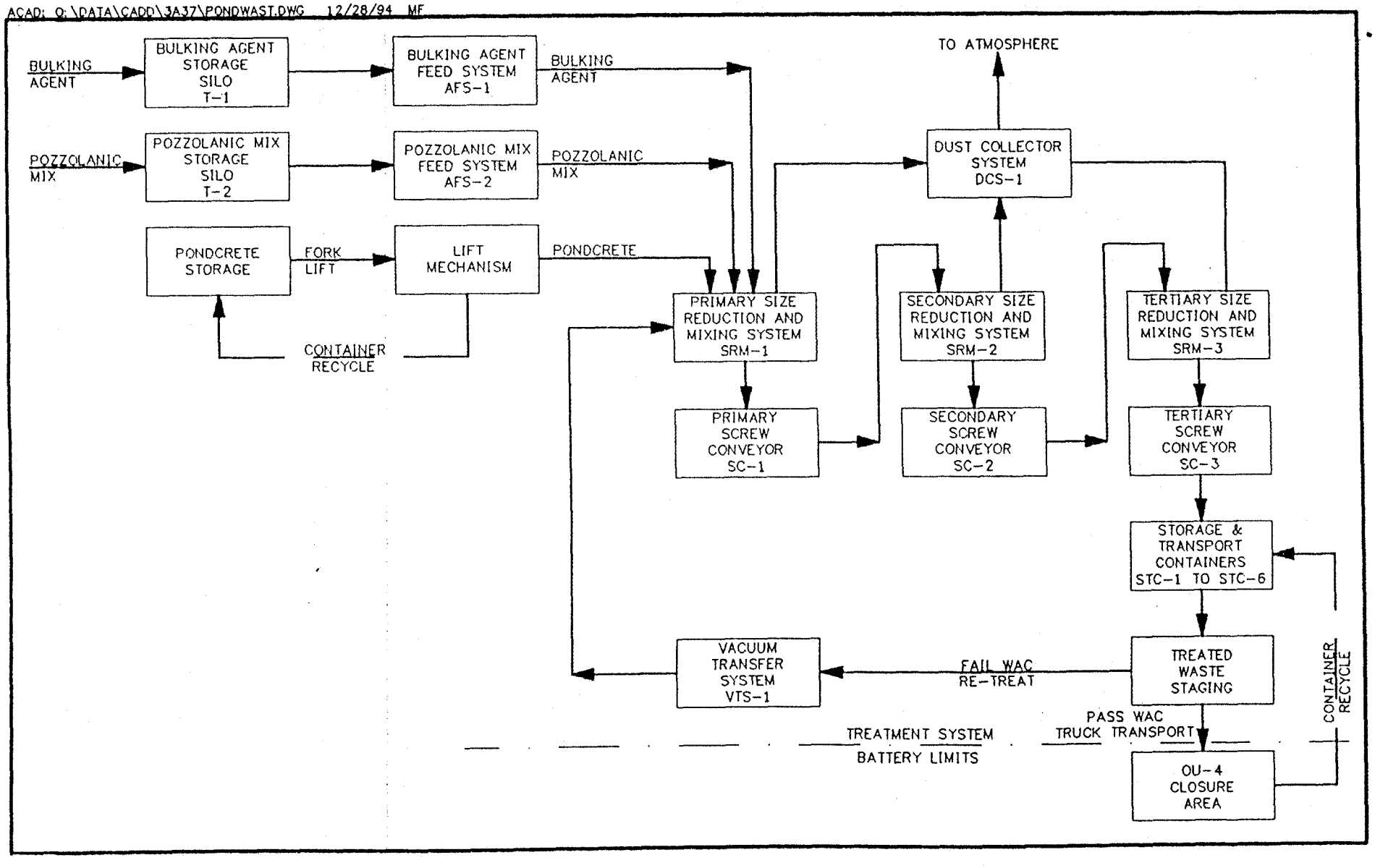

FIGURE 4
CONCEPTUAL BLOCK FLOW DIAGRAM
PONDCRETE SIZE REDUCTION AND TREATMENT SYSTEM
EG&G ROCKY FLATS, GOLDEN, COLORADO

Halliburton NUS CORPORATION

5.1 PONDCRETE TRANSFER

5.1.1 Operations Description

The Pondcrete triwalls not already in metal containers will be placed into new re-usable metal containers designed to hold two triwalls each. As required, a drying agent will also be added in each metal container to adsorb any free liquid which may be released from the triwalls. As part of this operation, storage of the existing and new Pondcrete metal containers and Pondcrete half-crates will be consolidated inside Tents 8, 9, and 10.

The new and existing Pondcrete metal containers and Pondcrete half-crates will be transferred by fork-lift trucks from temporary storage in Tents 8, 9, or 10 to the Size Reduction and Treatment Unit located in Tent 11. At the Size Reduction and Treatment Unit, the metal containers or half-crates will be deposited onto a Lifting Mechanism (LM-1) located at the foot of the primary Size Reduction and Mixing Unit. This mechanism will lift the metal container or half-crate and unload either the container's contents or the entire half-crate into the feed hopper of the primary Size Reduction and Mixing Unit (SRM-1). The empty metal container will then be returned to the temporary storage area (Tents 8, 9, and 10).

5.1.2 Operations Control

Transfer of the Pondcrete to the Size-Reduction and Treatment System will be a manually-controlled operation. Operational control of the Pondcrete transfer will be performed by regulating the fork-lift truck traffic between the interim storage and the size reduction and treatment areas. It is expected that approximately three metal containers per hour will be transferred to the Pondcrete Size Reduction and Treatment System.

Grab samples of the Pondcrete waste will be collected periodically and visually evaluated for cohesiveness and field-analyzed for percent moisture content. Results of this visual evaluation and field analysis will be used to adjust the amount of treatment additives fed into the primary Size Reduction and Mixing System.

5.2 TREATMENT ADDITIVES STORAGE AND FEED

5.2.1 Operations Description

The treatment additives will be stored and fed by two Additive Storage and Feed Units (ASFUs).

Additives will be blended with the Pondcrete as part of the size-reduction process to produce a friable mix. Although treatability study testing will be required to confirm the nature and quantity of the additives to be used, it is likely that a dry bulking agent such as sand will be added as well as a pozzolanic agent mix of Portland cement and lime (hydrated or unhydrated). Bulking agent will be added in sufficient quantity to adsorb free moisture and impart a friable texture to the treated waste. Currently, it is assumed that sand will be added at the rate of about 0.75 tons of sand per wet ton of Pondcrete. The cement and lime mix will be added in quantities sufficient to complete the adsorption of free moisture and achieve a pH of approximately 12 in the treated waste to destroy any pathogens and gas-producing micro-organisms that may be present. Currently, it is assumed that a mixture of Portland Type I-II cement and hydrated lime [$Ca(OH)_2$] will be added at the rate of about 0.6 tons of cement/lime mix per wet ton of Pondcrete.

Other additives such as drying agents (e.g., calcium chloride, silica gel, etc.) or other pozzolanic agents, such as fly ash, and/or bulking agents, such as bentonite, may also be required, pending the results of treatability testing.

Each ASFU will consist of a Storage Silo (T-1 for bulking agent, T-2 for pozzolanic agent) and an Additive Feed Unit (ASF-1 for bulking agent, ASF-2 for pozzolanic agent).

The treatment additives will be delivered to the treatment site by bulk hopper truck and stored in the Storage Silos. The transfer from the hopper truck to the Storage Silo will be performed by a standard commercial pneumatic transport and delivery system which is part of the bulk hopper truck unloading system. The Storage Silos will be equipped with a passive venting and dust collection system to control any emissions during delivery or operations.

The additives will be fed to the size reduction and treatment process by the Additive Feed Systems. Each Additive Feed System will consist of a rotary valve feeder, a weigh-belt conveyor, and a screw conveyor. The additive will be discharged onto the weigh-belt conveyor by the rotary valve feeder and the weigh-belt feeder will measure and control the delivery rate of the rotary valve feeder. A controlled amount of additive will then be delivered to the primary Size Reduction and Mixing System by the screw conveyor.

5.2.2 Operations Control

Transfer of the treatment additives from the bulk delivery truck to the Storage Silo will be a manually-controlled operation. The truck-mounted transfer air blower will be operated by the truck driver.

The amount of additive in a Storage Silo will be measured and indicated by level-sensing devices. High- and low-level conditions inside the Storage Silo will be alarmed.

Operation of the Additive Storage and Feed Systems will be a manually-initiated and semi-automatically-controlled operation. The rotary valve feeder, weigh-belt conveyor, and screw conveyor will be manually started and stopped by **ON-OFF** electrical push-buttons located on the system's control panel. Additive feed rate will be automatically controlled to a manually-set rate by the weigh-belt conveyor which will regulate the operational speed of the rotary valve feeder and screw conveyor. The quantity of treatment additive delivered to the primary Size Reduction and Mixing System will be controlled by adjusting the operating time of each Additive Feed System.

5.3 SIZE REDUCTION AND TREATMENT

5.3.1 Operations Description

The size reduction of the Pondcrete and the treatment of the size-reduced waste by mixing with additives will be performed in three stages by a Size Reduction and Treatment Unit (SRTU).

The treatment process will consist of progressively reducing the particle size of the Pondcrete and trash (plastic wrap and pallets), first to minus 6-inch, then minus 1-inch, and finally to minus 0.5-inch, and of mixing the size-reduced Pondcrete and trash with the treatment additives (sand and cement/lime mix) as necessary to produce a treated waste that satisfies the WAC. For the purpose of this White Paper, it is assumed that all of the treatment additives will be fed into the primary size reduction and mixing process to insure optimum blending of the waste with the additives and to take maximum advantage of the drying characteristics of these additives. Provision will, however, be made in the design of the system to allow multiple additive feed points at the secondary and tertiary size reduction and mixing stages as may be determined from operating experience.

The SRTU will consist of one primary Size Reduction and Mixing System (SRM-1), one secondary Size Reduction and Mixing System (SRM-2), one tertiary Size Reduction and Mixing System (SRM-3), three (primary, secondary, tertiary) Screw Conveyors (SC-1 through SC-3), one Treated Waste Container Jockey System (JS-1), and one Dust Collector System (DCS-1).

The primary Size Reduction and Mixing Unit will be a screw-auger type shredder equipped with a hydraulically-operated bottom trap-door to retain the materials being shredded and blended within range of the screw-augers and insure optimal size reduction and blending. Size reduction is achieved primarily

by the "scissoring" cutting action of the helixes of the screw-augers bearing against each other. The screw-augers also crush the material between them and against rigid baffles located on the wall of the feed hopper. The action of the rotating screw-augers also provides for mixing of the size-reduced Pondcrete with the treatment additives. In the primary Size Reduction and Mixing System the contents of one Pondcrete metal container, including plastic wrapping and wooden pallets, or of one Pondcrete half-crate, will be reduced in size to 6-inch or less and blended with a measured amount of treatment additives as determined from treatability testing and adjusted in response to hot operation testing and field observations.

Once the primary size reduction and mixing operation is complete, as verified by visual observation, the bottom trap-door of the primary Size Reduction and Mixing System will be opened and the shredded and the size-reduced and blended materials will be released into the primary Screw Conveyor which will transfer it to the secondary Size Reduction and Mixing System.

The secondary Size Reduction and Mixing System will be a ring-and-pick type shredder with counter-rotating shafts. Size reduction is achieved by the picks of one shaft grabbing the material to be shredded and shearing it against the rings of the adjacent shaft or stationary plates mounted on the side of the shredder. The counter-rotating action of the shredding shafts also achieves a reasonable degree of blending. In the secondary Size Reduction and Mixing System the size of Pondcrete discharged from the primary Size Reduction and Mixing System will be further reduced to 1-inch or less and the size-reduced waste will be further blended with the treatment additives.

The discharge of the secondary Size Reduction and Mixing System will be collected into the secondary Screw Conveyor which will transfer it to the tertiary Size Reduction and Mixing System.

The tertiary Size Reduction and Mixing System will also be a ring-and-pick type shredder and will be identical to the secondary Size Reduction and Mixing System, except that it will be designed to reduce the size of the Pondcrete waste to 0.5-inch or less.

Throughout the three stages of the SRTU, the process of mixing the Pondcrete waste with the treatment additives will be one of homogenization and blending, as opposed to high-intensity mixing. The bulking agent will adsorb free moisture and impart friability to the treated waste. The pozzolanic agent mix will bind the Pondcrete particles and absorb residual free moisture in addition to serving as a biocide. The character of the treated waste is presumed to be similar to a friable soil. It will have no free moisture (estimated maximum moisture content of 20 percent by weight) and should be dust free (estimated minimum moisture content of 10 percent by weight).

The discharge of the tertiary Size Reduction and Mixing System will be collected into the tertiary Screw Conveyor which will transfer it to the Treated Waste Container Jockey System.

The Treated Waste Container Jockey System will slowly move the treated waste transport container along a short length of tracks with a winch and pulley system to evenly distribute the treated Pondcrete inside the container.

The size-reduction and mixing process is not expected to generate significant quantities of dust. However, each Size Reduction and Mixing System will be enclosed and vented to the Dust Collector System. This system will consist of a baghouse-type collector, an exhaust blower, and an exhaust HEPA filter. Dust emissions will be aspirated from the Size Reduction and Mixing Systems and forced through the baghouse collector by the exhaust blower. The baghouse collector will remove the majority of the dust and any residual dust will be removed from the discharge of the exhaust blower by the HEPA filter. Excess dust accumulated in the baghouse collector will be periodically removed for re-processing through the size reduction and treatment process.

5.3.2 Operations Control

The size reduction of the Pondcrete and the mixing with treatment additives in the size reduction and treatment process will be a manually-controlled batch operation. Each batch to be treated will consist of either the contents of one Pondcrete metal container (typically three triwalls) or one Pondcrete half-crate.

Operational control of the three Size Reduction and Mixing Systems and corresponding Screw Conveyors will be through **ON-OFF** electrical switches mounted on the system's control panel. The amount of treatment additive fed to the primary Size Reduction and Mixing System will be controlled by manually setting the feed rate of each Additive Feed System to a certain level and operating these systems for corresponding periods of times. The amount of treatment additives used will be based on the free moisture content of the Pondcrete waste and on the treatment parameters developed from the treatability test results. The effectiveness of the Pondcrete waste size-reduction and treatment process will be visually checked at all three stages. In particular, frequent observations will be made of the contents of the primary Size Reduction and Mixing System to determine when proper size reduction and mixing has been achieved so that a batch may be released for processing through the secondary and tertiary size reduction and mixing stages.

Operational control of the Treated Waste Container Jockey System will be through **ON-OFF** electrical push-buttons located on the system's control panel.

Operational control of the Dust Collector System will be through **ON-OFF** electrical push-buttons located on the system's control panel.

5.4 TREATED WASTE STORAGE AND TESTING

5.4.1 Operations Description

The treated waste will be stored, tested, and, if necessary, recycled in a Treated Waste Staging and Testing Unit (TSTU).

The TSTU will consist of six Storage and Transport Containers (STC-1 through 6) and one Vacuum Transfer System (VTS-1).

The treated waste will be discharged from the tertiary Screw Conveyor directly into one of the Storage and Transport Containers. Each container will be of the roll-off type equipped with a removable top cover, an end-dump gate, and bottom wheels for movement on the tracks of the Treated Waste Container Jockey System. When filled, the top cover is placed on the Storage and Transport Container and it is moved away from the loading point to permit introduction of an empty container. The full Storage and Transport Container will be moved to an area of the 904 Pad to be staged/stored for curing purposes. Staging of treated waste will also provide a surge or buffer capacity between the operating requirements and schedule of the treatment system and those of the closure area contractor. Six Storage and Transport Containers will be staged representing about two days production of treated waste.

Routine testing of the staged treated waste will be performed as discussed in Section 5.4.2. In the unlikely event that the contents of a Storage and Transport Container do not satisfy the WAC, re-treatment will be required. Typically, it is expected that the treatment mix formulation will be effective over a wide range of operating conditions and Pondcrete composition.

In the event that the contents of a Storage and Transport Container fails to meet the WAC, the off-specification treated waste will be aspirated from the container and returned to the primary Size Reduction and Mixing System by the portable Vacuum Transfer System. This system will feature a vacuum pump, a cone-bottom discharge hopper equipped with a variable-speed rotary valve feeder, and a variable-speed screw conveyor. The discharge hopper will be fully enclosed and will include a venting system equipped with a HEPA filter to remove dust from the pressurized air discharge of the Vacuum Transfer System. In the primary Size Reduction and Mixing System, the off-specification treated waste will be blended with extra bulking agent and/or pozzolanic agent mix to produce a treated waste that meets the WAC.

5.4.2 Operations Control

Transfer, storage, testing, and recycle of treated waste in the TSTU will be manually-controlled operations.

Transfer of treated waste between the size reduction and treatment area and the storage and testing area will be controlled by regulating the traffic of Storage and Transport Containers tractor trucks between these areas.

Storage of treated waste will be controlled by regulating the traffic of Storage and Transport Containers tractor trucks between the treated waste storage and testing area and the OU-4 disposal area.

Testing of treated waste will be performed by collecting grab samples from the Storage and Transport Containers after completion of the curing period. The treated waste samples will be field-tested for compliance with the WAC. In particular, these field tests will verify that the treated waste samples pass the Paint Filter Liquid Test (SW 9095) and that the pH of the treated waste is at least equal to the value determined from the treatability study as necessary for the destruction of pathogens and gas-producing micro-organisms.

Operation of the Vacuum Transfer System for the recycle of treated waste is controlled by **ON-OFF** electrical push-buttons located on the system's control panel for the vacuum pumps, rotary valve feeder, and screw conveyor. Speed, and thus throughput, of the rotary valve feeder and screw conveyor will be manually controlled from the Vacuum Transfer System control panel.

5.5 TREATED WASTE TRANSFER TO OU-4

5.5.1 Operations Description

The treated waste will be transferred to the OU-4 closure area in the same Storage and Transport Containers as used for staging and storage. Once the treated waste has been removed from the Storage and Transport Containers at the OU-4 closure area, the empty containers will be returned to the SRTU.

5.5.2 Operations Control

Transportation of the treated waste to the OU-4 placement area will be controlled by regulating the traffic of Storage and Transport Containers tractor trucks between the treated waste storage and testing area and the OU-4 placement area.

5.6 DECONTAMINATION AND DECOMMISSIONING

5.6.1 Description

Upon completion of the Pondcrete size reduction and treatment, the equipment used for these activities will be decontaminated and decommissioned.

Decontamination will consist of thoroughly flushing and rinsing with fresh service water all equipment which came into contact with the Pondcrete, the treatment additive(s), and the treated waste to completely remove these materials from the equipment. As required, the decontamination process may also involve the use of low-pressure steam or mechanical scrubbing with detergent-type products or other solvents. Waste decontamination fluids will be transferred to the Building 374 Spray Dryer for disposal.

Decommissioning will consist of dismantling the Pondcrete size reduction and treatment system to the extent that it will not be possible to re-activate this system on an instantaneous, or near-instantaneous basis. To this effect, flexible connections between pieces of equipment will be removed and hard connections will be severed. Electrical supply to control panels and switches will be disconnected and strategic wiring removed. Additive storage silos will be emptied and the additives stockpiled at a remote location or used elsewhere in the Rocky Flats Plant.

5.6.2 Process and Operational Controls

Decontamination and decommissioning of the Pondcrete size reduction and treatment system will be strictly manual operations.

The effectiveness of the decontamination process will be verified by the collection and analysis of wipe samples from the decontaminated equipment to verify that all waste and additives have been adequately removed.

6.0 SCHEDULE

Based on the information generated in this White Paper the following estimated project schedule for the Inventory Pondcrete Treatment System Project was developed:

• Complete Conceptual Design Report	July 14, 1995
• Begin Title II Design	July 31, 1995
• Complete Title II Design	December 1, 1995
• Begin Procurement/Installation	January 2, 1996
• Complete Procurement/Installation	July 26, 1996
• Begin Commissioning/Training	July 29, 1996
• Complete Commissioning/Training	August 23, 1996
• Begin Treatment Operations	September 29, 1996
• Complete Treatment Operations	March 21, 1997
• Begin Decontamination and Dismantling	March 24, 1997
• Complete Decontamination and Dismantling	April 18, 1997
• Schedule Reserve	April 21, 1997 to August 29, 1997

The treatment operations schedule is based on the information provided in Section 3.1.3.

This schedule assumes that the review periods that occur between the various project tasks will proceed in a timely manner.

7.0 COST ESTIMATES

The following preliminary cost estimates are based on the inventory pondcrete treatment system described in Section 5 of this White Paper:

Procurement and Installation (Capital Cost)	$5,940,000
Operations and Maintenance Costs	$2,830,000
Decontamination and Dismantling Costs	$ 190,000

The operations and maintenance costs are based on operating 16 hours/day, 5 days/week for 10 months.

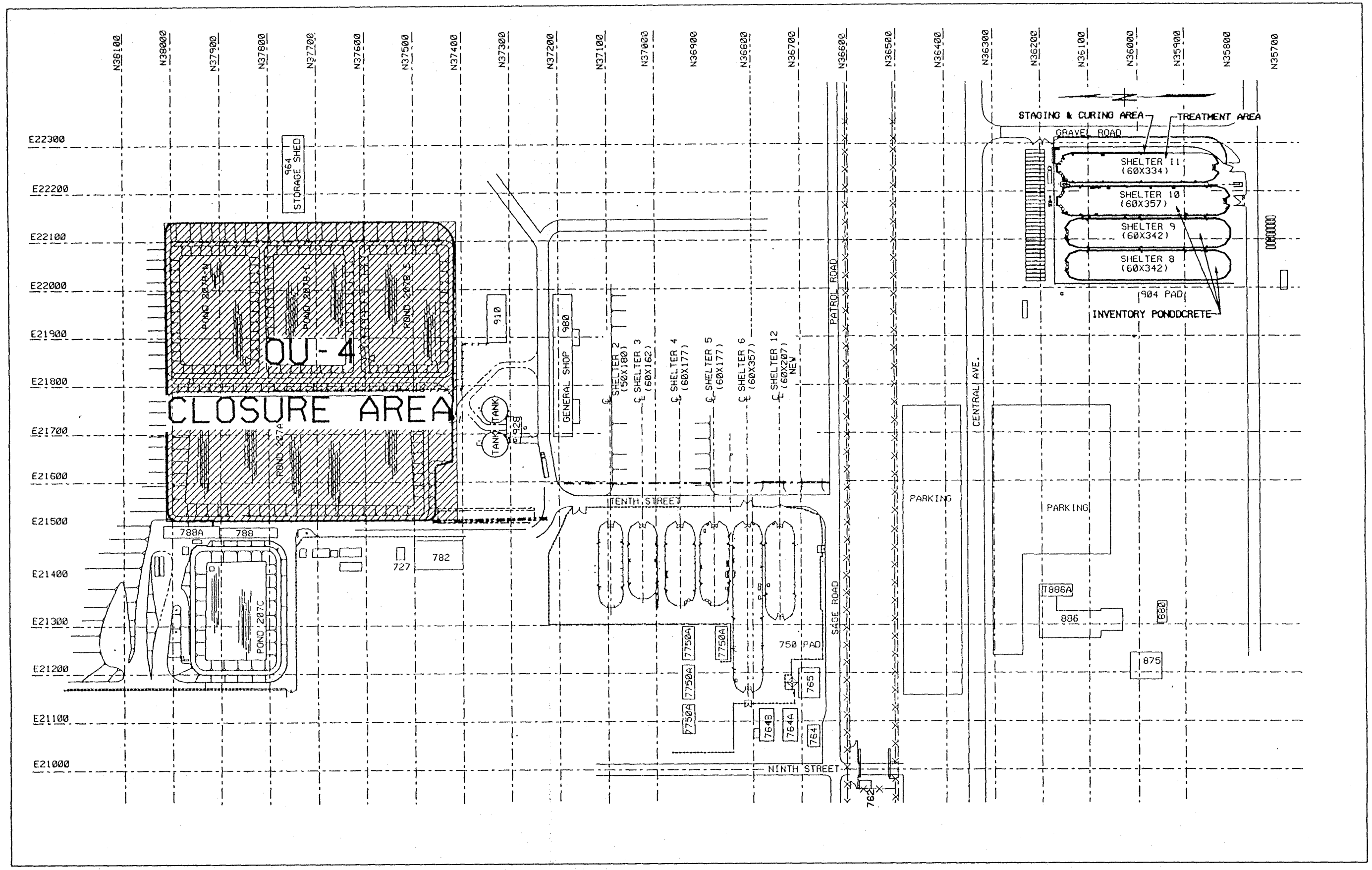

400' 0 400'

DRAWING 1

PONDCRETE SIZE REDUCTION AND TREATMENT SYSTEM

FACILITIES LAYOUT

Halliburton NUS CORPORATION