KAISER•HILL
COMPANY

Solar Ponds Closeout RAD Summary Report

JAN 2003
RECEIVED
RECORDS CENTER

ADMIN RECORD

1-453
1-443

Best Available Copy

OPE 109-C1

ROCKY FLATS ENVIRONMENTAL TECHNOLOGY SITE

INSTRUMENT DATA

Mfg.	Eberline	Mfg.	NE	Mfg.	NE
Model	SAC 4	Model	Electra	Model	Electra
Serial #	824	Serial #	1833	Serial #	2394
Cal Due	10/30/20	Cal Due	10/3/02	Cal Due	9/26/02
Bkg	0 cpmα	Bkg	6 cpmα	Bkg	2 cpmα
Efficiency	33.00 %	Efficiency	22.90 %	Efficiency	22.10 %
MDA	20 dpmα	MDA	62 dpmα	MDA	42 dpmα

Mfg.	Eberline	Mfg.	NE	Mfg.	NE
Model	BC 4	Model	Electra	Model	Electra
Serial #	704	Serial #	1833	Serial #	2394
Cal Due	10/30/02	Cal Due	3/31/01	Cal Due	9/26/02
Bkg	36 cpmb	Bkg	419 cpmβ	Bkg	344 cpmβ
Efficiency	25.00 %	Efficiency	30.40 %	Efficiency	29.80 %
MDA	200 dpmβ	MDA	322 dpmβ	MDA	299 dpmβ

Survey Type: Contamination- Radiation
Building: Solar Ponds
Location: Routine
Purpose: Daily

RWP #: NA

Date: 7/31/02 Time: 15:00

[redacted]

Print name Signature Emp. #

PRN/REN # : NA
Comments: NA

SURVEY RESULTS

Swipe #	Location / Description Results in DPM/100sq.cm	Removable		Total	
		Alpha	Beta	Alpha	Beta
1	front bucket	< 20	< 200	< 62	<322
2	front bucket	< 20	< 200	< 62	<322
3	front bucket	< 20	< 200	< 62	<322
4	front bucket	< 20	< 200	< 62	<322
5	rear bucket	< 20	< 200	< 62	<322
6	rear bucket	< 20	< 200	< 62	<322
7	rear bucket	< 20	< 200	< 62	<322
8	rear bucket	< 20	< 200	< 62	<322
9	cab	< 20	< 200	< 62	<322
10	cab	< 20	< 200	< 62	<322
11	cab	< 20	< 200	< 62	<322
12	cab	< 20	< 200	< 62	<322
13	NA	NA	NA	NA	NA
14	NA	NA	NA	NA	NA
15	NA	NA	NA	NA	NA
16	NA	NA	NA	NA	NA
17	NA	NA	NA	NA	NA
18	NA	NA	NA	NA	NA
19	NA	NA	NA	NA	NA
20	NA	NA	NA	NA	NA
21	NA	NA	NA	NA	NA
22	NA	NA	NA	NA	NA
23	NA	NA	NA	NA	NA
24	NA	NA	NA	NA	NA
25	NA	NA	NA	NA	NA

MAP

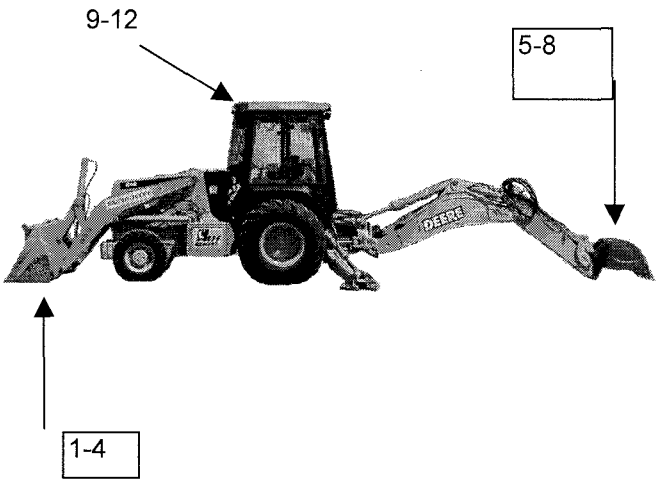

Date Reviewed: 9-9-02 **RS Supervision:** [redacted]

ROCKY FLATS ENVIRONMENTAL TECHNOLOGY SITE

INSTRUMENT DATA

Mfg.	Eberline	Mfg.	NE	Mfg.	NE
Model	SAC 4	Model	Electra	Model	Electra
Serial #	824	Serial #	1833	Serial #	2394
Cal Due	10/30/20	Cal Due	10/3/02	Cal Due	9/26/02
Bkg	0 cpmα	Bkg	6 cpmα	Bkg	2 cpmα
Efficiency	33.00 %	Efficiency	22.90 %	Efficiency	22.10 %
MDA	20 dpmα	MDA	62 dpmα	MDA	42 dpmα

Mfg.	Eberline	Mfg.	NE	Mfg.	NE
Model	BC 4	Model	Electra	Model	Electra
Serial #	704	Serial #	1833	Serial #	2394
Cal Due	10/30/02	Cal Due	3/31/01	Cal Due	9/26/02
Bkg	36 cpmb	Bkg	419 cpmβ	Bkg	344 cpmβ
Efficiency	25.00 %	Efficiency	30.40 %	Efficiency	29.80 %
MDA	200 dpmβ	MDA	322 dpmβ	MDA	299 dpmβ

Survey Type: Contamination- Radiation
Building: Solar Ponds
Location: Insulation Removal/Sanitary Waste
Purpose: Daily

RWP #: NA

Date: 7/31/02 Time: 15:00

[redacted]

PRN/REN # : NA
Comments: NA

SURVEY RESULTS

Swipe #	Location / Description Results in DPM/100sq.cm	Removable Alpha	Removable Beta	Total Alpha	Total Beta
1	Insulation/Fiberglass	<20	<200	< 62	<322
2	Insulation/Fiberglass	<20	<200	< 62	<322
3	Insulation/Fiberglass	<20	<200	< 62	<322
4	Insulation/Fiberglass	<20	<200	< 62	<322
5	Insulation/Fiberglass	<20	<200	< 62	<322
6	Insulation/Fiberglass	<20	<200	< 62	<322
7	Insulation/Fiberglass	<20	<200	< 62	<322
8	Insulation/Fiberglass	<20	<200	< 62	<322
9	Insulation/Fiberglass	<20	<200	< 62	<322
10	Insulation/Fiberglass	<20	<200	< 62	<322
11	Insulation/Fiberglass	<20	<200	< 62	<322
12	Insulation/Fiberglass	<20	<200	< 62	<322
13	Insulation/Fiberglass	<20	<200	< 62	<322
14	Insulation/Metal Cover	<20	<200	< 62	<322
15	Insulation/Metal Cover	<20	<200	< 62	<322
16	Insulation/Metal Cover	<20	<200	< 62	<322
17	Insulation/Metal Cover	<20	<200	< 62	<322
18	Insulation/Metal Cover	<20	<200	< 62	<322
19	Insulation/Metal Cover	<20	<200	< 62	<322
20	Insulation/Metal Cover	<20	<200	< 62	<322
21	Insulation/Metal Cover	<20	<200	< 62	<322
22	Insulation/Metal Cover	<20	<200	< 62	<322
23	Insulation/Metal Cover	<20	<200	< 62	<322
24	Insulation/Metal Cover	<20	<200	< 62	<322
25	Insulation/Metal Cover	<20	<200	< 62	<322

Map

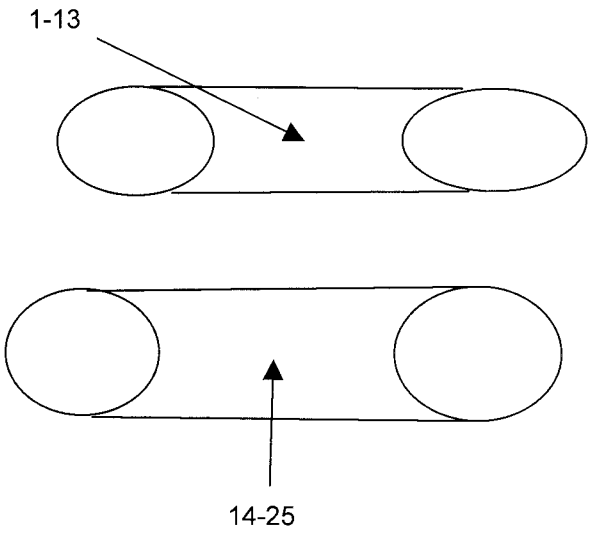

Date Reviewed: 9-9-02 **RS Supervision:** [redacted]

Print Name Signature Emp. #

ROCKY FLATS ENVIRONMENTAL TECHNOLOGY SITE

INSTRUMENT DATA

Mfg.	Eberline	Mfg.	NE	Mfg.	NE
Model	SAC 4	Model	Electra	Model	Electra
Serial #	824	Serial #	1833	Serial #	2394
Cal Due	~~10/30/20~~ 10/30/02	Cal Due	~~10/3/02~~ 10/30/02	Cal Due	9/26/02
Bkg	0.2 cpmα	Bkg	4 cpmα	Bkg	5 cpmα
Efficiency	33.00 %	Efficiency	22.90 %	Efficiency	22.10 %
MDA	20 dpmα	MDA	52 dpmα	MDA	59 dpmα
Mfg.	Eberline	Mfg.	NE	Mfg.	NE
Model	BC 4	Model	Electra	Model	Electra
Serial #	704	Serial #	1833	Serial #	2394
Cal Due	10/30/02	Cal Due	3/31/01	Cal Due	9/26/02
Bkg	30 cpmb	Bkg	425 cpmβ	Bkg	403 cpmβ
Efficiency	25.00 %	Efficiency	30.40 %	Efficiency	29.80 %
MDA	200 dpmβ	MDA	324 dpmβ	MDA	322 dpmβ

Survey Type: Contamination- Radiation
Building: Solar Ponds
Location: Solar Ponds
Purpose: Incomming Survey

RWP #: NA

Date: 7/26/02 Time: 17:00

[redacted]

PRN/REN # : NA
Comments: Baseline on backhoe

SURVEY RESULTS

wipe #	Location / Description Results in DPM/100sq.cm	Removable Alpha	Removable Beta	Total Alpha	Total Beta
1	front bucket	< 20	< 200	<59	<324
2	front bucket	< 20	< 200	<59	<324
3	front bucket	< 20	< 200	<59	<324
4	front bucket	< 20	< 200	<59	<324
5	rear bucket	< 20	< 200	<59	<324
6	rear bucket	< 20	< 200	<59	<324
7	rear bucket	< 20	< 200	<59	<324
8	rear bucket	< 20	< 200	<59	<324
9	cab	< 20	< 200	<59	<324
10	cab	< 20	< 200	<59	<324
11	cab	< 20	< 200	<59	<324
12	cab	< 20	< 200	<59	<324
13	NA	NA	NA	NA	NA
14	NA	NA	NA	NA	NA
15	NA	NA	NA	NA	NA
16	NA	NA	NA	NA	NA
17	NA	NA	NA	NA	NA
18	NA	NA	NA	NA	NA
19	NA	NA	NA	NA	NA
20	NA	NA	NA	NA	NA
21	NA	NA	NA	NA	NA
22	NA	NA	NA	NA	NA
23	NA	NA	NA	NA	NA
24	NA	NA	NA	NA	NA
25	NA	NA	NA	NA	NA

MAP

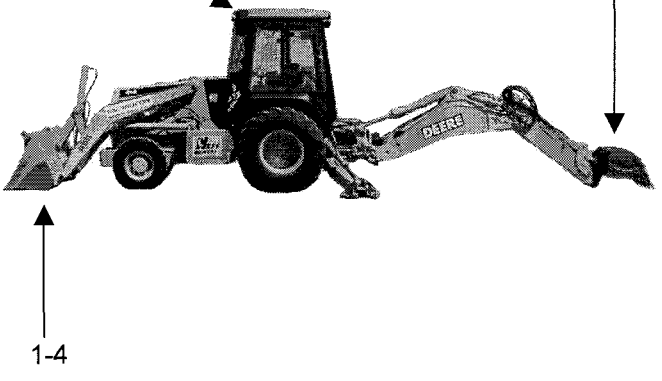

Date Reviewed: 7-26-02 **RS Supervision:** [redacted]

ROCKY FLATS ENVIRONMENTAL TECHNOLOGY SITE

INSTRUMENT DATA

Mfg.	Eberline	Mfg.	NE	Mfg.	NE
Model	SAC 4	Model	Electra	Model	Electra
Serial #	824	Serial #	1681	Serial #	3110
Cal Due	10/30/02	Cal Due	11/22/02	Cal Due	11/29/02
Bkg	0.1 cpmα	Bkg	6 cpmα	Bkg	6 cpmα
Efficiency	33.00 %	Efficiency	22.60 %	Efficiency	21.60 %
MDA	20 dpmα	MDA	62 dpmα	MDA	65 dpmα

Mfg.	Eberline	Mfg.	NE	Mfg.	NE
Model	BC 4	Model	Electra	Model	Electra
Serial #	704	Serial #	1681	Serial #	3110
Cal Due	10/30/02	Cal Due	11/22/02	Cal Due	11/29/02
Bkg	33 cpmb	Bkg	394 cpmβ	Bkg	397 cpmβ
Efficiency	25.00 %	Efficiency	31.50 %	Efficiency	31.20 %
MDA	200 dpmβ	MDA	302 dpmβ	MDA	306 dpmβ

Survey Type: Contamination- Radiation
Building: Solar Ponds
Location: Routine
Purpose: Daily
RWP #: 02-Riss-020
Date: 8/29/02 Time: 15:00

[redacted]

PRN/REN # : NA
Comments: NA

SURVEY RESULTS

Swipe #	Location / Description Results in DPM/100sq.cm	Removable		Total	
		Alpha	Beta	Alpha	Beta
1	Connex table	< 20	< 200	<65	<306
2	Connex table	< 20	< 200	<65	<306
3	Connex table	< 20	< 200	<65	<306
4	Connex table	< 20	< 200	<65	<306
5	Trash barrel, PPE barrel	< 20	< 200	<65	<306
6	Trash barrel, PPE barrel	< 20	< 200	<65	<306
7	Trash barrel, PPE barrel	< 20	< 200	<65	<306
8	Trash barrel, PPE barrel	< 20	< 200	<65	<306
9	Floor	< 20	< 200	<65	<306
10	Floor	< 20	< 200	<65	<306
11	Floor	< 20	< 200	<65	<306
12	Floor	< 20	< 200	<65	<306
13	Shelf	< 20	< 200	<65	<306
14	Shelf	< 20	< 200	<65	<306
15	Shelf	< 20	< 200	<65	<306
16	Shelf	< 20	< 200	<65	<306
17	NA	NA	NA	NA	NA
18	NA	NA	NA	NA	NA
19	NA	NA	NA	NA	NA
20	NA	NA	NA	NA	NA
21	NA	NA	NA	NA	NA
22	NA	NA	NA	NA	NA
23	NA	NA	NA	NA	NA
24	NA	NA	NA	NA	NA
25	NA	NA	NA	NA	NA

MAP

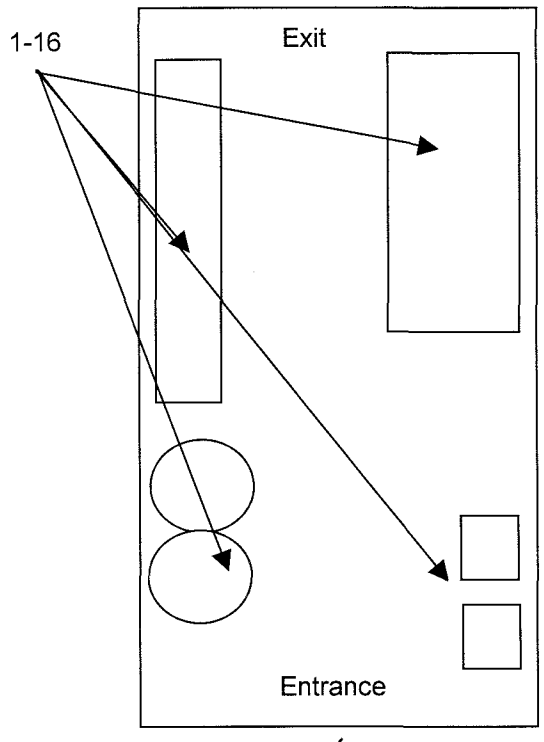

Date Reviewed: 9-9-02 **RS Supervision:** [redacted]

Print Name Signature Emp. #

5

ROCKY FLATS ENVIRONMENTAL TECHNOLOGY SITE

INSTRUMENT DATA

Mfg.	Eberline	Mfg.	NE	Mfg.	NE
Model	SAC 4	Model	Electra	Model	Electra
Serial #	824	Serial #	1681	Serial #	3110
Cal Due	10/30/02	Cal Due	11/22/02	Cal Due	11/29/02
Bkg	0.1 cpmα	Bkg	6 cpmα	Bkg	6 cpmα
Efficiency	33.00 %	Efficiency	22.60 %	Efficiency	21.60 %
MDA	20 dpmα	MDA	62 dpmα	MDA	65 dpmα

Mfg.	Eberline	Mfg.	NE	Mfg.	NE
Model	BC 4	Model	Electra	Model	Electra
Serial #	704	Serial #	1681	Serial #	3110
Cal Due	10/30/02	Cal Due	11/22/02	Cal Due	11/29/02
Bkg	33 cpmβ	Bkg	394 cpmβ	Bkg	397 cpmβ
Efficiency	25.00 %	Efficiency	31.50 %	Efficiency	31.20 %
MDA	200 dpmβ	MDA	302 dpmβ	MDA	306 dpmβ

Survey Type: Contaminaton
Building: Solar Ponds
Location: Solar Ponds
Purpose: daily

RWP #: 02-Riss-020

Date: 8/29/02 Time: 15:00

[redacted]

PRN/REN # : NA
Comments: NA

SURVEY RESULTS

Swipe #	Location / Description Results in DPM/100sq.cm	Removable		Total	
		Alpha	Beta	Alpha	Beta
1	blade	< 20	< 200	<65	<306
2	blade	< 20	< 200	<65	<306
3	blade	< 20	< 200	<65	<306
4	blade	< 20	< 200	<65	<306
5	blade	< 20	< 200	<65	<306
6	body	< 20	< 200	<65	<306
7	body	< 20	< 200	<65	<306
8	body	< 20	< 200	<65	<306
9	body	< 20	< 200	<65	<306
10	body	< 20	< 200	<65	<306
11	END OF SURVEY	NA	NA	NA	NA
12	NA	NA	NA	NA	NA
13	NA	NA	NA	NA	NA
14	NA	NA	NA	NA	NA
15	NA	NA	NA	NA	NA
16	NA	NA	NA	NA	NA
17	NA	NA	NA	NA	NA
18	NA	NA	NA	NA	NA
19	NA	NA	NA	NA	NA
20	NA	NA	NA	NA	NA
21	NA	NA	NA	NA	NA
22	NA	NA	NA	NA	NA
23	NA	NA	NA	NA	NA
24	NA	NA	NA	NA	NA
25	NA	NA	NA	NA	NA

MAP

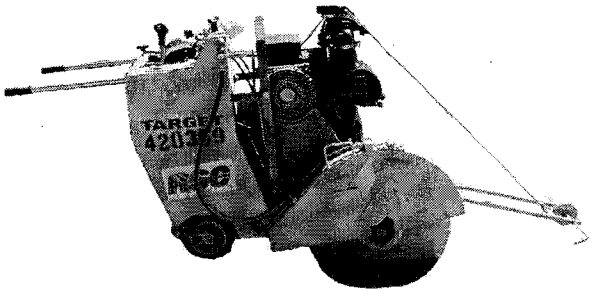

Date Reviewed: 9-9-02 **RS Supervision:** [redacted]

6

ROCKY FLATS ENVIRONMENTAL TECHNOLOGY SITE

INSTRUMENT DATA

Mfg.	Eberline	Mfg.	NE	Mfg.	NE
Model	SAC 4	Model	Electra	Model	Electra
Serial #	824	Serial #	1681	Serial #	3110
Cal Due	10/30/02	Cal Due	11/22/02	Cal Due	11/29/02
Bkg	0.1 cpmα	Bkg	6 cpmα	Bkg	6 cpmα
Efficiency	33.00 %	Efficiency	22.60 %	Efficiency	21.60 %
MDA	20 dpmα	MDA	62 dpmα	MDA	65 dpmα

Mfg.	Eberline	Mfg.	NE	Mfg.	NE
Model	BC 4	Model	Electra	Model	Electra
Serial #	704	Serial #	1681	Serial #	3110
Cal Due	10/30/02	Cal Due	3/31/01	Cal Due	11/29/02
Bkg	33 cpmb	Bkg	394 cpmβ	Bkg	397 cpmβ
Efficiency	25.00 %	Efficiency	31.50 %	Efficiency	31.20 %
MDA	200 dpmβ	MDA	302 dpmβ	MDA	306 dpmβ

Survey Type: Contamination- Radiation
Building: Solar Ponds
Location: Between A and B Pads
Purpose: Daily

RWP #: 02-Riss-020

Date: 8/29/02 Time: 15:00

[redacted]

PRN/REN # : NA
Comments: NA

SURVEY RESULTS

Swipe #	Location / Description Results in DPM/100sq.cm	Removable		Total	
		Alpha	Beta	Alpha	Beta
1	BUCKET	< 20	< 200	<65	<306
2	BUCKET	< 20	< 200	<65	<306
3	BUCKET	< 20	< 200	<65	<306
4	BUCKET	< 20	< 200	<65	<306
5	TRACKS	< 20	< 200	<65	<306
6	TRACKS	< 20	< 200	<65	<306
7	TRACKS	< 20	< 200	<65	<306
8	TRACKS	< 20	< 200	<65	<306
9	CAB	< 20	< 200	<65	<306
10	CAB	< 20	< 200	<65	<306
11	NA	NA	NA	NA	NA
12	NA	NA	NA	NA	NA
13	NA	NA	NA	NA	NA
14	NA	NA	NA	NA	NA
15	NA	NA	NA	NA	NA
16	NA	NA	NA	NA	NA
17	NA	NA	NA	NA	NA
18	NA	NA	NA	NA	NA
19	NA	NA	NA	NA	NA
20	NA	NA	NA	NA	NA
21	NA	NA	NA	NA	NA
22	NA	NA	NA	NA	NA
23	NA	NA	NA	NA	NA
24	NA	NA	NA	NA	NA
25	NA	NA	NA	NA	NA

MAP

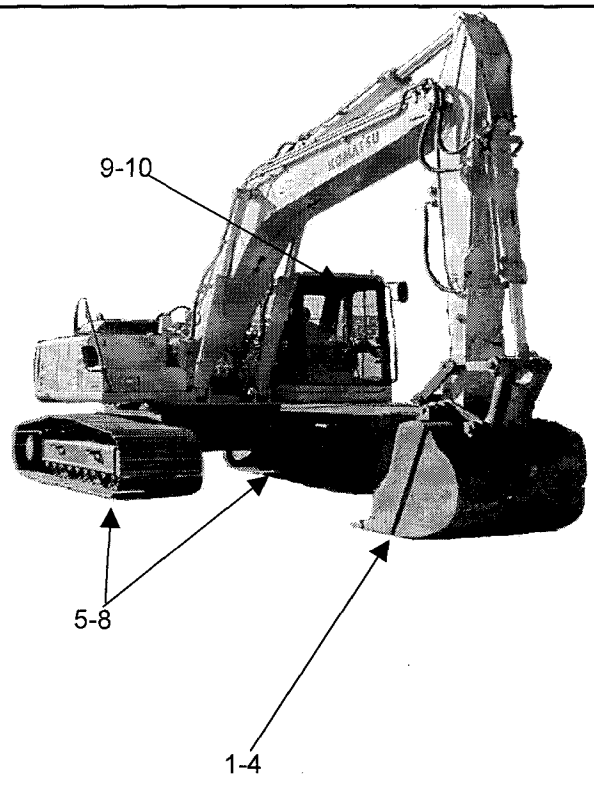

Date Reviewed: 9-9-02 **RS Supervision:** [redacted]

ROCKY FLATS ENVIRONMENTAL TECHNOLOGY SITE

INSTRUMENT DATA

	Eberline	Mfg.	NE	Mfg.	NE
Model	SAC 4	Model	Electra	Model	Electra
Serial #	824	Serial #	1681	Serial #	3110
Cal Due	10/30/02	Cal Due	11/22/02	Cal Due	11/29/02
Bkg	0.1 cpmα	Bkg	6 cpmα	Bkg	6 cpmα
Efficiency	33.00 %	Efficiency	22.60 %	Efficiency	21.60 %
MDA	20 dpmα	MDA	62 dpmα	MDA	65 dpmα
Mfg.	Eberline	Mfg.	NE	Mfg.	NE
Model	BC 4	Model	Electra	Model	Electra
Serial #	704	Serial #	1681	Serial #	3110
Cal Due	10/30/02	Cal Due	11/22/02	Cal Due	11/29/02
Bkg	33 cpmβ	Bkg	394 cpmβ	Bkg	397 cpmβ
Efficiency	25.00 %	Efficiency	31.50 %	Efficiency	31.20 %
MDA	200 dpmβ	MDA	302 dpmβ	MDA	306 dpmβ

Survey Type: Contamination
Building: Solar Ponds
Location: Solar Ponds
Purpose: End of Shift Survey

RWP #: 02-Riss-020

Date: 8/29/02 Time: 15:00

[redacted]

PRN/REN # : NA
Comments: NA

SURVEY RESULTS

Swipe #	Location / Description Results in DPM/100sq.cm	Removable		Total	
		Alpha	Beta	Alpha	Beta
1	Teeth	< 20	< 200	<65	<306
2	I/S bucket	< 20	< 200	<65	<306
3	I/S bucket	< 20	< 200	<65	<306
4	O/S bucket	< 20	< 200	<65	<306
5	O/S bucket	< 20	< 200	<65	<306
6	END OF SURVEY	NA	NA	NA	NA
7	NA	NA	NA	NA	NA
8	NA	NA	NA	NA	NA
9	NA	NA	NA	NA	NA
10	NA	NA	NA	NA	NA
11	NA	NA	NA	NA	NA
12	NA	NA	NA	NA	NA
13	NA	NA	NA	NA	NA
14	NA	NA	NA	NA	NA
15	NA	NA	NA	NA	NA
16	NA	NA	NA	NA	NA
17	NA	NA	NA	NA	NA
18	NA	NA	NA	NA	NA
19	NA	NA	NA	NA	NA
20	NA	NA	NA	NA	NA
21	NA	NA	NA	NA	NA
22	NA	NA	NA	NA	NA
23	NA	NA	NA	NA	NA
24	NA	NA	NA	NA	NA
25	NA	NA	NA	NA	NA

MAP

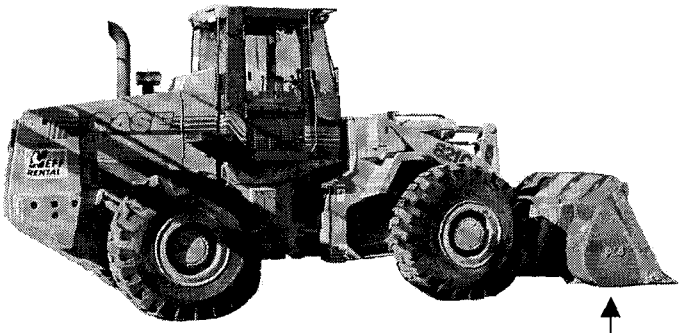

1-5

Date Reviewed: 9-5-02 **RS Supervision:** [redacted]

8

ROCKY FLATS ENVIRONMENTAL TECHNOLOGY SITE

INSTRUMENT DATA

Mfg.	Ludlum	Mfg.	Ludlum	Mfg.	NE Electra
Model	2929	Model	2929	Model	DP-6
Serial #	147735	Serial #	176090	Serial #	1366
Cal Due	1/25/03	Cal Due	11/30/02	Cal Due	2/1/03
Bkg.	0.2 cpm α	Bkg.	0.7 cpm α	Bkg.	4 cpm α
Efficiency	35.3 %	Efficiency	34.8 %	Efficiency	20.4 %
MDA	18 dpm α	MDA	18 dpm α	MDA	59 dpm α
Mfg.	Ludlum	Mfg.	Ludlum	Mfg.	NE Electra
Model	2929	Model	2929	Model	DP-6
Serial #	147735	Serial #	176090	Serial #	1366
Cal Due	1/25/03	Cal Due	11/30/02	Cal Due	2/1/03
Bkg.	66.8 cpm β	Bkg.	83.2 cpm β	Bkg.	428 cpm β
Efficiency	39.8 %	Efficiency	39.5 %	Efficiency	28.2 %
MDA	205 dpm α	MDA	205 dpm α	MDA	351 dpm β

Survey type: Contamination
Building: 788 Pad
Location: 'A' Solar Pond
Purpose: Weekly Routine

RWP #: 02-RISS-020

Date: 8/29/02 Time: 0730

[redacted]

PRN/REN # : NA
Comments: None

SURVEY RESULTS

Swipe #	LOCATION/DESCRIPTION	ALPHA			BETA		
		Swipe dpm/100cm2	Direct dpm/100cm2	Wipe dpm/wipe	Swipe dpm/100cm2	Direct dpm/100cm2	Wipe dpm/wipe
1	Concrete	<18	NA	NA	<205	NA	NA
2	Concrete	<18			<205		
3	Concrete	<18			<205		
4	Concrete	<18			<205		
5	Concrete	<18			<205		
6	Concrete	<18			<205		
7	Concrete	<18			<205		
8	Concrete	<18			<205		
9	Saw Cutter	<18			<205		
10	Step Off Pad	<18			<205		
11	Drum	<18			<205		
12	Concrete	<18		↓	<205		↓
13	Concrete	<18		NA	<205		NA
14	Concrete	<18		<59	<205		<351
15	Concrete	NA		<59	NA		<351
NA	NA			NA			NA
↓	↓	↓	↓	↓	↓	↓	↓
NA	NA	NA	NA	NA	NA	NA	NA

Date Reviewed: 9-5-02 **RS Supervision:** [redacted]

Print Name Signature Emp. #

9

ROCKY FLATS ENVIRONMENTAL TECHNOLOGY SITE

Drawing Showing Survey Points

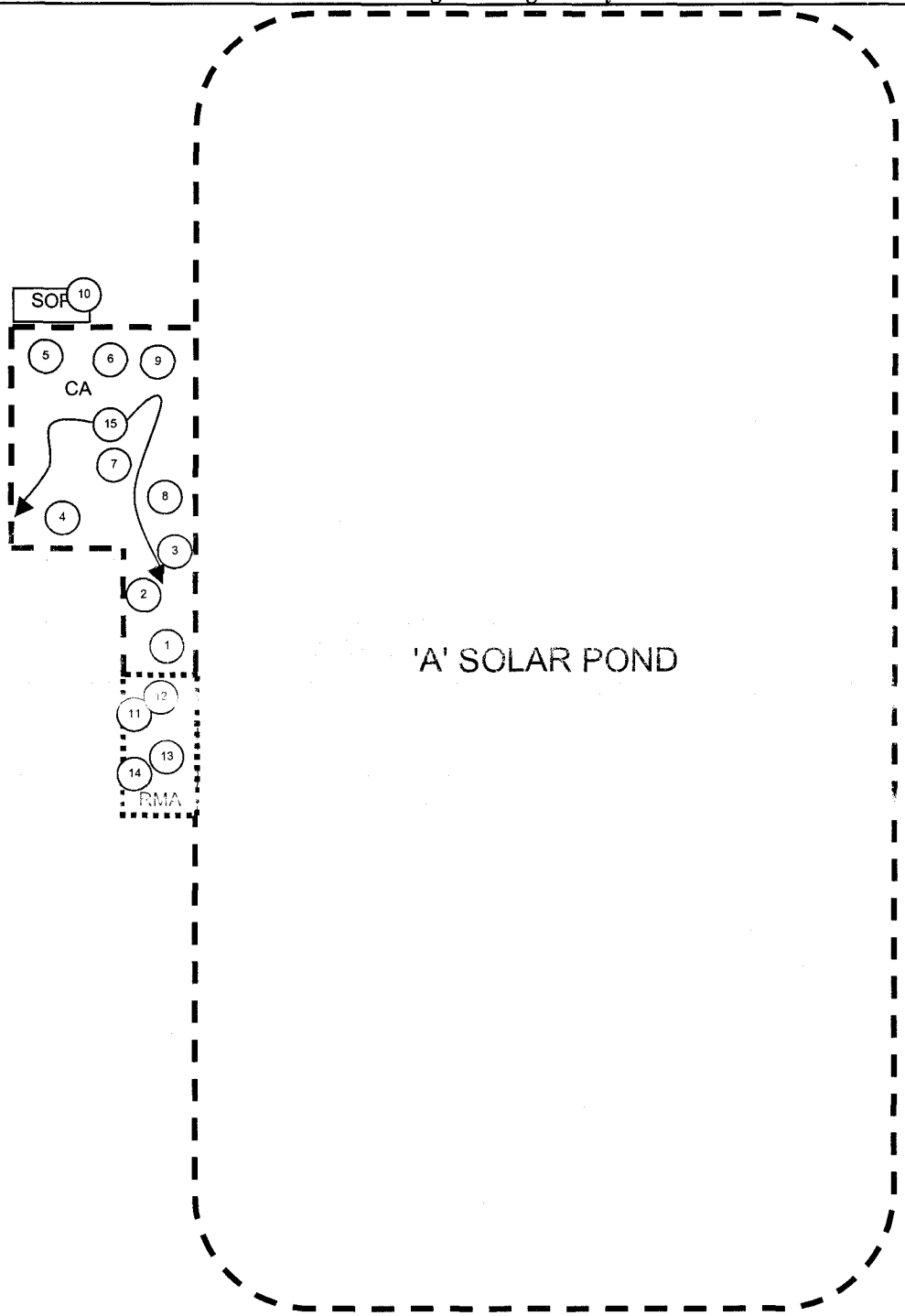

10

ROCKY FLATS ENVIRONMENTAL TECHNOLOGY SITE

INSTRUMENT DATA

Mfg.	Eberline	Mfg.	Eberline	Mfg.	NE Electra
Model	SAC-4	Model	BC-4	Model	DP-6
Serial #	824	Serial #	704	Serial #	3252
Cal Due	10/1/02	Cal Due	10/30/02	Cal Due	2/6/03
Bkg	0.1 cpmα	Bkg	33 cpmβ	Bkg	6 cpmα
Eff.	33 %	Eff.	25 %	Eff.	22.8 %
MDA	20 dpmα	MDA	200 dpmβ	MDA	62 dpmα
Mfg.	Eberline	Mfg.	Eberline	Mfg.	NE Electra
Model	SAC-4	Model	BC-4	Model	DP-6
Serial #	n/a	Serial #	n/a	Serial #	3252
Cal Due	n/a	Cal Due	n/a	Cal Due	2/6/03
Bkg	n/a cpmα	Bkg	n/a cpmβ	Bkg	596 cpmβ
Eff.	33 %	Eff.	25 %	Eff.	32 %
MDA	20 dpmα	MDA	200 dpmβ	MDA	363 dpmβ

Survey Type: contamination
Building: 788
Location: concrete slabs
Purpose: release survey

RWP #: 02-RISS-020

Date: 8/29/02 Time: 0900

[redacted]

PRN/REN # : n/a
Comments: PAT = TO SWIPE #

SURVEY RESULTS

Swipe	LOCATION	ALPHA Swipe	ALPHA Direct	ALPHA Wipe	BETA Swipe	BETA Direct	BETA Wipe
#	see map	dpm/100cm2	dpm/100cm2	dpm/wipe	dpm/100cm2	dpm/100cm2	dpm/wipe
1	concrete	0	24	NA	0	194	NA
2	concrete	0	16	NA	12	204	NA
3	concrete	0	16	NA	48	269	NA
4	concrete	0	3	NA	0	368	NA
5	concrete	0	9	NA	0	227	NA
6	concrete	0	10	NA	32	204	NA
7	concrete	0	11	NA	0	328	NA
8	concrete	0	3	NA	0	358	NA
9	NA	NA	NA	NA	NA	NA	NA
10	NA	NA	NA	NA	NA	NA	NA
11	NA	NA	NA	NA	NA	NA	NA
12	NA	NA	NA	NA	NA	NA	NA
13	NA	NA	NA	NA	NA	NA	NA
14	NA	NA	NA	NA	NA	NA	NA
15	NA	NA	NA	NA	NA	NA	NA
16	NA	NA	NA	NA	NA	NA	NA
17	NA	NA	NA	NA	NA	NA	NA
18	NA	NA	NA	NA	NA	NA	NA
19	NA	NA	NA	NA	NA	NA	NA
NA	NA	NA	NA	NA	NA	NA	NA

Date Reviewed: 9-9-02 **RS Supervision:** [redacted]

11

ROCKY FLATS ENVIRONMENTAL TECHNOLOGY SITE

Drawing Showing Survey Points

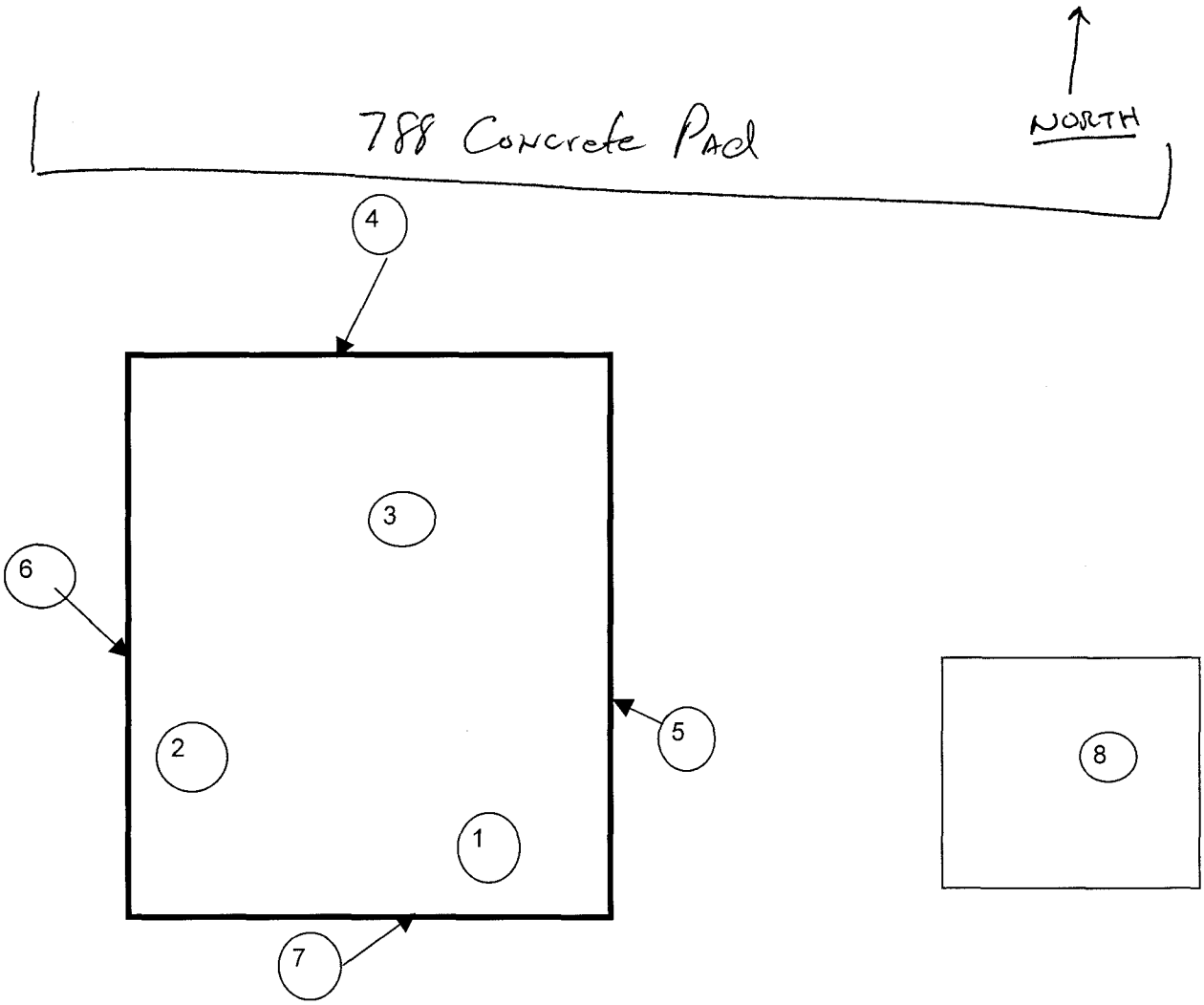

12

ROCKY FLATS ENVIRONMENTAL TECHNOLOGY SITE

INSTRUMENT DATA

Mfg.	Eberline	Mfg.	Eberline	Mfg.	NE Electra
Model	SAC-4	Model	BC-4	Model	DP-6
Serial #	824	Serial #	704	Serial #	3252
Cal Due	10/1/02	Cal Due	10/30/02	Cal Due	2/6/03
Bkg	0.1 cpmα	Bkg	33 cpmβ	Bkg	6 cpmα
Eff.	33 %	Eff.	25 %	Eff.	22.8 %
MDA	20 dpmα	MDA	200 dpmβ	MDA	62 dpmα

Mfg.	Eberline	Mfg.	Eberline	Mfg.	NE Electra
Model	SAC-4	Model	BC-4	Model	DP-6
Serial #	n/a	Serial #	n/a	Serial #	3252
Cal Due	n/a	Cal Due	n/a	Cal Due	2/6/03
Bkg	n/a cpmα	Bkg	n/a cpmβ	Bkg	596 cpmβ
Eff.	33 %	Eff.	25 %	Eff.	32 %
MDA	20 dpmα	MDA	200 dpmβ	MDA	363 dpmβ

Survey Type: contamination
Building: 788
Location: SOUTH ACCESS RAMP16
Purpose: release survey

RWP #: 02-RISS-020

Date: 8/29/02 Time: 0900

[redacted]

RCT: NA / NA / NA
Print name Signature Emp. #

PRN/REN # : n/a
Comments: 100% SCAN------SWIPES------PATS

SURVEY RESULTS

		ALPHA			BETA		
Swipe #	LOCATION see map	Swipe dpm/100cm2	Direct dpm/100cm2	Wipe dpm/wipe	Swipe dpm/100cm2	Direct dpm/100cm2	Wipe dpm/wipe
1	RAMP	0	15	na	32	904	na
2	RAMP		22		16	859	
3	RAMP		32		36	526	
4	RAMP		28		29	858	
5	RAMP		32		29	736	
6	RAMP		23		34	899	
7	RAMP		33		32	630	
8	RAMP		28		29	1100	
9	RAMP		18		36	1154	
10	RAMP		14		43	741	
11	RAMP		19		39	821	
12	RAMP		18		34	803	
13	RAMP		32		26	768	
14	RAMP		21		38	721	
15	RAMP		26		36	861	
16	RAMP		28		22	944	
17	RAMP		30		33	900	
18	RAMP		33		30	1308	
19	RAMP		28		29	1056	
20	RAMP	0	17	na	37	1008	na

Date Reviewed: _____ **RS Supervision:** [redacted]

801

830

Swipe #	LOCATION see map	ALPHA Swipe dpm/100cm2	Direct dpm/100cm2	Wipe dpm/wipe	Swipe dpm/100cm2	Direct dpm/100cm2	Wipe dpm/wipe
21	RAMP	0	18	NA	39	884	NA
22	RAMP		18	NA	33	752	NA
23	RAMP		17	NA	31	762	NA
24	RAMP		16	NA	45	862	NA
25	RAMP	0	20	NA	43	776	NA
na	na	na	na	na	na	na	na
na	na	na	na	na	na	na	na

Drawing Showing Survey Points

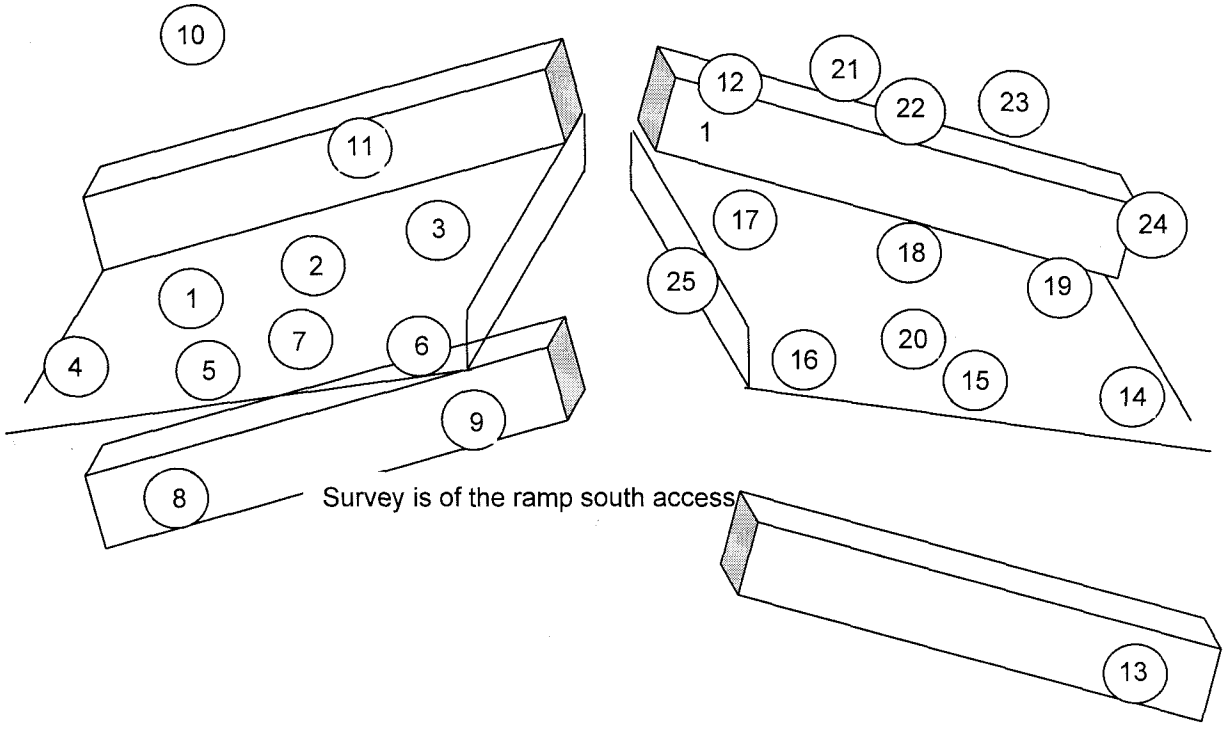

Survey is of the ramp south access

ROCKY FLATS ENVIRONMENTAL TECHNOLOGY SITE

INSTRUMENT DATA

Mfg.	Ludlum	Mfg.	Ludlum	Mfg.	NE Electra
Model	2929	Model	2929	Model	DP-6
Serial #	147735	Serial #	176090	Serial #	1366
Cal Due	1/25/03	Cal Due	11/30/02	Cal Due	2/1/03
Bkg.	0.3 cpm α	Bkg.	0.7 cpm α	Bkg.	5 cpm α
Efficiency	35.3 %	Efficiency	34.8 %	Efficiency	20.4 %
MDA	18 dpm α	MDA	18 dpm α	MDA	64 dpm α
Mfg.	Ludlum	Mfg.	Ludlum	Mfg.	NE Electra
Model	2929	Model	2929	Model	DP-6
Serial #	147735	Serial #	176090	Serial #	1366
Cal Due	1/25/03	Cal Due	11/30/02	Cal Due	2/1/03
Bkg.	65.7 cpm β	Bkg.	88.6 cpm β	Bkg.	412 cpm β
Efficiency	39.8 %	Efficiency	39.5 %	Efficiency	28.2 %
MDA	205 dpm α	MDA	205 dpm α	MDA	344 dpm β

Survey type: Contamination
Building: 788 Pad
Location: A' Solar Pond
Purpose: Process/Distillate Return Line Removal
RWP #: 02-RISS-020
Date: 8/28/02 Time: 1030
[redacted]
RCT: NA / NA / NA
Print name Signature Emp. #

PRN/REN # : NA
Comments: Performed swipe and 60 second PAT survey on piping listed below on pipe ends after being cut.
SCO Plan #

SURVEY RESULTS

Swipe #	LOCATION/DESCRIPTION	ALPHA			BETA		
		Swipe	Direct	Wipe	Swipe	Direct	Wipe
		dpm/100cm2	dpm/100cm2	dpm/wipe	dpm/100cm2	dpm/100cm2	dpm/wipe
1	6" Process Line at Cut End	<18	18	NA	<205	0	NA
2	6" Process Line at Cut End	<18	24		<205	0	
3	6" Process Line at Cut End	<18	18		<205	0	
4	6" Process Line at Cut End	<18	6		<205	0	
5	6" Process Line at Cut End	<18	54		<205	36	
6	6" Process Line at Cut End	<18	24		<205	0	
7	6" Process Line at Cut End	<18	36		<205	24	
8	6" Process Line at Cut End	<18	18		<205	0	
9	6" Process Line at Cut End	<18	18		<205	0	
10	6" Process Line at Cut End	<18	42		<205	0	
11	6" Process Line at Cut End	<18	72		<205	54	
12	6" Process Line at Cut End	<18	78		<205	60	
13	6" Process Line at Cut End	<18	48		<205	12	
14	6" Process Line at Cut End	<18	18		<205	0	
15	6" Process Line at Cut End	<18	30		<205	0	
16	3" Distillate Return Line at Cut End	<18	12		<205	0	
17	3" Distillate Return Line at Cut End	<18	18		<205	0	
18	3" Distillate Return Line at Cut End	<18	18		<205	0	
19	3" Distillate Return Line at Cut End	<18	24		<205	0	
20	3" Distillate Return Line at Cut End	<18	42	NA	<205	18	NA

Date Reviewed: 8-29-02 **RS Supervisio** [redacted]

16

ROCKY FLATS ENVIRONMENTAL TECHNOLOGY SITE

SURVEY RESULTS

Swipe	LOCATION	ALPHA			BETA		
		Swipe	Direct	Wipe	Swipe	Direct	Wipe
#		dpm/100cm2	dpm/100cm2	dpm/wipe	dpm/100cm2	dpm/100cm2	dpm/wipe
21	3" Distillate Return Line at Cut End	<18	36	NA	205	12	NA
22	3" Distillate Return Line at Cut End	<18	36		205	0	
23	3" Distillate Return Line at Cut End	<18	18		205	0	
24	3" Distillate Return Line at Cut End	<18	12		205	0	
25	3" Distillate Return Line at Cut End	<18	24		205	0	
26	3" Distillate Return Line at Cut End	<18	12		205	0	
27	3" Distillate Return Line at Cut End	<18	6		205	0	
28	3" Distillate Return Line at Cut End	<18	30		205	0	
29	3" Distillate Return Line at Cut End	<18	24		205	0	
30	3" Distillate Return Line at Cut End	<18	24		205	0	
NA	NA	NA	NA		NA	NA	
▼	▼	▼	▼	▼	▼	▼	▼
NA	NA	NA	NA	NA	NA	NA	NA

17

ROCKY FLATS ENVIRONMENTAL TECHNOLOGY SITE

INSTRUMENT DATA

Mfg.	Eberline	Mfg.	Eberline	Mfg.	NE Electra
Model	SAC-4	Model	BC-4	Model	DP-6
Serial #	824	Serial #	704	Serial #	1388
Cal Due	10/1/02	Cal Due	10/30/02	Cal Due	1/29/03
Bkg	0.1 cpmα	Bkg	33.9 cpmβ	Bkg	6 cpmα
Eff.	33 %	Eff.	25 %	Eff.	22.0 %
MDA	20 dpmα	MDA	200 dpmβ	MDA	64 dpmα

Mfg.	Eberline	Mfg.	Eberline	Mfg.	NE Electra
Model	SAC-4	Model	BC-4	Model	DP-6
Serial #	NA	Serial #	NA	Serial #	1388
Cal Due	NA	Cal Due	NA	Cal Due	1/29/03
Bkg	cpmα	Bkg	cpmβ	Bkg	423 cpmβ
Eff.	33 %	Eff.	25 %	Eff.	32.1 %
MDA	20 dpmα	MDA	200 dpmβ	MDA	306 dpmβ

Survey Type: Contamination
Building: 788
Location: general area
Purpose: daily

RWP #: 02-RISS-020

Date: 8/27/02 Time: 1400

[redacted]

PRN/REN # : NA
Comments:

SURVEY RESULTS

Swipe #	LOCATION	ALPHA Swipe	ALPHA Direct	ALPHA Wipe	BETA Swipe	BETA Direct	BETA Wipe
		dpm/100cm2	dpm/100cm2	dpm/wipe	dpm/100cm2	dpm/100cm2	dpm/wipe
1	loader	< 20	< 64	NA	< 200	< 306	NA
2	loader	< 20	< 64	NA	< 200	< 306	NA
3	loader	< 20	< 64	NA	< 200	< 306	NA
4	loader	< 20	< 64	NA	< 200	< 306	NA
5	loader	< 20	< 64	NA	< 200	< 306	NA
6	backhoe	< 20	< 64	NA	< 200	< 306	NA
7	backhoe	< 20	< 64	NA	< 200	< 306	NA
8	backhoe	< 20	< 64	NA	< 200	< 306	NA
9	backhoe	< 20	< 64	NA	< 200	< 306	NA
10	backhoe	< 20	< 64	NA	< 200	< 306	NA
11	concrete saw	< 20	< 64	NA	< 200	< 306	NA
12	concrete saw	< 20	< 64	NA	< 200	< 306	NA
13	concrete saw	< 20	< 64	NA	< 200	< 306	NA
14	concrete saw	< 20	< 64	NA	< 200	< 306	NA
15	concrete saw	< 20	< 64	NA	< 200	< 306	NA
NA	NA	NA	NA	NA	NA	NA	NA
NA	NA	NA	NA	NA	NA	NA	NA
NA	NA	NA	NA	NA	NA	NA	NA
NA	NA	NA	NA	NA	NA	NA	NA
NA	NA	NA	NA	NA	NA	NA	NA

Date Reviewed: 9-5-02 **RS Supervision:** [redacted]

ROCKY FLATS ENVIRONMENTAL TECHNOLOGY SITE

Drawing Showing Survey Points

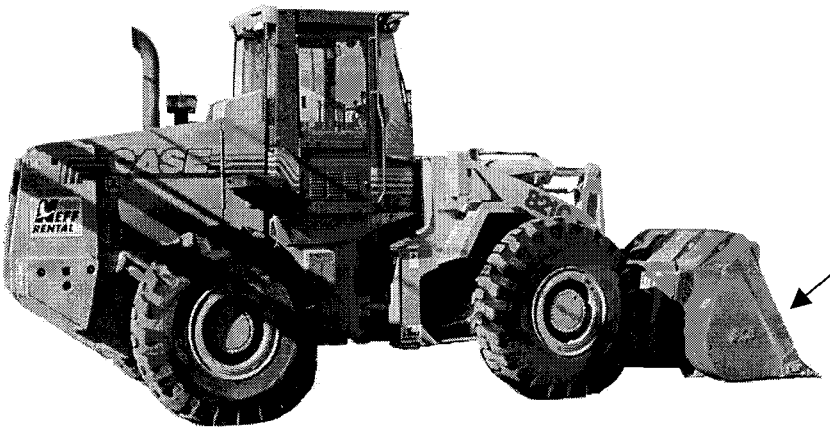

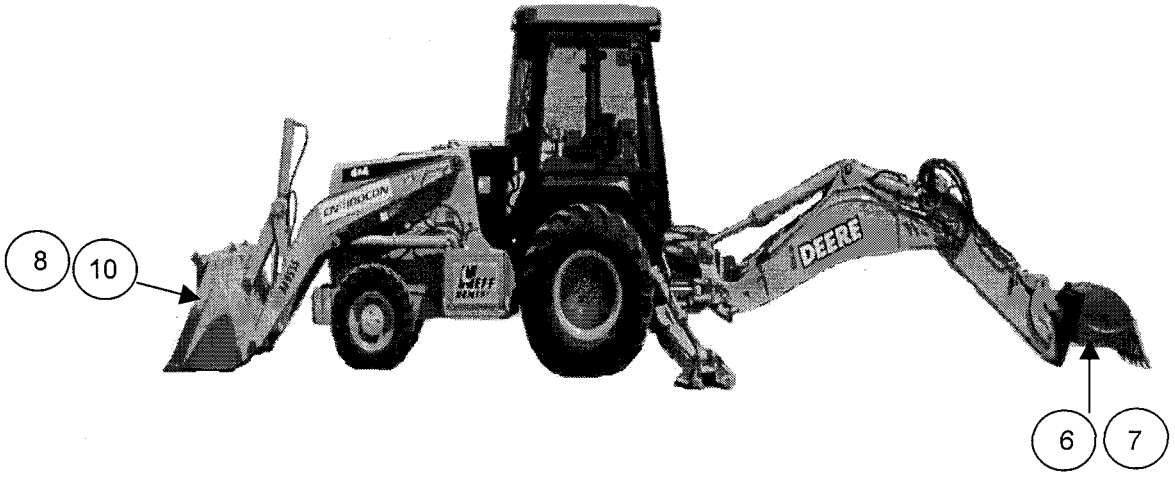

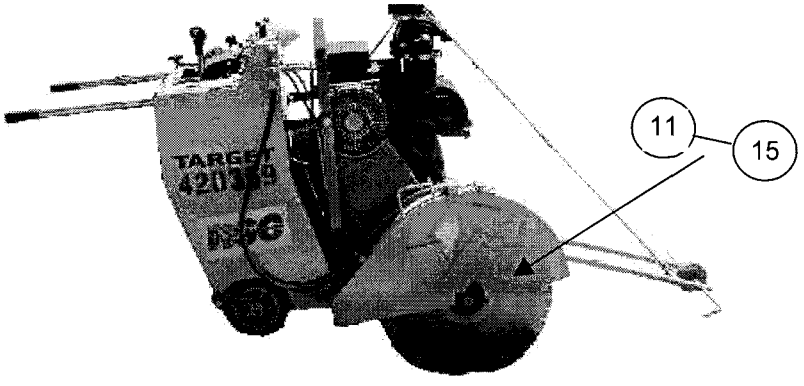

ROCKY FLATS ENVIRONMENTAL TECHNOLOGY SITE

INSTRUMENT DATA

Mfg.	Eberline	Mfg.	NE	Mfg.	NE
Model	SAC 4	Model	Electra	Model	Electra
Serial #	824	Serial #	1833	Serial #	1381
Cal Due	10/30/02	Cal Due	10/3/02	Cal Due	9/28/02
Bkg	0.3 cpmα	Bkg	1 cpmα	Bkg	1 cpmα
Efficiency	33.00 %	Efficiency	23.30 %	Efficiency	21.60 %
MDA	20 dpmα	MDA	32 dpmα	MDA	34 dpmα

Mfg.	Eberline	Mfg.	NE	Mfg.	NE
Model	BC 4	Model	Electra	Model	Electra
Serial #	704	Serial #	2344	Serial #	1381
Cal Due	10/30/02	Cal Due	10/3/02	Cal Due	9/28/02
Bkg	34.1 cpmb	Bkg	373 cpmβ	Bkg	416 cpmβ
Efficiency	25.00 %	Efficiency	31.70 %	Efficiency	31.50 %
MDA	200 dpmβ	MDA	292 dpmβ	MDA	310 dpmβ

Survey Type: Contamination- Radiation
Building: Solar Ponds
Location: Routine
Purpose: Daily

RWP #: 02-Riss-020

Date: 8/26/02 Time: 15:00

[redacted]

Print name Signature Emp. #

PRN/REN # : NA
Comments: NA

SURVEY RESULTS

Swipe #	Location / Description Results in DPM/100sq.cm	Removable Alpha	Removable Beta	Total Alpha	Total Beta
1	Connex table	< 20	< 200	<34	<310
2	Connex table	< 20	< 200	<34	<310
3	Connex table	< 20	< 200	<34	<310
4	Connex table	< 20	< 200	<34	<310
5	Trash barrel, PPE barrel	< 20	< 200	<34	<310
6	Trash barrel, PPE barrel	< 20	< 200	<34	<310
7	Trash barrel, PPE barrel	< 20	< 200	<34	<310
8	Trash barrel, PPE barrel	< 20	< 200	<34	<310
9	Floor	< 20	< 200	<34	<310
10	Floor	< 20	< 200	<34	<310
11	Floor	< 20	< 200	<34	<310
12	Floor	< 20	< 200	<34	<310
13	Shelf	< 20	< 200	<34	<310
14	Shelf	< 20	< 200	<34	<310
15	Shelf	< 20	< 200	<34	<310
16	Shelf	< 20	< 200	<34	<310
17	NA	NA	NA	NA	NA
18	NA	NA	NA	NA	NA
19	NA	NA	NA	NA	NA
20	NA	NA	NA	NA	NA
21	NA	NA	NA	NA	NA
22	NA	NA	NA	NA	NA
23	NA	NA	NA	NA	NA
24	NA	NA	NA	NA	NA
25	NA	NA	NA	NA	NA

MAP

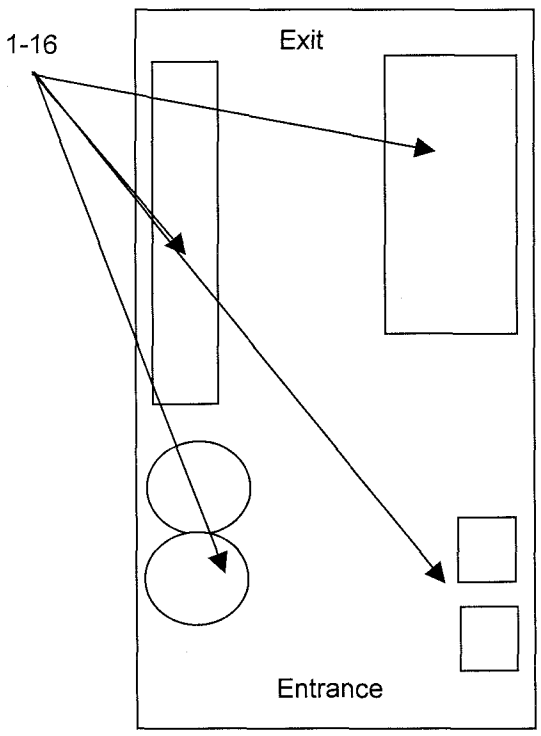

Date Reviewed: 9-9-02 **RS Supervision:** [redacted]

30

ROCKY FLATS ENVIRONMENTAL TECHNOLOGY SITE

INSTRUMENT DATA

Mfg.	Eberline	Mfg.	NE	Mfg.	NE
Model	SAC 4	Model	Electra	Model	Electra
Serial #	824	Serial #	1833	Serial #	1381
Cal Due	10/30/02	Cal Due	10/3/02	Cal Due	9/28/02
Bkg	0.3 cpmα	Bkg	1 cpmα	Bkg	1 cpmα
Efficiency	33.00 %	Efficiency	23.30 %	Efficiency	21.60 %
MDA	20 dpmα	MDA	32 dpmα	MDA	34 dpmα

Mfg.	Eberline	Mfg.	NE	Mfg.	NE
Model	BC 4	Model	Electra	Model	Electra
Serial #	704	Serial #	2344	Serial #	1381
Cal Due	10/30/02	Cal Due	3/31/01	Cal Due	9/28/02
Bkg	34.1 cpmb	Bkg	373 cpmβ	Bkg	416 cpmβ
Efficiency	25.00 %	Efficiency	31.70 %	Efficiency	31.50 %
MDA	200 dpmβ	MDA	292 dpmβ	MDA	310 dpmβ

Survey Type: Contamination- Radiation
Building: Solar Ponds
Location: Between A and B Pads
Purpose: Daily

RWP #: 02-Riss-020

Date: 8/26/02 Time: 15:00

[redacted]

PRN/REN # : NA
Comments: NA

SURVEY RESULTS

Swipe #	Location / Description Results in DPM/100sq.cm	Removable		Total	
		Alpha	Beta	Alpha	Beta
1	BUCKET	< 20	< 200	<34	<310
2	BUCKET	< 20	< 200	<34	<310
3	BUCKET	< 20	< 200	<34	<310
4	BUCKET	< 20	< 200	<34	<310
5	TRACKS	< 20	< 200	<34	<310
6	TRACKS	< 20	< 200	<34	<310
7	TRACKS	< 20	< 200	<34	<310
8	TRACKS	< 20	< 200	<34	<310
9	CAB	< 20	< 200	<34	<310
10	CAB	< 20	< 200	<34	<310
11	NA	NA	NA	NA	NA
12	NA	NA	NA	NA	NA
13	NA	NA	NA	NA	NA
14	NA	NA	NA	NA	NA
15	NA	NA	NA	NA	NA
16	NA	NA	NA	NA	NA
17	NA	NA	NA	NA	NA
18	NA	NA	NA	NA	NA
19	NA	NA	NA	NA	NA
20	NA	NA	NA	NA	NA
21	NA	NA	NA	NA	NA
22	NA	NA	NA	NA	NA
23	NA	NA	NA	NA	NA
24	NA	NA	NA	NA	NA
25	NA	NA	NA	NA	NA

MAP

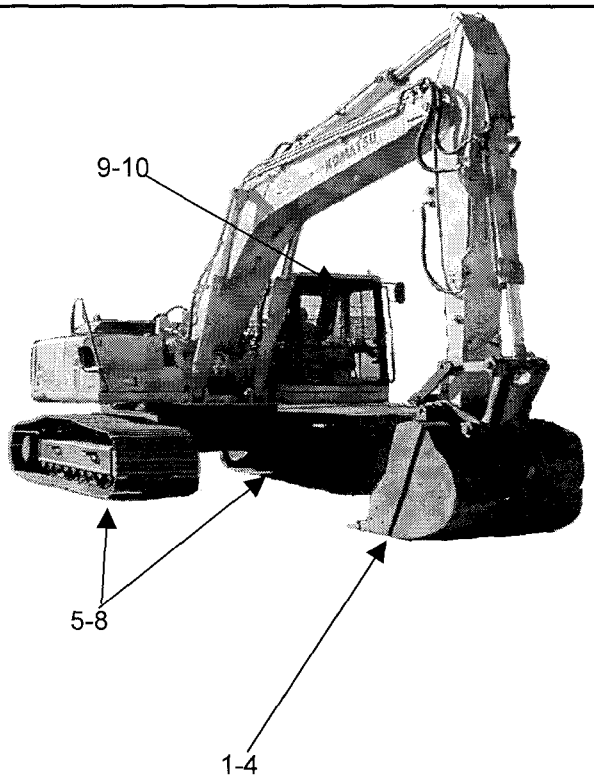

Date Reviewed: 9-9-02 **RS Supervision:** [redacted]

ROCKY FLATS ENVIRONMENTAL TECHNOLOGY SITE

INSTRUMENT DATA

Mfg.	Eberline	Mfg.	NE	Mfg.	NE
Model	SAC 4	Model	Electra	Model	Electra
Serial #	824	Serial #	1833	Serial #	1381
Cal Due	10/30/02	Cal Due	10/03/02	Cal Due	09/28/02
Bkg	0.3 cpmα	Bkg	1 cpmα	Bkg	1 cpmα
Efficiency	33.00 %	Efficiency	23.30 %	Efficiency	21.60 %
MDA	20 dpmα	MDA	32 dpmα	MDA	34 dpmα

Mfg.	Eberline	Mfg.	NE	Mfg.	NE
Model	BC 4	Model	Electra	Model	Electra
Serial #	704	Serial #	2344	Serial #	1381
Cal Due	10/30/02	Cal Due	10/03/02	Cal Due	09/28/02
Bkg	34.1 cpmβ	Bkg	373 cpmβ	Bkg	416 cpmβ
Efficiency	25.00 %	Efficiency	31.70 %	Efficiency	31.50 %
MDA	200 dpmβ	MDA	292 dpmβ	MDA	310 dpmβ

Survey Type: Contaminaton

Building: Solar Ponds

Location: Solar Ponds

Purpose: daily

RWP #: 02-Riss-020

Date: 8/26/02 Time: 15:00

[redacted]

RCT: NA / / NA

Print name Signature Emp. #

PRN/REN # : NA

Comments: NA

SURVEY RESULTS

Swipe #	Location / Description Results in DPM/100sq.cm	Removable		Total	
		Alpha	Beta	Alpha	Beta
1	blade	< 20	< 200	<34	<310
2	blade	< 20	< 200	<34	<310
3	blade	< 20	< 200	<34	<310
4	blade	< 20	< 200	<34	<310
5	blade	< 20	< 200	<34	<310
6	body	< 20	< 200	<34	<310
7	body	< 20	< 200	<34	<310
8	body	< 20	< 200	<34	<310
9	body	< 20	< 200	<34	<310
10	body	< 20	< 200	<34	<310
11	END OF SURVEY	NA	NA	NA	NA
12	NA	NA	NA	NA	NA
13	NA	NA	NA	NA	NA
14	NA	NA	NA	NA	NA
15	NA	NA	NA	NA	NA
16	NA	NA	NA	NA	NA
17	NA	NA	NA	NA	NA
18	NA	NA	NA	NA	NA
19	NA	NA	NA	NA	NA
20	NA	NA	NA	NA	NA
21	NA	NA	NA	NA	NA
22	NA	NA	NA	NA	NA
23	NA	NA	NA	NA	NA
24	NA	NA	NA	NA	NA
25	NA	NA	NA	NA	NA

MAP

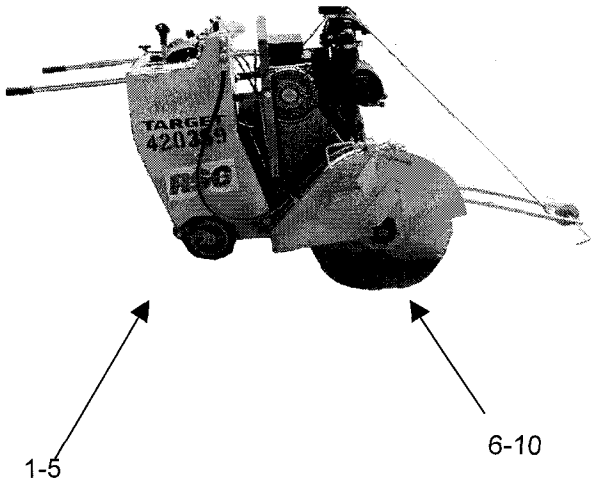

Date Reviewed: 9-5-02 **RS Supervision:** [redacted]

ROCKY FLATS ENVIRONMENTAL TECHNOLOGY SITE

INSTRUMENT DATA

	Eberline	Mfg.	NE	Mfg.	NE
Model	SAC 4	Model	Electra	Model	Electra
Serial #	824	Serial #	1833	Serial #	1381
Cal Due	10/30/02	Cal Due	10/03/02	Cal Due	9/28/02
Bkg	0.5 cpmα	Bkg	1 cpmα	Bkg	1 cpmα
Efficiency	33.00 %	Efficiency	23.30 %	Efficiency	21.60 %
MDA	20 dpmα	MDA	32 dpmα	MDA	34 dpmα

Mfg.	Eberline	Mfg.	NE	Mfg.	NE
Model	BC 4	Model	Electra	Model	Electra
Serial #	704	Serial #	2344	Serial #	1381
Cal Due	10/30/02	Cal Due	10/03/02	Cal Due	9/28/02
Bkg	35.2 cpmβ	Bkg	373 cpmβ	Bkg	416 cpmβ
Efficiency	25.00 %	Efficiency	31.70 %	Efficiency	31.50 %
MDA	200 dpmβ	MDA	292 dpmβ	MDA	310 dpmβ

Survey Type: Contamination
Building: Solar Ponds
Location: Solar Ponds
Purpose: End of Shift Survey

RWP #: 02-Riss-020

Date: 8/26/02 Time: 15:00

[redacted]

PRN/REN # : NA
Comments: NA

SURVEY RESULTS

Swipe #	Location / Description Results in DPM/100sq.cm	Removable		Total	
		Alpha	Beta	Alpha	Beta
1	Teeth	< 20	< 200	<34	<310
2	I/S bucket	< 20	< 200	<34	<310
3	I/S bucket	< 20	< 200	<34	<310
4	O/S bucket	< 20	< 200	<34	<310
5	O/S bucket	< 20	< 200	<34	<310
6	END OF SURVEY	NA	NA	NA	NA
7	NA	NA	NA	NA	NA
8	NA	NA	NA	NA	NA
9	NA	NA	NA	NA	NA
10	NA	NA	NA	NA	NA
11	NA	NA	NA	NA	NA
12	NA	NA	NA	NA	NA
13	NA	NA	NA	NA	NA
14	NA	NA	NA	NA	NA
15	NA	NA	NA	NA	NA
16	NA	NA	NA	NA	NA
17	NA	NA	NA	NA	NA
18	NA	NA	NA	NA	NA
19	NA	NA	NA	NA	NA
20	NA	NA	NA	NA	NA
21	NA	NA	NA	NA	NA
22	NA	NA	NA	NA	NA
23	NA	NA	NA	NA	NA
24	NA	NA	NA	NA	NA
25	NA	NA	NA	NA	NA

MAP

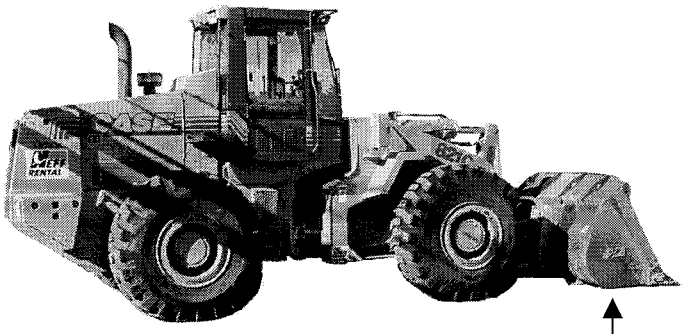

Date Reviewed: 9-5-02 **RS Supervision:** [redacted]

ROCKY FLATS ENVIRONMENTAL TECHNOLOGY SITE

INSTRUMENT DATA

Mfg. Ludlum	Mfg. Ludlum	Mfg. NE Electra
Model 2929	Model 2929	Model DP-6
Serial # 147735	Serial # 176090	Serial # 1366
Cal Due 1/25/03	Cal Due 11/30/02	Cal Due 2/1/03
Bkg. 0.4 cpm α	Bkg. 0.7 cpm α	Bkg. 3 cpm α
Efficiency 35.3 %	Efficiency 34.8 %	Efficiency 20.4 %
MDA 18 dpm α	MDA 18 dpm α	MDA 53 dpm α
Mfg. Ludlum	Mfg. Ludlum	Mfg. NE Electra
Model 2929	Model 2929	Model DP-6
Serial # 147735	Serial # 176090	Serial # 1366
Cal Due 1/25/03	Cal Due 11/30/02	Cal Due 2/1/03
Bkg. 66.8 cpm β	Bkg. 85.1 cpm β	Bkg. 338 cpm β
Efficiency 39.8 %	Efficiency 39.5 %	Efficiency 28.2 %
MDA 205 dpm α	MDA 205 dpm α	MDA 313 dpm β

Survey type: Contamination
Building: 788 Pad
Location: 'A' Solar Pond
Purpose: Weekly Routine

RWP #: 02-RISS-020

Date: 8/23/02 Time: 1500

[redacted]

RCT: NA / NA / NA
Print name Signature Emp. #

PRN/REN # : NA
Comments: None

SURVEY RESULTS

Swipe #	LOCATION/DESCRIPTION	ALPHA Swipe dpm/100cm2	ALPHA Direct dpm/100cm2	ALPHA Wipe dpm/wipe	BETA Swipe dpm/100cm2	BETA Direct dpm/100cm2	BETA Wipe dpm/wipe
1	Concrete	<18	NA	NA	<205	NA	NA
2	Concrete	<18			<205		
3	Concrete	<18			<205		
4	Concrete	<18			<205		
5	Concrete	<18			<205		
6	Concrete	<18			<205		
7	Concrete	<18			<205		
8	Concrete	<18			<205		
9	Concrete	<18			<205		
10	Saw Cutter	<18			<205		
11	Step Off Pad	<18			<205		
12	Concrete	<18			<205		
13	Drum	<18			<205		
14	Concrete	<18		NA	<205		NA
15	Concrete	NA		<53	NA		<313
NA	NA			NA			NA
NA	NA	NA	NA	NA	NA	NA	NA

Date Reviewed: 9-5-02 **RS Supervision:** [redacted]

ROCKY FLATS ENVIRONMENTAL TECHNOLOGY SITE

Drawing Showing Survey Points

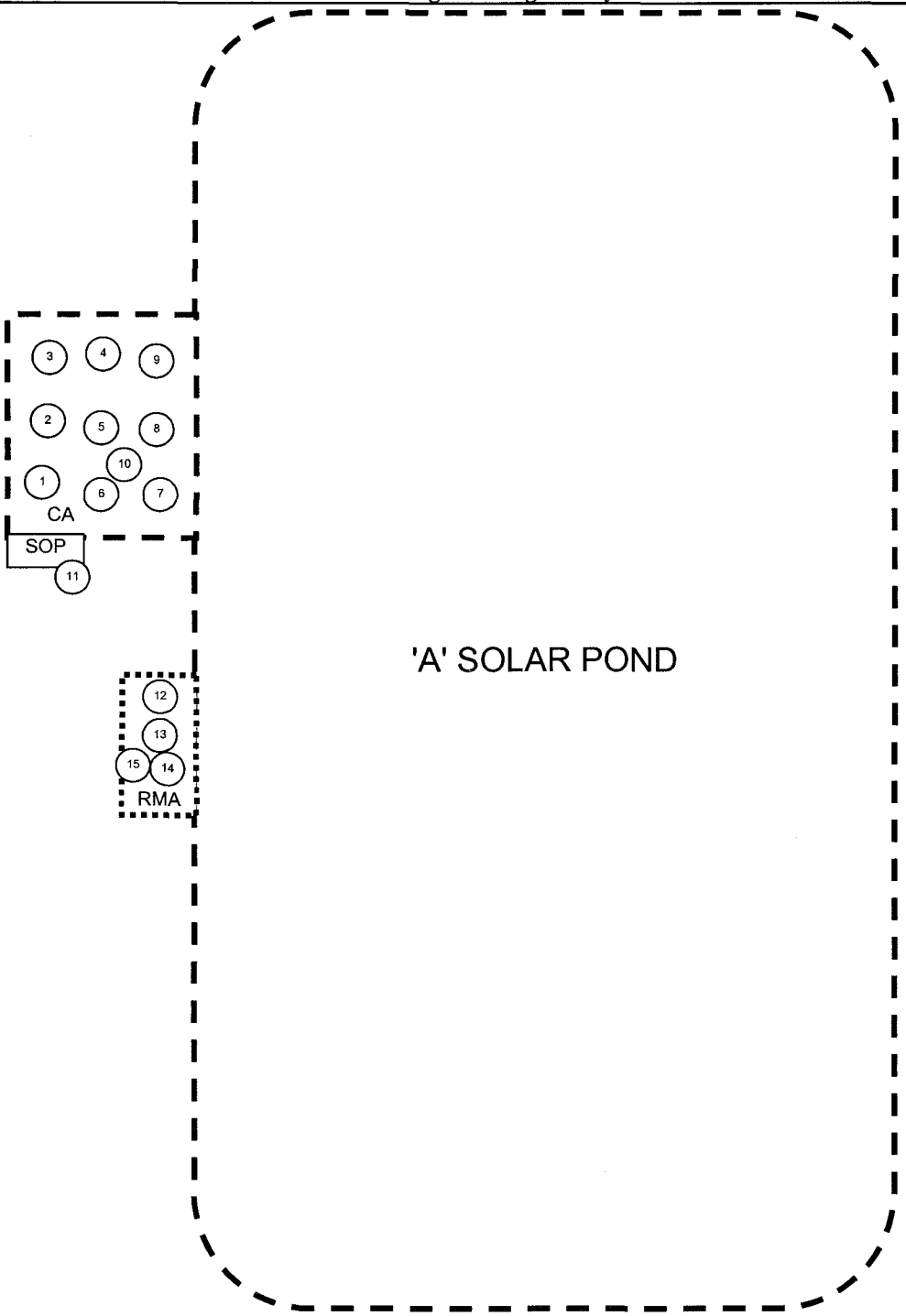

25

ROCKY FLATS ENVIRONMENTAL TECHNOLOGY SITE

INSTRUMENT DATA

Mfg.	Eberline	Mfg.	NE	Mfg.	NE
Model	SAC 4	Model	Electra	Model	Electra
Serial #	824	Serial #	1833	Serial #	NA
Cal Due	10/30/02	Cal Due	10/3/02	Cal Due	NA
Bkg	0.1 cpmα	Bkg	0 cpmα	Bkg	NA cpmα
Efficiency	33.00 %	Efficiency	23.30 %	Efficiency	NA %
MDA	20 dpmα	MDA	12 dpmα	MDA	###### dpmα

Mfg.	Eberline	Mfg.	NE	Mfg.	NE
Model	BC 4	Model	Electra	Model	Electra
Serial #	704	Serial #	1833	Serial #	NA
Cal Due	10/30/02	Cal Due	3/31/01	Cal Due	NA
Bkg	32.3 cpmb	Bkg	478 cpmβ	Bkg	NA cpmβ
Efficiency	25.00 %	Efficiency	31.70 %	Efficiency	NA %
MDA	200 dpmβ	MDA	329 dpmβ	MDA	###### dpmβ

Survey Type: Contamination- Radiation
Building: 788
Location: solar ponds
Purpose: Daily

RWP #: NA

Date: 8/22/02 Time: 14:30

[redacted]

RCT: NA / NA / NA
Print name Signature Emp. #

PRN/REN # : NA
Comments: NA

SURVEY RESULTS

Swipe #	Location / Description Results in DPM/100sq.cm	Removable		Total	
		Alpha	Beta	Alpha	Beta
1	Teeth	< 20	< 200	< 12	< 329
2	I/S bucket	< 20	< 200	< 12	< 329
3	I/S bucket	< 20	< 200	< 12	< 329
4	O/S bucket	< 20	< 200	< 12	< 329
5	O/S bucket	< 20	< 200	< 12	< 329
6	END OF SURVEY	NA	NA	NA	NA
7	NA	NA	NA	NA	NA
8	NA	NA	NA	NA	NA
9	NA	NA	NA	NA	NA
10	NA	NA	NA	NA	NA
11	NA	NA	NA	NA	NA
12	NA	NA	NA	NA	NA
13	NA	NA	NA	NA	NA
14	NA	NA	NA	NA	NA
15	NA	NA	NA	NA	NA
16	NA	NA	NA	NA	NA
17	NA	NA	NA	NA	NA
18	NA	NA	NA	NA	NA
19	NA	NA	NA	NA	NA
20	NA	NA	NA	NA	NA
21	NA	NA	NA	NA	NA
22	NA	NA	NA	NA	NA
23	NA	NA	NA	NA	NA
24	NA	NA	NA	NA	NA
25	NA	NA	NA	NA	NA

MAP

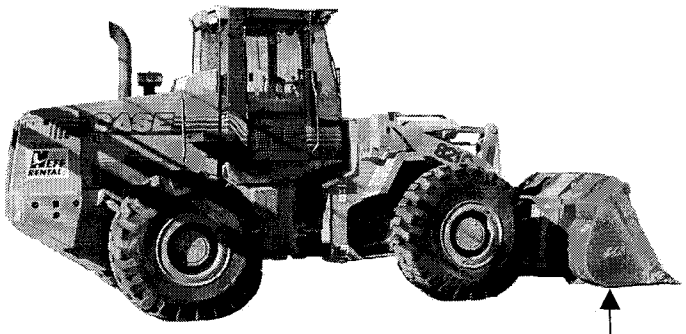

Date Reviewed: 8250L **RS Supervision:** [redacted]

26

ROCKY FLATS ENVIRONMENTAL TECHNOLOGY SITE

INSTRUMENT DATA

Mfg.	Eberline	Mfg.	NE	Mfg.	NE
Model	SAC 4	Model	Electra	Model	Electra
Serial #	824	Serial #	1429	Serial #	NA
Cal Due	10/30/02	Cal Due	2/14/03	Cal Due	NA
Bkg	0.1 cpmα	Bkg	5 cpmα	Bkg	NA cpmα
Efficiency	33.00 %	Efficiency	21.20 %	Efficiency	NA %
MDA	20 dpmα	MDA	62 dpmα	MDA	###### dpmα

Mfg.	Eberline	Mfg.	NE	Mfg.	NE
Model	BC 4	Model	Electra	Model	Electra
Serial #	704	Serial #	1429	Serial #	NA
Cal Due	10/30/02	Cal Due	3/31/01	Cal Due	NA
Bkg	32.3 cpmb	Bkg	632 cpmβ	Bkg	NA cpmβ
Efficiency	25.00 %	Efficiency	28.40 %	Efficiency	NA %
MDA	200 dpmβ	MDA	421 dpmβ	MDA	###### dpmβ

Survey Type: Contamination
Building: 788
Location: Solar ponds
Purpose: Daily

RWP #: NA

Date: 8/21/02 Time: 15:15

[redacted]

RCT: NA / NA / NA
Print name Signature Emp. #

PRN/REN # : NA
Comments:

SURVEY RESULTS

Swipe #	Location / Description Results in DPM/100sq.cm	Removable Alpha	Removable Beta	Total Alpha	Total Beta
1	BUCKET	< 20	< 200	< 62	< 421
2	BUCKET	< 20	< 200	< 62	< 421
3	BUCKET	< 20	< 200	< 62	< 421
4	BUCKET	< 20	< 200	< 62	< 421
5	BUCKET	< 20	< 200	< 62	< 421
6	NA	NA	NA	NA	NA
7	NA	NA	NA	NA	NA
8	NA	NA	NA	NA	NA
9	NA	NA	NA	NA	NA
10	NA	NA	NA	NA	NA
11	NA	NA	NA	NA	NA
12	NA	NA	NA	NA	NA
13	NA	NA	NA	NA	NA
14	NA	NA	NA	NA	NA
15	NA	NA	NA	NA	NA
16	NA	NA	NA	NA	NA
17	NA	NA	NA	NA	NA
18	NA	NA	NA	NA	NA
19	NA	NA	NA	NA	NA
20	NA	NA	NA	NA	NA
21	NA	NA	NA	NA	NA
22	NA	NA	NA	NA	NA
23	NA	NA	NA	NA	NA
24	NA	NA	NA	NA	NA
25	NA	NA	NA	NA	NA

MAP

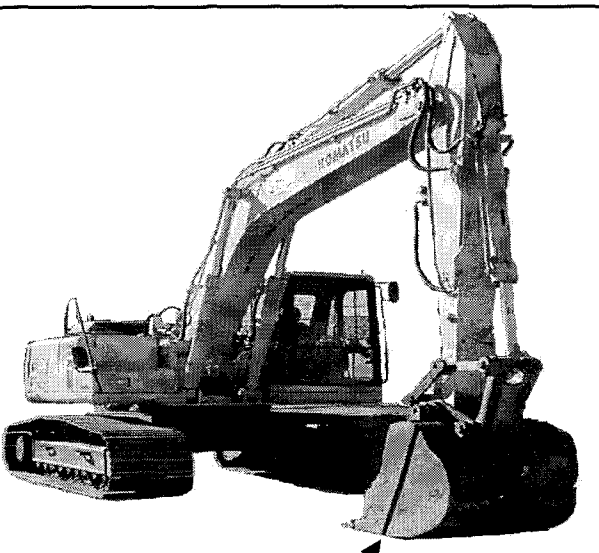

Date Reviewed: 8-30-02 **RS Supervision:** [redacted]

27

ROCKY FLATS ENVIRONMENTAL TECHNOLOGY SITE

INSTRUMENT DATA

Mfg.	Eberline	Mfg.	NE	Mfg.	NE
Model	SAC 4	Model	Electra	Model	Electra
Serial #	824	Serial #	1429	Serial #	NA
Cal Due	10/30/02	Cal Due	2/14/03	Cal Due	NA
Bkg	0.1 cpmα	Bkg	5 cpmα	Bkg	NA cpmα
Efficiency	33.00 %	Efficiency	21.20 %	Efficiency	NA %
MDA	20 dpmα	MDA	62 dpmα	MDA	###### dpmα

Mfg.	Eberline	Mfg.	NE	Mfg.	NE
Model	BC 4	Model	Electra	Model	Electra
Serial #	704	Serial #	1429	Serial #	NA
Cal Due	10/30/02	Cal Due	2/14/03	Cal Due	NA
Bkg	32.3 cpmb	Bkg	632 cpmβ	Bkg	NA cpmβ
Efficiency	25.00 %	Efficiency	28.40 %	Efficiency	NA %
MDA	200 dpmβ	MDA	421 dpmβ	MDA	###### dpmβ

Survey Type: Contamination- Radiation
Building: 788
Location: solar ponds
Purpose: Daily

RWP #: 02-Riss-020

Date: 8/21/02 Time: 15:15

[redacted]

PRN/REN # : NA
Comments: NA

SURVEY RESULTS

Swipe #	Location / Description Results in DPM/100sq.cm	Removable		Total	
		Alpha	Beta	Alpha	Beta
1	front bucket	< 20	< 200	<42	< 421
2	front bucket	< 20	< 200	<42	< 421
3	front bucket	< 20	< 200	<42	< 421
4	front bucket	< 20	< 200	<42	< 421
5	rear bucket	< 20	< 200	<42	< 421
6	rear bucket	< 20	< 200	<42	< 421
7	rear bucket	< 20	< 200	<42	< 421
8	rear bucket	< 20	< 200	<42	< 421
9	NA	NA	NA	NA	NA
10	NA	NA	NA	NA	NA
11	NA	NA	NA	NA	NA
12	NA	NA	NA	NA	NA
13	NA	NA	NA	NA	NA
14	NA	NA	NA	NA	NA
15	NA	NA	NA	NA	NA
16	NA	NA	NA	NA	NA
17	NA	NA	NA	NA	NA
18	NA	NA	NA	NA	NA
19	NA	NA	NA	NA	NA
20	NA	NA	NA	NA	NA
21	NA	NA	NA	NA	NA
22	NA	NA	NA	NA	NA
23	NA	NA	NA	NA	NA
24	NA	NA	NA	NA	NA
25	NA	NA	NA	NA	NA

MAP

Date Reviewed: 8/30/02 **RS Supervision:** [redacted]

Print Name Signature Emp. #

28

ROCKY FLATS ENVIRONMENTAL TECHNOLOGY SITE

INSTRUMENT DATA

Mfg.	Eberline	Mfg.	NE	Mfg.	NE
Model	SAC 4	Model	Electra	Model	Electra
Serial #	824	Serial #	1429	Serial #	NA
Cal Due	10/30/02	Cal Due	2/14/03	Cal Due	NA
Bkg	0.1 cpmα	Bkg	5 cpmα	Bkg	NA cpmα
Efficiency	33.00 %	Efficiency	21.20 %	Efficiency	NA %
MDA	20 dpmα	MDA	62 dpmα	MDA	###### dpmα

Mfg.	Eberline	Mfg.	NE	Mfg.	NE
Model	BC 4	Model	Electra	Model	Electra
Serial #	704	Serial #	1429	Serial #	NA
Cal Due	10/30/02	Cal Due	3/31/01	Cal Due	NA
Bkg	32.3 cpmb	Bkg	632 cpmβ	Bkg	NA cpmβ
Efficiency	25.00 %	Efficiency	28.40 %	Efficiency	NA %
MDA	200 dpmβ	MDA	421 dpmβ	MDA	###### dpmβ

Survey Type: Contamination- Radiation
Building: 788
Location: solar ponds
Purpose: Daily

RWP #: NA

Date: 8/21/02 Time: 15:15

[redacted]

RCT: NA / NA / NA
Print name / Signature / Emp. #

PRN/REN # : NA
Comments: NA

SURVEY RESULTS

Swipe #	Location / Description Results in DPM/100sq.cm	Removable Alpha	Removable Beta	Total Alpha	Total Beta
1	Teeth	< 20	< 200	< 42	< 421
2	I/S bucket	< 20	< 200	< 42	< 421
3	I/S bucket	< 20	< 200	< 42	< 421
4	O/S bucket	< 20	< 200	< 42	< 421
5	O/S bucket	< 20	< 200	< 42	< 421
6	END OF SURVEY	NA	NA	NA	NA
7	NA	NA	NA	NA	NA
8	NA	NA	NA	NA	NA
9	NA	NA	NA	NA	NA
10	NA	NA	NA	NA	NA
11	NA	NA	NA	NA	NA
12	NA	NA	NA	NA	NA
13	NA	NA	NA	NA	NA
14	NA	NA	NA	NA	NA
15	NA	NA	NA	NA	NA
16	NA	NA	NA	NA	NA
17	NA	NA	NA	NA	NA
18	NA	NA	NA	NA	NA
19	NA	NA	NA	NA	NA
20	NA	NA	NA	NA	NA
21	NA	NA	NA	NA	NA
22	NA	NA	NA	NA	NA
23	NA	NA	NA	NA	NA
24	NA	NA	NA	NA	NA
25	NA	NA	NA	NA	NA

MAP

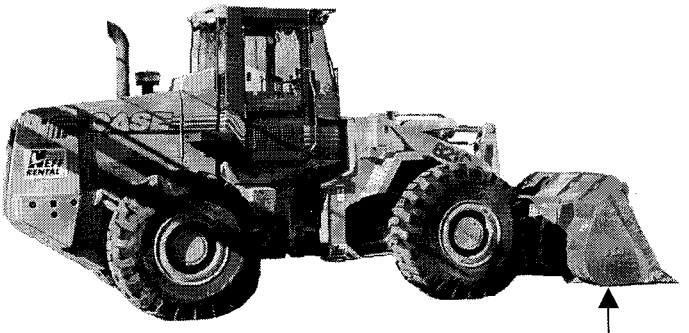

1-5

Date Reviewed: 8/22/02 **RS Supervision:** [redacted]
Print Name / Signature / Emp. #

ROCKY FLATS ENVIRONMENTAL TECHNOLOGY SITE

INSTRUMENT DATA

Mfg.	Ludlum	Mfg.	Ludlum	Mfg.	NE Electra
Model	2929	Model	2929	Model	DP-6
Serial #	147735	Serial #	176090	Serial #	3171
Cal Due	1/25/03	Cal Due	11/30/02	Cal Due	11/7/02
Bkg.	0.6 cpm α	Bkg.	0.6 cpm α	Bkg.	3 cpm α
Efficiency	35.3 %	Efficiency	34.8 %	Efficiency	23.7 %
MDA	18 dpm α	MDA	18 dpm α	MDA	45 dpm α

Mfg.	Ludlum	Mfg.	Ludlum	Mfg.	NE Electra
Model	2929	Model	2929	Model	DP-6
Serial #	147735	Serial #	176090	Serial #	3171
Cal Due	1/25/03	Cal Due	11/30/02	Cal Due	11/7/02
Bkg.	64.1 cpm β	Bkg.	84.4 cpm β	Bkg.	949 cpm β
Efficiency	39.8 %	Efficiency	39.5 %	Efficiency	32.9 %
MDA	205 dpm α	MDA	205 dpm α	MDA	444 dpm β

Survey type: Contamination
Building: Solar Ponds
Location: Valve Pit 1
Purpose: Job In-progress Survey

RWP #: 02-RISS-020

Date: 8/21/02 Time: 1300

[redacted]

RCT: NA / NA / NA
Print name Signature Emp. #

PRN/REN # : NA
Comments: Performed scan survey on pit walls from ground level down to approximately 3 feet below ground level. Performed swipe and 60 second PAT survey at locations shown on map. It is estimated that there is 1 foot of dirt still at bottom of pit.

SURVEY RESULTS

Swipe #	LOCATION/DESCRIPTION	ALPHA			BETA		
		Swipe	Direct	Wipe	Swipe	Direct	Wipe
		dpm/100cm2	dpm/100cm2	dpm/wipe	dpm/100cm2	dpm/100cm2	dpm/wipe
1	Wall	<18	60	NA	<205	1401	NA
2	Wall	<18	84		<205	2391	
3	Wall	<18	78		<205	2391	
4	Wall	<18	84		<205	2430	
5	Wall	<18	198		<205	2484	
6	Wall	<18	138		<205	1113	
7	Wall	<18	132		<205	2922	
8	Wall	<18	132		<205	1869	
9	Valve	<18	168		<205	4212	
10	Ground	NA	<45		NA	<444	
11	Ground		<45			<444	
12	Ground		<45			<444	
NA	NA		NA			NA	
NA	NA	NA	NA	NA	NA	NA	NA

Date Reviewed: 8-22-02 **RS Supervision:** [redacted]

VALVE PIT 1 BETWEEN 'A' & 'C' SOLAR PONDS

N

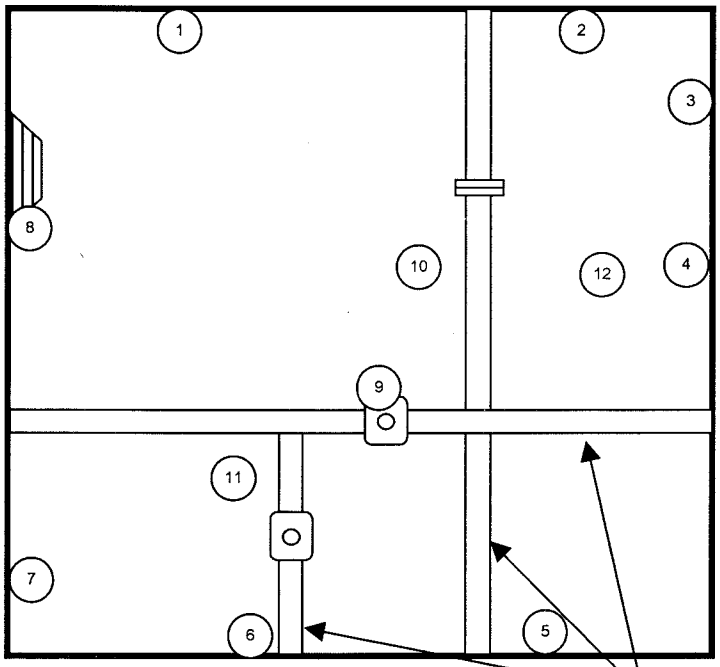

ROCKY FLATS ENVIRONMENTAL TECHNOLOGY SITE

INSTRUMENT DATA

Mfg.	Eberline	Mfg.	Eberline	Mfg.	NE Electra
Model	SAC-4	Model	BC-4	Model	DP-6
Serial #	842	Serial #	704	Serial #	1429
Cal Due	10/1/02	Cal Due	10/30/02	Cal Due	2/14/03
Bkg	0.1 cpmα	Bkg	32.3 cpmβ	Bkg	5 cpmα
Eff.	33 %	Eff.	25 %	Eff.	21.4 %
MDA	20 dpmα	MDA	200 dpmβ	MDA	61 dpmα

Mfg.	Eberline	Mfg.	Eberline	Mfg.	NE Electra
Model	SAC-4	Model	BC-4	Model	DP-6
Serial #	NA	Serial #	NA	Serial #	1429
Cal Due		Cal Due		Cal Due	2/14/03
Bkg	cpmα	Bkg	cpmβ	Bkg	632 cpmβ
Eff.	%	Eff.	%	Eff.	31 %
MDA	NA dpmα	MDA	NA dpmβ	MDA	386 dpmβ

Survey Type: Contamination
Building: 788
Location: pugh mill pad and surrounding concrete
Purpose: SCO

RWP #: 02-RISS-020

Date: 8/21/02 Time: 1300

[redacted]

RCT: NA / NA / NA
Print name / Signature / Emp. #

PRN/REN # : NA
Comments: SCO survey number

SURVEY RESULTS

Swipe	LOCATION	ALPHA Swipe	ALPHA Direct	ALPHA Wipe	BETA Swipe	BETA Direct	BETA Wipe
#	see map	dpm/100cm2	dpm/100cm2	dpm/wipe	dpm/100cm2	dpm/100cm2	dpm/wipe
1	concrete	0	65	NA	0	981	NA
2	concrete	0	177	NA	0	1168	NA
3	concrete	0	75	NA	0	1174	NA
4	concrete	0	103	NA	0	1000	NA
5	concrete	0	84	NA	0	1126	NA
6	concrete	0	103	NA	0	735	NA
7	concrete	0	28	NA	0	774	NA
8	concrete	0	150	NA	0	752	NA
9	concrete	0	89	NA	0	600	NA
10	concrete	0	75	NA	0	826	NA
11	concrete	0	150	NA	0	1406	NA
12	concrete	0	1107	NA	0	865	NA
13	concrete	0	131	NA	0	1471	NA
14	concrete	0	173	NA	0	1158	NA
15	concrete	0	1729	NA	0	2752	NA
16	concrete	0	5098	NA	0	4758	NA
17	concrete	0	3953	NA	0	5284	NA
18	concrete	0	542	NA	0	2197	NA
19	concrete	0	509	NA	0	1906	NA
20	concrete	0	519	NA	0	1848	NA

Date Reviewed: 8-26-02 **RS Supervision:** [redacted]

37

ROCKY FLATS ENVIRONMENTAL TECHNOLOGY SITE

Drawing Showing Survey Points

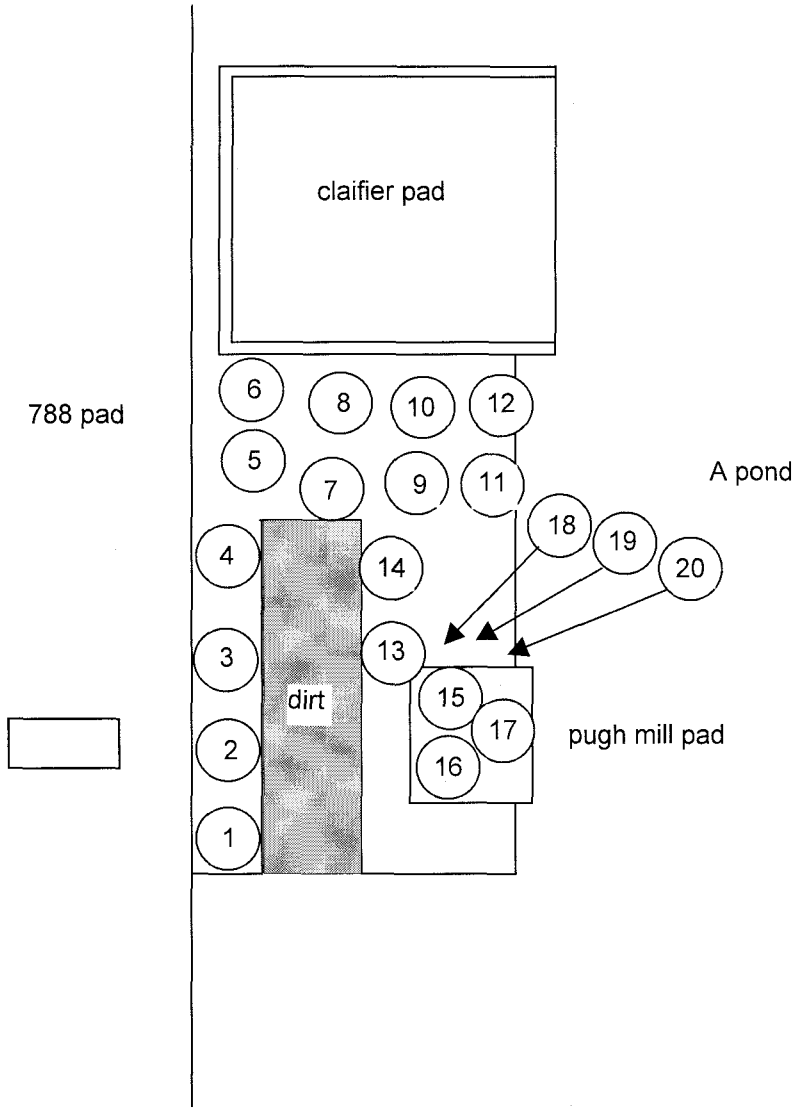

ROCKY FLATS ENVIRONMENTAL TECHNOLOGY SITE

INSTRUMENT DATA

Mfg.	Eberline	Mfg.	NE	Mfg.	NE
Model	SAC 4	Model	Electra	Model	Electra
Serial #	824	Serial #	1833	Serial #	NA
Cal Due	10/1/02	Cal Due	10/3/02	Cal Due	NA
Bkg	0 cpmα	Bkg	5 cpmα	Bkg	NA cpmα
Efficiency	33.00 %	Efficiency	23.30 %	Efficiency	NA %
MDA	20 dpmα	MDA	56 dpmα	MDA	###### dpmα

Mfg.	Eberline	Mfg.	NE	Mfg.	NE
Model	BC 4	Model	Electra	Model	Electra
Serial #	704	Serial #	1833	Serial #	NA
Cal Due	10/30/02	Cal Due	3/31/01	Cal Due	NA
Bkg	32.8 cpmb	Bkg	358 cpmβ	Bkg	NA cpmβ
Efficiency	25.00 %	Efficiency	31.70 %	Efficiency	NA %
MDA	200 dpmβ	MDA	286 dpmβ	MDA	###### dpmβ

Survey Type: Contamination- Radiation
Building: SOLAR PONDS
Location: CONNEX
Purpose: Daily

RWP #: 02 - RISS - 020

Date: 8/20/02 Time: 15:00

[redacted]

RCT: NA / NA / NA
Print name Signature Emp. #

PRN/REN # : NA
Comments:

SURVEY RESULTS

Swipe #	Location / Description Results in DPM/100sq.cm	Removable Alpha	Removable Beta	Total Alpha	Total Beta
1	FLOOR	<20	<200	< 56	< 286
2	FLOOR	<20	<200	< 56	< 286
3	FLOOR	<20	<200	< 56	< 286
4	FLOOR	<20	<200	< 56	< 286
5	FLOOR	<20	<200	< 56	< 286
6	FLOOR	<20	<200	< 56	< 286
7	SHELVES	<20	<200	< 56	< 286
8	SHELVES	<20	<200	< 56	< 286
9	SHELVES	<20	<200	< 56	< 286
10	SHELVES	<20	<200	< 56	< 286
11	RMA TRASH CAN	<20	<200	< 56	< 286
12	EQUIPMENT	<20	<200	< 56	< 286
13	EQUIPMENT	<20	<200	< 56	< 286
14	EQUIPMENT	<20	<200	< 56	< 286
15	EQUIPMENT	<20	<200	< 56	< 286
16	END OF SURVEY	NA	NA	NA	NA
17	NA	NA	NA	NA	NA
18	NA	NA	NA	NA	NA
19	NA	NA	NA	NA	NA
20	NA	NA	NA	NA	NA
21	NA	NA	NA	NA	NA
22	NA	NA	NA	NA	NA
23	NA	NA	NA	NA	NA
24	NA	NA	NA	NA	NA
25	NA	NA	NA	NA	NA

Map

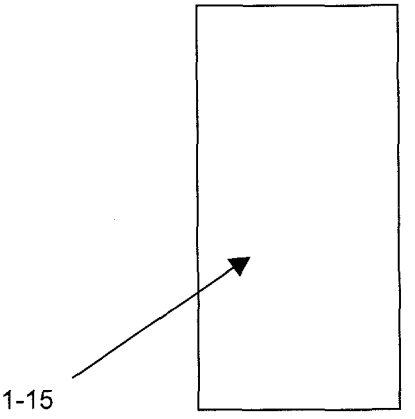

Date Reviewed: 8/20/02 **RS Supervision:** [redacted]

ROCKY FLATS ENVIRONMENTAL TECHNOLOGY SITE

INSTRUMENT DATA

Mfg.	Eberline	Mfg.	NE	Mfg.	NE
Model	SAC 4	Model	Electra	Model	Electra
Serial #	824	Serial #	1833	Serial #	NA
Cal Due	10/1/02	Cal Due	10/3/02	Cal Due	NA
Bkg	0 cpmα	Bkg	5 cpmα	Bkg	NA cpmα
Efficiency	33.00 %	Efficiency	23.30 %	Efficiency	NA %
MDA	20 dpmα	MDA	56 dpmα	MDA	###### dpmα

Mfg.	Eberline	Mfg.	NE	Mfg.	NE
Model	BC 4	Model	Electra	Model	Electra
Serial #	704	Serial #	1833	Serial #	NA
Cal Due	10/30/02	Cal Due	3/31/01	Cal Due	NA
Bkg	32.8 cpmb	Bkg	358 cpmβ	Bkg	NA cpmβ
Efficiency	25.00 %	Efficiency	31.70 %	Efficiency	NA %
MDA	200 dpmβ	MDA	286 dpmβ	MDA	###### dpmβ

Survey Type: Contamination- Radiation
Building: SOLAR PONDS
Location: General Area
Purpose: Daily

RWP #: 02 - RISS - 020

Date: 8/20/02 Time: 15:00

[redacted]

RCT: NA / NA / NA
Print name Signature Emp. #

PRN/REN # : NA
Comments:

SURVEY RESULTS

Swipe #	Location / Description Results in DPM/100sq.cm	Removable		Total	
		Alpha	Beta	Alpha	Beta
1	FINGER	< 20	< 200	< 56	< 286
2	FINGER	< 20	< 200	< 56	< 286
3	FINGER	< 20	< 200	< 56	< 286
4	FINGER	< 20	< 200	< 56	< 286
5	FINGER	< 20	< 200	< 56	< 286
6	END OF SURVEY	NA	NA	NA	NA
7	NA	NA	NA	NA	NA
8	NA	NA	NA	NA	NA
9	NA	NA	NA	NA	NA
10	NA	NA	NA	NA	NA
11	NA	NA	NA	NA	NA
12	NA	NA	NA	NA	NA
13	NA	NA	NA	NA	NA
14	NA	NA	NA	NA	NA
15	NA	NA	NA	NA	NA
16	NA	NA	NA	NA	NA
17	NA	NA	NA	NA	NA
18	NA	NA	NA	NA	NA
19	NA	NA	NA	NA	NA
20	NA	NA	NA	NA	NA
21	NA	NA	NA	NA	NA
22	NA	NA	NA	NA	NA
23	NA	NA	NA	NA	NA
24	NA	NA	NA	NA	NA
25	NA	NA	NA	NA	NA

MAP

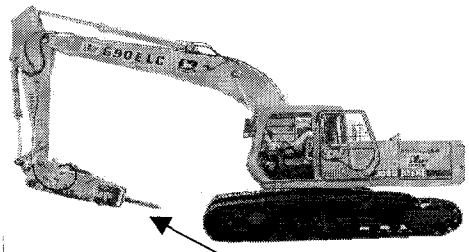

1-5

Date Reviewed: 8/20/02 **RS Supervision:** [redacted]

35

ROCKY FLATS ENVIRONMENTAL TECHNOLOGY SITE

INSTRUMENT DATA

Mfg.	Eberline	Mfg.	NE	Mfg.	NE
Model	SAC 4	Model	Electra	Model	Electra
Serial #	824	Serial #	1833	Serial #	NA
Cal Due	10/1/02	Cal Due	10/3/02	Cal Due	NA
Bkg	0 cpmα	Bkg	5 cpmα	Bkg	NA cpmα
Efficiency	33.00 %	Efficiency	23.30 %	Efficiency	NA %
MDA	20 dpmα	MDA	56 dpmα	MDA	###### dpmα

Mfg.	Eberline	Mfg.	NE	Mfg.	NE
Model	BC 4	Model	Electra	Model	Electra
Serial #	704	Serial #	1833	Serial #	NA
Cal Due	10/30/02	Cal Due	3/31/01	Cal Due	NA
Bkg	32.8 cpmb	Bkg	358 cpmβ	Bkg	NA cpmβ
Efficiency	25.00 %	Efficiency	31.70 %	Efficiency	NA %
MDA	200 dpmβ	MDA	286 dpmβ	MDA	###### dpmβ

Survey Type: Contamination- Radiation
Building: SOLAR PONDS
Location: General Area
Purpose: Daily

RWP #: 02 - RISS - 020

Date: 8/20/02 Time: 15:00

[redacted]

RCT: NA / NA / NA
Print name Signature Emp. #

PRN/REN # : NA
Comments: (2) TWO SAWS USED TODAY

SURVEY RESULTS

Swipe #	Location / Description Results in DPM/100sq.cm	Removable Alpha	Removable Beta	Total Alpha	Total Beta
1	#1 BLADE	<20	<200	< 56	< 286
2	#1 BLADE	<20	<200	< 56	< 286
3	#1 BLADE	<20	<200	< 56	< 286
4	#1 BLADE	<20	<200	< 56	< 286
5	#1 BLADE	<20	<200	< 56	< 286
6	#1 BODY	<20	<200	< 56	< 286
7	#1 BODY	<20	<200	< 56	< 286
8	#1 BODY	<20	<200	< 56	< 286
9	#1 BODY	<20	<200	< 56	< 286
10	#1 BODY	<20	<200	< 56	< 286
11	#1 BODY	<20	<200	< 56	< 286
12	#2 BLADE	<20	<200	< 56	< 286
13	#2 BLADE	<20	<200	< 56	< 286
14	#2 BLADE	<20	<200	< 56	< 286
15	#2 BLADE	<20	<200	< 56	< 286
16	#2 BLADE	<20	<200	< 56	< 286
17	2 # BODY	<20	<200	< 56	< 286
18	2 # BODY	<20	<200	< 56	< 286
19	2 # BODY	<20	<200	< 56	< 286
20	2 # BODY	<20	<200	< 56	< 286
21	2 # BODY	<20	<200	< 56	< 286
22	2 # BODY	<20	<200	< 56	< 286
23	NA	NA	NA	NA	NA
24	NA	NA	NA	NA	NA
25	NA	NA	NA	NA	NA

Map

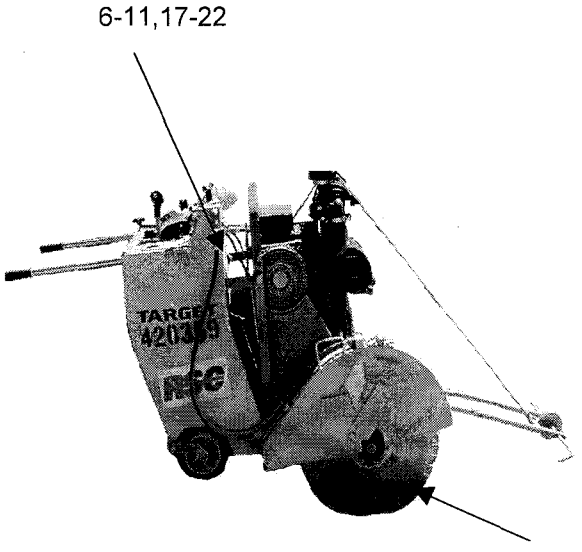

Date Reviewed: 8/20/02 **RS Supervision:** [redacted]

ROCKY FLATS ENVIRONMENTAL TECHNOLOGY SITE

INSTRUMENT DATA

Mfg.	Eberline	Mfg.	NE	Mfg.	NE
Model	SAC 4	Model	Electra	Model	Electra
Serial #	824	Serial #	1833	Serial #	NA
Cal Due	10/1/02	Cal Due	10/3/02	Cal Due	NA
Bkg	0 cpmα	Bkg	5 cpmα	Bkg	NA cpmα
Efficiency	33.00 %	Efficiency	23.30 %	Efficiency	NA %
MDA	20 dpmα	MDA	56 dpmα	MDA	###### dpmα

Mfg.	Eberline	Mfg.	NE	Mfg.	NE
Model	BC 4	Model	Electra	Model	Electra
Serial #	704	Serial #	1833	Serial #	NA
Cal Due	10/30/02	Cal Due	3/31/01	Cal Due	NA
Bkg	32.8 cpmb	Bkg	358 cpmβ	Bkg	NA cpmβ
Efficiency	25.00 %	Efficiency	31.70 %	Efficiency	NA %
MDA	200 dpmβ	MDA	286 dpmβ	MDA	###### dpmβ

Survey Type: Contamination- Radiation
Building: SOLAR PONDS
Location: General Area
Purpose: Daily

RWP #: 02 - RISS - 020

Date: 8/20/02 Time: 15:00

RC [redacted]

RCT: NA / NA / NA
Print name / Signature / Emp. #

PRN/REN # : NA
Comments: Excavator 325B

SURVEY RESULTS

Swipe #	Location / Description Results in DPM/100sq.cm	Removable Alpha	Removable Beta	Total Alpha	Total Beta
1	BUCKET	< 20	< 200	< 56	< 286
2	BUCKET	< 20	< 200	< 56	< 286
3	BUCKET	< 20	< 200	< 56	< 286
4	BUCKET	< 20	< 200	< 56	< 286
5	BUCKET	< 20	< 200	< 56	< 286
6	NA	NA	NA	NA	NA
7	NA	NA	NA	NA	NA
8	NA	NA	NA	NA	NA
9	NA	NA	NA	NA	NA
10	NA	NA	NA	NA	NA
11	NA	NA	NA	NA	NA
12	NA	NA	NA	NA	NA
13	NA	NA	NA	NA	NA
14	NA	NA	NA	NA	NA
15	NA	NA	NA	NA	NA
16	NA	NA	NA	NA	NA
17	NA	NA	NA	NA	NA
18	NA	NA	NA	NA	NA
19	NA	NA	NA	NA	NA
20	NA	NA	NA	NA	NA
21	NA	NA	NA	NA	NA
22	NA	NA	NA	NA	NA
23	NA	NA	NA	NA	NA
24	NA	NA	NA	NA	NA
25	NA	NA	NA	NA	NA

MAP

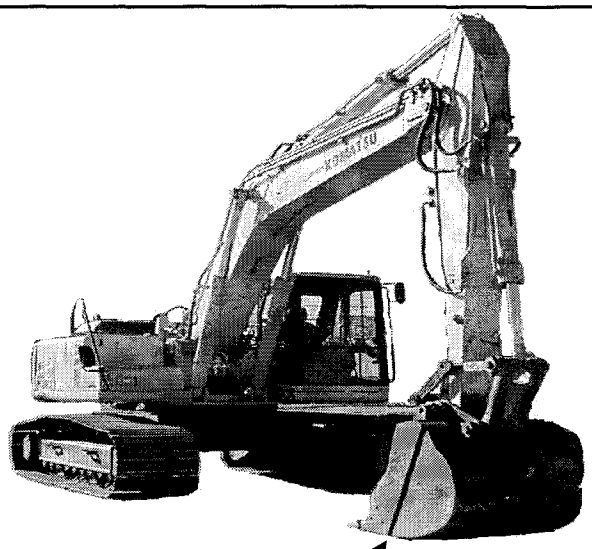

Date Reviewed: 8/20/02 **RS Supervision:** [redacted]
Print Name / Signature / Emp. #

37

ROCKY FLATS ENVIRONMENTAL TECHNOLOGY SITE

INSTRUMENT DATA

Mfg.	Eberline	Mfg.	NE	Mfg.	NE
Model	SAC 4	Model	Electra	Model	Electra
Serial #	824	Serial #	1833	Serial #	NA
Cal Due	10/1/02	Cal Due	10/3/02	Cal Due	NA
Bkg	0 cpmα	Bkg	5 cpmα	Bkg	NA cpmα
Efficiency	33.00 %	Efficiency	23.30 %	Efficiency	NA %
MDA	20 dpmα	MDA	56 dpmα	MDA	###### dpmα

Mfg.	Eberline	Mfg.	NE	Mfg.	NE
Model	BC 4	Model	Electra	Model	Electra
Serial #	704	Serial #	1833	Serial #	NA
Cal Due	10/30/02	Cal Due	3/31/01	Cal Due	NA
Bkg	32.8 cpmb	Bkg	358 cpmβ	Bkg	NA cpmβ
Efficiency	25.00 %	Efficiency	31.70 %	Efficiency	NA %
MDA	200 dpmβ	MDA	286 dpmβ	MDA	###### dpmβ

Survey Type: Contamination- Radiation
Building: SOLAR PONDS
Location: General Area
Purpose: Daily

RWP #: 02 - RISS - 020

Date: 8/20/02 Time: 15:00

[redacted]

RCT: NA / NA / NA
Print name Signature Emp. #

PRN/REN # : NA
Comments:

SURVEY RESULTS

Swipe #	Location / Description Results in DPM/100sq.cm	Removable Alpha	Removable Beta	Total Alpha	Total Beta
1	Teeth	< 20	< 200	< 56	< 286
2	I/S bucket	< 20	< 200	< 56	< 286
3	I/S bucket	< 20	< 200	< 56	< 286
4	O/S bucket	< 20	< 200	< 56	< 286
5	O/S bucket	< 20	< 200	< 56	< 286
6	END OF SURVEY	NA	NA	NA	NA
7	NA	NA	NA	NA	NA
8	NA	NA	NA	NA	NA
9	NA	NA	NA	NA	NA
10	NA	NA	NA	NA	NA
11	NA	NA	NA	NA	NA
12	NA	NA	NA	NA	NA
13	NA	NA	NA	NA	NA
14	NA	NA	NA	NA	NA
15	NA	NA	NA	NA	NA
16	NA	NA	NA	NA	NA
17	NA	NA	NA	NA	NA
18	NA	NA	NA	NA	NA
19	NA	NA	NA	NA	NA
20	NA	NA	NA	NA	NA
21	NA	NA	NA	NA	NA
22	NA	NA	NA	NA	NA
23	NA	NA	NA	NA	NA
24	NA	NA	NA	NA	NA
25	NA	NA	NA	NA	NA

MAP

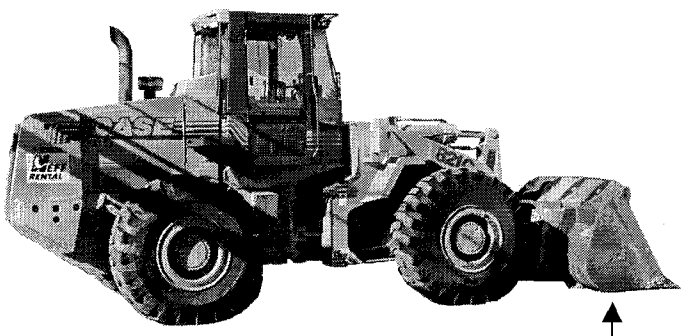

1-5

Date Reviewed: 8/20/02 **RS Supervision:** [redacted]
Print Name Signature Emp. #

ROCKY FLATS ENVIRONMENTAL TECHNOLOGY SITE

INSTRUMENT DATA

Mfg.	Eberline	Mfg.	NE	Mfg.	NE
Model	SAC 4	Model	Electra	Model	Electra
Serial #	824	Serial #	1833	Serial #	NA
Cal Due	10/30/02	Cal Due	10/3/02	Cal Due	NA
Bkg	0.2 cpmα	Bkg	5 cpmα	Bkg	NA cpmα
Efficiency	33.00 %	Efficiency	23.30 %	Efficiency	NA %
MDA	20 dpmα	MDA	56 dpmα	MDA	###### dpmα

Mfg.	Eberline	Mfg.	NE	Mfg.	NE
Model	BC 4	Model	Electra	Model	Electra
Serial #	704	Serial #	1833	Serial #	NA
Cal Due	10/30/02	Cal Due	3/31/01	Cal Due	NA
Bkg	32.4 cpmb	Bkg	327 cpmβ	Bkg	NA cpmβ
Efficiency	25.00 %	Efficiency	31.70 %	Efficiency	NA %
MDA	200 dpmβ	MDA	274 dpmβ	MDA	###### dpmβ

Survey Type: Contamination- Radiation
Building: Solar Ponds
Location: Between A and B Pads
Purpose: Daily

RWP #: 02-Riss-020

Date: 8/19/02 Time: 15:00

[redacted]

RCT:	NA	NA	NA
	Print name	Signature	Emp. #

PRN/REN # : NA
Comments: NA

SURVEY RESULTS

Swipe #	Location / Description Results in DPM/100sq.cm	Removable		Total	
		Alpha	Beta	Alpha	Beta
1	BUCKET	< 20	< 200	< 52	< 364
2	BUCKET	< 20	< 200	< 52	< 364
3	BUCKET	< 20	< 200	< 52	< 364
4	BUCKET	< 20	< 200	< 52	< 364
5	TRACKS	< 20	< 200	< 52	< 364
6	TRACKS	< 20	< 200	< 52	< 364
7	TRACKS	< 20	< 200	< 52	< 364
8	TRACKS	< 20	< 200	< 52	< 364
9	CAB	< 20	< 200	< 52	< 364
10	CAB	< 20	< 200	< 52	< 364
11	NA	NA	NA	NA	NA
12	NA	NA	NA	NA	NA
13	NA	NA	NA	NA	NA
14	NA	NA	NA	NA	NA
15	NA	NA	NA	NA	NA
16	NA	NA	NA	NA	NA
17	NA	NA	NA	NA	NA
18	NA	NA	NA	NA	NA
19	NA	NA	NA	NA	NA
20	NA	NA	NA	NA	NA
21	NA	NA	NA	NA	NA
22	NA	NA	NA	NA	NA
23	NA	NA	NA	NA	NA
24	NA	NA	NA	NA	NA
25	NA	NA	NA	NA	NA

MAP

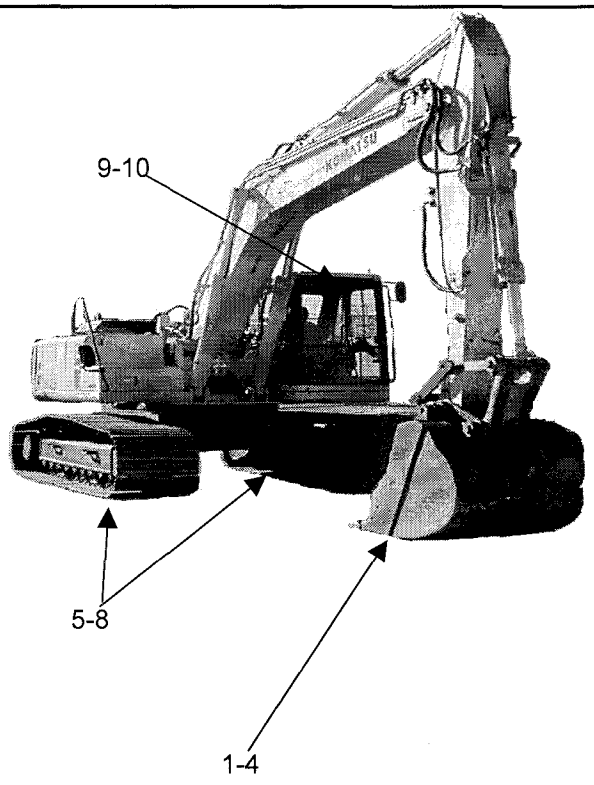

Date Reviewed: 8/20/02 **RS Supervision:** [redacted]

Print Name Signature Emp. #

39

ROCKY FLATS ENVIRONMENTAL TECHNOLOGY SITE

INSTRUMENT DATA

	Eberline	Mfg.	NE	Mfg.	NE
Model	SAC 4	Model	Electra	Model	Electra
Serial #	824	Serial #	1260	Serial #	NA
Cal Due	10/30/02	Cal Due	08/27/02	Cal Due	NA
Bkg	0.5 cpmα	Bkg	1 cpmα	Bkg	NA cpmα
Efficiency	33.00 %	Efficiency	21.20 %	Efficiency	NA %
MDA	20 dpmα	MDA	35 dpmα	MDA	###### dpmα
Mfg.	Eberline	Mfg.	NE	Mfg.	NE
Model	BC 4	Model	Electra	Model	Electra
Serial #	704	Serial #	1260	Serial #	NA
Cal Due	10/30/02	Cal Due	08/27/02	Cal Due	NA
Bkg	35.2 cpmβ	Bkg	287 cpmβ	Bkg	NA cpmβ
Efficiency	25.00 %	Efficiency	28.40 %	Efficiency	NA %
MDA	200 dpmβ	MDA	287 dpmβ	MDA	###### dpmβ

Survey Type: Contamination
Building: Solar Ponds
Location: Solar Ponds
Purpose: End of Shift Survey

RWP #: 02-Riss-020

Date: 8/19/02 Time: 15:00

[redacted]

RCT: NA / NA / NA
Print name Signature Emp. #

PRN/REN # : NA
Comments: NA

SURVEY RESULTS

Swipe #	Location / Description Results in DPM/100sq.cm	Removable Alpha	Removable Beta	Total Alpha	Total Beta
1	Teeth	< 20	< 200	< 52	< 364
2	I/S bucket	< 20	< 200	< 52	< 364
3	I/S bucket	< 20	< 200	< 52	< 364
4	O/S bucket	< 20	< 200	< 52	< 364
5	O/S bucket	< 20	< 200	< 52	< 364
6	END OF SURVEY	NA	NA	NA	NA
7	NA	NA	NA	NA	NA
8	NA	NA	NA	NA	NA
9	NA	NA	NA	NA	NA
10	NA	NA	NA	NA	NA
11	NA	NA	NA	NA	NA
12	NA	NA	NA	NA	NA
13	NA	NA	NA	NA	NA
14	NA	NA	NA	NA	NA
15	NA	NA	NA	NA	NA
16	NA	NA	NA	NA	NA
17	NA	NA	NA	NA	NA
18	NA	NA	NA	NA	NA
19	NA	NA	NA	NA	NA
20	NA	NA	NA	NA	NA
21	NA	NA	NA	NA	NA
22	NA	NA	NA	NA	NA
23	NA	NA	NA	NA	NA
24	NA	NA	NA	NA	NA
25	NA	NA	NA	NA	NA

MAP

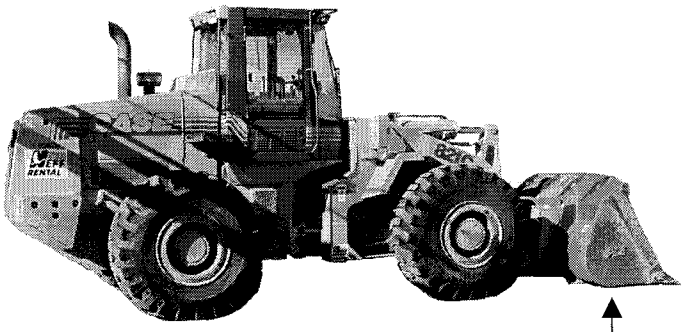

1-5

Date Reviewed: 8/20/02 **RS Supervision:** [redacted]

ROCKY FLATS ENVIRONMENTAL TECHNOLOGY SITE

INSTRUMENT DATA

Mfg.	Eberline	Mfg.	NE	Mfg.	NE
Model	SAC 4	Model	Electra	Model	Electra
Serial #	824	Serial #	1833	Serial #	NA
Cal Due	10/30/02	Cal Due	10/3/02	Cal Due	NA
Bkg	0.2 cpmα	Bkg	5 cpmα	Bkg	NA cpmα
Efficiency	33.00 %	Efficiency	23.30 %	Efficiency	NA %
MDA	20 dpmα	MDA	56 dpmα	MDA	###### dpmα

Mfg.	Eberline	Mfg.	NE	Mfg.	NE
Model	BC 4	Model	Electra	Model	Electra
Serial #	704	Serial #	1833	Serial #	NA
Cal Due	10/30/02	Cal Due	10/3/02	Cal Due	NA
Bkg	32.4 cpmb	Bkg	327 cpmβ	Bkg	NA cpmβ
Efficiency	25.00 %	Efficiency	31.70 %	Efficiency	NA %
MDA	200 dpmβ	MDA	274 dpmβ	MDA	###### dpmβ

Survey Type: Contamination- Radiation
Building: Solar Ponds
Location: Routine
Purpose: Daily
RWP #: 02-Riss-020
Date: 8/19/02 Time: 15:00

[redacted]

RCT: NA / NA / NA
Print name Signature Emp. #

PRN/REN # : NA
Comments:

SURVEY RESULTS

Swipe #	Location / Description Results in DPM/100sq.cm	Removable		Total	
		Alpha	Beta	Alpha	Beta
1	FOLK	<20	<200	< 52	< 364
2	FOLK	<20	<200	< 52	< 364
3	FOLK	<20	<200	< 52	< 364
4	FOLK	<20	<200	< 52	< 364
5	FOLK	<20	<200	< 52	< 364
6	NA	NA	NA	NA	NA
7	NA	NA	NA	NA	NA
8	NA	NA	NA	NA	NA
9	NA	NA	NA	NA	NA
10	NA	NA	NA	NA	NA
11	NA	NA	NA	NA	NA
12	NA	NA	NA	NA	NA
13	NA	NA	NA	NA	NA
14	NA	NA	NA	NA	NA
15	NA	NA	NA	NA	NA
16	NA	NA	NA	NA	NA
17	NA	NA	NA	NA	NA
18	NA	NA	NA	NA	NA
19	NA	NA	NA	NA	NA
20	NA	NA	NA	NA	NA
21	NA	NA	NA	NA	NA
22	NA	NA	NA	NA	NA
23	NA	NA	NA	NA	NA
24	NA	NA	NA	NA	NA
25	NA	NA	NA	NA	NA

MAP

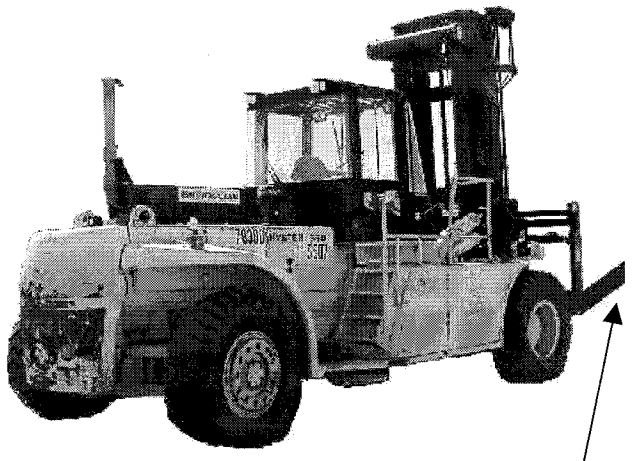

1-5

Date Reviewed: 8/20/02 **RS Supervision:** [redacted]

41

ROCKY FLATS ENVIRONMENTAL TECHNOLOGY SITE

INSTRUMENT DATA

Mfg.	Eberline	Mfg.	NE	Mfg.	NE
Model	SAC 4	Model	Electra	Model	Electra
Serial #	824	Serial #	1833	Serial #	NA
Cal Due	10/30/02	Cal Due	10/03/02	Cal Due	NA
Bkg	0.2 cpmα	Bkg	5 cpmα	Bkg	NA cpmα
Efficiency	33.00 %	Efficiency	23.30 %	Efficiency	NA %
MDA	20 dpmα	MDA	56 dpmα	MDA	###### dpmα

Mfg.	Eberline	Mfg.	NE	Mfg.	NE
Model	BC 4	Model	Electra	Model	Electra
Serial #	704	Serial #	1833	Serial #	NA
Cal Due	10/30/02	Cal Due	10/03/02	Cal Due	NA
Bkg	32.4 cpmβ	Bkg	327 cpmβ	Bkg	NA cpmβ
Efficiency	25.00 %	Efficiency	31.70 %	Efficiency	NA %
MDA	200 dpmβ	MDA	274 dpmβ	MDA	###### dpmβ

Survey Type: Contaminaton
Building: Solar Ponds
Location: Solar Ponds
Purpose: Daily

RWP #: 02-RISS-020

Date: 8/19/02 Time: 15:00

[redacted]

RCT:	NA	NA	NA
	Print name	Signature	Emp. #

PRN/REN # : NA
Comments: NA

SURVEY RESULTS

Swipe #	Location / Description Results in DPM/100sq.cm	Removable		Total	
		Alpha	Beta	Alpha	Beta
1	blade	< 20	< 200	< 52	< 364
2	blade	< 20	< 200	< 52	< 364
3	blade	< 20	< 200	< 52	< 364
4	blade	< 20	< 200	< 52	< 364
5	blade	< 20	< 200	< 52	< 364
6	body	< 20	< 200	< 52	< 364
7	body	< 20	< 200	< 52	< 364
8	body	< 20	< 200	< 52	< 364
9	body	< 20	< 200	< 52	< 364
10	body	< 20	< 200	< 52	< 364
11	END OF SURVEY	NA	NA	NA	NA
12	NA	NA	NA	NA	NA
13	NA	NA	NA	NA	NA
14	NA	NA	NA	NA	NA
15	NA	NA	NA	NA	NA
16	NA	NA	NA	NA	NA
17	NA	NA	NA	NA	NA
18	NA	NA	NA	NA	NA
19	NA	NA	NA	NA	NA
20	NA	NA	NA	NA	NA
21	NA	NA	NA	NA	NA
22	NA	NA	NA	NA	NA
23	NA	NA	NA	NA	NA
24	NA	NA	NA	NA	NA
25	NA	NA	NA	NA	NA

MAP

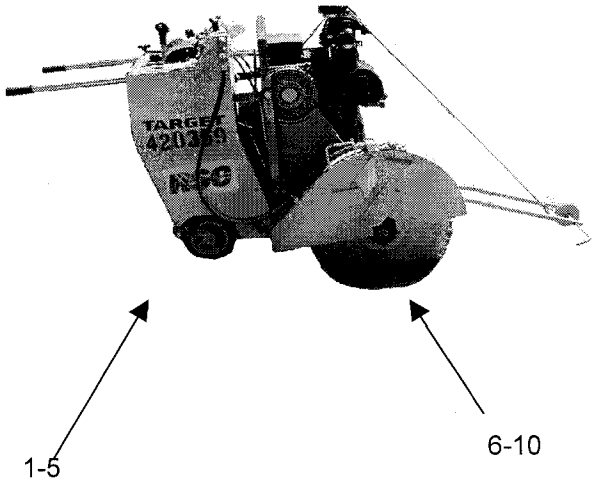

Date Reviewed: 82802 **RS Supervision:** [redacted]

ROCKY FLATS ENVIRONMENTAL TECHNOLOGY SITE

INSTRUMENT DATA

Mfg.	Eberline	Mfg.	NE	Mfg.	NE
Model	SAC 4	Model	Electra	Model	Electra
Serial #	824	Serial #	1833	Serial #	NA
Cal Due	10/30/02	Cal Due	10/3/02	Cal Due	NA
Bkg	0.2 cpmα	Bkg	5 cpmα	Bkg	NA cpmα
Efficiency	33.00 %	Efficiency	23.30 %	Efficiency	NA %
MDA	20 dpmα	MDA	56 dpmα	MDA	###### dpmα

Mfg.	Eberline	Mfg.	NE	Mfg.	NE
Model	BC 4	Model	Electra	Model	Electra
Serial #	704	Serial #	1833	Serial #	NA
Cal Due	10/30/02	Cal Due	10/3/02	Cal Due	NA
Bkg	32.4 cpmb	Bkg	327 cpmβ	Bkg	NA cpmβ
Efficiency	25.00 %	Efficiency	31.70 %	Efficiency	NA %
MDA	200 dpmβ	MDA	274 dpmβ	MDA	###### dpmβ

Survey Type: Contamination- Radiation
Building: Solar Ponds
Location: Routine
Purpose: Daily
RWP #: 02-Riss-020
Date: 8/19/02 Time: 15:00

[redacted]

RCT: NA / NA / NA
Print name Signature Emp. #

PRN/REN # : NA
Comments: NA

SURVEY RESULTS

Swipe #	Location / Description Results in DPM/100sq.cm	Removable Alpha	Removable Beta	Total Alpha	Total Beta
1	BUCKET	<20	<200	< 52	< 364
2	BUCKET	<20	<200	< 52	< 364
3	BUCKET	<20	<200	< 52	< 364
4	BUCKET	<20	<200	< 52	< 364
5	BUCKET	<20	<200	< 52	< 364
6	FRONT LOADER	<20	<200	< 52	< 364
7	FRONT LOADER	<20	<200	< 52	< 364
8	FRONT LOADER	<20	< 200	< 52	< 364
9	FRONT LOADER	<20	< 200	< 52	< 364
10	FRONT LOADER	<20	< 200	< 52	< 364
11	NA	NA	NA	NA	NA
12	NA	NA	NA	NA	NA
13	NA	NA	NA	NA	NA
14	NA	NA	NA	NA	NA
15	NA	NA	NA	NA	NA
16	NA	NA	NA	NA	NA
17	NA	NA	NA	NA	NA
18	NA	NA	NA	NA	NA
19	NA	NA	NA	NA	NA
20	NA	NA	NA	NA	NA
21	NA	NA	NA	NA	NA
22	NA	NA	NA	NA	NA
23	NA	NA	NA	NA	NA
24	NA	NA	NA	NA	NA
25	NA	NA	NA	NA	NA

MAP

Date Reviewed: 8/26/02 **RS Supervision:** [redacted]

ROCKY FLATS ENVIRONMENTAL TECHNOLOGY SITE

INSTRUMENT DATA

Mfg.	Eberline	Mfg.	NE	Mfg.	NE
Model	SAC 4	Model	Electra	Model	Electra
Serial #	824	Serial #	1833	Serial #	NA
Cal Due	10/30/02	Cal Due	10/3/02	Cal Due	NA
Bkg	0.2 cpmα	Bkg	5 cpmα	Bkg	NA cpmα
Efficiency	33.00 %	Efficiency	23.30 %	Efficiency	NA %
MDA	20 dpmα	MDA	56 dpmα	MDA	###### dpmα

Mfg.	Eberline	Mfg.	NE	Mfg.	NE
Model	BC 4	Model	Electra	Model	Electra
Serial #	704	Serial #	1833	Serial #	NA
Cal Due	10/30/02	Cal Due	10/3/02	Cal Due	NA
Bkg	32.4 cpmb	Bkg	327 cpmβ	Bkg	NA cpmβ
Efficiency	25.00 %	Efficiency	31.70 %	Efficiency	NA %
MDA	200 dpmβ	MDA	274 dpmβ	MDA	###### dpmβ

Survey Type: Contamination- Radiation
Building: Solar Ponds
Location: Routine
Purpose: Daily

RWP #: 02-Riss-020

Date: 8/19/02 Time: 15:00

RCT: NA / NA / NA

Print name	Signature	Emp. #
[redacted]		

PRN/REN # : NA
Comments: NA

SURVEY RESULTS

Swipe #	Location / Description Results in DPM/100sq.cm	Removable Alpha	Removable Beta	Total Alpha	Total Beta
1	Connex table	< 20	< 200	< 52	< 364
2	Connex table	< 20	< 200	< 52	< 364
3	Connex table	< 20	< 200	< 52	< 364
4	Connex table	< 20	< 200	< 52	< 364
5	Trash barrel, PPE barrel	< 20	< 200	< 52	< 364
6	Trash barrel, PPE barrel	< 20	< 200	< 52	< 364
7	Trash barrel, PPE barrel	< 20	< 200	< 52	< 364
8	Trash barrel, PPE barrel	< 20	< 200	< 52	< 364
9	Floor	< 20	< 200	< 52	< 364
10	Floor	< 20	< 200	< 52	< 364
11	Floor	< 20	< 200	< 52	< 364
12	Floor	< 20	< 200	< 52	< 364
13	Shelf	< 20	< 200	< 52	< 364
14	Shelf	< 20	< 200	< 52	< 364
15	Shelf	< 20	< 200	< 52	< 364
16	Shelf	< 20	< 200	< 52	< 364
17	NA	NA	NA	NA	NA
18	NA	NA	NA	NA	NA
19	NA	NA	NA	NA	NA
20	NA	NA	NA	NA	NA
21	NA	NA	NA	NA	NA
22	NA	NA	NA	NA	NA
23	NA	NA	NA	NA	NA
24	NA	NA	NA	NA	NA
25	NA	NA	NA	NA	NA

MAP

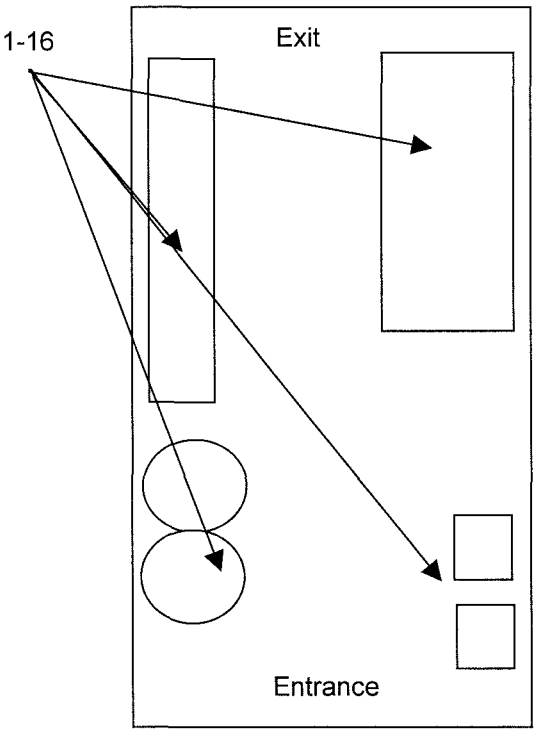

Date Reviewed: 8/20/02 **RS Supervision:** Steve Gernatt / [redacted]
Print Name Signature

44

ROCKY FLATS ENVIRONMENTAL TECHNOLOGY SITE

INSTRUMENT DATA

Mfg.	Eberline	Mfg.	Eberline	Mfg.	NE Electra
Model	SAC-4	Model	BC-4	Model	DP-6
Serial #	824	Serial #	NA	Serial #	1833
Cal Due	10/1/02	Cal Due		Cal Due	10/3/02
Bkg	0.2 cpmα	Bkg	cpmβ	Bkg	4 cpmα
Eff.	33 %	Eff.	%	Eff.	23.3 %
MDA	20 dpmα	MDA	NA dpmβ	MDA	52 dpmα

Mfg.	Eberline	Mfg.	Eberline	Mfg.	NE Electra
Model	BC-4	Model	BC-4	Model	DP-6
Serial #	704	Serial #	NA	Serial #	1833
Cal Due	10/30/02	Cal Due		Cal Due	10/3/02
Bkg	32.0 cpmβ	Bkg	cpmβ	Bkg	588 cpmβ
Eff.	25 %	Eff.	%	Eff.	31.7 %
MDA	200 dpmβ	MDA	NA dpmβ	MDA	364 dpmβ

Survey Type: Contamination

Building: 788 Solar Ponds

Location: Northwest slab

Purpose: SCO survey

RWP #: 02-RISS-020

Date: 8/16/02 Time: 1500

[redacted]

RCT: NA / NA / NA

Print name Signature Emp. #

PRN/REN # : NA

Comments: This survey was performed on the painted concrete surface were the concrete mixer use to sit on the north west corner of the 788 slab. The slab will go as low level waste because it is painted.
SCO survey #

SURVEY RESULTS

		ALPHA			BETA		
Swipe #	LOCATION	Swipe dpm/100cm2	Direct dpm/100cm2	Wipe dpm/wipe	Swipe dpm/100cm2	Direct dpm/100cm2	Wipe dpm/wipe
1	concrete	0	0	NA	16	479	NA
2	concrete	0	17	NA	24	467	NA
3	concrete	0	17	NA	0	0	NA
4	concrete	8	120	NA	0	423	NA
5	concrete	0	0	NA	0	164	NA
6	concrete	0	0	NA	0	274	NA
7	concrete	8	0	NA	16	341	NA
8	concrete	8	86	NA	24	426	NA
9	concrete	12	52	NA	0	372	NA
10	concrete	8	69	NA	0	391	NA
11	concrete	12	0	NA	0	246	NA
12	concrete	12	34	NA	0	158	NA
13	concrete	12	120	NA	32	0	NA
14	concrete	12	52	NA	0	107	NA
15	concrete	18	0	NA	0	0	NA
16	concrete	0	155	NA	16	394	NA
17	concrete	8	52	NA	28	164	NA
18	concrete	5	86	NA	0	117	NA
19	concrete	5	309	NA	0	114	NA
20	concrete	8	17	NA	0	215	NA

Date Reviewed: 8-21-02 **RS Supervision:** [redacted]

Print Name

ROCKY FLATS ENVIRONMENTAL TECHNOLOGY SITE

SURVEY RESULTS

Swipe	LOCATION	ALPHA Swipe	ALPHA Direct	ALPHA Wipe	BETA Swipe	BETA Direct	BETA Wipe
#		dpm/100cm2	dpm/100cm2	dpm/wipe	dpm/100cm2	dpm/100cm2	dpm/wipe
21	concrete	5	17	NA	0	325	NA
22	concrete	5	17		8	0	
23	concrete	8	86		24	0	
24	concrete	12	52		20	215	
NA	NA	NA	NA		NA	NA	
▼	▼	▼	▼	▼	▼	▼	▼
NA	NA	NA	NA	NA	NA	NA	NA

Drawing Showing Survey Points

*Denotes that there is a detailed survey below of the concrete mixer support blocks.

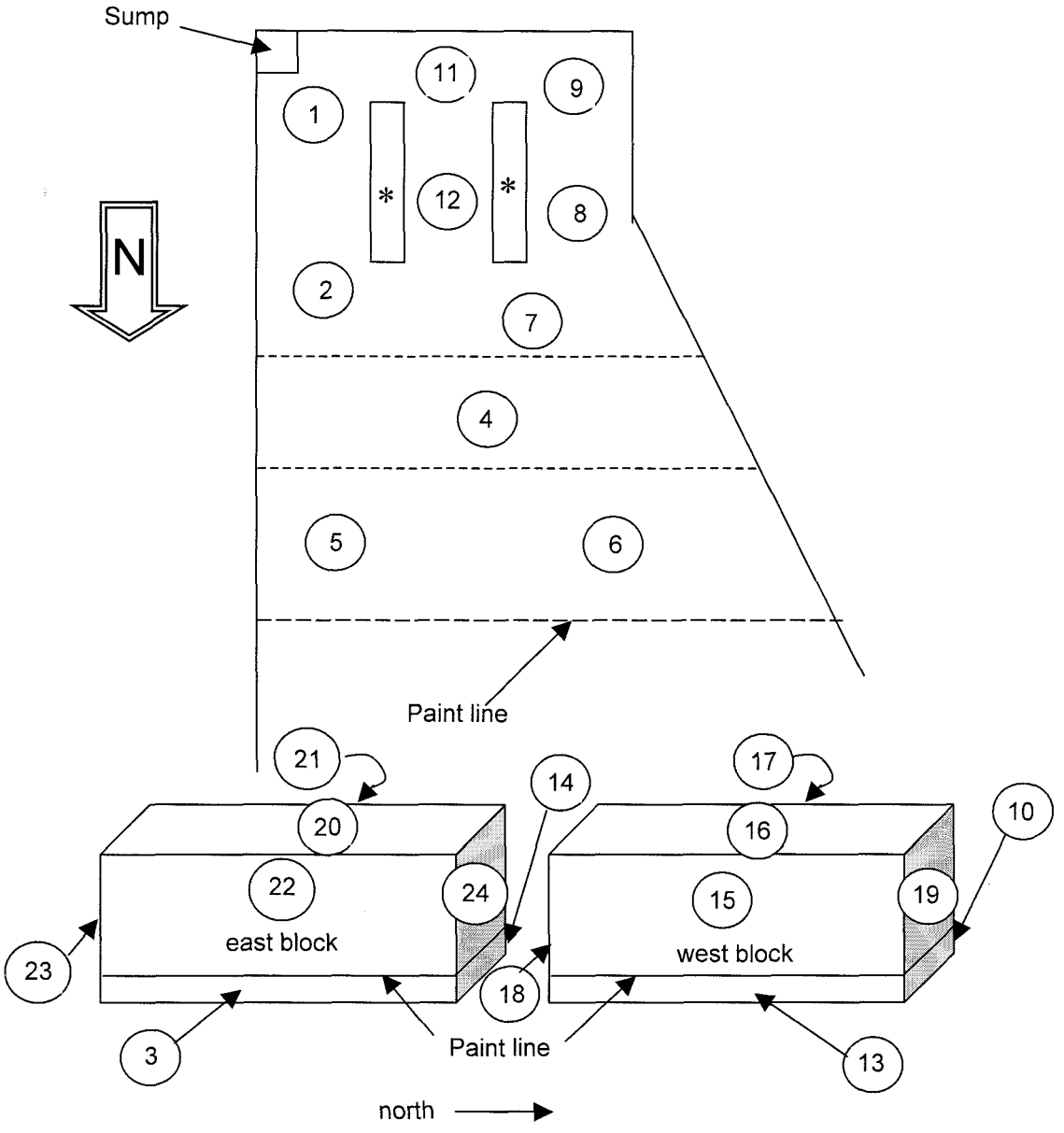

47

ROCKY FLATS ENVIRONMENTAL TECHNOLOGY SITE

INSTRUMENT DATA

Mfg.	Eberline	Mfg.	Eberline	Mfg.	NE Electra
Model	SAC-4	Model	BC-4	Model	DP-6
Serial #	842	Serial #	704	Serial #	1833
Cal Due	10/1/02	Cal Due	10/30/02	Cal Due	10/3/02
Bkg	0.2 cpmα	Bkg	32 cpmβ	Bkg	3 cpmα
Eff.	33 %	Eff.	25 %	Eff.	23.3 %
MDA	20 dpmα	MDA	200 dpmβ	MDA	46 dpmα

Mfg.	Eberline	Mfg.	Eberline	Mfg.	NE Electra
Model	SAC-4	Model	BC-4	Model	DP-6
Serial #	NA	Serial #	NA	Serial #	1833
Cal Due		Cal Due		Cal Due	10/3/02
Bkg	cpmα	Bkg	cpmβ	Bkg	360 cpmβ
Eff.	%	Eff.	%	Eff.	31.7 %
MDA	NA dpmα	MDA	NA dpmβ	MDA	287 dpmβ

Survey Type: Contaqmination
Building: 788
Location: former trailer pad and ramp
Purpose: SCO

RWP #: 02-RISS-020

Date: 8/16/02 Time: 1100

[redacted]

RCT: NA / NA / NA
Print name / Signature / Emp. #

PRN/REN # : NA
Comments: SCO survey number

SURVEY RESULTS

Swipe #	LOCATION	ALPHA Swipe dpm/100cm2	ALPHA Direct dpm/100cm2	ALPHA Wipe dpm/wipe	BETA Swipe dpm/100cm2	BETA Direct dpm/100cm2	BETA Wipe dpm/wipe
1	Concrete	0	21	NA	0	666	NA
2	Concrete	0	13	NA	0	943	NA
3	Concrete	0	9	NA	12	744	NA
4	Concrete	0	9	NA	16	1009	NA
5	Concrete	0	4	NA	0	795	NA
6	Concrete	0	9	NA	0	1006	NA
7	Concrete	0	13	NA	12	1019	NA
8	Concrete	0	21	NA	0	1035	NA
9	Concrete	0	9	NA	0	1498	NA
10	Concrete	0	26	NA	12	946	NA
11	Concrete	0	17	NA	0	975	NA
12	Concrete	0	26	NA	0	517	NA
13	Concrete	0	21	NA	24	410	NA
14	Concrete	0	43	NA	4	312	NA
15	Concrete	0	9	NA	0	416	NA
16	Concrete	0	4	NA	0	404	NA
NA	NA	NA	NA	NA	NA	NA	NA
NA	NA	NA	NA	NA	NA	NA	NA
NA	NA	NA	NA	NA	NA	NA	NA
NA	NA	NA	NA	NA	NA	NA	NA

Date Reviewed: 8-26-02 **RS Supervision:** SCOGGINS / [redacted]
Print Name / Signature

48

Drawing Showing Survey Points

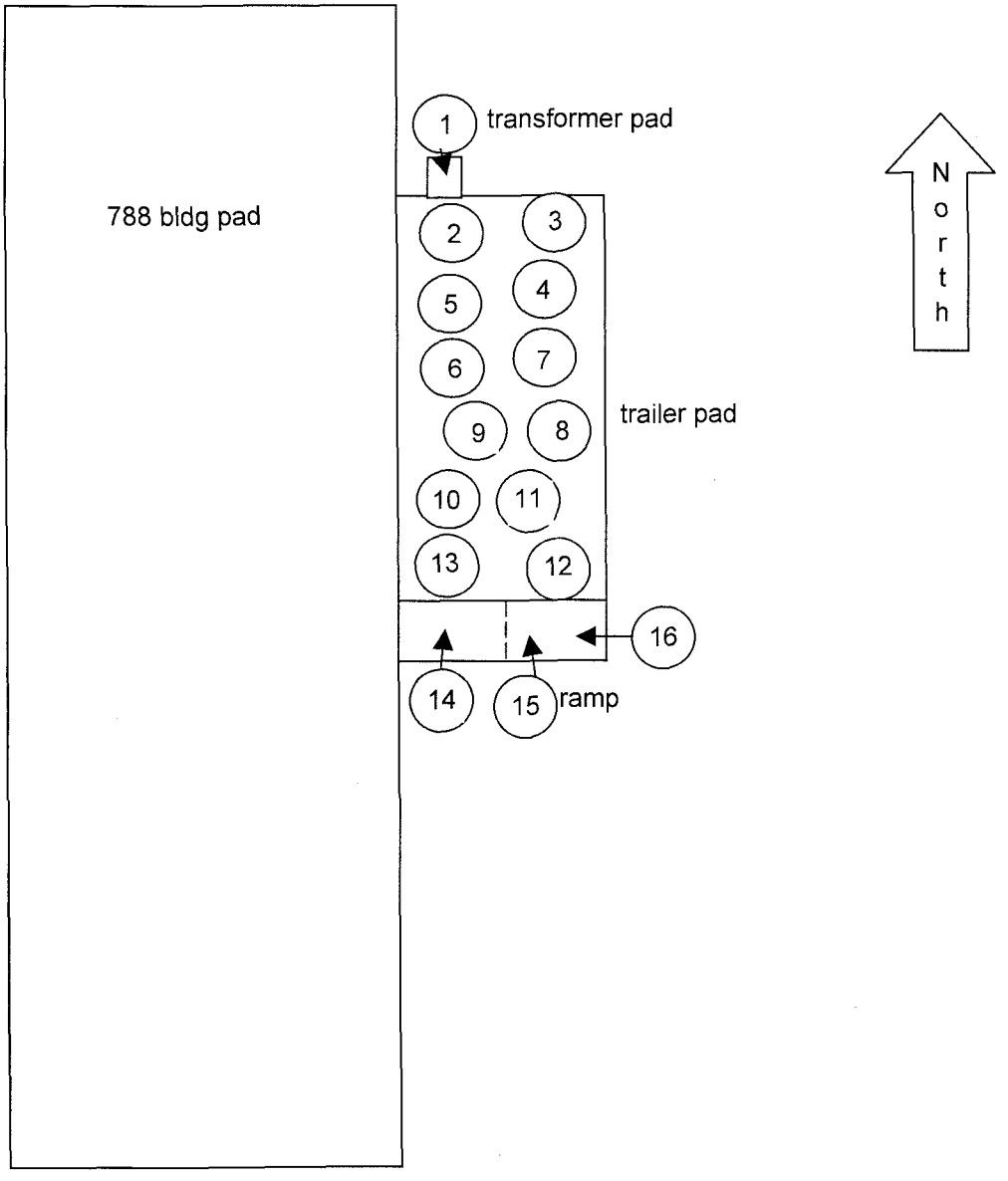

ROCKY FLATS ENVIRONMENTAL TECHNOLOGY SITE

INSTRUMENT DATA

Mfg.	Eberline	Mfg.	NE	Mfg.	NE
Model	SAC 4	Model	Electra	Model	Electra
Serial #	824	Serial #	1589	Serial #	NA
Cal Due	10/30/02	Cal Due	11/22/02	Cal Due	NA
Bkg	0.3 cpmα	Bkg	3 cpmα	Bkg	NA cpmα
Efficiency	33.00 %	Efficiency	21.70 %	Efficiency	NA %
MDA	20 dpmα	MDA	50 dpmα	MDA	###### dpmα

Mfg.	Eberline	Mfg.	NE	Mfg.	NE
Model	BC 4	Model	Electra	Model	Electra
Serial #	704	Serial #	1589	Serial #	NA
Cal Due	10/30/02	Cal Due	11/22/02	Cal Due	NA
Bkg	32.6 cpmb	Bkg	532 cpmβ	Bkg	NA cpmβ
Efficiency	25.00 %	Efficiency	34.20 %	Efficiency	NA %
MDA	200 dpmβ	MDA	322 dpmβ	MDA	###### dpmβ

Survey Type: Contamination- Radiation
Building: Solar Ponds
Location: Routine
Purpose: Daily

RWP #: 02-Riss-020

Date: 8/15/02 Time: 16:00

R [redacted]

RCT: NA / NA / NA
Print name Signature Emp. #

PRN/REN # : NA
Comments: NA

SURVEY RESULTS

Swipe #	Location / Description Results in DPM/100sq.cm	Removable Alpha	Removable Beta	Total Alpha	Total Beta
1	BUCKET	<20	<200	<50	<322
2	BUCKET	<20	<200	<50	<322
3	BUCKET	<20	<200	<50	<322
4	BUCKET	<20	<200	<50	<322
5	BUCKET	<20	<200	<50	<322
6	FRONT LOADER	<20	<200	<50	<322
7	FRONT LOADER	<20	<200	<50	<322
8	FRONT LOADER	<20	< 200	<50	<322
9	FRONT LOADER	<20	< 200	<50	<322
10	FRONT LOADER	<20	< 200	<50	<322
11	NA	NA	NA	NA	NA
12	NA	NA	NA	NA	NA
13	NA	NA	NA	NA	NA
14	NA	NA	NA	NA	NA
15	NA	NA	NA	NA	NA
16	NA	NA	NA	NA	NA
17	NA	NA	NA	NA	NA
18	NA	NA	NA	NA	NA
19	NA	NA	NA	NA	NA
20	NA	NA	NA	NA	NA
21	NA	NA	NA	NA	NA
22	NA	NA	NA	NA	NA
23	NA	NA	NA	NA	NA
24	NA	NA	NA	NA	NA
25	NA	NA	NA	NA	NA

MAP

Date Reviewed: 82502 **RS Supervision:** Steve Gernatt [redacted]
Print Name Signature Emp. #

ROCKY FLATS ENVIRONMENTAL TECHNOLOGY SITE

INSTRUMENT DATA

Mfg.	Eberline	Mfg.	NE	Mfg.	NE
Model	SAC 4	Model	Electra	Model	Electra
Serial #	824	Serial #	1589	Serial #	NA
Cal Due	10/30/02	Cal Due	11/22/02	Cal Due	NA
Bkg	0.3 cpmα	Bkg	3 cpmα	Bkg	NA cpmα
Efficiency	33.00 %	Efficiency	21.70 %	Efficiency	NA %
MDA	20 dpmα	MDA	50 dpmα	MDA	###### dpmα
Mfg.	Eberline	Mfg.	NE	Mfg.	NE
Model	BC 4	Model	Electra	Model	Electra
Serial #	704	Serial #	1589	Serial #	NA
Cal Due	10/30/02	Cal Due	11/22/02	Cal Due	NA
Bkg	32.6 cpmb	Bkg	532 cpmβ	Bkg	NA cpmβ
Efficiency	25.00 %	Efficiency	34.20 %	Efficiency	NA %
MDA	200 dpmβ	MDA	322 dpmβ	MDA	###### dpmβ

Survey Type: Contamination- Radiation
Building: Solar Ponds
Location: Routine
Purpose: Daily
RWP #: 02-Riss-020
Date: 8/15/02 Time: 16:00
RCT: NA / NA / NA

Print name	Signature	Emp. #
[redacted]		

PRN/REN # : NA
Comments: NA

SURVEY RESULTS

Swipe #	Location / Description Results in DPM/100sq.cm	Removable Alpha	Removable Beta	Total Alpha	Total Beta
1	Connex table	< 20	< 200	<50	<322
2	Connex table	< 20	< 200	<50	<322
3	Connex table	< 20	< 200	<50	<322
4	Connex table	< 20	< 200	<50	<322
5	Trash barrel, PPE barrel	< 20	< 200	<50	<322
6	Trash barrel, PPE barrel	< 20	< 200	<50	<322
7	Trash barrel, PPE barrel	< 20	< 200	<50	<322
8	Trash barrel, PPE barrel	< 20	< 200	<50	<322
9	Floor	< 20	< 200	<50	<322
10	Floor	< 20	< 200	<50	<322
11	Floor	< 20	< 200	<50	<322
12	Floor	< 20	< 200	<50	<322
13	Shelf	< 20	< 200	<50	<322
14	Shelf	< 20	< 200	<50	<322
15	Shelf	< 20	< 200	<50	<322
16	Shelf	< 20	< 200	<50	<322
17	NA	NA	NA	NA	NA
18	NA	NA	NA	NA	NA
19	NA	NA	NA	NA	NA
20	NA	NA	NA	NA	NA
21	NA	NA	NA	NA	NA
22	NA	NA	NA	NA	NA
23	NA	NA	NA	NA	NA
24	NA	NA	NA	NA	NA
25	NA	NA	NA	NA	NA

MAP

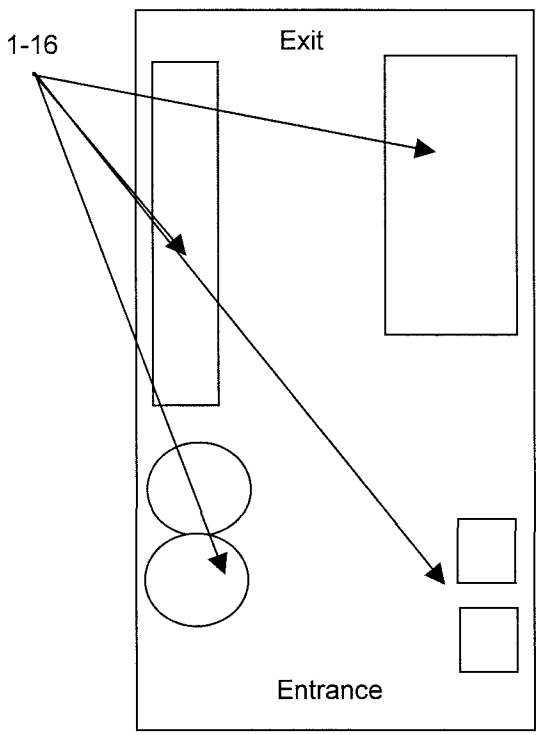

Date Reviewed: 8/15/02 **RS Supervision:** Steve Gernatt / [signature] / [redacted]
Print Name Signature

51

ROCKY FLATS ENVIRONMENTAL TECHNOLOGY SITE

INSTRUMENT DATA

	Eberline	Mfg.	NE	Mfg.	NE
Model	SAC 4	Model	Electra	Model	Electra
Serial #	824	Serial #	1260	Serial #	NA
Cal Due	10/30/02	Cal Due	08/27/02	Cal Due	NA
Bkg	0.5 cpmα	Bkg	1 cpmα	Bkg	NA cpmα
Efficiency	33.00 %	Efficiency	21.20 %	Efficiency	NA %
MDA	20 dpmα	MDA	35 dpmα	MDA	###### dpmα
Mfg.	Eberline	Mfg.	NE	Mfg.	NE
Model	BC 4	Model	Electra	Model	Electra
Serial #	704	Serial #	1260	Serial #	NA
Cal Due	10/30/02	Cal Due	08/27/02	Cal Due	NA
Bkg	35.2 cpmβ	Bkg	287 cpmβ	Bkg	NA cpmβ
Efficiency	25.00 %	Efficiency	28.40 %	Efficiency	NA %
MDA	200 dpmβ	MDA	287 dpmβ	MDA	###### dpmβ

Survey Type: Contamination
Building: Solar Ponds
Location: Solar Ponds
Purpose: End of Shift Survey

RWP #: 02-Riss-020

Date: 8/15/02 Time: 16:00

[redacted]

RCT: NA / NA / NA
Print name Signature Emp. #

PRN/REN # : NA
Comments: NA

SURVEY RESULTS

Swipe #	Location / Description Results in DPM/100sq.cm	Removable		Total	
		Alpha	Beta	Alpha	Beta
1	Teeth	< 20	< 200	<50	<322
2	I/S bucket	< 20	< 200	<50	<322
3	I/S bucket	< 20	< 200	<50	<322
4	O/S bucket	< 20	< 200	<50	<322
5	O/S bucket	< 20	< 200	<50	<322
6	END OF SURVEY	NA	NA	NA	NA
7	NA	NA	NA	NA	NA
8	NA	NA	NA	NA	NA
9	NA	NA	NA	NA	NA
10	NA	NA	NA	NA	NA
11	NA	NA	NA	NA	NA
12	NA	NA	NA	NA	NA
13	NA	NA	NA	NA	NA
14	NA	NA	NA	NA	NA
15	NA	NA	NA	NA	NA
16	NA	NA	NA	NA	NA
17	NA	NA	NA	NA	NA
18	NA	NA	NA	NA	NA
19	NA	NA	NA	NA	NA
20	NA	NA	NA	NA	NA
21	NA	NA	NA	NA	NA
22	NA	NA	NA	NA	NA
23	NA	NA	NA	NA	NA
24	NA	NA	NA	NA	NA
25	NA	NA	NA	NA	NA

MAP

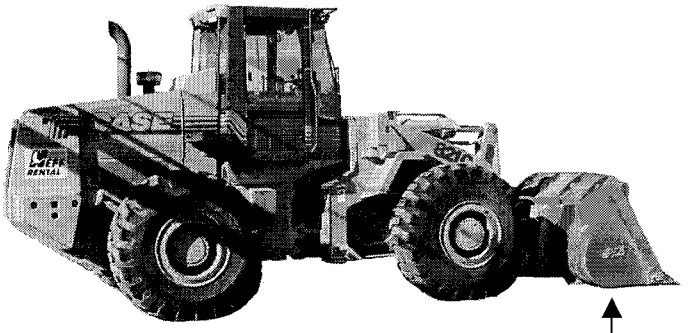

1-5

Date Reviewed: 8/15/02 **RS Supervision:** Steve Gernatt / [redacted]
Print Name Signature

5J

ROCKY FLATS ENVIRONMENTAL TECHNOLOGY SITE

INSTRUMENT DATA

Mfg.	Eberline	Mfg.	NE	Mfg.	NE
Model	SAC 4	Model	Electra	Model	Electra
Serial #	824	Serial #	1589	Serial #	NA
Cal Due	10/30/02	Cal Due	11/22/02	Cal Due	NA
Bkg	0.3 cpmα	Bkg	3 cpmα	Bkg	NA cpmα
Efficiency	33.00 %	Efficiency	21.70 %	Efficiency	NA %
MDA	20 dpmα	MDA	50 dpmα	MDA	###### dpmα

Mfg.	Eberline	Mfg.	NE	Mfg.	NE
Model	BC 4	Model	Electra	Model	Electra
Serial #	704	Serial #	1589	Serial #	NA
Cal Due	10/30/02	Cal Due	11/22/02	Cal Due	NA
Bkg	32.6 cpmβ	Bkg	532 cpmβ	Bkg	NA cpmβ
Efficiency	25.00 %	Efficiency	34.20 %	Efficiency	NA %
MDA	200 dpmβ	MDA	322 dpmβ	MDA	###### dpmβ

Survey Type: Contaminaton
Building: Solar Ponds
Location: Solar Ponds
Purpose: Daily

RWP #: 02-Riss-020

Date: 8/15/02 Time: 16:00

[redacted]

RCT:	NA	NA	NA
	Print name	Signature	Emp. #

PRN/REN # : NA
Comments: NA

SURVEY RESULTS

Swipe #	Location / Description Results in DPM/100sq.cm	Removable		Total	
		Alpha	Beta	Alpha	Beta
1	blade	< 20	< 200	<50	<322
2	blade	< 20	< 200	<50	<322
3	blade	< 20	< 200	<50	<322
4	blade	< 20	< 200	<50	<322
5	blade	< 20	< 200	<50	<322
6	body	< 20	< 200	<50	<322
7	body	< 20	< 200	<50	<322
8	body	< 20	< 200	<50	<322
9	body	< 20	< 200	<50	<322
10	body	< 20	< 200	<50	<322
11	END OF SURVEY	NA	NA	NA	NA
12	NA	NA	NA	NA	NA
13	NA	NA	NA	NA	NA
14	NA	NA	NA	NA	NA
15	NA	NA	NA	NA	NA
16	NA	NA	NA	NA	NA
17	NA	NA	NA	NA	NA
18	NA	NA	NA	NA	NA
19	NA	NA	NA	NA	NA
20	NA	NA	NA	NA	NA
21	NA	NA	NA	NA	NA
22	NA	NA	NA	NA	NA
23	NA	NA	NA	NA	NA
24	NA	NA	NA	NA	NA
25	NA	NA	NA	NA	NA

MAP

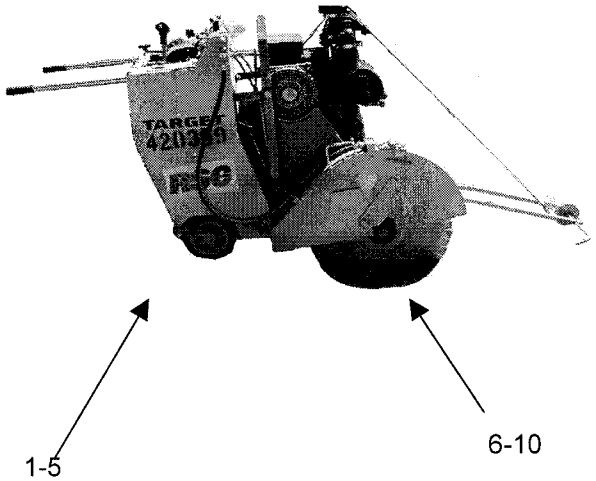

Date Reviewed: 8-25-02 **RS Supervision:** Steve Gernatt [redacted]
Print Name Signature

ROCKY FLATS ENVIRONMENTAL TECHNOLOGY SITE

INSTRUMENT DATA

Mfg.	Eberline	Mfg.	NE	Mfg.	NE
Model	SAC 4	Model	Electra	Model	Electra
Serial #	824	Serial #	1589	Serial #	NA
Cal Due	10/30/02	Cal Due	11/22/02	Cal Due	NA
Bkg	0.3 cpmα	Bkg	3 cpmα	Bkg	NA cpmα
Efficiency	33.00 %	Efficiency	21.70 %	Efficiency	NA %
MDA	20 dpmα	MDA	50 dpmα	MDA	###### dpmα

Mfg.	Eberline	Mfg.	NE	Mfg.	NE
Model	BC 4	Model	Electra	Model	Electra
Serial #	704	Serial #	1589	Serial #	NA
Cal Due	10/30/02	Cal Due	11/22/02	Cal Due	NA
Bkg	32.6 cpmb	Bkg	532 cpmβ	Bkg	NA cpmβ
Efficiency	25.00 %	Efficiency	34.20 %	Efficiency	NA %
MDA	200 dpmβ	MDA	322 dpmβ	MDA	###### dpmβ

Survey Type: Contamination- Radiation
Building: Solar Ponds
Location: Routine
Purpose: Daily

RWP #: 02-Riss-020

Date: 8/15/02 Time: 16:00

[redacted]

RCT: NA / NA / NA
Print name / Signature / Emp. #

PRN/REN # : NA
Comments: NA

SURVEY RESULTS

Swipe #	Location / Description Results in DPM/100sq.cm	Removable Alpha	Removable Beta	Total Alpha	Total Beta
1	finger	<20	<200	<50	<322
2	finger	<20	<200	<50	<322
3	finger	<20	<200	<50	<322
4	finger	<20	<200	<50	<322
5	finger	<20	<200	<50	<322
6	tracks	<20	<200	<50	<322
7	tracks	<20	<200	<50	<322
8	tracks	<20	< 200	<50	<322
9	tracks	<20	< 200	<50	<322
10	tracks	<20	< 200	<50	<322
11	tracks	<20	< 200	<50	<322
12	tracks	<20	< 200	<50	<322
13	tracks	<20	< 200	<50	<322
14	tracks	<20	< 200	<50	<322
15	tracks	<20	< 200	<50	<322
16	cab	<20	<200	<50	<322
17	cab	<20	<200	<50	<322
18	NA	NA	NA	NA	NA
19	NA	NA	NA	NA	NA
20	NA	NA	NA	NA	NA
21	NA	NA	NA	NA	NA
22	NA	NA	NA	NA	NA
23	NA	NA	NA	NA	NA
24	NA	NA	NA	NA	NA
25	NA	NA	NA	NA	NA

MAP

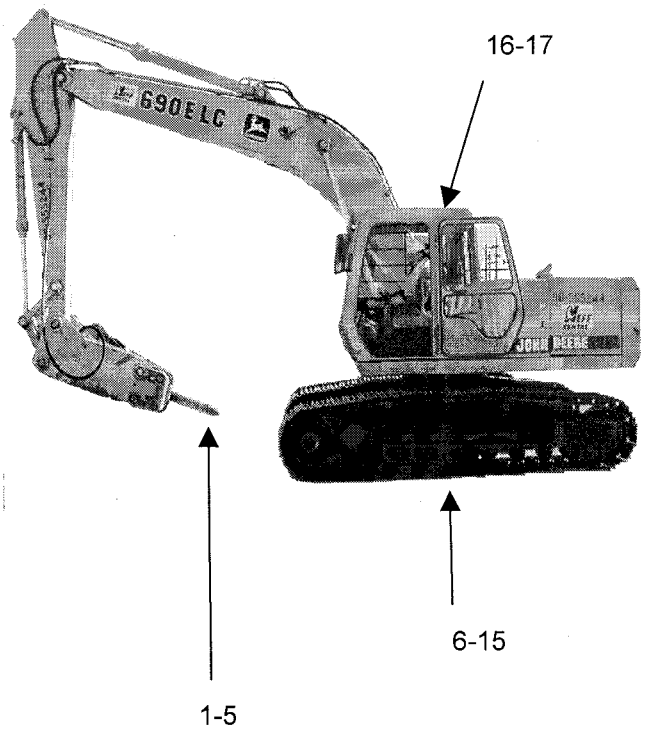

Date Reviewed: 8/15/02 **RS Supervision:** Steve Gernatt / [redacted]
Print Name / Signature

ROCKY FLATS ENVIRONMENTAL TECHNOLOGY SITE

INSTRUMENT DATA

Mfg.	Eberline	Mfg.	NE	Mfg.	NE
Model	SAC 4	Model	Electra	Model	Electra
Serial #	824	Serial #	1589	Serial #	NA
Cal Due	10/30/02	Cal Due	11/22/02	Cal Due	NA
Bkg	0.3 cpmα	Bkg	3 cpmα	Bkg	NA cpmα
Efficiency	33.00 %	Efficiency	21.70 %	Efficiency	NA %
MDA	20 dpmα	MDA	50 dpmα	MDA	###### dpmα

Mfg.	Eberline	Mfg.	NE	Mfg.	NE
Model	BC 4	Model	Electra	Model	Electra
Serial #	704	Serial #	1589	Serial #	NA
Cal Due	10/30/02	Cal Due	3/31/01	Cal Due	NA
Bkg	32.6 cpmb	Bkg	532 cpmβ	Bkg	NA cpmβ
Efficiency	25.00 %	Efficiency	34.20 %	Efficiency	NA %
MDA	200 dpmβ	MDA	322 dpmβ	MDA	###### dpmβ

Survey Type: Contamination- Radiation
Building: Solar Ponds
Location: Between A and B Pads
Purpose: Daily

RWP #: 02-Riss-020

Date: 8/15/02 Time: 16:00

[redacted]

RCT: NA / NA / NA
Print name Signature Emp. #

PRN/REN # : NA
Comments: NA

SURVEY RESULTS

Swipe #	Location / Description Results in DPM/100sq.cm	Removable		Total	
		Alpha	Beta	Alpha	Beta
1	BUCKET	< 20	< 200	<50	<322
2	BUCKET	< 20	< 200	<50	<322
3	BUCKET	< 20	< 200	<50	<322
4	BUCKET	< 20	< 200	<50	<322
5	TRACKS	< 20	< 200	<50	<322
6	TRACKS	< 20	< 200	<50	<322
7	TRACKS	< 20	< 200	<50	<322
8	TRACKS	< 20	< 200	<50	<322
9	CAB	< 20	< 200	<50	<322
10	CAB	< 20	< 200	<50	<322
11	NA	NA	NA	NA	NA
12	NA	NA	NA	NA	NA
13	NA	NA	NA	NA	NA
14	NA	NA	NA	NA	NA
15	NA	NA	NA	NA	NA
16	NA	NA	NA	NA	NA
17	NA	NA	NA	NA	NA
18	NA	NA	NA	NA	NA
19	NA	NA	NA	NA	NA
20	NA	NA	NA	NA	NA
21	NA	NA	NA	NA	NA
22	NA	NA	NA	NA	NA
23	NA	NA	NA	NA	NA
24	NA	NA	NA	NA	NA
25	NA	NA	NA	NA	NA

MAP

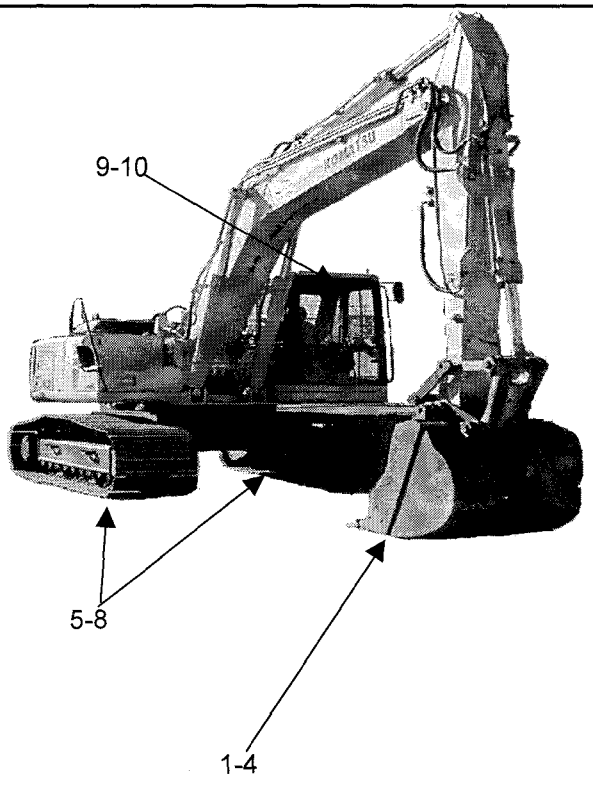

Date Reviewed: 8/20/02 **RS Supervision:** Steve Gernatt / [signature] /
Print Name Signature [redacted]

ROCKY FLATS ENVIRONMENTAL TECHNOLOGY SITE

INSTRUMENT DATA

Mfg.	Eberline	Mfg.	NE	Mfg.	NE
Model	SAC 4	Model	Electra	Model	Electra
Serial #	824	Serial #	1589	Serial #	NA
Cal Due	10/30/02	Cal Due	11/22/02	Cal Due	NA
Bkg	0.3 cpmα	Bkg	3 cpmα	Bkg	NA cpmα
Efficiency	33.00 %	Efficiency	21.70 %	Efficiency	NA %
MDA	20 dpmα	MDA	50 dpmα	MDA	###### dpmα

Mfg.	Eberline	Mfg.	NE	Mfg.	NE
Model	BC 4	Model	Electra	Model	Electra
Serial #	704	Serial #	1589	Serial #	NA
Cal Due	10/30/02	Cal Due	11/22/02	Cal Due	NA
Bkg	32.6 cpmβ	Bkg	532 cpmβ	Bkg	NA cpmβ
Efficiency	25.00 %	Efficiency	34.20 %	Efficiency	NA %
MDA	200 dpmβ	MDA	322 dpmβ	MDA	###### dpmβ

Survey Type: Contaminaton
Building: Solar Ponds
Location: Solar Ponds
Purpose: Daily

RWP #: 02-Riss-020

Date: 8/15/02 Time: 16:00

[redacted]

RCT: NA NA / NA
Print name Signature Emp. #

PRN/REN # : NA
Comments: NA

SURVEY RESULTS

Swipe #	Location / Description Results in DPM/100sq.cm	Removable		Total	
		Alpha	Beta	Alpha	Beta
1	blade	< 20	< 200	<50	<322
2	blade	< 20	< 200	<50	<322
3	blade	< 20	< 200	<50	<322
4	blade	< 20	< 200	<50	<322
5	blade	< 20	< 200	<50	<322
6	body	< 20	< 200	<50	<322
7	body	< 20	< 200	<50	<322
8	body	< 20	< 200	<50	<322
9	body	< 20	< 200	<50	<322
10	body	< 20	< 200	<50	<322
11	END OF SURVEY	NA	NA	NA	NA
12	NA	NA	NA	NA	NA
13	NA	NA	NA	NA	NA
14	NA	NA	NA	NA	NA
15	NA	NA	NA	NA	NA
16	NA	NA	NA	NA	NA
17	NA	NA	NA	NA	NA
18	NA	NA	NA	NA	NA
19	NA	NA	NA	NA	NA
20	NA	NA	NA	NA	NA
21	NA	NA	NA	NA	NA
22	NA	NA	NA	NA	NA
23	NA	NA	NA	NA	NA
24	NA	NA	NA	NA	NA
25	NA	NA	NA	NA	NA

MAP

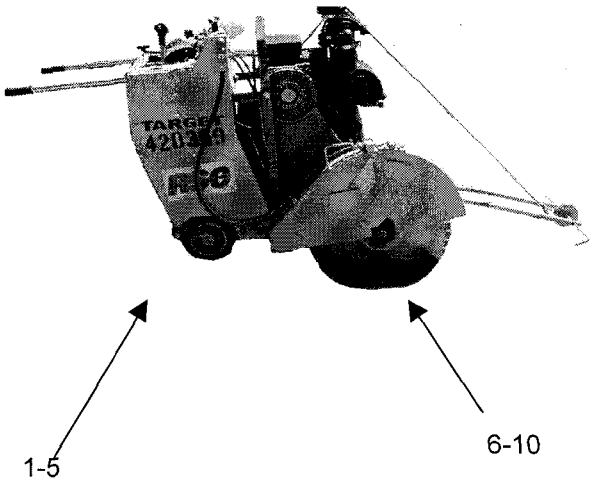

Date Reviewed: 82502 **RS Supervision:** Steve Gernatt / [redacted]
Print Name Signature

56

ROCKY FLATS ENVIRONMENTAL TECHNOLOGY SITE

INSTRUMENT DATA

Mfg.	Eberline	Mfg.	NE	Mfg.	NE
Model	SAC 4	Model	Electra	Model	Electra
Serial #	824	Serial #	1833	Serial #	NA
Cal Due	10/30/02	Cal Due	10/03/02	Cal Due	NA
Bkg	0.2 cpmα	Bkg	4 cpmα	Bkg	NA cpmα
Efficiency	33.00 %	Efficiency	23.30 %	Efficiency	NA %
MDA	20 dpmα	MDA	52 dpmα	MDA	###### dpmα

Mfg.	Eberline	Mfg.	NE	Mfg.	NE
Model	BC 4	Model	Electra	Model	Electra
Serial #	704	Serial #	1833	Serial #	NA
Cal Due	10/30/02	Cal Due	10/03/02	Cal Due	NA
Bkg	32 cpmβ	Bkg	588 cpmβ	Bkg	NA cpmβ
Efficiency	25.00 %	Efficiency	31.70 %	Efficiency	NA %
MDA	200 dpmβ	MDA	364 dpmβ	MDA	###### dpmβ

Survey Type: Contaminaton
Building: Solar Ponds
Location: Solar Ponds
Purpose: Daily

RWP #: 02-RISS-020

Date: 8/15/02 Time: 15:00

[redacted]

RCT:	NA	NA	NA
	Print name	Signature	Emp. #

PRN/REN # : NA
Comments: NA

SURVEY RESULTS

Swipe #	Location / Description Results in DPM/100sq.cm	Removable Alpha	Removable Beta	Total Alpha	Total Beta
1	blade	< 20	< 200	< 52	< 364
2	blade	< 20	< 200	< 52	< 364
3	blade	< 20	< 200	< 52	< 364
4	blade	< 20	< 200	< 52	< 364
5	blade	< 20	< 200	< 52	< 364
6	body	< 20	< 200	< 52	< 364
7	body	< 20	< 200	< 52	< 364
8	body	< 20	< 200	< 52	< 364
9	body	< 20	< 200	< 52	< 364
10	body	< 20	< 200	< 52	< 364
11	END OF SURVEY	NA	NA	NA	NA
12	NA	NA	NA	NA	NA
13	NA	NA	NA	NA	NA
14	NA	NA	NA	NA	NA
15	NA	NA	NA	NA	NA
16	NA	NA	NA	NA	NA
17	NA	NA	NA	NA	NA
18	NA	NA	NA	NA	NA
19	NA	NA	NA	NA	NA
20	NA	NA	NA	NA	NA
21	NA	NA	NA	NA	NA
22	NA	NA	NA	NA	NA
23	NA	NA	NA	NA	NA
24	NA	NA	NA	NA	NA
25	NA	NA	NA	NA	NA

MAP

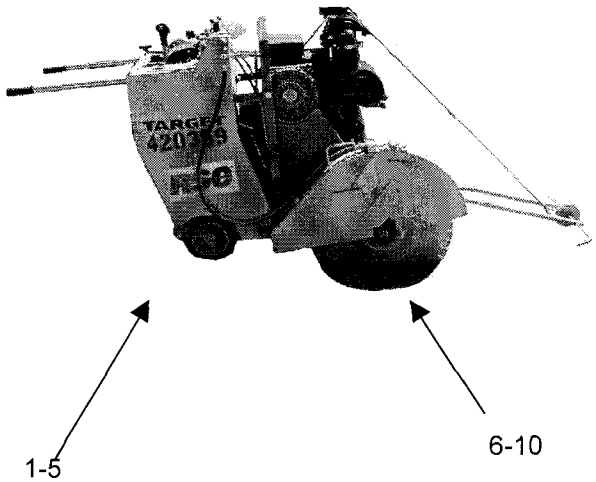

Date Reviewed: 8/15/02 **RS Supervision:** Steve Gernatt [redacted]
Print Name Signature

ROCKY FLATS ENVIRONMENTAL TECHNOLOGY SITE

INSTRUMENT DATA

Mfg.	Eberline	Mfg.	NE	Mfg.	NE
Model	SAC 4	Model	Electra	Model	Electra
Serial #	824	Serial #	1833	Serial #	NA
Cal Due	10/30/02	Cal Due	10/3/02	Cal Due	NA
Bkg	0.2 cpmα	Bkg	4 cpmα	Bkg	NA cpmα
Efficiency	33.00 %	Efficiency	23.30 %	Efficiency	NA %
MDA	20 dpmα	MDA	52 dpmα	MDA	###### dpmα

Mfg.	Eberline	Mfg.	NE	Mfg.	NE
Model	BC 4	Model	Electra	Model	Electra
Serial #	704	Serial #	1833	Serial #	NA
Cal Due	10/30/02	Cal Due	10/3/02	Cal Due	NA
Bkg	32 cpmb	Bkg	588 cpmβ	Bkg	NA cpmβ
Efficiency	25.00 %	Efficiency	31.70 %	Efficiency	NA %
MDA	200 dpmβ	MDA	364 dpmβ	MDA	###### dpmβ

Survey Type: Contamination- Radiation
Building: Solar Ponds
Location: Routine
Purpose: Daily

RWP #: 02-Riss-020

Date: 8/15/02 Time: 15:00

[redacted]

RCT: NA / NA / NA
Print name Signature Emp. #

PRN/REN # : NA
Comments: NA

SURVEY RESULTS

Swipe #	Location / Description Results in DPM/100sq.cm	Removable		Total	
		Alpha	Beta	Alpha	Beta
1	BUCKET	<20	<200	< 52	< 364
2	BUCKET	<20	<200	< 52	< 364
3	BUCKET	<20	<200	< 52	< 364
4	BUCKET	<20	<200	< 52	< 364
5	BUCKET	<20	<200	< 52	< 364
6	FRONT LOADER	<20	<200	< 52	< 364
7	FRONT LOADER	<20	<200	< 52	< 364
8	FRONT LOADER	<20	< 200	< 52	< 364
9	FRONT LOADER	<20	< 200	< 52	< 364
10	FRONT LOADER	<20	< 200	< 52	< 364
11	NA	NA	NA	NA	NA
12	NA	NA	NA	NA	NA
13	NA	NA	NA	NA	NA
14	NA	NA	NA	NA	NA
15	NA	NA	NA	NA	NA
16	NA	NA	NA	NA	NA
17	NA	NA	NA	NA	NA
18	NA	NA	NA	NA	NA
19	NA	NA	NA	NA	NA
20	NA	NA	NA	NA	NA
21	NA	NA	NA	NA	NA
22	NA	NA	NA	NA	NA
23	NA	NA	NA	NA	NA
24	NA	NA	NA	NA	NA
25	NA	NA	NA	NA	NA

MAP

Date Reviewed: 82502 **RS Supervision:** Steve Gernatt / [signature] /
Print Name Signature

ROCKY FLATS ENVIRONMENTAL TECHNOLOGY SITE

INSTRUMENT DATA

Mfg.	Eberline	Mfg.	NE	Mfg.	NE
Model	SAC 4	Model	Electra	Model	Electra
Serial #	824	Serial #	1833	Serial #	NA
Cal Due	10/30/02	Cal Due	10/3/02	Cal Due	NA
Bkg	0.2 cpmα	Bkg	4 cpmα	Bkg	NA cpmα
Efficiency	33.00 %	Efficiency	23.30 %	Efficiency	NA %
MDA	20 dpmα	MDA	52 dpmα	MDA	###### dpmα

Mfg.	Eberline	Mfg.	NE	Mfg.	NE
Model	BC 4	Model	Electra	Model	Electra
Serial #	704	Serial #	1833	Serial #	NA
Cal Due	10/30/02	Cal Due	10/3/02	Cal Due	NA
Bkg	32 cpmb	Bkg	588 cpmβ	Bkg	NA cpmβ
Efficiency	25.00 %	Efficiency	31.70 %	Efficiency	NA %
MDA	200 dpmβ	MDA	364 dpmβ	MDA	###### dpmβ

Survey Type: Contamination- Radiation
Building: Solar Ponds
Location: Routine
Purpose: Daily

RWP #: 02-Riss-020

Date: 8/15/02 Time: 15:00

RCT: NA / NA / NA

Print name	Signature	Emp. #
[redacted]		

PRN/REN # : NA
Comments: NA

SURVEY RESULTS

Swipe #	Location / Description Results in DPM/100sq.cm	Removable Alpha	Removable Beta	Total Alpha	Total Beta
1	Connex table	< 20	< 200	< 52	< 364
2	Connex table	< 20	< 200	< 52	< 364
3	Connex table	< 20	< 200	< 52	< 364
4	Connex table	< 20	< 200	< 52	< 364
5	Trash barrel, PPE barrel	< 20	< 200	< 52	< 364
6	Trash barrel, PPE barrel	< 20	< 200	< 52	< 364
7	Trash barrel, PPE barrel	< 20	< 200	< 52	< 364
8	Trash barrel, PPE barrel	< 20	< 200	< 52	< 364
9	Floor	< 20	< 200	< 52	< 364
10	Floor	< 20	< 200	< 52	< 364
11	Floor	< 20	< 200	< 52	< 364
12	Floor	< 20	< 200	< 52	< 364
13	Shelf	< 20	< 200	< 52	< 364
14	Shelf	< 20	< 200	< 52	< 364
15	Shelf	< 20	< 200	< 52	< 364
16	Shelf	< 20	< 200	< 52	< 364
17	NA	NA	NA	NA	NA
18	NA	NA	NA	NA	NA
19	NA	NA	NA	NA	NA
20	NA	NA	NA	NA	NA
21	NA	NA	NA	NA	NA
22	NA	NA	NA	NA	NA
23	NA	NA	NA	NA	NA
24	NA	NA	NA	NA	NA
25	NA	NA	NA	NA	NA

MAP

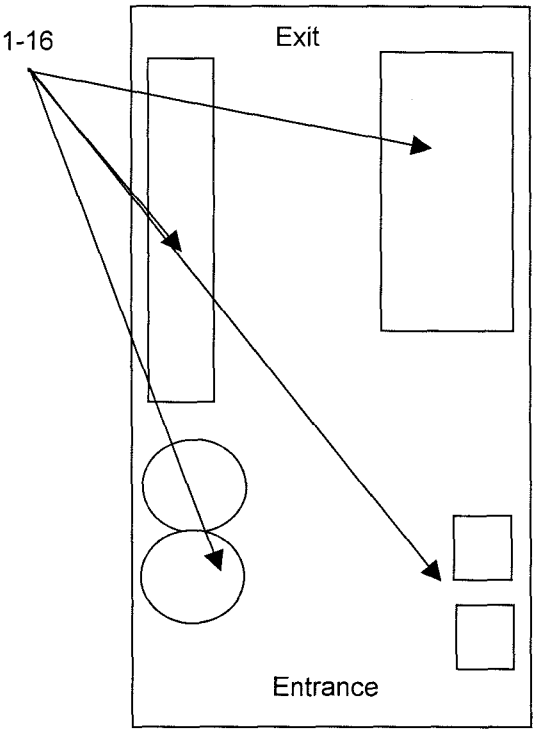

Date Reviewed: 8 25 02 **RS Supervision:** Steve Gernatt / [signature] /
Print Name Signature [redacted]

591

ROCKY FLATS ENVIRONMENTAL TECHNOLOGY SITE

INSTRUMENT DATA

Mfg.	Eberline	Mfg.	NE	Mfg.	NE
Model	SAC 4	Model	Electra	Model	Electra
Serial #	824	Serial #	1833	Serial #	NA
Cal Due	10/30/02	Cal Due	10/3/02	Cal Due	NA
Bkg	0.2 cpmα	Bkg	4 cpmα	Bkg	NA cpmα
Efficiency	33.00 %	Efficiency	23.30 %	Efficiency	NA %
MDA	20 dpmα	MDA	52 dpmα	MDA	###### dpmα

Mfg.	Eberline	Mfg.	NE	Mfg.	NE
Model	BC 4	Model	Electra	Model	Electra
Serial #	704	Serial #	1833	Serial #	NA
Cal Due	10/30/02	Cal Due	10/3/02	Cal Due	NA
Bkg	32 cpmb	Bkg	588 cpmβ	Bkg	NA cpmβ
Efficiency	25.00 %	Efficiency	31.70 %	Efficiency	NA %
MDA	200 dpmβ	MDA	364 dpmβ	MDA	###### dpmβ

Survey Type: Contamination- Radiation
Building: Solar Ponds
Location: Routine
Purpose: Daily

RWP #: 02-Riss-020

Date: 8/15/02 Time: 16:00

[redacted]

RCT: NA / NA / NA
Print name Signature Emp. #

PRN/REN # : NA
Comments: NA

SURVEY RESULTS

Swipe #	Location / Description Results in DPM/100sq.cm	Removable		Total	
		Alpha	Beta	Alpha	Beta
1	finger	<20	<200	< 52	< 364
2	finger	<20	<200	< 52	< 364
3	finger	<20	<200	< 52	< 364
4	finger	<20	<200	< 52	< 364
5	finger	<20	<200	< 52	< 364
6	tracks	<20	<200	< 52	< 364
7	tracks	<20	<200	< 52	< 364
8	tracks	<20	< 200	< 52	< 364
9	tracks	<20	< 200	< 52	< 364
10	tracks	<20	< 200	< 52	< 364
11	tracks	<20	< 200	< 52	< 364
12	tracks	<20	< 200	< 52	< 364
13	tracks	<20	< 200	< 52	< 364
14	tracks	<20	< 200	< 52	< 364
15	tracks	<20	< 200	< 52	< 364
16	cab	<20	<200	< 52	< 364
17	cab	<20	<200	< 52	< 364
18	NA	NA	NA	NA	NA
19	NA	NA	NA	NA	NA
20	NA	NA	NA	NA	NA
21	NA	NA	NA	NA	NA
22	NA	NA	NA	NA	NA
23	NA	NA	NA	NA	NA
24	NA	NA	NA	NA	NA
25	NA	NA	NA	NA	NA

MAP

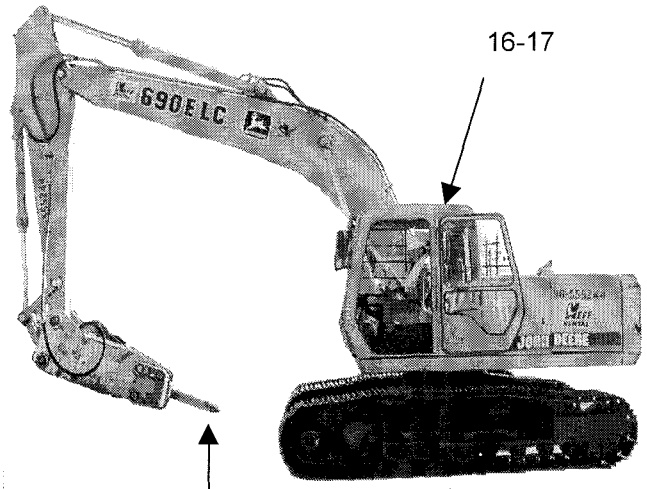

Date Reviewed: 8/15/02 **RS Supervision:** Steve Gernatt / [signature] / [redacted]
Print Name Signature Emp. #

ROCKY FLATS ENVIRONMENTAL TECHNOLOGY SITE

INSTRUMENT DATA

Mfg.	Eberline	Mfg.	NE	Mfg.	NE
Model	SAC 4	Model	Electra	Model	Electra
Serial #	824	Serial #	1833	Serial #	NA
Cal Due	10/30/02	Cal Due	10/3/02	Cal Due	NA
Bkg	0.2 cpmα	Bkg	4 cpmα	Bkg	NA cpmα
Efficiency	33.00 %	Efficiency	23.30 %	Efficiency	NA %
MDA	20 dpmα	MDA	52 dpmα	MDA	###### dpmα

Mfg.	Eberline	Mfg.	NE	Mfg.	NE
Model	BC 4	Model	Electra	Model	Electra
Serial #	704	Serial #	1833	Serial #	NA
Cal Due	10/30/02	Cal Due	3/31/01	Cal Due	NA
Bkg	32 cpmb	Bkg	588 cpmβ	Bkg	NA cpmβ
Efficiency	25.00 %	Efficiency	31.70 %	Efficiency	NA %
MDA	200 dpmβ	MDA	364 dpmβ	MDA	###### dpmβ

Survey Type: Contamination- Radiation
Building: Solar Ponds
Location: Between A and B Pads
Purpose: Daily

RWP #: 02-Riss-020

Date: 8/15/02 Time: 15:00

[redacted]

RCT: NA / NA / NA
Print name Signature Emp. #

PRN/REN # : NA
Comments: NA

SURVEY RESULTS

Swipe #	Location / Description Results in DPM/100sq.cm	Removable Alpha	Removable Beta	Total Alpha	Total Beta
1	BUCKET	< 20	< 200	< 52	< 364
2	BUCKET	< 20	< 200	< 52	< 364
3	BUCKET	< 20	< 200	< 52	< 364
4	BUCKET	< 20	< 200	< 52	< 364
5	TRACKS	< 20	< 200	< 52	< 364
6	TRACKS	< 20	< 200	< 52	< 364
7	TRACKS	< 20	< 200	< 52	< 364
8	TRACKS	< 20	< 200	< 52	< 364
9	CAB	< 20	< 200	< 52	< 364
10	CAB	< 20	< 200	< 52	< 364
11	NA	NA	NA	NA	NA
12	NA	NA	NA	NA	NA
13	NA	NA	NA	NA	NA
14	NA	NA	NA	NA	NA
15	NA	NA	NA	NA	NA
16	NA	NA	NA	NA	NA
17	NA	NA	NA	NA	NA
18	NA	NA	NA	NA	NA
19	NA	NA	NA	NA	NA
20	NA	NA	NA	NA	NA
21	NA	NA	NA	NA	NA
22	NA	NA	NA	NA	NA
23	NA	NA	NA	NA	NA
24	NA	NA	NA	NA	NA
25	NA	NA	NA	NA	NA

MAP

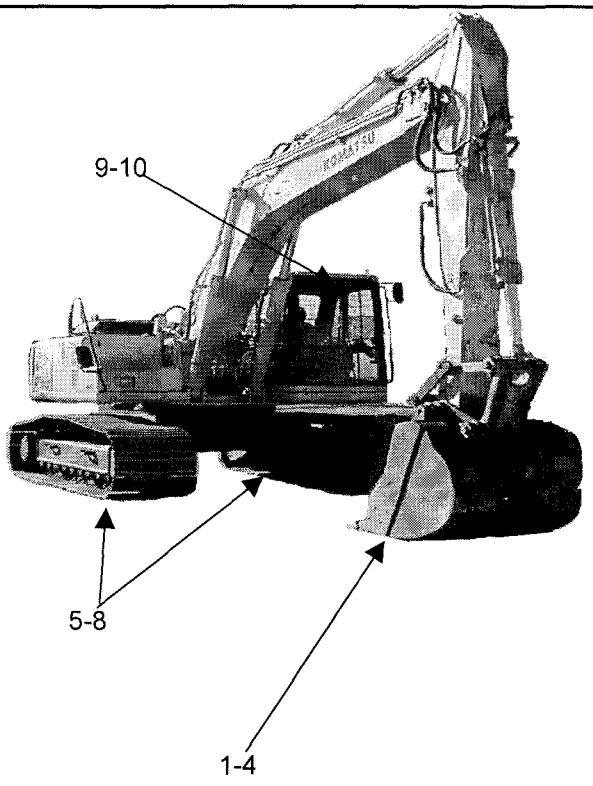

Date Reviewed: 8/15/02 **RS Supervision:** Steve Gernatt / [redacted]
Print Name Signature

ROCKY FLATS ENVIRONMENTAL TECHNOLOGY SITE

INSTRUMENT DATA

	Eberline	Mfg.	NE	Mfg.	NE
Model	SAC 4	Model	Electra	Model	Electra
Serial #	824	Serial #	1260	Serial #	NA
Cal Due	10/30/02	Cal Due	08/27/02	Cal Due	NA
Bkg	0.5 cpmα	Bkg	1 cpmα	Bkg	NA cpmα
Efficiency	33.00 %	Efficiency	21.20 %	Efficiency	NA %
MDA	20 dpmα	MDA	35 dpmα	MDA	###### dpmα

Mfg.	Eberline	Mfg.	NE	Mfg.	NE
Model	BC 4	Model	Electra	Model	Electra
Serial #	704	Serial #	1260	Serial #	NA
Cal Due	10/30/02	Cal Due	08/27/02	Cal Due	NA
Bkg	35.2 cpmβ	Bkg	287 cpmβ	Bkg	NA cpmβ
Efficiency	25.00 %	Efficiency	28.40 %	Efficiency	NA %
MDA	200 dpmβ	MDA	287 dpmβ	MDA	###### dpmβ

Survey Type: Contamination
Building: Solar Ponds
Location: Solar Ponds
Purpose: End of Shift Survey

RWP #: 02-Riss-020

Date: 8/15/02 Time: 16:00

[redacted]

RCT: NA / NA / NA
Print name / Signature / Emp. #

PRN/REN # : NA
Comments: NA

SURVEY RESULTS

Swipe #	Location / Description Results in DPM/100sq.cm	Removable Alpha	Removable Beta	Total Alpha	Total Beta
1	Teeth	< 20	< 200	< 52	< 364
2	I/S bucket	< 20	< 200	< 52	< 364
3	I/S bucket	< 20	< 200	< 52	< 364
4	O/S bucket	< 20	< 200	< 52	< 364
5	O/S bucket	< 20	< 200	< 52	< 364
6	END OF SURVEY	NA	NA	NA	NA
7	NA	NA	NA	NA	NA
8	NA	NA	NA	NA	NA
9	NA	NA	NA	NA	NA
10	NA	NA	NA	NA	NA
11	NA	NA	NA	NA	NA
12	NA	NA	NA	NA	NA
13	NA	NA	NA	NA	NA
14	NA	NA	NA	NA	NA
15	NA	NA	NA	NA	NA
16	NA	NA	NA	NA	NA
17	NA	NA	NA	NA	NA
18	NA	NA	NA	NA	NA
19	NA	NA	NA	NA	NA
20	NA	NA	NA	NA	NA
21	NA	NA	NA	NA	NA
22	NA	NA	NA	NA	NA
23	NA	NA	NA	NA	NA
24	NA	NA	NA	NA	NA
25	NA	NA	NA	NA	NA

MAP

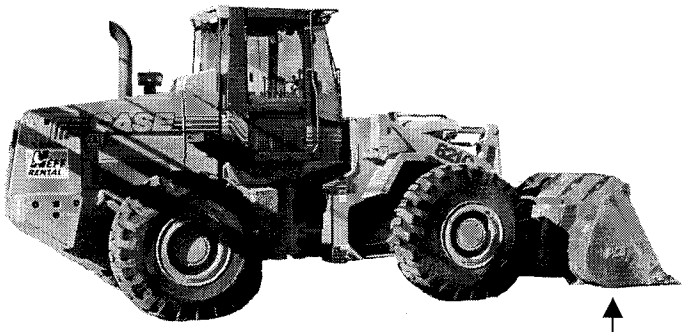

1-5

Date Reviewed: 8250L **RS Supervision:** Steve Gernatt / [signature] / [redacted]
Print Name / Signature

ROCKY FLATS ENVIRONMENTAL TECHNOLOGY SITE

INSTRUMENT DATA

Mfg.	Eberline	Mfg.	NE	Mfg.	NE
Model	SAC 4	Model	Electra	Model	Electra
Serial #	824	Serial #	2344	Serial #	3104
Cal Due	10/30/02	Cal Due	1/17/03	Cal Due	2/1/02
Bkg	0 cpmα	Bkg	0 cpmα	Bkg	6 cpmα
Efficiency	33.00 %	Efficiency	22.20 %	Efficiency	21.70 %
MDA	20 dpmα	MDA	12 dpmα	MDA	65 dpmα

Mfg.	Eberline	Mfg.	NE	Mfg.	NE
Model	BC 4	Model	Electra	Model	Electra
Serial #	704	Serial #	2344	Serial #	3104
Cal Due	10/30/02	Cal Due	1/17/03	Cal Due	2/1/02
Bkg	32.7 cpmb	Bkg	290 cpmβ	Bkg	461 cpmβ
Efficiency	25.00 %	Efficiency	31.50 %	Efficiency	30.70 %
MDA	200 dpmβ	MDA	260 dpmβ	MDA	334 dpmβ

Survey Type: Contamination- Radiation
Building: Solar Ponds
Location: Routine
Purpose: Daily

RWP #: 02-Riss-020

Date: 8/14/02 Time: 15:00

[redacted]

PRN/REN # : NA
Comments: NA

SURVEY RESULTS

Swipe #	Location / Description Results in DPM/100sq.cm	Removable Alpha	Removable Beta	Total Alpha	Total Beta
1	Connex table	< 20	< 200	<65	<334
2	Connex table	< 20	< 200	<65	<334
3	Connex table	< 20	< 200	<65	<334
4	Connex table	< 20	< 200	<65	<334
5	Trash barrel, PPE barrel	< 20	< 200	<65	<334
6	Trash barrel, PPE barrel	< 20	< 200	<65	<334
7	Trash barrel, PPE barrel	< 20	< 200	<65	<334
8	Trash barrel, PPE barrel	< 20	< 200	<65	<334
9	Floor	< 20	< 200	<65	<334
10	Floor	< 20	< 200	<65	<334
11	Floor	< 20	< 200	<65	<334
12	Floor	< 20	< 200	<65	<334
13	Shelf	< 20	< 200	<65	<334
14	Shelf	< 20	< 200	<65	<334
15	Shelf	< 20	< 200	<65	<334
16	Shelf	< 20	< 200	<65	<334
17	NA	NA	NA	NA	NA
18	NA	NA	NA	NA	NA
19	NA	NA	NA	NA	NA
20	NA	NA	NA	NA	NA
21	NA	NA	NA	NA	NA
22	NA	NA	NA	NA	NA
23	NA	NA	NA	NA	NA
24	NA	NA	NA	NA	NA
25	NA	NA	NA	NA	NA

MAP

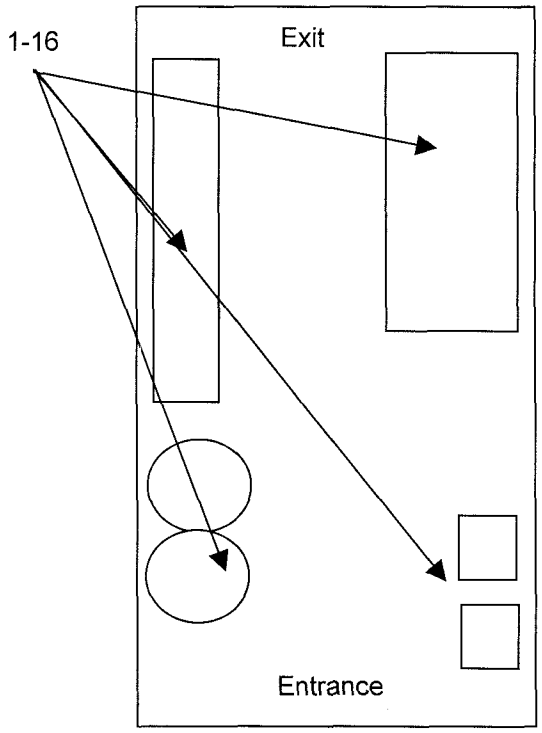

Date Reviewed: 9.9.02 **RS Supervision:** Steve Gernatt [redacted]
Print Name Signature

63

ROCKY FLATS ENVIRONMENTAL TECHNOLOGY SITE

INSTRUMENT DATA

Mfg.	Eberline	Mfg.	NE	Mfg.	NE
Model	SAC 4	Model	Electra	Model	Electra
Serial #	824	Serial #	2344	Serial #	3104
Cal Due	10/30/02	Cal Due	1/17/03	Cal Due	2/1/02
Bkg	0 cpmα	Bkg	0 cpmα	Bkg	6 cpmα
Efficiency	33.00 %	Efficiency	22.20 %	Efficiency	21.70 %
MDA	20 dpmα	MDA	12 dpmα	MDA	65 dpmα

Mfg.	Eberline	Mfg.	NE	Mfg.	NE
Model	BC 4	Model	Electra	Model	Electra
Serial #	704	Serial #	2344	Serial #	3104
Cal Due	10/30/02	Cal Due	1/17/03	Cal Due	2/1/02
Bkg	32.7 cpmb	Bkg	290 cpmβ	Bkg	461 cpmβ
Efficiency	25.00 %	Efficiency	31.50 %	Efficiency	30.70 %
MDA	200 dpmβ	MDA	260 dpmβ	MDA	334 dpmβ

Survey Type: Contamination- Radiation
Building: Solar Ponds
Location: Routine
Purpose: Daily

RWP #: 02-Riss-020

Date: 8/14/02 Time: 15:00

[redacted]

PRN/REN # : NA
Comments: NA

SURVEY RESULTS

Swipe #	Location / Description Results in DPM/100sq.cm	Removable Alpha	Removable Beta	Total Alpha	Total Beta
1	finger	<20	<200	<65	<334
2	finger	<20	<200	<65	<334
3	finger	<20	<200	<65	<334
4	finger	<20	<200	<65	<334
5	finger	<20	<200	<65	<334
6	tracks	<20	<200	<65	<334
7	tracks	<20	<200	<65	<334
8	tracks	<20	< 200	<65	<334
9	tracks	<20	< 200	<65	<334
10	tracks	<20	< 200	<65	<334
11	tracks	<20	< 200	<65	<334
12	tracks	<20	< 200	<65	<334
13	tracks	<20	< 200	<65	<334
14	tracks	<20	< 200	<65	<334
15	tracks	<20	< 200	<65	<334
16	cab	<20	<200	<65	<334
17	cab	<20	<200	<65	<334
18	NA	NA	NA	NA	NA
19	NA	NA	NA	NA	NA
20	NA	NA	NA	NA	NA
21	NA	NA	NA	NA	NA
22	NA	NA	NA	NA	NA
23	NA	NA	NA	NA	NA
24	NA	NA	NA	NA	NA
25	NA	NA	NA	NA	NA

MAP

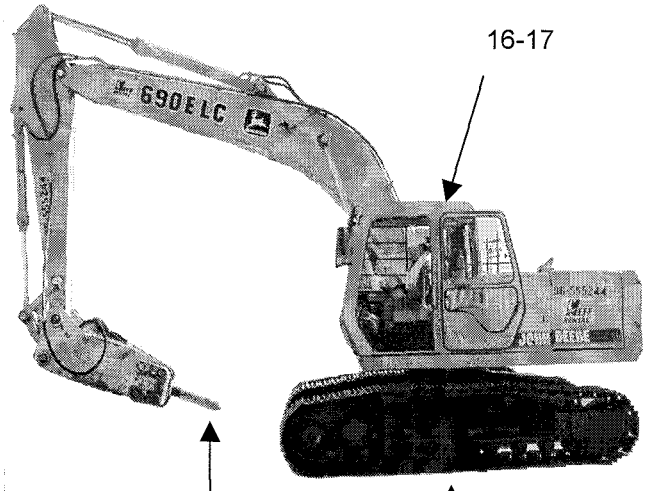

Date Reviewed: 9-9-02 **RS Supervision:** Steve Gernatt / [signature] / [redacted]
Print Name Signature

64

ROCKY FLATS ENVIRONMENTAL TECHNOLOGY SITE

INSTRUMENT DATA

Mfg.	Eberline	Mfg.	NE	Mfg.	NE
Model	SAC 4	Model	Electra	Model	Electra
Serial #	824	Serial #	2344	Serial #	3104
Cal Due	10/30/02	Cal Due	1/17/03	Cal Due	2/1/02
Bkg	0 cpmα	Bkg	0 cpmα	Bkg	6 cpmα
Efficiency	33.00 %	Efficiency	22.20 %	Efficiency	21.70 %
MDA	20 dpmα	MDA	12 dpmα	MDA	65 dpmα

Mfg.	Eberline	Mfg.	NE	Mfg.	NE
Model	BC 4	Model	Electra	Model	Electra
Serial #	704	Serial #	2344	Serial #	3104
Cal Due	10/30/02	Cal Due	3/31/01	Cal Due	2/1/02
Bkg	32.7 cpmb	Bkg	290 cpmβ	Bkg	461 cpmβ
Efficiency	25.00 %	Efficiency	31.50 %	Efficiency	30.70 %
MDA	200 dpmβ	MDA	260 dpmβ	MDA	334 dpmβ

Survey Type: Contamination- Radiation
Building: Solar Ponds
Location: Between A and B Pads
Purpose: Daily

RWP #: 02-Riss-020

Date: 8/14/02 Time: 15:00

[redacted]

PRN/REN # : NA
Comments: NA

SURVEY RESULTS

Swipe #	Location / Description Results in DPM/100sq.cm	Removable		Total	
		Alpha	Beta	Alpha	Beta
1	BUCKET	< 20	< 200	<65	<334
2	BUCKET	< 20	< 200	<65	<334
3	BUCKET	< 20	< 200	<65	<334
4	BUCKET	< 20	< 200	<65	<334
5	TRACKS	< 20	< 200	<65	<334
6	TRACKS	< 20	< 200	<65	<334
7	TRACKS	< 20	< 200	<65	<334
8	TRACKS	< 20	< 200	<65	<334
9	CAB	< 20	< 200	<65	<334
10	CAB	< 20	< 200	<65	<334
11	NA	NA	NA	NA	NA
12	NA	NA	NA	NA	NA
13	NA	NA	NA	NA	NA
14	NA	NA	NA	NA	NA
15	NA	NA	NA	NA	NA
16	NA	NA	NA	NA	NA
17	NA	NA	NA	NA	NA
18	NA	NA	NA	NA	NA
19	NA	NA	NA	NA	NA
20	NA	NA	NA	NA	NA
21	NA	NA	NA	NA	NA
22	NA	NA	NA	NA	NA
23	NA	NA	NA	NA	NA
24	NA	NA	NA	NA	NA
25	NA	NA	NA	NA	NA

MAP

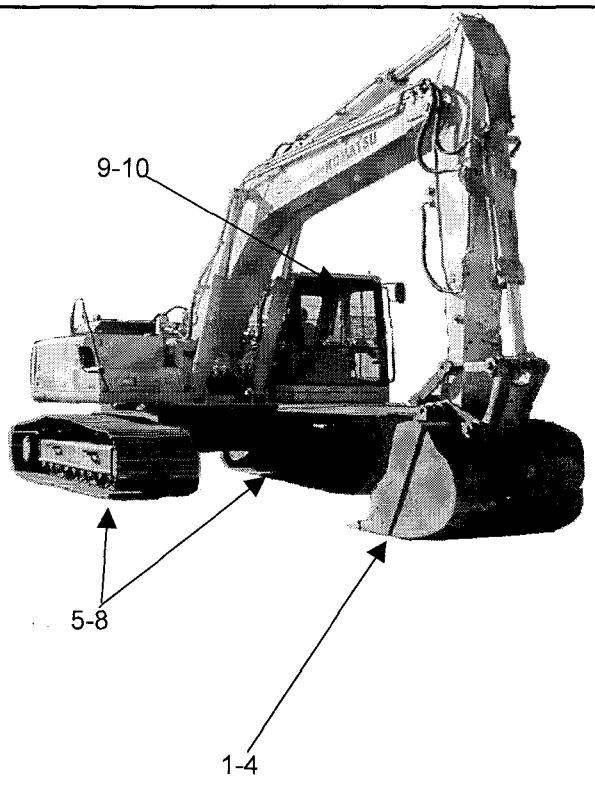

Date Reviewed: 9-9-02 **RS Supervision:** Steve Gernatt [redacted]
Print Name Signature

ROCKY FLATS ENVIRONMENTAL TECHNOLOGY SITE

INSTRUMENT DATA

	Eberline	Mfg.	NE	Mfg.	NE
Model	SAC 4	Model	Electra	Model	Electra
Serial #	824	Serial #	1260	Serial #	3104
Cal Due	10/30/02	Cal Due	08/27/02	Cal Due	2/1/02
Bkg	0.5 cpmα	Bkg	1 cpmα	Bkg	6 cpmα
Efficiency	33.00 %	Efficiency	21.20 %	Efficiency	21.70 %
MDA	20 dpmα	MDA	35 dpmα	MDA	65 dpmα
Mfg.	Eberline	Mfg.	NE	Mfg.	NE
Model	BC 4	Model	Electra	Model	Electra
Serial #	704	Serial #	1260	Serial #	3104
Cal Due	10/30/02	Cal Due	08/27/02	Cal Due	2/1/02
Bkg	35.2 cpmβ	Bkg	287 cpmβ	Bkg	461 cpmβ
Efficiency	25.00 %	Efficiency	28.40 %	Efficiency	30.70 %
MDA	200 dpmβ	MDA	287 dpmβ	MDA	334 dpmβ

Survey Type: Contamination
Building: Solar Ponds
Location: Solar Ponds
Purpose: End of Shift Survey

RWP #: 02-Riss-020

Date: 8/14/02 Time: 15:00

[redacted]

RCT: NA / NA / NA
Print name / Signature / Emp. #

PRN/REN # : NA
Comments: NA

SURVEY RESULTS

Swipe #	Location / Description Results in DPM/100sq.cm	Removable Alpha	Removable Beta	Total Alpha	Total Beta
1	Teeth	< 20	< 200	<65	<334
2	I/S bucket	< 20	< 200	<65	<334
3	I/S bucket	< 20	< 200	<65	<334
4	O/S bucket	< 20	< 200	<65	<334
5	O/S bucket	< 20	< 200	<65	<334
6	END OF SURVEY	NA	NA	NA	NA
7	NA	NA	NA	NA	NA
8	NA	NA	NA	NA	NA
9	NA	NA	NA	NA	NA
10	NA	NA	NA	NA	NA
11	NA	NA	NA	NA	NA
12	NA	NA	NA	NA	NA
13	NA	NA	NA	NA	NA
14	NA	NA	NA	NA	NA
15	NA	NA	NA	NA	NA
16	NA	NA	NA	NA	NA
17	NA	NA	NA	NA	NA
18	NA	NA	NA	NA	NA
19	NA	NA	NA	NA	NA
20	NA	NA	NA	NA	NA
21	NA	NA	NA	NA	NA
22	NA	NA	NA	NA	NA
23	NA	NA	NA	NA	NA
24	NA	NA	NA	NA	NA
25	NA	NA	NA	NA	NA

MAP

1-5

Date Reviewed: 9-9-02 **RS Supervision:** Steve Gernatt / [signature] / [redacted]
Print Name / Signature

6/6

ROCKY FLATS ENVIRONMENTAL TECHNOLOGY SITE

INSTRUMENT DATA

Mfg.	Eberline	Mfg.	NE	Mfg.	NE
Model	SAC 4	Model	Electra	Model	Electra
Serial #	824	Serial #	2344	Serial #	3104
Cal Due	10/30/02	Cal Due	01/17/03	Cal Due	02/01/02
Bkg	0 cpmα	Bkg	0 cpmα	Bkg	6 cpmα
Efficiency	33.00 %	Efficiency	22.20 %	Efficiency	21.70 %
MDA	20 dpmα	MDA	12 dpmα	MDA	65 dpmα

Mfg.	Eberline	Mfg.	NE	Mfg.	NE
Model	BC 4	Model	Electra	Model	Electra
Serial #	704	Serial #	2344	Serial #	3104
Cal Due	10/30/02	Cal Due	01/17/03	Cal Due	02/01/02
Bkg	32.7 cpmβ	Bkg	290 cpmβ	Bkg	461 cpmβ
Efficiency	25.00 %	Efficiency	31.50 %	Efficiency	30.70 %
MDA	200 dpmβ	MDA	260 dpmβ	MDA	334 dpmβ

Survey Type: Contaminaton
Building: Solar Ponds
Location: Solar Ponds
Purpose: Daily

RWP #: 02-Riss-020

Date: 8/14/02 Time: 15:00

[redacted]

PRN/REN # : NA
Comments: NA

SURVEY RESULTS

Swipe #	Location / Description Results in DPM/100sq.cm	Removable Alpha	Removable Beta	Total Alpha	Total Beta
1	blade	< 20	< 200	<65	<334
2	blade	< 20	< 200	<65	<334
3	blade	< 20	< 200	<65	<334
4	blade	< 20	< 200	<65	<334
5	blade	< 20	< 200	<65	<334
6	body	< 20	< 200	<65	<334
7	body	< 20	< 200	<65	<334
8	body	< 20	< 200	<65	<334
9	body	< 20	< 200	<65	<334
10	body	< 20	< 200	<65	<334
11	END OF SURVEY	NA	NA	NA	NA
12	NA	NA	NA	NA	NA
13	NA	NA	NA	NA	NA
14	NA	NA	NA	NA	NA
15	NA	NA	NA	NA	NA
16	NA	NA	NA	NA	NA
17	NA	NA	NA	NA	NA
18	NA	NA	NA	NA	NA
19	NA	NA	NA	NA	NA
20	NA	NA	NA	NA	NA
21	NA	NA	NA	NA	NA
22	NA	NA	NA	NA	NA
23	NA	NA	NA	NA	NA
24	NA	NA	NA	NA	NA
25	NA	NA	NA	NA	NA

MAP

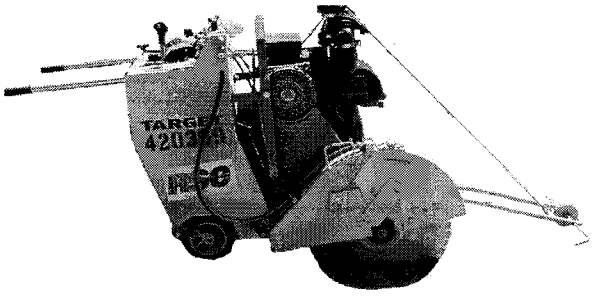

Date Reviewed: 9-5-02 **RS Supervision:** Steve Gernatt [redacted]
Print Name Signature

ROCKY FLATS ENVIRONMENTAL TECHNOLOGY SITE

INSTRUMENT DATA

Mfg.	Eberline	Mfg.	NE	Mfg.	NE
Model	SAC 4	Model	Electra	Model	Electra
Serial #	824	Serial #	2344	Serial #	3104
Cal Due	10/30/02	Cal Due	1/17/03	Cal Due	2/1/02
Bkg	0 cpmα	Bkg	0 cpmα	Bkg	6 cpmα
Efficiency	33.00 %	Efficiency	22.20 %	Efficiency	21.70 %
MDA	20 dpmα	MDA	12 dpmα	MDA	65 dpmα

Mfg.	Eberline	Mfg.	NE	Mfg.	NE
Model	BC 4	Model	Electra	Model	Electra
Serial #	704	Serial #	2344	Serial #	3104
Cal Due	10/30/02	Cal Due	1/17/03	Cal Due	2/1/02
Bkg	32.7 cpmb	Bkg	290 cpmβ	Bkg	461 cpmβ
Efficiency	25.00 %	Efficiency	31.50 %	Efficiency	30.70 %
MDA	200 dpmβ	MDA	260 dpmβ	MDA	334 dpmβ

Survey Type: Contamination- Radiation
Building: Solar Ponds
Location: Routine
Purpose: Daily

RWP #: 02-Riss-020

Date: 8/14/02 Time: 15:00

[redacted]

PRN/REN # : NA
Comments: NA

SURVEY RESULTS

Swipe #	Location / Description Results in DPM/100sq.cm	Removable		Total	
		Alpha	Beta	Alpha	Beta
1	BUCKET	<20	<200	<65	<334
2	BUCKET	<20	<200	<65	<334
3	BUCKET	<20	<200	<65	<334
4	BUCKET	<20	<200	<65	<334
5	BUCKET	<20	<200	<65	<334
6	FRONT LOADER	<20	<200	<65	<334
7	FRONT LOADER	<20	<200	<65	<334
8	FRONT LOADER	<20	< 200	<65	<334
9	FRONT LOADER	<20	< 200	<65	<334
10	FRONT LOADER	<20	< 200	<65	<334
11	NA	NA	NA	NA	NA
12	NA	NA	NA	NA	NA
13	NA	NA	NA	NA	NA
14	NA	NA	NA	NA	NA
15	NA	NA	NA	NA	NA
16	NA	NA	NA	NA	NA
17	NA	NA	NA	NA	NA
18	NA	NA	NA	NA	NA
19	NA	NA	NA	NA	NA
20	NA	NA	NA	NA	NA
21	NA	NA	NA	NA	NA
22	NA	NA	NA	NA	NA
23	NA	NA	NA	NA	NA
24	NA	NA	NA	NA	NA
25	NA	NA	NA	NA	NA

MAP

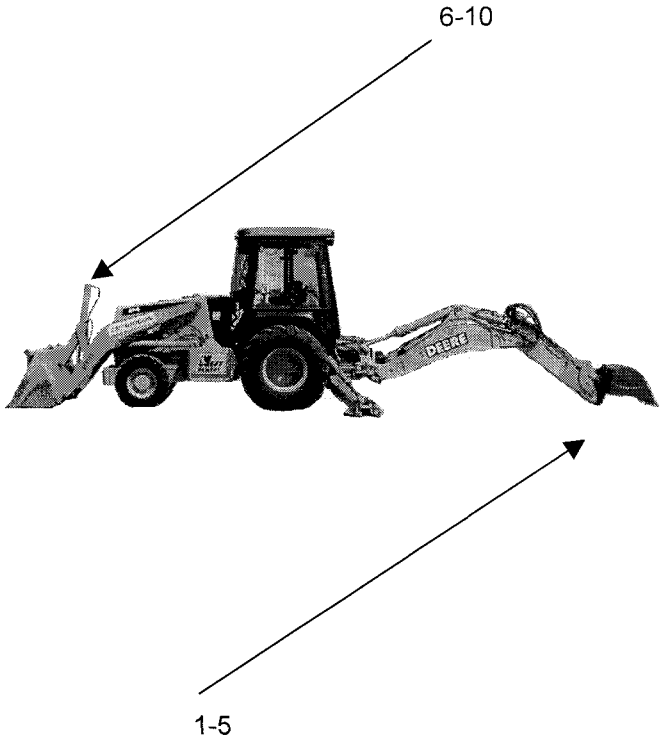

Date Reviewed: 9-9-02 **RS Supervision:** Steve Gernatt [redacted]
Print Name Signature

ROCKY FLATS ENVIRONMENTAL TECHNOLOGY SITE

INSTRUMENT DATA

Mfg.	Eberline	Mfg.	NE	Mfg.	NE
Model	SAC 4	Model	Electra	Model	Electra
Serial #	824	Serial #	2344	Serial #	3115
Cal Due	10/1/02	Cal Due	1/17/03	Cal Due	2/6/03
Bkg	0 cpmα	Bkg	0 cpmα	Bkg	0 cpmα
Efficiency	33.00 %	Efficiency	22.20 %	Efficiency	21.90 %
MDA	20 dpmα	MDA	12 dpmα	MDA	12 dpmα

Mfg.	Eberline	Mfg.	NE	Mfg.	NE
Model	BC 4	Model	Electra	Model	Electra
Serial #	704	Serial #	2344	Serial #	3115
Cal Due	10/30/02	Cal Due	1/17/03	Cal Due	2/6/03
Bkg	32.7 cpmb	Bkg	290 cpmβ	Bkg	311 cpmβ
Efficiency	25.00 %	Efficiency	31.50 %	Efficiency	30.90 %
MDA	200 dpmβ	MDA	260 dpmβ	MDA	274 dpmβ

Survey Type: Contamination- Radiation
Building: Solar Ponds
Location: North East Pond C
Purpose: Daily

RWP #: 02-Riss-020

Date: 8/14/02 Time: 17:00

[redacted]

RCT: NA / NA / NA
Print name / Signature / Emp. #

PRN/REN # : NA
Comments: 100% Scan,swipes and one minute pats.

SURVEY RESULTS

Swipe #	Location / Description Results in DPM/100sq.cm	Removable		Total	
		Alpha	Beta	Alpha	Beta
1	Retaining wall	0	140	240	1072
2	Retaining wall	0	180	90	619
3	Retaining wall	0	136	72	416
4	Retaining wall	0	112	144	1523
5	Retaining wall	0	136	114	1414
6	Retaining wall	0	108	210	1152
7	Retaining wall	0	116	48	1308
8	Retaining wall	0	164	144	1402
9	Retaining wall	0	116	78	1254
10	Retaining wall	0	156	66	1243
11	Retaining wall	0	124	120	1132
12	Retaining wall	0	136	72	644
13	Retaining wall	0	160	96	1063
14	Retaining wall	0	124	96	840
15	Retaining wall	0	120	132	696
16	Retaining wall	0	108	186	702
17	Retaining wall	0	100	72	903
18	Retaining wall	0	144	114	832
19	Retaining wall	0	176	126	842
20	Retaining wall	0	136	144	665
21	Retaining wall	0	164	210	664
22	Retaining wall	0	156	42	764
23	Retaining wall	0	180	108	896
24	Retaining wall	0	171	126	898
25	Retaining wall	0	188	120	868

MAP

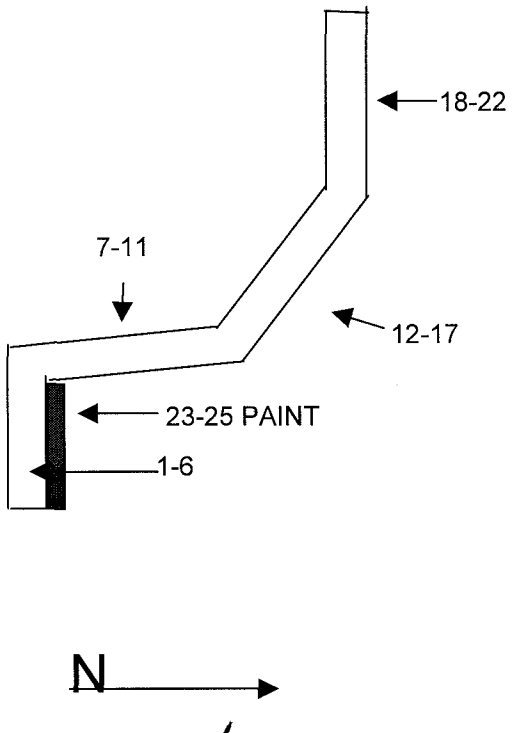

Date Reviewed: 9-9-02 **RS Supervision:** Steve Gernatt / [redacted]
Print Name / Signature

69

ROCKY FLATS ENVIRONMENTAL TECHNOLOGY SITE

INSTRUMENT DATA

Mfg.	Eberline	Mfg.	Eberline	Mfg.	NE Electra
Model	SAC-4	Model	BC-4	Model	DP-6
Serial #	824	Serial #	704	Serial #	3250
Cal Due	10/1/02	Cal Due	10/30/02	Cal Due	1/10/03
Bkg	0 cpmα	Bkg	32.7 cpmβ	Bkg	4 cpmα
Eff.	33 %	Eff.	25 %	Eff.	22.8 %
MDA	20 dpmα	MDA	200 dpmβ	MDA	53 dpmα

Mfg.	Eberline	Mfg.	Eberline	Mfg.	NE Electra
Model	SAC-4	Model	BC-4	Model	DP-6
Serial #	NA	Serial #	NA	Serial #	3250
Cal Due		Cal Due		Cal Due	1/10/03
Bkg	cpmα	Bkg	cpmβ	Bkg	441 cpmβ
Eff.	%	Eff.	%	Eff.	31.2 %
MDA	NA dpmα	MDA	NA dpmβ	MDA	322 dpmβ

Survey Type: Contamination
Building: 788
Location: North west loading dock slab
Purpose: SCO

RWP #: 02-RISS-020

Date: 8/14/02 Time: 1100

[redacted]

RCT:	NA	NA	NA
	Print name	Signature	Emp. #

PRN/REN # : NA

Comments: Scanned accessible areas of the concrete pad on the northwest corner of former 788 bldg. A pat survey was performed on the areas of the highest counts. SCO survey # .

SURVEY RESULTS

		ALPHA			BETA		
Swipe #	LOCATION	Swipe dpm/100cm2	Direct dpm/100cm2	Wipe dpm/wipe	Swipe dpm/100cm2	Direct dpm/100cm2	Wipe dpm/wipe
1	North west pad	0	18	NA	128	705	NA
2	North west pad	0	26		148	801	
3	North west pad	0	22		116	713	
4	North west pad	6	31		100	577	
5	North west pad	3	35		140	250	
6	North west pad	3	4		88	173	
7	North west pad	0	0		140	224	
8	North west pad	0	0		124	567	
9	North west pad	0	0		168	410	
10	North west pad	0	26		116	365	
11	North west pad	0	31		164	1186	
12	North west pad	0	44		116	702	
13	North west pad	0	18		100	609	
14	North west pad	0	0		148	202	
15	North west pad	0	31		172	263	
16	North west pad	0	0		120	474	
17	North west pad	0	22		148	713	
18	North west pad	0	26		116	737	
19	North west pad	0	4		128	994	
20	North west pad	0	0	NA	108	901	NA

Date Reviewed: 8/15/02 **RS Supervision:** [redacted]
Signature

Swipe	LOCATION	Swipe	Direct	Wipe	BETA Swipe	BETA Direct	BETA Wipe
#		dpm/100cm2	dpm/100cm2	dpm/wipe	dpm/100cm2	dpm/100cm2	dpm/wipe
21	North west pad	0	0	NA	140	923	NA
22	North west pad	0	9		128	933	
23	North west pad	0	0		100	202	
24	North west pad	0	4		100	218	
25	North west pad	0	18		172	644	
26	North west pad	0	4		148	705	
27	North west pad	0	0		116	1010	
28	North west pad	0	4		172	724	
29	North west pad	0	0		116	1285	
30	North west pad	0	0		168	1051	
31	North west pad	0	4		172	250	
32	North west pad	0	4		116	292	
33	North west pad	0	4		148	346	
34	North west pad	0	9		120	250	
35	North west pad	0	4		116	731	
36	North west pad	0	0		140	619	
NA	NA	NA	NA		NA	NA	
NA	NA	NA	NA	NA	NA	NA	NA

ROCKY FLATS ENVIRONMENTAL TECHNOLOGY SITE

Drawing Showing Survey Points

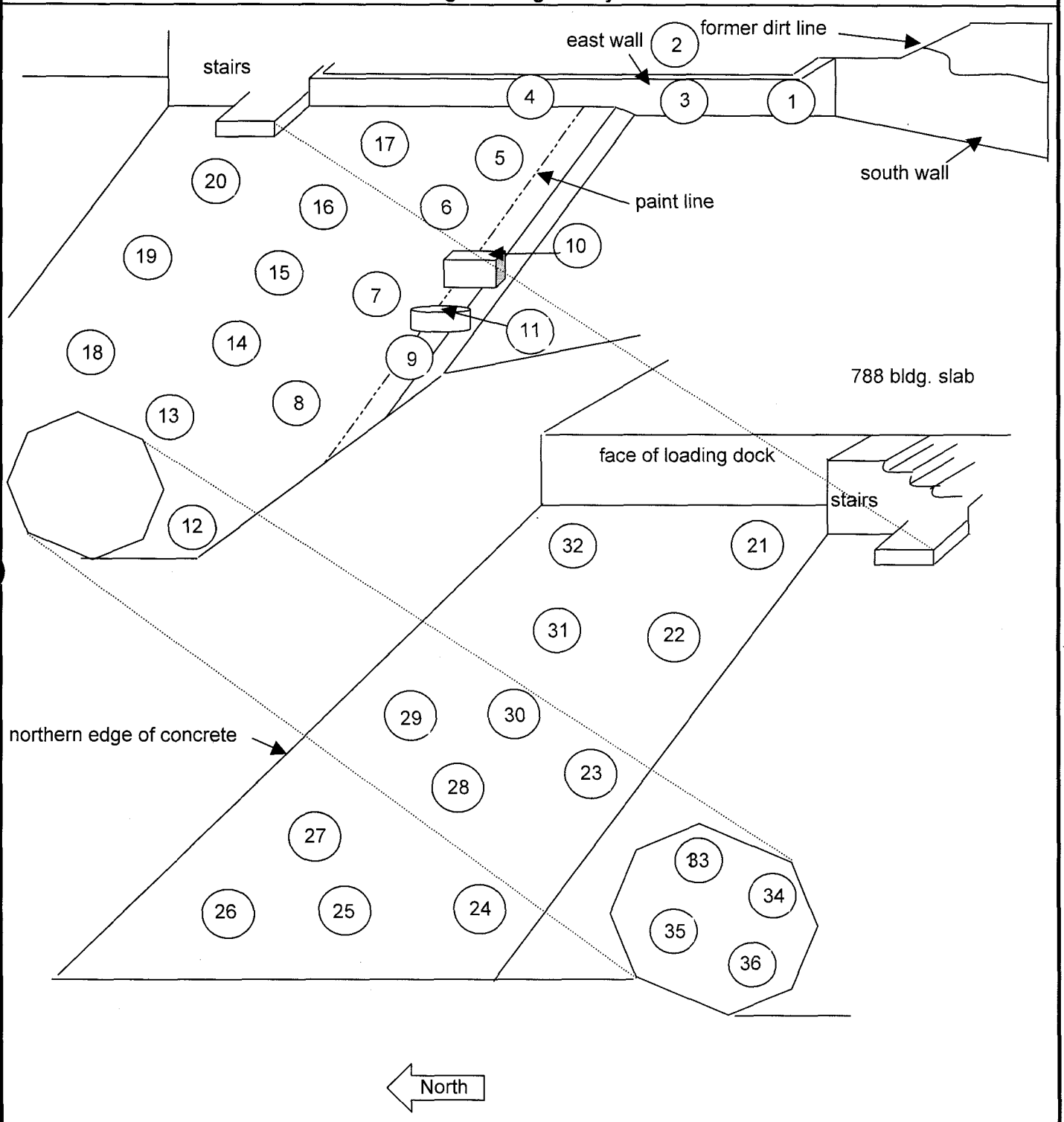

72

ROCKY FLATS ENVIRONMENTAL TECHNOLOGY SITE

INSTRUMENT DATA

Mfg.	Eberline	Mfg.	Eberline	Mfg.	NE Electra
Model	SAC-4	Model	SAC-4	Model	DP-6
Serial #	824	Serial #	NA	Serial #	3104
Cal Due	10/1/02	Cal Due		Cal Due	2/1/03
Bkg	0 cpmα	Bkg	cpmα	Bkg	6 cpmα
Eff.	33 %	Eff.	%	Eff.	21.7 %
MDA	20 dpmα	MDA	NA dpmα	MDA	65 dpmα

Mfg.	Eberline	Mfg.	Eberline	Mfg.	NE Electra
Model	BC-4	Model	BC-4	Model	DP-6
Serial #	704	Serial #	NA	Serial #	3104
Cal Due	10/30/02	Cal Due		Cal Due	2/1/03
Bkg	32.7 cpmβ	Bkg	cpmβ	Bkg	461 cpmβ
Eff.	25 %	Eff.	%	Eff.	30.7 %
MDA	200 dpmβ	MDA	NA dpmβ	MDA	334 dpmβ

Survey Type: Contamination

Building: 788 Solar Ponds

Location: Pump pad, west side of the B-2 pond

Purpose: Pre demolition

RWP #: 02-RISS-020

Date: 8/14/02 Time: 1100

[redacted]

PRN/REN # : NA

Comments: SCO survey #

SURVEY RESULTS

Swipe #	LOCATION	ALPHA Swipe dpm/100cm2	ALPHA Direct dpm/100cm2	ALPHA Wipe dpm/wipe	BETA Swipe dpm/100cm2	BETA Direct dpm/100cm2	BETA Wipe dpm/wipe
1	concrete pad	0	60	NA	4	573	NA
2	concrete pad	0	92		20	557	
3	concrete pad	6	74		0	736	
4	concrete pad	3	23		36	511	
5	concrete pad	3	106		0	410	
6	concrete pad	0	52		16	769	
7	concrete pad	0	28		2	8	
8	concrete pad	3	46		0	814	
9	concrete pad	6	37		0	619	
10	concrete pad	3	65		4	524	
11	berm	3	60		34	8	
12	berm	3	78		0	655	
13	berm	0	52		12	645	
14	berm	6	83		0	746	
15	berm	0	60		0	655	
NA	NA	NA	NA		NA	NA	
NA	NA	NA	NA	NA	NA	NA	NA

Date Reviewed: 9-9-02 **RS Supervision:** S Gibson / [signature]

Print Name Signature

[redacted]

73

ROCKY FLATS ENVIRONMENTAL TECHNOLOGY SITE

Drawing Showing Survey Points

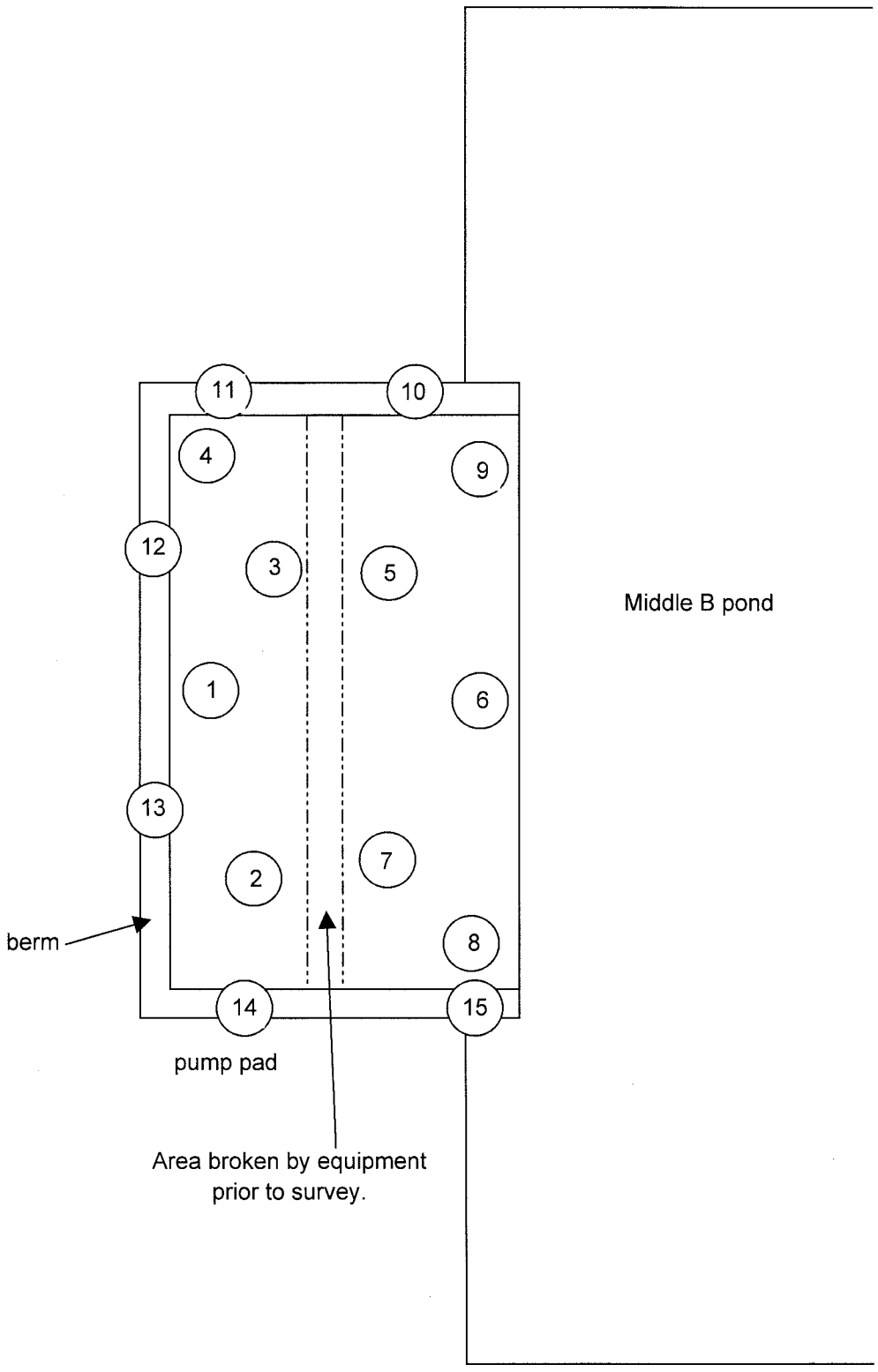

ROCKY FLATS ENVIRONMENTAL TECHNOLOGY SITE

INSTRUMENT DATA

Mfg.	Eberline	Mfg.	NE	Mfg.	NE
Model	SAC 4	Model	Electra	Model	Electra
Serial #	824	Serial #	2344	Serial #	1260
Cal Due	10/30/02	Cal Due	1/17/03	Cal Due	8/27/02
Bkg	0.1 cpmα	Bkg	0 cpmα	Bkg	2 cpmα
Efficiency	33.00 %	Efficiency	22.20 %	Efficiency	21.20 %
MDA	20 dpmα	MDA	12 dpmα	MDA	44 dpmα

Mfg.	Eberline	Mfg.	NE	Mfg.	NE
Model	BC 4	Model	Electra	Model	Electra
Serial #	704	Serial #	2344	Serial #	1260
Cal Due	10/30/02	Cal Due	1/17/03	Cal Due	8/27/02
Bkg	33.6 cpmb	Bkg	395 cpmβ	Bkg	324 cpmβ
Efficiency	25.00 %	Efficiency	31.50 %	Efficiency	28.40 %
MDA	200 dpmβ	MDA	302 dpmβ	MDA	304 dpmβ

Survey Type: Contamination- Radiation
Building: Solar Ponds
Location: Routine
Purpose: Daily

RWP #: 02-Riss-020

Date: 8/13/02 Time: 0:00

[redacted]

RCT: NA / NA / NA
Print name Signature Emp. #

PRN/REN # : NA
Comments: NA

SURVEY RESULTS

Swipe #	Location / Description Results in DPM/100sq.cm	Removable		Total	
		Alpha	Beta	Alpha	Beta
1	Connex table	< 20	< 200	<44	<304
2	Connex table	< 20	< 200	<44	<304
3	Connex table	< 20	< 200	<44	<304
4	Connex table	< 20	< 200	<44	<304
5	Trash barrel, PPE barrel	< 20	< 200	<44	<304
6	Trash barrel, PPE barrel	< 20	< 200	<44	<304
7	Trash barrel, PPE barrel	< 20	< 200	<44	<304
8	Trash barrel, PPE barrel	< 20	< 200	<44	<304
9	Floor	< 20	< 200	<44	<304
10	Floor	< 20	< 200	<44	<304
11	Floor	< 20	< 200	<44	<304
12	Floor	< 20	< 200	<44	<304
13	Shelf	< 20	< 200	<44	<304
14	Shelf	< 20	< 200	<44	<304
15	Shelf	< 20	< 200	<44	<304
16	Shelf	< 20	< 200	<44	<304
17	NA	NA	NA	NA	NA
18	NA	NA	NA	NA	NA
19	NA	NA	NA	NA	NA
20	NA	NA	NA	NA	NA
21	NA	NA	NA	NA	NA
22	NA	NA	NA	NA	NA
23	NA	NA	NA	NA	NA
24	NA	NA	NA	NA	NA
25	NA	NA	NA	NA	NA

MAP

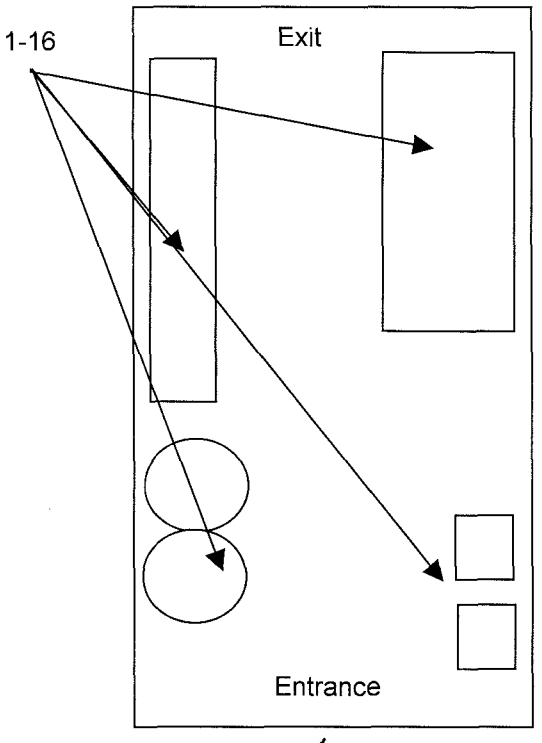

Date Reviewed: 8/30/02 **RS Supervision:** Steve Gernatt / [redacted]
Print Name Signature

75

ROCKY FLATS ENVIRONMENTAL TECHNOLOGY SITE

INSTRUMENT DATA

Mfg.	Eberline	Mfg.	NE	Mfg.	NE
Model	SAC 4	Model	Electra	Model	Electra
Serial #	824	Serial #	2344	Serial #	1260
Cal Due	10/30/02	Cal Due	1/17/03	Cal Due	8/27/02
Bkg	0.1 cpmα	Bkg	0 cpmα	Bkg	2 cpmα
Efficiency	33.00 %	Efficiency	22.20 %	Efficiency	21.20 %
MDA	20 dpmα	MDA	12 dpmα	MDA	44 dpmα

Mfg.	Eberline	Mfg.	NE	Mfg.	NE
Model	BC 4	Model	Electra	Model	Electra
Serial #	704	Serial #	2344	Serial #	1260
Cal Due	10/30/02	Cal Due	3/31/01	Cal Due	8/27/02
Bkg	33.6 cpmb	Bkg	395 cpmβ	Bkg	324 cpmβ
Efficiency	25.00 %	Efficiency	31.50 %	Efficiency	28.40 %
MDA	200 dpmβ	MDA	302 dpmβ	MDA	304 dpmβ

Survey Type: Contamination- Radiation
Building: Solar Ponds
Location: Between A and B Pads
Purpose: Daily

RWP #: 02-Riss-020

Date: 8/13/02 Time: 0:00

[redacted]

PRN/REN # : NA
Comments: NA

SURVEY RESULTS

Swipe #	Location / Description Results in DPM/100sq.cm	Removable Alpha	Removable Beta	Total Alpha	Total Beta
1	BUCKET	< 20	< 200	<44	<304
2	BUCKET	< 20	< 200	<44	<304
3	BUCKET	< 20	< 200	<44	<304
4	BUCKET	< 20	< 200	<44	<304
5	TRACKS	< 20	< 200	<44	<304
6	TRACKS	< 20	< 200	<44	<304
7	TRACKS	< 20	< 200	<44	<304
8	TRACKS	< 20	< 200	<44	<304
9	CAB	< 20	< 200	<44	<304
10	CAB	< 20	< 200	<44	<304
11	NA	NA	NA	NA	NA
12	NA	NA	NA	NA	NA
13	NA	NA	NA	NA	NA
14	NA	NA	NA	NA	NA
15	NA	NA	NA	NA	NA
16	NA	NA	NA	NA	NA
17	NA	NA	NA	NA	NA
18	NA	NA	NA	NA	NA
19	NA	NA	NA	NA	NA
20	NA	NA	NA	NA	NA
21	NA	NA	NA	NA	NA
22	NA	NA	NA	NA	NA
23	NA	NA	NA	NA	NA
24	NA	NA	NA	NA	NA
25	NA	NA	NA	NA	NA

MAP

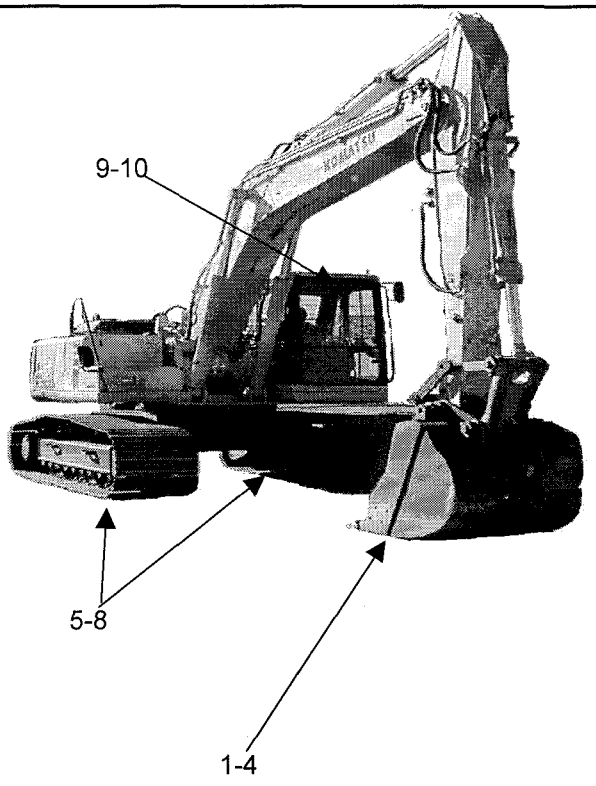

Date Reviewed: 8-26-02 **RS Supervision:** Steve Gernatt [redacted]
Print Name Signature

ROCKY FLATS ENVIRONMENTAL TECHNOLOGY SITE

INSTRUMENT DATA

Mfg.	Eberline	Mfg.	NE	Mfg.	NE
Model	SAC 4	Model	Electra	Model	Electra
Serial #	824	Serial #	2344	Serial #	1260
Cal Due	10/30/02	Cal Due	01/17/03	Cal Due	08/27/02
Bkg	0.1 cpmα	Bkg	0 cpmα	Bkg	2 cpmα
Efficiency	33.00 %	Efficiency	22.20 %	Efficiency	21.20 %
MDA	20 dpmα	MDA	12 dpmα	MDA	44 dpmα

Mfg.	Eberline	Mfg.	NE	Mfg.	NE
Model	BC 4	Model	Electra	Model	Electra
Serial #	704	Serial #	2344	Serial #	1260
Cal Due	10/30/02	Cal Due	01/17/03	Cal Due	08/27/02
Bkg	33.6 cpmβ	Bkg	395 cpmβ	Bkg	324 cpmβ
Efficiency	25.00 %	Efficiency	31.50 %	Efficiency	28.40 %
MDA	200 dpmβ	MDA	302 dpmβ	MDA	304 dpmβ

Survey Type: Contaminaton
Building: Solar Ponds
Location: Solar Ponds
Purpose: Daily

RWP #: 02-Riss-020

Date: 8/13/02 Time: 0:00

[redacted]

Print name Signature Emp. #

PRN/REN # : NA
Comments: NA

SURVEY RESULTS

Swipe #	Location / Description Results in DPM/100sq.cm	Removable		Total	
		Alpha	Beta	Alpha	Beta
1	blade	< 20	< 200	<44	<304
2	blade	< 20	< 200	<44	<304
3	blade	< 20	< 200	<44	<304
4	blade	< 20	< 200	<44	<304
5	blade	< 20	< 200	<44	<304
6	body	< 20	< 200	<44	<304
7	body	< 20	< 200	<44	<304
8	body	< 20	< 200	<44	<304
9	body	< 20	< 200	<44	<304
10	body	< 20	< 200	<44	<304
11	END OF SURVEY	NA	NA	NA	NA
12	NA	NA	NA	NA	NA
13	NA	NA	NA	NA	NA
14	NA	NA	NA	NA	NA
15	NA	NA	NA	NA	NA
16	NA	NA	NA	NA	NA
17	NA	NA	NA	NA	NA
18	NA	NA	NA	NA	NA
19	NA	NA	NA	NA	NA
20	NA	NA	NA	NA	NA
21	NA	NA	NA	NA	NA
22	NA	NA	NA	NA	NA
23	NA	NA	NA	NA	NA
24	NA	NA	NA	NA	NA
25	NA	NA	NA	NA	NA

MAP

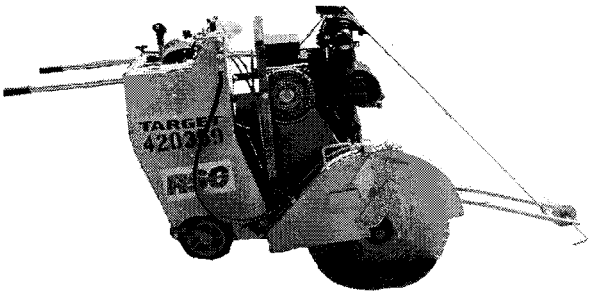

Date Reviewed: 8-26-02 **RS Supervision:** Steve Gernatt [redacted]
Print Name Signature

ROCKY FLATS ENVIRONMENTAL TECHNOLOGY SITE

INSTRUMENT DATA

Mfg.	Eberline	Mfg.	NE	Mfg.	NE
Model	SAC 4	Model	Electra	Model	Electra
Serial #	824	Serial #	2344	Serial #	1260
Cal Due	10/30/02	Cal Due	1/17/03	Cal Due	8/27/02
Bkg	0.1 cpmα	Bkg	0 cpmα	Bkg	2 cpmα
Efficiency	33.00 %	Efficiency	22.20 %	Efficiency	21.20 %
MDA	20 dpmα	MDA	12 dpmα	MDA	44 dpmα

Mfg.	Eberline	Mfg.	NE	Mfg.	NE
Model	BC 4	Model	Electra	Model	Electra
Serial #	704	Serial #	2344	Serial #	1260
Cal Due	10/30/02	Cal Due	1/17/03	Cal Due	8/27/02
Bkg	33.6 cpmb	Bkg	395 cpmβ	Bkg	324 cpmβ
Efficiency	25.00 %	Efficiency	31.50 %	Efficiency	28.40 %
MDA	200 dpmβ	MDA	302 dpmβ	MDA	304 dpmβ

Survey Type: Contamination- Radiation
Building: Solar Ponds
Location: Routine
Purpose: Daily

RWP #: 02-Riss-020

Date: 8/13/02 Time: 0:00

[redacted]

PRN/REN # : NA
Comments: NA

SURVEY RESULTS

Swipe #	Location / Description Results in DPM/100sq.cm	Removable Alpha	Removable Beta	Total Alpha	Total Beta
1	finger	<20	<200	<44	<304
2	finger	<20	<200	<44	<304
3	finger	<20	<200	<44	<304
4	finger	<20	<200	<44	<304
5	finger	<20	<200	<44	<304
6	tracks	<20	<200	<44	<304
7	tracks	<20	<200	<44	<304
8	tracks	<20	< 200	<44	<304
9	tracks	<20	< 200	<44	<304
10	tracks	<20	< 200	<44	<304
11	tracks	<20	< 200	<44	<304
12	tracks	<20	< 200	<44	<304
13	tracks	<20	< 200	<44	<304
14	tracks	<20	< 200	<44	<304
15	tracks	<20	< 200	<44	<304
16	cab	<20	<200	<44	<304
17	cab	<20	<200	<44	<304
18	NA	NA	NA	NA	NA
19	NA	NA	NA	NA	NA
20	NA	NA	NA	NA	NA
21	NA	NA	NA	NA	NA
22	NA	NA	NA	NA	NA
23	NA	NA	NA	NA	NA
24	NA	NA	NA	NA	NA
25	NA	NA	NA	NA	NA

MAP

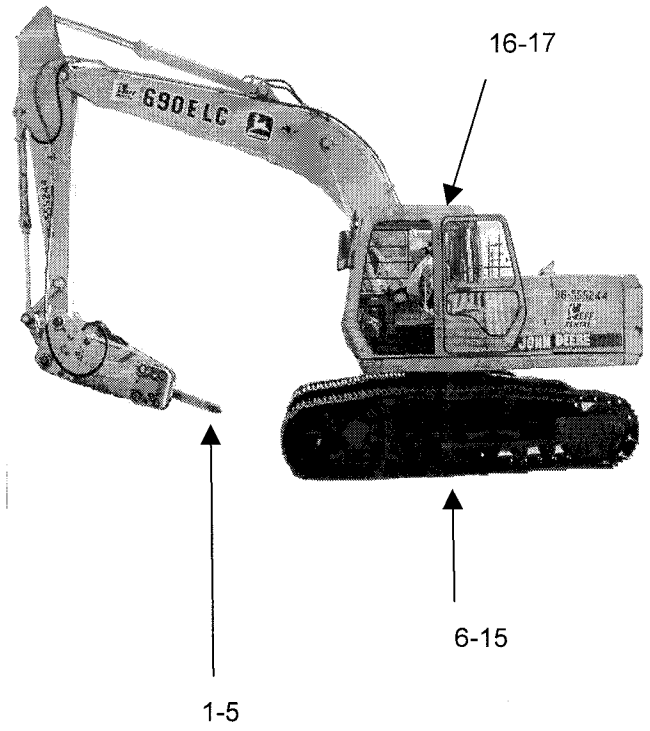

Date Reviewed: 9-9-02 **RS Supervision:** Steve Gernatt / [signature] / [redacted]
Print Name Signature

ROCKY FLATS ENVIRONMENTAL TECHNOLOGY SITE

INSTRUMENT DATA

Mfg.	Eberline	Mfg.	NE	Mfg.	NE
Model	SAC 4	Model	Electra	Model	Electra
Serial #	824	Serial #	2344	Serial #	1260
Cal Due	10/30/02	Cal Due	1/17/03	Cal Due	8/27/02
Bkg	0.1 cpmα	Bkg	0 cpmα	Bkg	2 cpmα
Efficiency	33.00 %	Efficiency	22.20 %	Efficiency	21.20 %
MDA	20 dpmα	MDA	12 dpmα	MDA	44 dpmα

Mfg.	Eberline	Mfg.	NE	Mfg.	NE
Model	BC 4	Model	Electra	Model	Electra
Serial #	704	Serial #	2344	Serial #	1260
Cal Due	10/30/02	Cal Due	1/17/03	Cal Due	8/27/02
Bkg	33.6 cpmb	Bkg	395 cpmβ	Bkg	324 cpmβ
Efficiency	25.00 %	Efficiency	31.50 %	Efficiency	28.40 %
MDA	200 dpmβ	MDA	302 dpmβ	MDA	304 dpmβ

Survey Type: Contamination- Radiation
Building: Solar Ponds
Location: Between A and B Pads
Purpose: Daily
RWP #: 02-Riss-020
Date: 8/13/02 Time: 0:00

[redacted]

RCT: NA / NA / NA
Print name Signature Emp. #

PRN/REN # : NA
Comments: 788 pad secondary cuts.

SURVEY RESULTS

Swipe #	Location / Description Results in DPM/100sq.cm	Removable		Total	
		Alpha	Beta	Alpha	Beta
1	Concrete Pad	<20	<200	<44	<304
2	Concrete Pad	<20	<200	<44	<304
3	Concrete Pad	<20	<200	<44	<304
4	Concrete Pad	<20	<200	<44	<304
5	Concrete Pad	<20	<200	<44	<304
6	Concrete Pad	<20	<200	<44	<304
7	Concrete Pad	<20	<200	<44	<304
8	Concrete Pad	<20	< 200	<44	<304
9	Concrete Pad	<20	< 200	<44	<304
10	Concrete Pad	<20	< 200	<44	<304
11	Concrete Pad	<20	< 200	<44	<304
12	Concrete Pad	<20	< 200	<44	<304
13	Concrete Pad	<20	< 200	<44	<304
14	Concrete Pad	<20	< 200	<44	<304
15	Concrete Pad	<20	< 200	<44	<304
16	Concrete Pad	<20	<200	<44	<304
17	Concrete Pad	<20	<200	<44	<304
18	Concrete Pad	<20	<200	<44	<304
19	Concrete Pad	<20	<200	<44	<304
20	Concrete Pad	<20	<200	<44	<304
21	NA	NA	NA	NA	NA
22	NA	NA	NA	NA	NA
23	NA	NA	NA	NA	NA
24	NA	NA	NA	NA	NA
25	NA	NA	NA	NA	NA

MAP

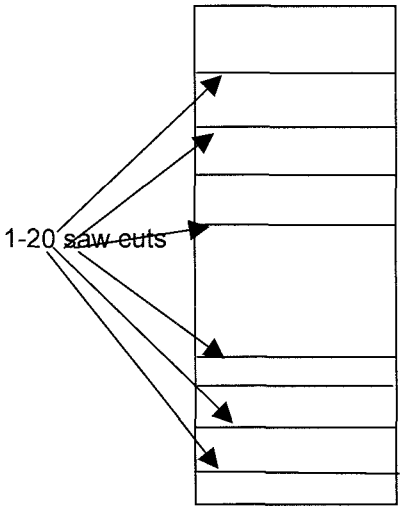

Date Reviewed: 8/20/02 **RS Supervision:** Steve Gernatt / [signature] / [redacted]
Print Name Signature

ROCKY FLATS ENVIRONMENTAL TECHNOLOGY SITE

INSTRUMENT DATA

Mfg.	Ludlum	Mfg.	NA	Mfg.	NE Electra
Model	2929	Model		Model	DP-6
Serial #	176090	Serial #		Serial #	2394
Cal Due	11/30/02	Cal Due		Cal Due	9/26/02
Bkg.	0.6 cpm α	Bkg.		Bkg.	4 cpm α
Efficiency	34.8 %	Efficiency		Efficiency	22.1 %
MDA	18 dpm α	MDA	NA	MDA	54 dpm α
Mfg.	Ludlum	Mfg.	NA	Mfg.	NE Electra
Model	2929	Model		Model	DP-6
Serial #	176090	Serial #		Serial #	2394
Cal Due	11/30/02	Cal Due		Cal Due	9/26/02
Bkg.	87.9 cpm β	Bkg.		Bkg.	680 cpm β
Efficiency	39.5 %	Efficiency		Efficiency	29.8 %
MDA	205 dpm α	MDA	NA	MDA	416 dpm β

Survey type: Contamination
Building: NA
Location: East of solar ponds
Purpose: Well Removal
RWP #: NA
Date: 8/13/02 Time: 1300
[redacted]
RCT: NA / NA / NA
Print name Signature Emp. #

PRN/REN # : NA
Comments: Performed swipe, scan, and 60 second PAT survey on items listed below following removal from the ground.

SURVEY RESULTS

Swipe #	LOCATION/DESCRIPTION	ALPHA			BETA		
		Swipe	Direct	Wipe	Swipe	Direct	Wipe
		dpm/100cm2	dpm/100cm2	dpm/wipe	dpm/100cm2	dpm/100cm2	dpm/wipe
1	Pole	<18	<54	NA	<205	<416	NA
2	Pole	<18	<54		<205	<416	
3	Concrete slab	<18	<54		<205	<416	
4	Concrete slab	<18	<54		<205	<416	
5	Concrete slab	<18	<54		<205	<416	
6	Well 2786	<18	<54		<205	<416	
7	Well 26095	<18	<54		<205	<416	
NA	NA	NA	NA		NA	NA	
NA	NA	NA	NA	NA	NA	NA	NA

Date Reviewed: 8-13-02 **RS Supervision:** Slemmons / [redacted]
Print Name Signature

80

ROCKY FLATS ENVIRONMENTAL TECHNOLOGY SITE

INSTRUMENT DATA

Mfg.	Eberline	Mfg.	NE	Mfg.	NE
Model	SAC 4	Model	Electra	Model	Electra
Serial #	824	Serial #	2344	Serial #	1260
Cal Due	10/30/02	Cal Due	1/17/03	Cal Due	8/27/02
Bkg	0.1 cpmα	Bkg	2 cpmα	Bkg	6 cpmα
Efficiency	33.00 %	Efficiency	22.20 %	Efficiency	21.20 %
MDA	20 dpmα	MDA	42 dpmα	MDA	67 dpmα

Mfg.	Eberline	Mfg.	NE	Mfg.	NE
Model	BC 4	Model	Electra	Model	Electra
Serial #	704	Serial #	2344	Serial #	1260
Cal Due	10/30/02	Cal Due	3/31/01	Cal Due	8/27/02
Bkg	33.1 cpmb	Bkg	408 cpmβ	Bkg	295 cpmβ
Efficiency	25.00 %	Efficiency	31.50 %	Efficiency	28.40 %
MDA	200 dpmβ	MDA	307 dpmβ	MDA	291 dpmβ

Survey Type: Contamination- Radiation
Building: Solar Ponds
Location: Between A and B Pads
Purpose: Daily
RWP #: 02-Riss-020
Date: 8/12/02 Time: 0:00
RCT: NA / NA / NA
Print name | Signature | Emp. #

[redacted]

PRN/REN # : NA
Comments: NA

SURVEY RESULTS

Swipe #	Location / Description Results in DPM/100sq.cm	Removable Alpha	Removable Beta	Total Alpha	Total Beta
1	BUCKET	< 20	< 200	<67	<307
2	BUCKET	< 20	< 200	<67	<307
3	BUCKET	< 20	< 200	<67	<307
4	BUCKET	< 20	< 200	<67	<307
5	TRACKS	< 20	< 200	<67	<307
6	TRACKS	< 20	< 200	<67	<307
7	TRACKS	< 20	< 200	<67	<307
8	TRACKS	< 20	< 200	<67	<307
9	CAB	< 20	< 200	<67	<307
10	CAB	< 20	< 200	<67	<307
11	NA	NA	NA	NA	NA
12	NA	NA	NA	NA	NA
13	NA	NA	NA	NA	NA
14	NA	NA	NA	NA	NA
15	NA	NA	NA	NA	NA
16	NA	NA	NA	NA	NA
17	NA	NA	NA	NA	NA
18	NA	NA	NA	NA	NA
19	NA	NA	NA	NA	NA
20	NA	NA	NA	NA	NA
21	NA	NA	NA	NA	NA
22	NA	NA	NA	NA	NA
23	NA	NA	NA	NA	NA
24	NA	NA	NA	NA	NA
25	NA	NA	NA	NA	NA

MAP

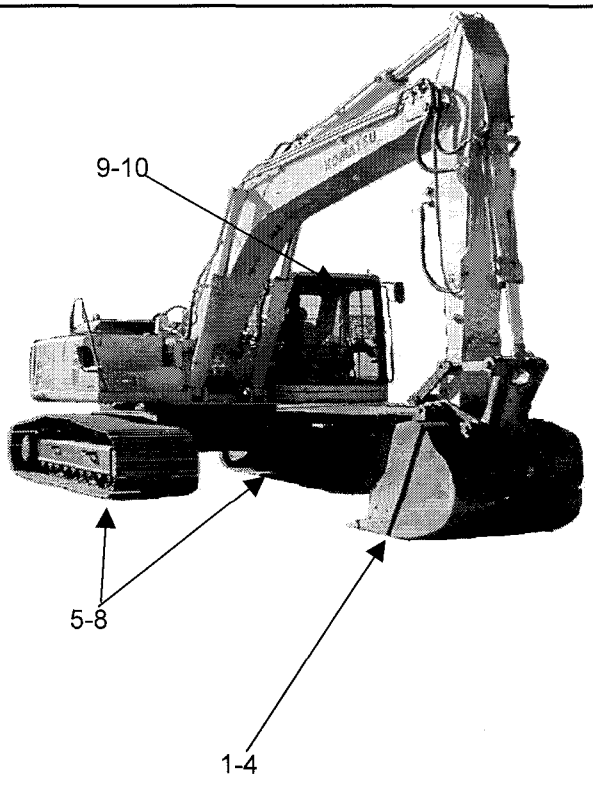

Date Reviewed: 8/30/02 **RS Supervision:** Steve Gernatt / [signature] /
Print Name | Signature

[redacted]

81

ROCKY FLATS ENVIRONMENTAL TECHNOLOGY SITE

INSTRUMENT DATA

Mfg.	Eberline	Mfg.	NE	Mfg.	NE
Model	SAC 4	Model	Electra	Model	Electra
Serial #	824	Serial #	2344	Serial #	1260
Cal Due	10/30/02	Cal Due	01/17/03	Cal Due	08/27/02
Bkg	0.1 cpmα	Bkg	2 cpmα	Bkg	6 cpmα
Efficiency	33.00 %	Efficiency	22.20 %	Efficiency	21.20 %
MDA	20 dpmα	MDA	42 dpmα	MDA	67 dpmα

Mfg.	Eberline	Mfg.	NE	Mfg.	NE
Model	BC 4	Model	Electra	Model	Electra
Serial #	704	Serial #	2344	Serial #	1260
Cal Due	10/30/02	Cal Due	01/17/03	Cal Due	08/27/02
Bkg	33.1 cpmβ	Bkg	408 cpmβ	Bkg	295 cpmβ
Efficiency	25.00 %	Efficiency	31.50 %	Efficiency	28.40 %
MDA	200 dpmβ	MDA	307 dpmβ	MDA	291 dpmβ

Survey Type: Contaminaton
Building: Solar Ponds
Location: Solar Ponds
Purpose: Daily

RWP #: 02-Riss-020

Date: 8/12/02 Time: 0:00

[redacted]

RCT: NA / NA / NA
Print name Signature Emp. #

PRN/REN # : NA
Comments: NA

SURVEY RESULTS

Swipe #	Location / Description Results in DPM/100sq.cm	Removable		Total	
		Alpha	Beta	Alpha	Beta
1	blade	< 20	< 200	<67	<307
2	blade	< 20	< 200	<67	<307
3	blade	< 20	< 200	<67	<307
4	blade	< 20	< 200	<67	<307
5	blade	< 20	< 200	<67	<307
6	body	< 20	< 200	<67	<307
7	body	< 20	< 200	<67	<307
8	body	< 20	< 200	<67	<307
9	body	< 20	< 200	<67	<307
10	body	< 20	< 200	<67	<307
11	END OF SURVEY	NA	NA	NA	NA
12	NA	NA	NA	NA	NA
13	NA	NA	NA	NA	NA
14	NA	NA	NA	NA	NA
15	NA	NA	NA	NA	NA
16	NA	NA	NA	NA	NA
17	NA	NA	NA	NA	NA
18	NA	NA	NA	NA	NA
19	NA	NA	NA	NA	NA
20	NA	NA	NA	NA	NA
21	NA	NA	NA	NA	NA
22	NA	NA	NA	NA	NA
23	NA	NA	NA	NA	NA
24	NA	NA	NA	NA	NA
25	NA	NA	NA	NA	NA

MAP

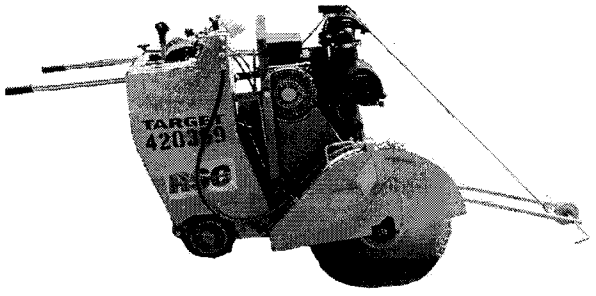

Date Reviewed: 8250L **RS Supervision:** Steve Gernatt / [signature] /
Print Name Signature [redacted]

ROCKY FLATS ENVIRONMENTAL TECHNOLOGY SITE

INSTRUMENT DATA

Mfg.	Eberline	Mfg.	NE	Mfg.	NE
Model	SAC 4	Model	Electra	Model	Electra
Serial #	824	Serial #	2344	Serial #	1260
Cal Due	10/30/02	Cal Due	1/17/03	Cal Due	8/27/02
Bkg	0.1 cpmα	Bkg	2 cpmα	Bkg	6 cpmα
Efficiency	33.00 %	Efficiency	22.20 %	Efficiency	21.20 %
MDA	20 dpmα	MDA	42 dpmα	MDA	67 dpmα

Mfg.	Eberline	Mfg.	NE	Mfg.	NE
Model	BC 4	Model	Electra	Model	Electra
Serial #	704	Serial #	2344	Serial #	1260
Cal Due	10/30/02	Cal Due	1/17/03	Cal Due	8/27/02
Bkg	33.1 cpmb	Bkg	408 cpmβ	Bkg	295 cpmβ
Efficiency	25.00 %	Efficiency	31.50 %	Efficiency	28.40 %
MDA	200 dpmβ	MDA	307 dpmβ	MDA	291 dpmβ

Survey Type: Contamination- Radiation
Building: Solar Ponds
Location: Routine
Purpose: Daily
RWP #: 02-Riss-020
Date: 8/12/02 Time: 0:00
[redacted]
RCT: NA / NA / NA
Print name Signature Emp. #

PRN/REN # : NA
Comments: NA

SURVEY RESULTS

Swipe #	Location / Description Results in DPM/100sq.cm	Removable		Total	
		Alpha	Beta	Alpha	Beta
1	Connex table	< 20	< 200	<67	<307
2	Connex table	< 20	< 200	<67	<307
3	Connex table	< 20	< 200	<67	<307
4	Connex table	< 20	< 200	<67	<307
5	Trash barrel, PPE barrel	< 20	< 200	<67	<307
6	Trash barrel, PPE barrel	< 20	< 200	<67	<307
7	Trash barrel, PPE barrel	< 20	< 200	<67	<307
8	Trash barrel, PPE barrel	< 20	< 200	<67	<307
9	Floor	< 20	< 200	<67	<307
10	Floor	< 20	< 200	<67	<307
11	Floor	< 20	< 200	<67	<307
12	Floor	< 20	< 200	<67	<307
13	Shelf	< 20	< 200	<67	<307
14	Shelf	< 20	< 200	<67	<307
15	Shelf	< 20	< 200	<67	<307
16	Shelf	< 20	< 200	<67	<307
17	NA	NA	NA	NA	NA
18	NA	NA	NA	NA	NA
19	NA	NA	NA	NA	NA
20	NA	NA	NA	NA	NA
21	NA	NA	NA	NA	NA
22	NA	NA	NA	NA	NA
23	NA	NA	NA	NA	NA
24	NA	NA	NA	NA	NA
25	NA	NA	NA	NA	NA

MAP

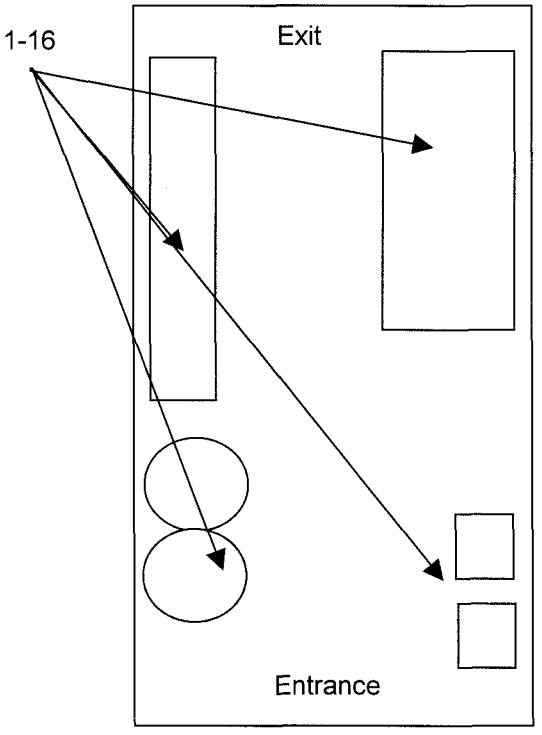

Date Reviewed: 82502 **RS Supervision:** Steve Gernatt [redacted]
Print Name Signature

83

ROCKY FLATS ENVIRONMENTAL TECHNOLOGY SITE

INSTRUMENT DATA

Mfg.	Eberline	Mfg.	NE	Mfg.	NE
Model	SAC 4	Model	Electra	Model	Electra
Serial #	824	Serial #	2344	Serial #	1260
Cal Due	10/30/02	Cal Due	1/17/03	Cal Due	8/27/02
Bkg	0.1 cpmα	Bkg	2 cpmα	Bkg	6 cpmα
Efficiency	33.00 %	Efficiency	22.20 %	Efficiency	21.20 %
MDA	20 dpmα	MDA	42 dpmα	MDA	67 dpmα

Mfg.	Eberline	Mfg.	NE	Mfg.	NE
Model	BC 4	Model	Electra	Model	Electra
Serial #	704	Serial #	2344	Serial #	1260
Cal Due	10/30/02	Cal Due	1/17/03	Cal Due	8/27/02
Bkg	33.1 cpmb	Bkg	408 cpmβ	Bkg	295 cpmβ
Efficiency	25.00 %	Efficiency	31.50 %	Efficiency	28.40 %
MDA	200 dpmβ	MDA	307 dpmβ	MDA	291 dpmβ

Survey Type: Contamination- Radiation
Building: Solar Ponds
Location: Between A and B Pads
Purpose: Daily
RWP #: 02-Riss-020
Date: 8/12/02 Time: 0:00
[redacted]
RCT: NA / NA / NA
Print name Signature Emp. #

PRN/REN # : NA
Comments: Scanned along areas of saw cuts & took Lg. Area wipes,

SURVEY RESULTS

Swipe #	Location / Description Results in DPM/100sq.cm	Removable Alpha	Removable Beta	Total Alpha	Total Beta
1	Concrete Pad	<20	<200	<67	<307
2	Concrete Pad	<20	<200	<67	<307
3	Concrete Pad	<20	<200	<67	<307
4	Concrete Pad	<20	<200	<67	<307
5	Concrete Pad	<20	<200	<67	<307
6	Concrete Pad	<20	<200	<67	<307
7	Concrete Pad	<20	<200	<67	<307
8	Concrete Pad	<20	< 200	<67	<307
9	Concrete Pad	<20	< 200	<67	<307
10	Concrete Pad	<20	< 200	<67	<307
11	Concrete Pad	<20	< 200	<67	<307
12	Concrete Pad	<20	< 200	<67	<307
13	Concrete Pad	<20	< 200	<67	<307
14	Concrete Pad	<20	< 200	<67	<307
15	Concrete Pad	<20	< 200	<67	<307
16	Concrete Pad	<20	<200	<67	<307
17	Concrete Pad	<20	<200	<67	<307
18	Concrete Pad	<20	<200	<67	<307
19	Concrete Pad	<20	<200	<67	<307
20	Concrete Pad	<20	<200	<67	<307
21	NA	NA	NA	NA	NA
22	NA	NA	NA	NA	NA
23	NA	NA	NA	NA	NA
24	NA	NA	NA	NA	NA
25	NA	NA	NA	NA	NA

MAP

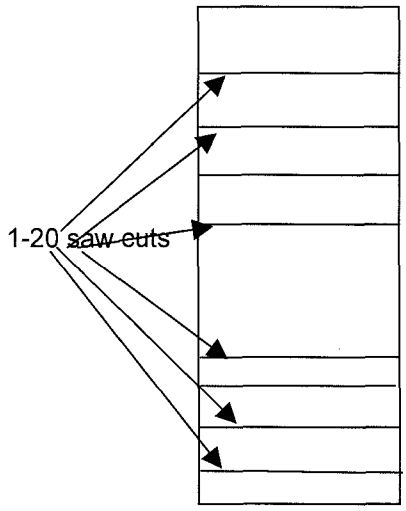

Date Reviewed: 8250L **RS Supervision:** Steve Gernatt / [signature] / [redacted]
Print Name Signature Emp. #

84

ROCKY FLATS ENVIRONMENTAL TECHNOLOGY SITE

INSTRUMENT DATA

Mfg.	Eberline	Mfg.	NE	Mfg.	NE
Model	SAC 4	Model	Electra	Model	Electra
Serial #	824	Serial #	2344	Serial #	1260
Cal Due	10/30/02	Cal Due	1/17/03	Cal Due	8/27/02
Bkg	0.1 cpmα	Bkg	2 cpmα	Bkg	6 cpmα
Efficiency	33.00 %	Efficiency	22.20 %	Efficiency	21.20 %
MDA	20 dpmα	MDA	42 dpmα	MDA	67 dpmα

Mfg.	Eberline	Mfg.	NE	Mfg.	NE
Model	BC 4	Model	Electra	Model	Electra
Serial #	704	Serial #	2344	Serial #	1260
Cal Due	10/30/02	Cal Due	1/17/03	Cal Due	8/27/02
Bkg	33.1 cpmb	Bkg	408 cpmβ	Bkg	295 cpmβ
Efficiency	25.00 %	Efficiency	31.50 %	Efficiency	28.40 %
MDA	200 dpmβ	MDA	307 dpmβ	MDA	291 dpmβ

Survey Type: Contamination- Radiation
Building: Solar Ponds
Location: Routine
Purpose: Daily
RWP #: 02-Riss-020
Date: 8/12/02 Time: 0:00

[redacted]

RCT: NA / NA / NA
Print name Signature Emp. #

PRN/REN # : NA
Comments: 100% Scan,swipes and pats.

SURVEY RESULTS

Swipe #	Location / Description Results in DPM/100sq.cm	Removable		Total	
		Alpha	Beta	Alpha	Beta
1	Metal Insulation	<20	<200	<67	<307
2	Metal Insulation	<20	<200	<67	<307
3	Metal Insulation	<20	<200	<67	<307
4	Metal Insulation	<20	<200	<67	<307
5	Metal Insulation	<20	<200	<67	<307
6	Metal Insulation	<20	<200	<67	<307
7	Metal Insulation	<20	<200	<67	<307
8	Metal Insulation	<20	< 200	<67	<307
9	Metal Insulation	<20	< 200	<67	<307
10	Metal Insulation	<20	< 200	<67	<307
11	Fiber Glass Insulation	<20	< 200	<67	<307
12	Fiber Glass Insulation	<20	< 200	<67	<307
13	Fiber Glass Insulation	<20	< 200	<67	<307
14	Fiber Glass Insulation	<20	< 200	<67	<307
15	Fiber Glass Insulation	<20	< 200	<67	<307
16	Fiber Glass Insulation	<20	<200	<67	<307
17	Fiber Glass Insulation	<20	<200	<67	<307
18	Fiber Glass Insulation	<20	<200	<67	<307
19	Fiber Glass Insulation	<20	<200	<67	<307
20	Fiber Glass Insulation	<20	<200	<67	<307
21	Fencing/posts	<20	<200	<67	<307
22	Fencing/posts	<20	<200	<67	<307
23	bollards	<20	<200	<67	<307
24	bollards	<20	<200	<67	<307
25	NA	NA	NA	NA	NA

MAP

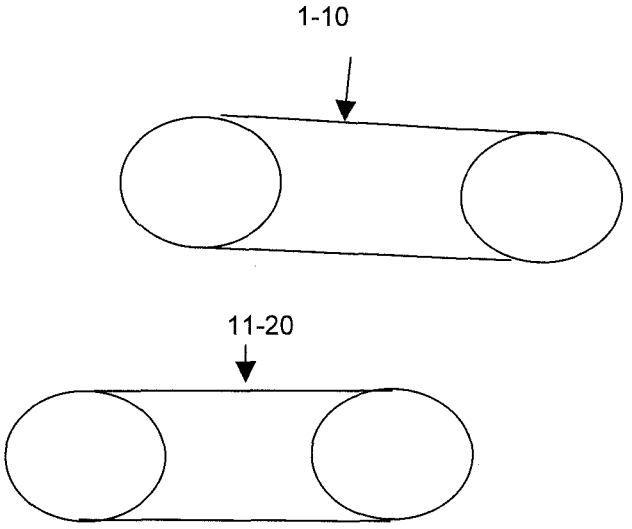

Date Reviewed: 8/30/02 **RS Supervision:** Steve Gernatt / [signature] / [redacted]
Print Name Signature

ROCKY FLATS ENVIRONMENTAL TECHNOLOGY SITE

INSTRUMENT DATA

Mfg.	Eberline	Mfg.	NE	Mfg.	NE
Model	SAC 4	Model	Electra	Model	Electra
Serial #	824	Serial #	1260	Serial #	1672
Cal Due	10/30/02	Cal Due	8/27/02	Cal Due	8/26/02
Bkg	0.5 cpmα	Bkg	0 cpmα	Bkg	4 cpmα
Efficiency	33.00 %	Efficiency	21.20 %	Efficiency	21.80 %
MDA	20 dpmα	MDA	13 dpmα	MDA	55 dpmα

Mfg.	Eberline	Mfg.	NE	Mfg.	NE
Model	BC 4	Model	Electra	Model	Electra
Serial #	704	Serial #	1260	Serial #	1672
Cal Due	10/30/02	Cal Due	8/27/02	Cal Due	8/26/02
Bkg	35.2 cpmb	Bkg	287 cpmβ	Bkg	394 cpmβ
Efficiency	25.00 %	Efficiency	28.40 %	Efficiency	31.00 %
MDA	200 dpmβ	MDA	287 dpmβ	MDA	306 dpmβ

Survey Type: Contamination- Radiation
Building: Solar Ponds
Location: Routine
Purpose: Daily
RWP #: 02-Riss-020
Date: 8/8/02 Time: 15:00
[redacted]
RCT: NA / NA / NA
Print name Signature Emp. #

PRN/REN # : NA
Comments: NA

SURVEY RESULTS

Swipe #	Location / Description Results in DPM/100sq.cm	Removable Alpha	Removable Beta	Total Alpha	Total Beta
1	Connex table	< 20	< 200	<55	<306
2	Connex table	< 20	< 200	<55	<306
3	Connex table	< 20	< 200	<55	<306
4	Connex table	< 20	< 200	<55	<306
5	Trash barrel, PPE barrel	< 20	< 200	<55	<306
6	Trash barrel, PPE barrel	< 20	< 200	<55	<306
7	Trash barrel, PPE barrel	< 20	< 200	<55	<306
8	Trash barrel, PPE barrel	< 20	< 200	<55	<306
9	Floor	< 20	< 200	<55	<306
10	Floor	< 20	< 200	<55	<306
11	Floor	< 20	< 200	<55	<306
12	Floor	< 20	< 200	<55	<306
13	Shelf	< 20	< 200	<55	<306
14	Shelf	< 20	< 200	<55	<306
15	Shelf	< 20	< 200	<55	<306
16	Shelf	< 20	< 200	<55	<306
17	NA	NA	NA	NA	NA
18	NA	NA	NA	NA	NA
19	NA	NA	NA	NA	NA
20	NA	NA	NA	NA	NA
21	NA	NA	NA	NA	NA
22	NA	NA	NA	NA	NA
23	NA	NA	NA	NA	NA
24	NA	NA	NA	NA	NA
25	NA	NA	NA	NA	NA

MAP

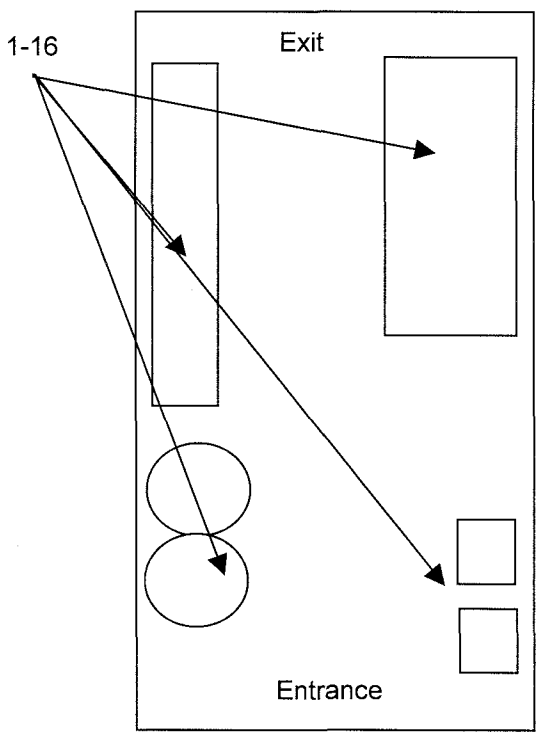

Date Reviewed: 8-25-02 **RS Supervision:** Steve Gernatt / [signature] /
Print Name Signature [redacted]

ROCKY FLATS ENVIRONMENTAL TECHNOLOGY SITE

INSTRUMENT DATA

	Eberline	Mfg.	NE	Mfg.	NE
Model	SAC 4	Model	Electra	Model	Electra
Serial #	824	Serial #	1260	Serial #	NA
Cal Due	10/30/02	Cal Due	08/27/02	Cal Due	NA
Bkg	0.5 cpmα	Bkg	0 cpmα	Bkg	NA cpmα
Efficiency	33.00 %	Efficiency	21.20 %	Efficiency	NA %
MDA	20 dpmα	MDA	13 dpmα	MDA	NA dpmα
Mfg.	Eberline	Mfg.	NE	Mfg.	NE
Model	BC 4	Model	Electra	Model	Electra
Serial #	704	Serial #	1260	Serial #	NA
Cal Due	10/30/02	Cal Due	08/27/02	Cal Due	NA
Bkg	35.2 cpmβ	Bkg	287 cpmβ	Bkg	NA cpmβ
Efficiency	25.00 %	Efficiency	28.40 %	Efficiency	NA %
MDA	200 dpmβ	MDA	287 dpmβ	MDA	NA dpmβ

Survey Type: Contamination
Building: Solar Ponds
Location: Solar Ponds
Purpose: End of Shift Survey

RWP #: 02-Riss-020

Date: 8/8/02 Time: 17:00

[redacted]

RCT: NA / NA / NA
Print name / Signature / Emp. #

PRN/REN # : NA
Comments: NA

SURVEY RESULTS

Swipe #	Location / Description Results in DPM/100sq.cm	Removable		Total	
		Alpha	Beta	Alpha	Beta
1	Teeth	< 20	< 200	<13	<287
2	I/S bucket	< 20	< 200	<13	<287
3	I/S bucket	< 20	< 200	<13	<287
4	O/S bucket	< 20	< 200	<13	<287
5	O/S bucket	< 20	< 200	<13	<287
6	END OF SURVEY	NA	NA	NA	NA
7	NA	NA	NA	NA	NA
8	NA	NA	NA	NA	NA
9	NA	NA	NA	NA	NA
10	NA	NA	NA	NA	NA
11	NA	NA	NA	NA	NA
12	NA	NA	NA	NA	NA
13	NA	NA	NA	NA	NA
14	NA	NA	NA	NA	NA
15	NA	NA	NA	NA	NA
16	NA	NA	NA	NA	NA
17	NA	NA	NA	NA	NA
18	NA	NA	NA	NA	NA
19	NA	NA	NA	NA	NA
20	NA	NA	NA	NA	NA
21	NA	NA	NA	NA	NA
22	NA	NA	NA	NA	NA
23	NA	NA	NA	NA	NA
24	NA	NA	NA	NA	NA
25	NA	NA	NA	NA	NA

MAP

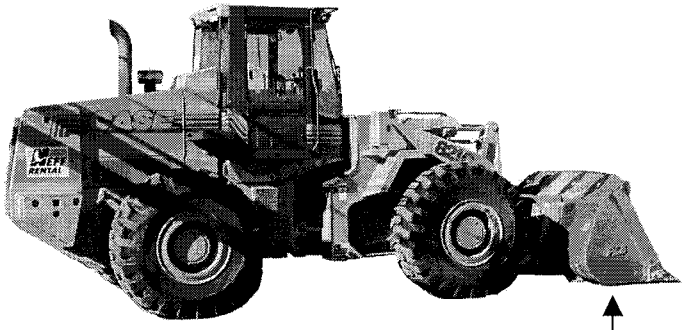

1-5

Date Reviewed: 8-9-02 **RS Supervision:** Steve Gernatt / [redacted] /
Print Name / Signature

ROCKY FLATS ENVIRONMENTAL TECHNOLOGY SITE

INSTRUMENT DATA

Mfg.	Eberline	Mfg.	NE	Mfg.	NE
Model	SAC 4	Model	Electra	Model	Electra
Serial #	824	Serial #	1260	Serial #	1672
Cal Due	10/30/02	Cal Due	8/27/02	Cal Due	8/26/02
Bkg	0.5 cpmα	Bkg	0 cpmα	Bkg	4 cpmα
Efficiency	33.00 %	Efficiency	21.20 %	Efficiency	21.80 %
MDA	20 dpmα	MDA	13 dpmα	MDA	55 dpmα

Mfg.	Eberline	Mfg.	NE	Mfg.	NE
Model	BC 4	Model	Electra	Model	Electra
Serial #	704	Serial #	1260	Serial #	1672
Cal Due	10/30/02	Cal Due	8/27/02	Cal Due	8/26/02
Bkg	35.2 cpmb	Bkg	287 cpmβ	Bkg	394 cpmβ
Efficiency	25.00 %	Efficiency	28.40 %	Efficiency	31.00 %
MDA	200 dpmβ	MDA	287 dpmβ	MDA	306 dpmβ

Survey Type: Contamination- Radiation
Building: Solar Ponds
Location: Routine
Purpose: Daily
RWP #: 02-Riss-020
Date: 8/8/02 Time: 15:00
[redacted]
RCT: NA / NA / NA
Print name / Signature / Emp. #

PRN/REN # : NA
Comments: 100% Scan,swipes and pats.

SURVEY RESULTS

Swipe #	Location / Description Results in DPM/100sq.cm	Removable Alpha	Removable Beta	Total Alpha	Total Beta
1	Metal Insulation	<20	<200	<55	<306
2	Metal Insulation	<20	<200	<55	<306
3	Metal Insulation	<20	<200	<55	<306
4	Metal Insulation	<20	<200	<55	<306
5	Metal Insulation	<20	<200	<55	<306
6	Metal Insulation	<20	<200	<55	<306
7	Metal Insulation	<20	<200	<55	<306
8	Metal Insulation	<20	< 200	<55	<306
9	Metal Insulation	<20	< 200	<55	<306
10	Metal Insulation	<20	< 200	<55	<306
11	Fiber Glass Insulation	<20	< 200	<55	<306
12	Fiber Glass Insulation	<20	< 200	<55	<306
13	Fiber Glass Insulation	<20	< 200	<55	<306
14	Fiber Glass Insulation	<20	< 200	<55	<306
15	Fiber Glass Insulation	<20	< 200	<55	<306
16	Fiber Glass Insulation	<20	<200	<55	<306
17	Fiber Glass Insulation	<20	<200	<55	<306
18	Fiber Glass Insulation	<20	<200	<55	<306
19	Fiber Glass Insulation	<20	<200	<55	<306
20	Fiber Glass Insulation	<20	<200	<55	<306
21	Fencing/posts	<20	<200	<55	<306
22	Fencing/posts	<20	<200	<55	<306
23	bollards	<20	<200	<55	<306
24	bollards	<20	<200	<55	<306
25	NA	NA	NA	NA	NA

MAP

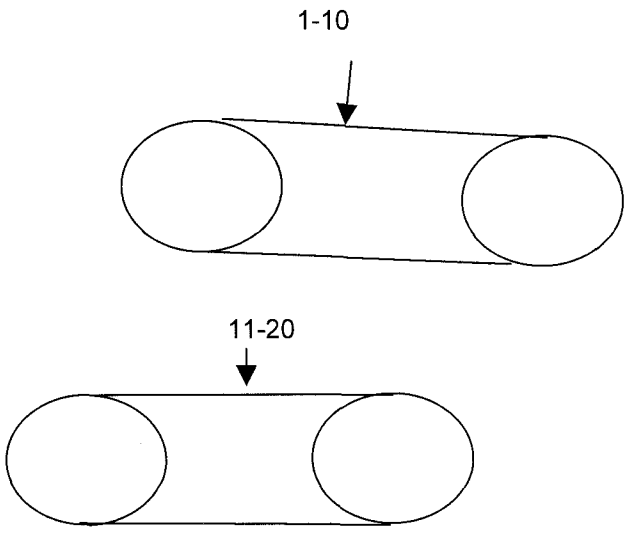

Date Reviewed: 8-9-02 **RS Supervision:** Steve Gernatt / [signature] / [redacted]
Print Name / Signature

ROCKY FLATS ENVIRONMENTAL TECHNOLOGY SITE

INSTRUMENT DATA

Mfg.	Eberline	Mfg.	N/A	Mfg.	N/A	**Survey Type:**	Contamination, Radiation
Model	SAC 4	Model	N/A	Model	N/A	Building:	Solar Ponds
Serial #	824	Serial #	N/A	Serial #	N/A	Location:	Solar Ponds
Cal Due	10/30/02	Cal Due	N/A	Cal Due	N/A	Purpose:	sample survey
Bkg	0.5 cpmα	Bkg	N/A	Bkg	N/A		
Efficiency	33.00 %	Efficiency	N/A	Efficiency	N/A	RWP #:	NA
MDA	20 dpmα	MDA	N/A	MDA	N/A		

Mfg.	Eberline	Mfg.	N/A	Mfg.	Bicron	Date:	8/8/02 Time: 15:00
Model	BC 4	Model	N/A	Model	μ rem	[redacted]	
Serial #	704	Serial #	N/A	Serial #	C244		
Cal Due	10/30/02	Cal Due	N/A	Cal Due	11/3/02		
Bkg	35.2 cpmβ	Bkg	N/A	Bkg	<10 μrem	RCT:	NA / NA / NA
Efficiency	25.00 %	Efficiency	N/A	Efficiency	N/A		Print name / Signature / Emp. #
MDA	200 dpmβ	MDA	N/A	MDA	<17 μrem		

PRN/REN # : 020626-T130C-002

Comments: NA

SURVEY RESULTS

Swipe #	Location / Description Results in DPM/100sq.cm	Removable Alpha	Removable Beta	Total Alpha	Total Beta	μrem/hr
1	02E0190-001.001	<20	<200	NA	NA	<17
2	02E0190-002.001	<20	<200	NA	NA	<17
3	02E0190-003.001	<20	<200	NA	NA	<17
4	02E0190-004.001	<20	<200	NA	NA	<17
5	02E0190-005.001	<20	<200	NA	NA	<17
6	02E0190-006.001	<20	<200	NA	NA	<17
7	02E0190-007.001	<20	<200	NA	NA	<17
8	02E0190-001.002	<20	<200	NA	NA	<17
9	02E0190-002.002	<20	<200	NA	NA	<17
10	02E0190-003.002	<20	<200	NA	NA	<17
11	02E0190-004.002	<20	<200	NA	NA	<17
12	02E0190-005.002	<20	<200	NA	NA	<17
13	02E0190-007.002	<20	<200	NA	NA	<17
14	Outside bag	<20	<200	NA	NA	<17
15	Outside bag	<20	<200	NA	NA	<17
16	Outside bag	<20	<200	NA	NA	<17
17	Outside bag	<20	<200	NA	NA	<17
18	NA	NA	NA	NA	NA	NA
19	NA	NA	NA	NA	NA	NA
20	NA	NA	NA	NA	NA	NA
21	NA	NA	NA	NA	NA	NA
22	NA	NA	NA	NA	NA	NA
23	NA	NA	NA	NA	NA	NA
24	NA	NA	NA	NA	NA	NA
25	NA	NA	NA	NA	NA	NA

MAP

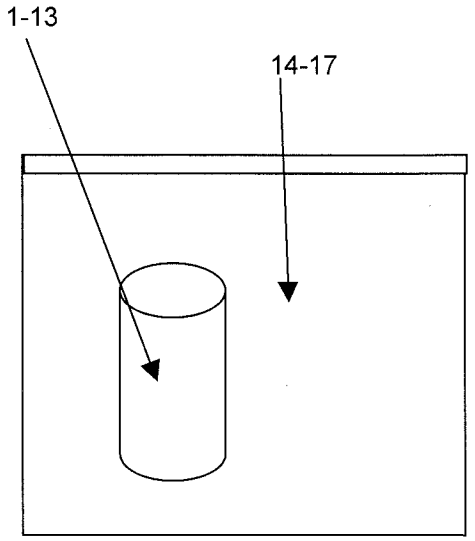

Date Reviewed: 8-9-02 **RS Supervision:** [redacted] / [redacted]

Print Name / Signature

ROCKY FLATS ENVIRONMENTAL TECHNOLOGY SITE

INSTRUMENT DATA

Mfg.	Eberline	Mfg.	NE	Mfg.	NE
Model	SAC 4	Model	Electra	Model	Electra
Serial #	824	Serial #	1260	Serial #	1672
Cal Due	10/30/02	Cal Due	8/27/02	Cal Due	8/26/02
Bkg	0.5 cpmα	Bkg	0 cpmα	Bkg	4 cpmα
Efficiency	33.00 %	Efficiency	21.20 %	Efficiency	21.80 %
MDA	20 dpmα	MDA	13 dpmα	MDA	55 dpmα

Mfg.	Eberline	Mfg.	NE	Mfg.	NE
Model	BC 4	Model	Electra	Model	Electra
Serial #	704	Serial #	1260	Serial #	1672
Cal Due	10/30/02	Cal Due	8/27/02	Cal Due	8/26/02
Bkg	35.2 cpmb	Bkg	287 cpmβ	Bkg	394 cpmβ
Efficiency	25.00 %	Efficiency	28.40 %	Efficiency	31.00 %
MDA	200 dpmβ	MDA	287 dpmβ	MDA	306 dpmβ

Survey Type: Contamination- Radiation
Building: Solar Ponds
Location: Between A and B Pads
Purpose: Recycle
RWP #: 02-Riss-020
Date: 8/8/02 Time: 15:00

[redacted]

RCT: NA / NA / NA
Print name Signature Emp. #

PRN/REN # : NA
Comments: Scanned along areas of saw cuts & took Lg. Area wipes,

SURVEY RESULTS

Swipe #	Location / Description Results in DPM/100sq.cm	Removable		Total	
		Alpha	Beta	Alpha	Beta
1	Concrete Pad	<20	<200	<55	<306
2	Concrete Pad	<20	<200	<55	<306
3	Concrete Pad	<20	<200	<55	<306
4	Concrete Pad	<20	<200	<55	<306
5	Concrete Pad	<20	<200	<55	<306
6	Concrete Pad	<20	<200	<55	<306
7	Concrete Pad	<20	<200	<55	<306
8	Concrete Pad	<20	< 200	<55	<306
9	Concrete Pad	<20	< 200	<55	<306
10	Concrete Pad	<20	< 200	<55	<306
11	Concrete Pad	<20	< 200	<55	<306
12	Concrete Pad	<20	< 200	<55	<306
13	Concrete Pad	<20	< 200	<55	<306
14	Concrete Pad	<20	< 200	<55	<306
15	Concrete Pad	<20	< 200	<55	<306
16	Concrete Pad	<20	<200	<55	<306
17	Concrete Pad	<20	<200	<55	<306
18	Concrete Pad	<20	<200	<55	<306
19	Concrete Pad	<20	<200	<55	<306
20	Concrete Pad	<20	<200	<55	<306
21	NA	NA	NA	NA	NA
22	NA	NA	NA	NA	NA
23	NA	NA	NA	NA	NA
24	NA	NA	NA	NA	NA
25	NA	NA	NA	NA	NA

MAP

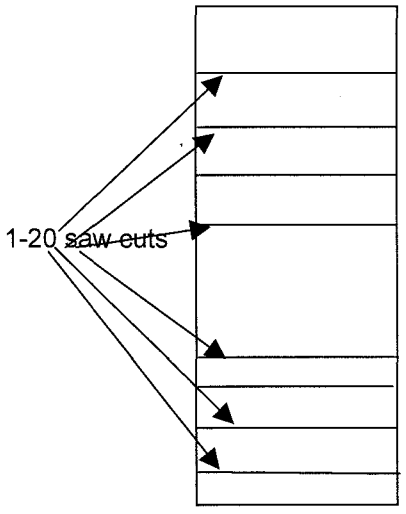

Date Reviewed: _____ **RS Supervision:** Steve Gernatt / [redacted] /
Print Name Signature

90

ROCKY FLATS ENVIRONMENTAL TECHNOLOGY SITE

INSTRUMENT DATA

Mfg.	Eberline	Mfg.	NE	Mfg.	NE
Model	SAC 4	Model	Electra	Model	Electra
Serial #	824	Serial #	1260	Serial #	1672
Cal Due	10/30/02	Cal Due	8/27/02	Cal Due	8/26/02
Bkg	0.1 cpmα	Bkg	4 cpmα	Bkg	4 cpmα
Efficiency	33.00 %	Efficiency	21.20 %	Efficiency	21.80 %
MDA	20 dpmα	MDA	57 dpmα	MDA	55 dpmα

Mfg.	Eberline	Mfg.	NE	Mfg.	NE
Model	BC 4	Model	Electra	Model	Electra
Serial #	704	Serial #	1260	Serial #	1672
Cal Due	10/30/02	Cal Due	8/27/02	Cal Due	8/26/02
Bkg	31.8 cpmb	Bkg	267 cpmβ	Bkg	349 cpmβ
Efficiency	25.00 %	Efficiency	28.40 %	Efficiency	31.00 %
MDA	200 dpmβ	MDA	277 dpmβ	MDA	289 dpmβ

Survey Type: Contamination- Radiation
Building: Solar Ponds
Location: Between A and B Pads
Purpose: Recycle

RWP #: 02-Riss-020

Date: 8/7/02 Time: 15:00

[redacted]

RCT: NA / NA / NA
Print name Signature Emp. #

PRN/REN # : NA
Comments: Scanned along areas of saw cuts & took Lg. Area wipes,

SURVEY RESULTS

Swipe #	Location / Description Results in DPM/100sq.cm	Removable		Total	
		Alpha	Beta	Alpha	Beta
1	Concrete Pad	<20	<200	<57	<289
2	Concrete Pad	<20	<200	<57	<289
3	Concrete Pad	<20	<200	<57	<289
4	Concrete Pad	<20	<200	<57	<289
5	Concrete Pad	<20	<200	<57	<289
6	Concrete Pad	<20	<200	<57	<289
7	Concrete Pad	<20	<200	<57	<289
8	Concrete Pad	<20	< 200	<57	<289
9	Concrete Pad	<20	< 200	<57	<289
10	Concrete Pad	<20	< 200	<57	<289
11	Concrete Pad	<20	< 200	<57	<289
12	Concrete Pad	<20	< 200	<57	<289
13	Concrete Pad	<20	< 200	<57	<289
14	Concrete Pad	<20	< 200	<57	<289
15	Concrete Pad	<20	< 200	<57	<289
16	Concrete Pad	<20	<200	<57	<289
17	NA	NA	NA	NA	NA
18	NA	NA	NA	NA	NA
19	NA	NA	NA	NA	NA
20	NA	NA	NA	NA	NA
21	NA	NA	NA	NA	NA
22	NA	NA	NA	NA	NA
23	NA	NA	NA	NA	NA
24	NA	NA	NA	NA	NA
25	NA	NA	NA	NA	NA

MAP

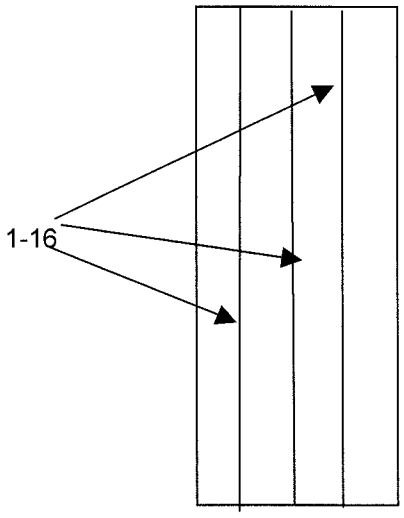

Date Reviewed: _____ **RS Supervision:** Steve Gernatt / [redacted] /
Print Name Signature

9/

ROCKY FLATS ENVIRONMENTAL TECHNOLOGY SITE

INSTRUMENT DATA

Mfg.	Eberline	Mfg.	NE	Mfg.	NE
Model	SAC 4	Model	Electra	Model	Electra
Serial #	824	Serial #	1260	Serial #	1672
Cal Due	~~10/30/02~~ 10/01/02	Cal Due	8/27/02	Cal Due	8/26/02
Bkg	0.1 cpmα	Bkg	4 cpmα	Bkg	4 cpmα
Efficiency	33.00 %	Efficiency	21.20 %	Efficiency	21.80 %
MDA	20 dpmα	MDA	57 dpmα	MDA	55 dpmα

Mfg.	Eberline	Mfg.	NE	Mfg.	NE
Model	BC 4	Model	Electra	Model	Electra
Serial #	704	Serial #	1260	Serial #	1672
Cal Due	10/30/02	Cal Due	8/27/02	Cal Due	8/26/02
Bkg	31.8 cpmb	Bkg	267 cpmβ	Bkg	349 cpmβ
Efficiency	25.00 %	Efficiency	28.40 %	Efficiency	31.00 %
MDA	200 dpmβ	MDA	277 dpmβ	MDA	289 dpmβ

Survey Type: Contamination- Radiation
Building: Solar Ponds
Location: Routine
Purpose: Recycle

RWP #: 02-Riss-020

Date: 8/7/02 Time: 15:00

[redacted]

PRN/REN # : NA
Comments: 100% Scan,swipes and pats.

SURVEY RESULTS

Swipe #	Location / Description Results in DPM/100sq.cm	Removable Alpha	Removable Beta	Total Alpha	Total Beta
1	Metal Insulation	<20	<200	<57	<289
2	Metal Insulation	<20	<200	<57	<289
3	Metal Insulation	<20	<200	<57	<289
4	Metal Insulation	<20	<200	<57	<289
5	Metal Insulation	<20	<200	<57	<289
6	Metal Insulation	<20	<200	<57	<289
7	Metal Insulation	<20	<200	<57	<289
8	Metal Insulation	<20	< 200	<57	<289
9	Metal Insulation	<20	< 200	<57	<289
10	Metal Insulation	<20	< 200	<57	<289
11	Fiber Glass Insulation	<20	< 200	<57	<289
12	Fiber Glass Insulation	<20	< 200	<57	<289
13	Fiber Glass Insulation	<20	< 200	<57	<289
14	Fiber Glass Insulation	<20	< 200	<57	<289
15	Fiber Glass Insulation	<20	< 200	<57	<289
16	Fiber Glass Insulation	<20	<200	<57	<289
17	Fiber Glass Insulation	<20	<200	<57	<289
18	Fiber Glass Insulation	<20	<200	<57	<289
19	Fiber Glass Insulation	<20	<200	<57	<289
20	Fiber Glass Insulation	<20	<200	<57	<289
21	NA	NA	NA	NA	NA
22	NA	NA	NA	NA	NA
23	NA	NA	NA	NA	NA
24	NA	NA	NA	NA	NA
25	NA	NA	NA	NA	NA

MAP

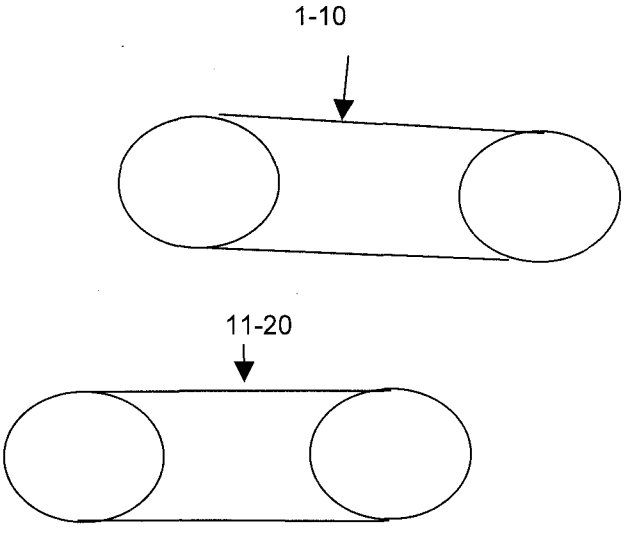

Date Reviewed: 8/25/02 **RS Supervision:** Steve Gernatt [signature]
Print Name Signature

[redacted]

ROCKY FLATS ENVIRONMENTAL TECHNOLOGY SITE

INSTRUMENT DATA

Mfg.	Eberline	Mfg.	NE	Mfg.	NE
Model	SAC 4	Model	Electra	Model	Electra
Serial #	824	Serial #	1260	Serial #	1672
Cal Due	10/30/20	Cal Due	8/27/02	Cal Due	8/26/02
Bkg	0.1 cpmα	Bkg	4 cpmα	Bkg	4 cpmα
Efficiency	33.00 %	Efficiency	21.20 %	Efficiency	21.80 %
MDA	20 dpmα	MDA	57 dpmα	MDA	55 dpmα

Mfg.	Eberline	Mfg.	NE	Mfg.	NE
Model	BC 4	Model	Electra	Model	Electra
Serial #	704	Serial #	1260	Serial #	1672
Cal Due	10/30/02	Cal Due	8/27/02	Cal Due	8/26/02
Bkg	31.8 cpmb	Bkg	267 cpmβ	Bkg	349 cpmβ
Efficiency	25.00 %	Efficiency	28.40 %	Efficiency	31.00 %
MDA	200 dpmβ	MDA	277 dpmβ	MDA	289 dpmβ

Survey Type: Contamination- Radiation
Building: Solar Ponds
Location: Between A and B Pads
Purpose: Recycle

RWP #: 02-Riss-020

Date: 8/7/02 Time: 15:00

[redacted]

PRN/REN # : NA
Comments: NA

SURVEY RESULTS

Swipe #	Location / Description Results in DPM/100sq.cm	Removable		Total	
		Alpha	Beta	Alpha	Beta
1	BUCKET	< 20	< 200	<57	<289
2	BUCKET	< 20	< 200	<57	<289
3	BUCKET	< 20	< 200	<57	<289
4	BUCKET	< 20	< 200	<57	<289
5	TRACKS	< 20	< 200	<57	<289
6	TRACKS	< 20	< 200	<57	<289
7	TRACKS	< 20	< 200	<57	<289
8	TRACKS	< 20	< 200	<57	<289
9	CAB	< 20	< 200	<57	<289
10	CAB	< 20	< 200	<57	<289
11	NA	NA	NA	NA	NA
12	NA	NA	NA	NA	NA
13	NA	NA	NA	NA	NA
14	NA	NA	NA	NA	NA
15	NA	NA	NA	NA	NA
16	NA	NA	NA	NA	NA
17	NA	NA	NA	NA	NA
18	NA	NA	NA	NA	NA
19	NA	NA	NA	NA	NA
20	NA	NA	NA	NA	NA
21	NA	NA	NA	NA	NA
22	NA	NA	NA	NA	NA
23	NA	NA	NA	NA	NA
24	NA	NA	NA	NA	NA
25	NA	NA	NA	NA	NA

MAP

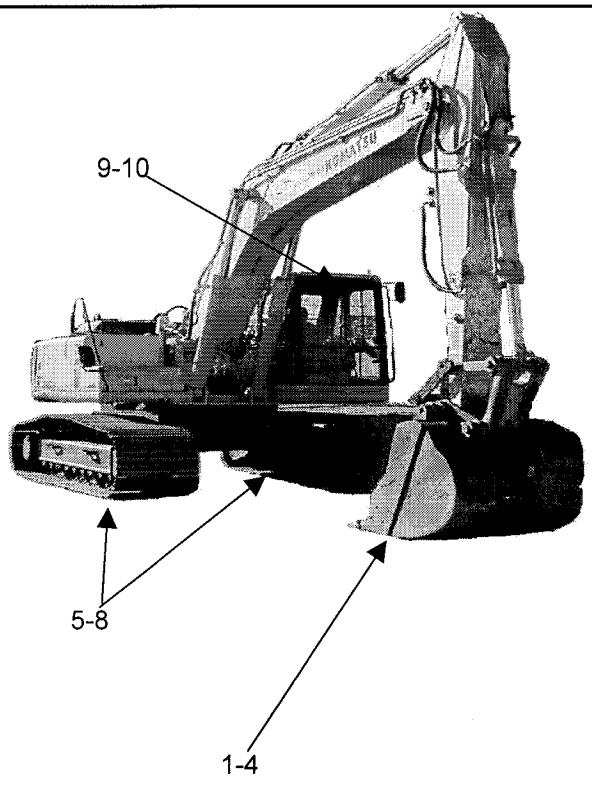

Date Reviewed: 8-9-02 **RS Supervision:** [redacted]
Print Name Signature

ROCKY FLATS ENVIRONMENTAL TECHNOLOGY SITE

INSTRUMENT DATA

Mfg.	Eberline	Mfg.	NE	Mfg.	NE
Model	SAC 4	Model	Electra	Model	Electra
Serial #	824	Serial #	1260	Serial #	1672
Cal Due	~~10/30/02~~ 10/01/02	Cal Due	8/27/02	Cal Due	8/26/02
Bkg	0.1 cpmα	Bkg	4 cpmα	Bkg	4 cpmα
Efficiency	33.00 %	Efficiency	21.20 %	Efficiency	21.80 %
MDA	20 dpmα	MDA	57 dpmα	MDA	55 dpmα

Mfg.	Eberline	Mfg.	NE	Mfg.	NE
Model	BC 4	Model	Electra	Model	Electra
Serial #	704	Serial #	1260	Serial #	1672
Cal Due	10/30/02	Cal Due	8/27/02	Cal Due	8/26/02
Bkg	31.8 cpmb	Bkg	267 cpmβ	Bkg	349 cpmβ
Efficiency	25.00 %	Efficiency	28.40 %	Efficiency	31.00 %
MDA	200 dpmβ	MDA	277 dpmβ	MDA	289 dpmβ

Survey Type: Contamination- Radiation
Building: Solar Ponds
Location: Routine
Purpose: Daily

RWP #: 02-Riss-020

Date: 8/7/02 Time: 15:00

[redacted]

PRN/REN # : NA
Comments: NA

SURVEY RESULTS

Swipe #	Location / Description Results in DPM/100sq.cm	Removable Alpha	Removable Beta	Total Alpha	Total Beta
1	Connex table	< 20	< 200	<57	<289
2	Connex table	< 20	< 200	<57	<289
3	Connex table	< 20	< 200	<57	<289
4	Connex table	< 20	< 200	<57	<289
5	Trash barrel, PPE barrel	< 20	< 200	<57	<289
6	Trash barrel, PPE barrel	< 20	< 200	<57	<289
7	Trash barrel, PPE barrel	< 20	< 200	<57	<289
8	Trash barrel, PPE barrel	< 20	< 200	<57	<289
9	Floor	< 20	< 200	<57	<289
10	Floor	< 20	< 200	<57	<289
11	Floor	< 20	< 200	<57	<289
12	Floor	< 20	< 200	<57	<289
13	Shelf	< 20	< 200	<57	<289
14	Shelf	< 20	< 200	<57	<289
15	Shelf	< 20	< 200	<57	<289
16	Shelf	< 20	< 200	<57	<289
17	NA	NA	NA	NA	NA
18	NA	NA	NA	NA	NA
19	NA	NA	NA	NA	NA
20	NA	NA	NA	NA	NA
21	NA	NA	NA	NA	NA
22	NA	NA	NA	NA	NA
23	NA	NA	NA	NA	NA
24	NA	NA	NA	NA	NA
25	NA	NA	NA	NA	NA

MAP

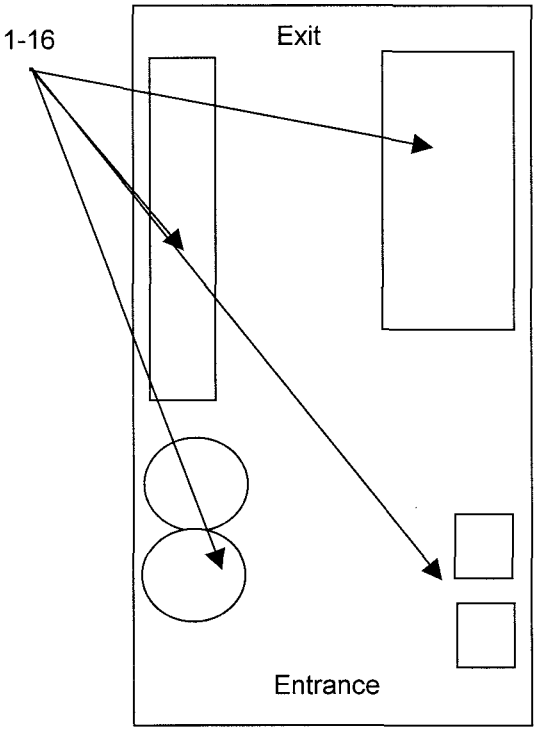

Date Reviewed: 8/5/02 **RS Supervision:** Steve Gernatt [redacted]
Print Name Signature

ROCKY FLATS ENVIRONMENTAL TECHNOLOGY SITE

INSTRUMENT DATA

Mfg.	Eberline	Mfg.	NE	Mfg.	NE
Model	SAC 4	Model	Electra	Model	Electra
Serial #	824	Serial #	1260	Serial #	1672
Cal Due	10/30/20	Cal Due	8/27/02	Cal Due	8/26/02
Bkg	0.1 cpmα	Bkg	0 cpmα	Bkg	1 cpmα
Efficiency	33.00 %	Efficiency	21.20 %	Efficiency	21.80 %
MDA	20 dpmα	MDA	13 dpmα	MDA	34 dpmα

Mfg.	Eberline	Mfg.	NE	Mfg.	NE
Model	BC 4	Model	Electra	Model	Electra
Serial #	704	Serial #	1260	Serial #	1672
Cal Due	10/30/02	Cal Due	8/27/02	Cal Due	8/26/02
Bkg	29.6 cpmb	Bkg	278 cpmβ	Bkg	352 cpmβ
Efficiency	25.00 %	Efficiency	28.40 %	Efficiency	31.00 %
MDA	200 dpmβ	MDA	283 dpmβ	MDA	290 dpmβ

Survey Type: Contamination- Radiation
Building: Solar Ponds
Location: Routine
Purpose: Daily

RWP #: 02-Riss-020

Date: 8/6/02 Time: 15:00

[redacted]

PRN/REN # : NA
Comments: NA

SURVEY RESULTS

Swipe #	Location / Description Results in DPM/100sq.cm	Removable		Total	
		Alpha	Beta	Alpha	Beta
1	finger	<20	<200	<34	<290
2	finger	<20	<200	<34	<290
3	finger	<20	<200	<34	<290
4	finger	<20	<200	<34	<290
5	finger	<20	<200	<34	<290
6	tracks	<20	<200	<34	<290
7	tracks	<20	<200	<34	<290
8	tracks	<20	< 200	<34	<290
9	tracks	<20	< 200	<34	<290
10	tracks	<20	< 200	<34	<290
11	tracks	<20	< 200	<34	<290
12	tracks	<20	< 200	<34	<290
13	tracks	<20	< 200	<34	<290
14	tracks	<20	< 200	<34	<290
15	tracks	<20	< 200	<34	<290
16	cab	<20	<200	<34	<290
17	cab	<20	<200	<34	<290
18	NA	NA	NA	NA	NA
19	NA	NA	NA	NA	NA
20	NA	NA	NA	NA	NA
21	NA	NA	NA	NA	NA
22	NA	NA	NA	NA	NA
23	NA	NA	NA	NA	NA
24	NA	NA	NA	NA	NA
25	NA	NA	NA	NA	NA

MAP

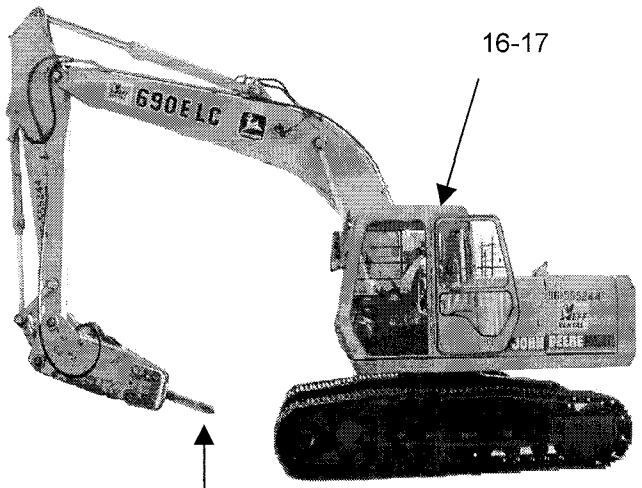

Date Reviewed: 8-9-02 **RS Supervision:** S Cressman / [redacted]
Print Name Signature

ROCKY FLATS ENVIRONMENTAL TECHNOLOGY SITE

INSTRUMENT DATA

Mfg.	Eberline	Mfg.	NE	Mfg.	NE
Model	SAC 4	Model	Electra	Model	Electra
Serial #	824	Serial #	1260	Serial #	1672
Cal Due	10/30/20	Cal Due	8/27/02	Cal Due	8/26/02
Bkg	0.1 cpmα	Bkg	0 cpmα	Bkg	1 cpmα
Efficiency	33.00 %	Efficiency	21.20 %	Efficiency	21.80 %
MDA	20 dpmα	MDA	13 dpmα	MDA	34 dpmα

Mfg.	Eberline	Mfg.	NE	Mfg.	NE
Model	BC 4	Model	Electra	Model	Electra
Serial #	704	Serial #	1260	Serial #	1672
Cal Due	10/30/02	Cal Due	8/27/02	Cal Due	8/26/02
Bkg	29.6 cpmb	Bkg	278 cpmβ	Bkg	352 cpmβ
Efficiency	25.00 %	Efficiency	28.40 %	Efficiency	31.00 %
MDA	200 dpmβ	MDA	283 dpmβ	MDA	290 dpmβ

Survey Type: Contamination- Radiation
Building: Solar Ponds
Location: Routine
Purpose: Daily

RWP #: 02-Riss-020

Date: 8/6/02 Time: 15:00

[redacted]

PRN/REN # : NA
Comments: NA

SURVEY RESULTS

Swipe #	Location / Description Results in DPM/100sq.cm	Removable		Total	
		Alpha	Beta	Alpha	Beta
1	Connex table	< 20	< 200	<34	<290
2	Connex table	< 20	< 200	<34	<290
3	Connex table	< 20	< 200	<34	<290
4	Connex table	< 20	< 200	<34	<290
5	Trash barrel, PPE barrel	< 20	< 200	<34	<290
6	Trash barrel, PPE barrel	< 20	< 200	<34	<290
7	Trash barrel, PPE barrel	< 20	< 200	<34	<290
8	Trash barrel, PPE barrel	< 20	< 200	<34	<290
9	Floor	< 20	< 200	<34	<290
10	Floor	< 20	< 200	<34	<290
11	Floor	< 20	< 200	<34	<290
12	Floor	< 20	< 200	<34	<290
13	Shelf	< 20	< 200	<34	<290
14	Shelf	< 20	< 200	<34	<290
15	Shelf	< 20	< 200	<34	<290
16	Shelf	< 20	< 200	<34	<290
17	NA	NA	NA	NA	NA
18	NA	NA	NA	NA	NA
19	NA	NA	NA	NA	NA
20	NA	NA	NA	NA	NA
21	NA	NA	NA	NA	NA
22	NA	NA	NA	NA	NA
23	NA	NA	NA	NA	NA
24	NA	NA	NA	NA	NA
25	NA	NA	NA	NA	NA

MAP

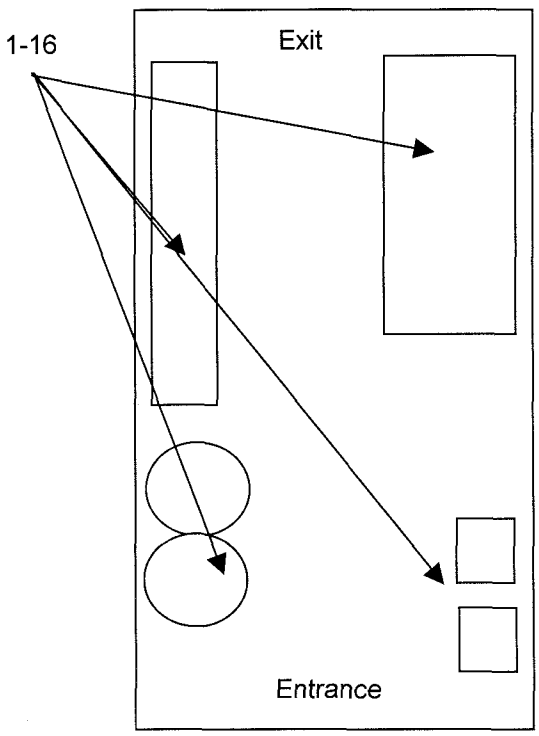

Date Reviewed: 8-9-02 **RS Supervision:** Steve Gernatt [redacted]
Print Name Signature

ROCKY FLATS ENVIRONMENTAL TECHNOLOGY SITE

INSTRUMENT DATA

Mfg.	Eberline	Mfg.	NE	Mfg.	NE
Model	SAC 4	Model	Electra	Model	Electra
Serial #	824	Serial #	1260	Serial #	1672
Cal Due	10/30/02	Cal Due	8/27/02	Cal Due	8/26/02
Bkg	0.1 cpmα	Bkg	0 cpmα	Bkg	1 cpmα
Efficiency	33.00 %	Efficiency	21.20 %	Efficiency	21.80 %
MDA	20 dpmα	MDA	13 dpmα	MDA	34 dpmα

Mfg.	Eberline	Mfg.	NE	Mfg.	NE
Model	BC 4	Model	Electra	Model	Electra
Serial #	704	Serial #	1260	Serial #	1672
Cal Due	10/30/02	Cal Due	8/27/02	Cal Due	8/26/02
Bkg	29.6 cpmb	Bkg	278 cpmβ	Bkg	352 cpmβ
Efficiency	25.00 %	Efficiency	28.40 %	Efficiency	31.00 %
MDA	200 dpmβ	MDA	283 dpmβ	MDA	290 dpmβ

Survey Type: Contamination- Radiation
Building: Solar Ponds
Location: Routine
Purpose: Daily

RWP #: 02-Riss-020

Date: 8/6/02 Time: 15:00

[redacted]

PRN/REN # : NA
Comments: NA

SURVEY RESULTS

Swipe #	Location / Description Results in DPM/100sq.cm	Removable		Total	
		Alpha	Beta	Alpha	Beta
1	Connex table	< 20	< 200	<34	<290
2	Connex table	< 20	< 200	<34	<290
3	Connex table	< 20	< 200	<34	<290
4	Connex table	< 20	< 200	<34	<290
5	Trash barrel, PPE barrel	< 20	< 200	<34	<290
6	Trash barrel, PPE barrel	< 20	< 200	<34	<290
7	Trash barrel, PPE barrel	< 20	< 200	<34	<290
8	Trash barrel, PPE barrel	< 20	< 200	<34	<290
9	Floor	< 20	< 200	<34	<290
10	Floor	< 20	< 200	<34	<290
11	Floor	< 20	< 200	<34	<290
12	Floor	< 20	< 200	<34	<290
13	Shelf	< 20	< 200	<34	<290
14	Shelf	< 20	< 200	<34	<290
15	Shelf	< 20	< 200	<34	<290
16	Shelf	< 20	< 200	<34	<290
17	NA	NA	NA	NA	NA
18	NA	NA	NA	NA	NA
19	NA	NA	NA	NA	NA
20	NA	NA	NA	NA	NA
21	NA	NA	NA	NA	NA
22	NA	NA	NA	NA	NA
23	NA	NA	NA	NA	NA
24	NA	NA	NA	NA	NA
25	NA	NA	NA	NA	NA

MAP

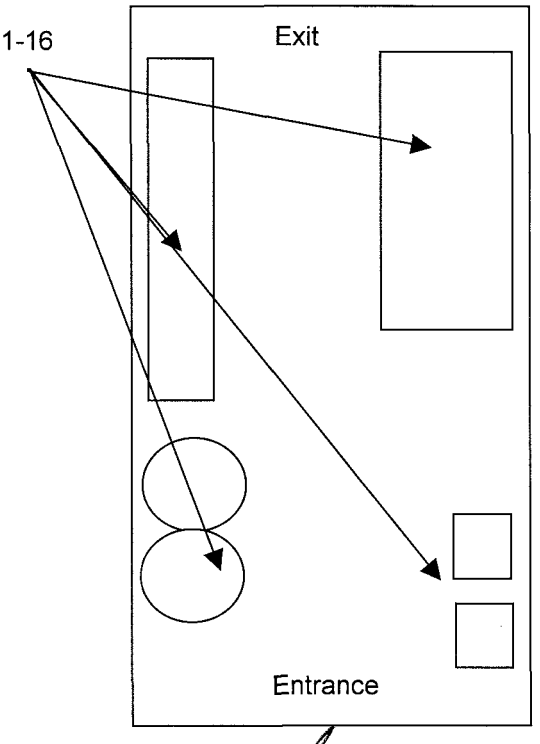

Date Reviewed: 8-2-02 **RS Supervision:** Steve Gernatt [redacted]
Print Name Signature

ROCKY FLATS ENVIRONMENTAL TECHNOLOGY SITE

INSTRUMENT DATA

Mfg.	Eberline	Mfg.	NE	Mfg.	NE
Model	SAC 4	Model	Electra	Model	Electra
Serial #	824	Serial #	1260	Serial #	1672
Cal Due	10/30/02	Cal Due	8/27/02	Cal Due	8/26/02
Bkg	0.1 cpmα	Bkg	0 cpmα	Bkg	1 cpmα
Efficiency	33.00 %	Efficiency	21.20 %	Efficiency	21.80 %
MDA	20 dpmα	MDA	13 dpmα	MDA	34 dpmα

Mfg.	Eberline	Mfg.	NE	Mfg.	NE
Model	BC 4	Model	Electra	Model	Electra
Serial #	704	Serial #	1260	Serial #	1672
Cal Due	10/30/02	Cal Due	8/27/02	Cal Due	8/26/02
Bkg	29.6 cpmb	Bkg	278 cpmβ	Bkg	352 cpmβ
Efficiency	25.00 %	Efficiency	28.40 %	Efficiency	31.00 %
MDA	200 dpmβ	MDA	283 dpmβ	MDA	290 dpmβ

Survey Type: Contamination- Radiation
Building: Solar Ponds
Location: Routine
Purpose: Daily
RWP #: 02-Riss-020
Date: 8/6/02 Time: 15:00

[redacted]

PRN/REN # : NA
Comments: NA

SURVEY RESULTS

Swipe #	Location / Description Results in DPM/100sq.cm	Removable Alpha	Removable Beta	Total Alpha	Total Beta
1	finger	<20	<200	<34	<290
2	finger	<20	<200	<34	<290
3	finger	<20	<200	<34	<290
4	finger	<20	<200	<34	<290
5	finger	<20	<200	<34	<290
6	tracks	<20	<200	<34	<290
7	tracks	<20	<200	<34	<290
8	tracks	<20	< 200	<34	<290
9	tracks	<20	< 200	<34	<290
10	tracks	<20	< 200	<34	<290
11	tracks	<20	< 200	<34	<290
12	tracks	<20	< 200	<34	<290
13	tracks	<20	< 200	<34	<290
14	tracks	<20	< 200	<34	<290
15	tracks	<20	< 200	<34	<290
16	cab	<20	<200	<34	<290
17	cab	<20	<200	<34	<290
18	NA	NA	NA	NA	NA
19	NA	NA	NA	NA	NA
20	NA	NA	NA	NA	NA
21	NA	NA	NA	NA	NA
22	NA	NA	NA	NA	NA
23	NA	NA	NA	NA	NA
24	NA	NA	NA	NA	NA
25	NA	NA	NA	NA	NA

MAP

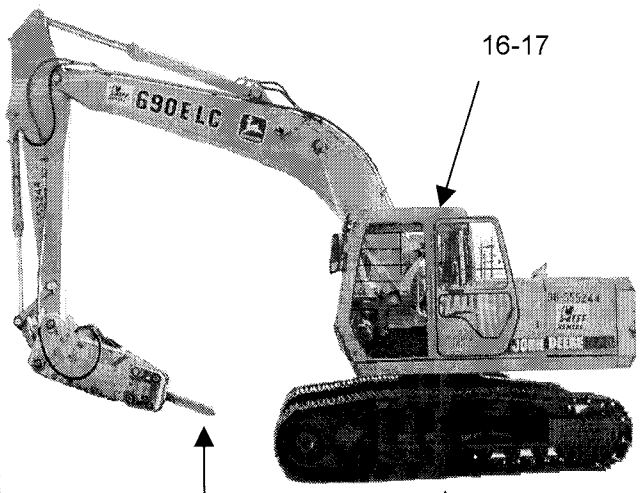

Date Reviewed: 8-21-02 **RS Supervision:** [redacted]
Print Name Signature

ROCKY FLATS ENVIRONMENTAL TECHNOLOGY SITE

INSTRUMENT DATA

Mfg.	Ludlum	Mfg.	Ludlum	Mfg.	NE Electra
Model	2929	Model	2929	Model	DP-6
Serial #	147735	Serial #	147727	Serial #	1417
Cal Due	1/25/02	Cal Due	1/12/03	Cal Due	1/18/03
Bkg	0.3 cpmα	Bkg	0.3 cpmα	Bkg	1 cpmα
Eff.	35.3 %	Eff.	33.5 %	Eff.	19.6 %
MDA	18 dpmα	MDA	18 dpmα	MDA	38 dpmα
Mfg.	Ludlum	Mfg.	Ludlum	Mfg.	NE Electra
Model	2929	Model	2929	Model	DP-6
Serial #	147735	Serial #	147727	Serial #	1417
Cal Due	1/25/02	Cal Due	1/12/03	Cal Due	1/18/03
Bkg	35.3 cpmβ	Bkg	33.5 cpmβ	Bkg	475 cpmβ
Eff.	39.8 %	Eff.	42.9 %	Eff.	30.6 %
MDA	205 dpmβ	MDA	205 dpmβ	MDA	340 dpmβ

Survey Type: contamination
Building: 788
Location: between solar ponds A and B
Purpose: Survey of concrete pad

RWP #: NA

Date: 8/6/02 Time: 1030

[redacted]

RCT: NA / NA / NA
Print name / Signature / Emp. #

PRN/REN # : NA
Comments: Swipes taken on 8/6/02 and counted on 8/7/02.

SURVEY RESULTS

Swipe	LOCATION	ALPHA Swipe	ALPHA Direct	ALPHA Wipe	BETA Swipe	BETA Direct	BETA Wipe
#	See map	dpm/100cm2	dpm/100cm2	dpm/wipe	dpm/100cm2	dpm/100cm2	dpm/wipe
1	Concrete	< 18	61	NA	< 205	899	NA
2	Concrete	< 18	61		< 205	879	
3	Concrete	< 18	71		< 205	690	
4	Concrete	< 18	51		< 205	859	
5	Concrete	< 18	36		< 205	846	
6	Concrete	< 18	168		< 205	1144	
7	Concrete	< 18	97		< 205	1124	
8	Concrete	< 18	71		< 205	1317	
9	Concrete	< 18	97		< 205	948	
10	Concrete	< 18	77		< 205	974	
11	Concrete	< 18	153		< 205	1101	
12	Concrete	< 18	122		< 205	1154	
13	Concrete	< 18	107		< 205	1000	
14	Concrete	< 18	128		< 205	1039	
15	Concrete	< 18	66		< 205	1036	
16	Concrete	< 18	102		< 205	1026	
17	Concrete	< 18	87		< 205	1088	
18	Concrete	< 18	77		< 205	974	
19	Concrete	< 18	77		< 205	997	
20	Concrete	< 18	112	NA	< 205	1131	NA

Date Reviewed: 8/12/02 **RS Supervision:** Steve Gernatt / [redacted]
Print Name / Signature

99

SURVEY RESULTS

Swipe #	LOCATION	ALPHA Swipe dpm/100cm2	ALPHA Direct dpm/100cm2	ALPHA Wipe dpm/wipe	BETA Swipe dpm/100cm2	BETA Direct dpm/100cm2	BETA Wipe dpm/wipe
21	Concrete ramp	< 18	122	NA	< 205	1006	NA
22	Concrete ramp	< 18	168		< 205	980	
23	Concrete ramp	< 18	122		< 205	1095	
24	Concrete ramp	< 18	148		< 205	1154	
25	Concrete ramp	< 18	56		< 205	1258	
26	Concrete ramp	< 18	158		< 205	1020	
27	Concrete ramp	< 18	107		< 205	1275	
28	Concrete ramp	< 18	133		< 205	1219	
29	Concrete ramp	< 18	117		< 205	1193	
30	Concrete ramp	< 18	143		< 205	1163	
NA	NA	NA	NA		NA	NA	
NA	NA	NA	NA	NA	NA	NA	NA

Drawing Showing Survey Points

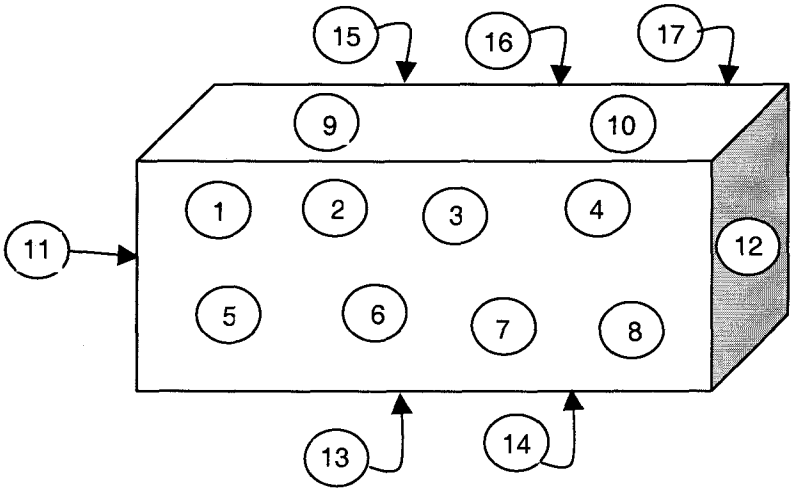

Survey is typical of four blocks of concrete between ponds A and B.

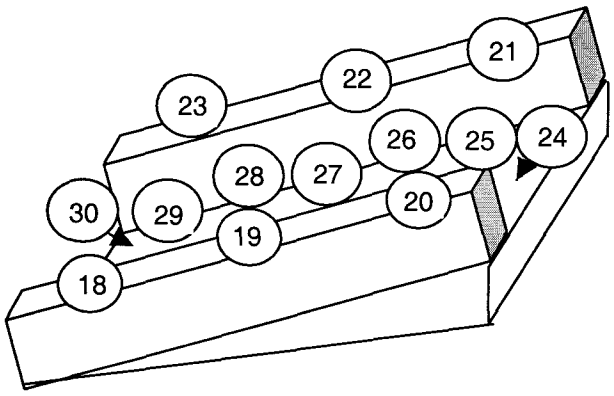

Survey is of the ramp in the north center between ponds A and B.

10

ROCKY FLATS ENVIRONMENTAL TECHNOLOGY SITE

INSTRUMENT DATA

Mfg.	Eberline	Mfg.	NE	Mfg.	NE
Model	SAC 4	Model	Electra	Model	Electra
Serial #	824	Serial #	1260	Serial #	1672
Cal Due	10/30/02	Cal Due	8/27/02	Cal Due	8/26/02
Bkg	0.1 cpmα	Bkg	0 cpmα	Bkg	1 cpmα
Efficiency	33.00 %	Efficiency	21.20 %	Efficiency	21.80 %
MDA	20 dpmα	MDA	13 dpmα	MDA	34 dpmα

Mfg.	Eberline	Mfg.	NE	Mfg.	NE
Model	BC 4	Model	Electra	Model	Electra
Serial #	704	Serial #	1260	Serial #	1672
Cal Due	10/30/02	Cal Due	8/27/02	Cal Due	8/26/02
Bkg	29.6 cpmb	Bkg	278 cpmβ	Bkg	352 cpmβ
Efficiency	25.00 %	Efficiency	28.40 %	Efficiency	31.00 %
MDA	200 dpmβ	MDA	283 dpmβ	MDA	290 dpmβ

Survey Type: Contamination- Radiation
Building: Solar Ponds
Location: Routine
Purpose: Recycle

RWP #: 02-Riss-020

Date: 8/6/02 Time: 15:00

[redacted]

PRN/REN # : NA
Comments: 100% Scan,swipes and pats.

SURVEY RESULTS

Swipe #	Location / Description Results in DPM/100sq.cm	Removable		Total	
		Alpha	Beta	Alpha	Beta
1	Metal Insulation	<20	<200	<34	<290
2	Metal Insulation	<20	<200	<34	<290
3	Metal Insulation	<20	<200	<34	<290
4	Metal Insulation	<20	<200	<34	<290
5	Metal Insulation	<20	<200	<34	<290
6	Metal Insulation	<20	<200	<34	<290
7	Metal Insulation	<20	<200	<34	<290
8	Metal Insulation	<20	< 200	<34	<290
9	Metal Insulation	<20	< 200	<34	<290
10	Metal Insulation	<20	< 200	<34	<290
11	Fiber Glass Insulation	<20	< 200	<34	<290
12	Fiber Glass Insulation	<20	< 200	<34	<290
13	Fiber Glass Insulation	<20	< 200	<34	<290
14	Fiber Glass Insulation	<20	< 200	<34	<290
15	Fiber Glass Insulation	<20	< 200	<34	<290
16	Fiber Glass Insulation	<20	<200	<34	<290
17	Fiber Glass Insulation	<20	<200	<34	<290
18	Fiber Glass Insulation	<20	<200	<34	<290
19	Fiber Glass Insulation	<20	<200	<34	<290
20	Fiber Glass Insulation	<20	<200	<34	<290
21	NA	NA	NA	NA	NA
22	NA	NA	NA	NA	NA
23	NA	NA	NA	NA	NA
24	NA	NA	NA	NA	NA
25	NA	NA	NA	NA	NA

MAP

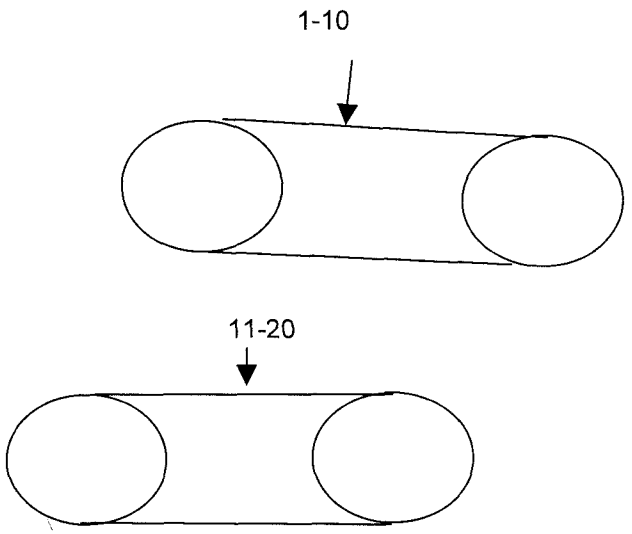

Date Reviewed: 8-21-02 **RS Supervision:** [redacted] / [redacted]
Print Name Signature

102

ROCKY FLATS ENVIRONMENTAL TECHNOLOGY SITE

INSTRUMENT DATA

Mfg.	Eberline	Mfg.	NE	Mfg.	NE
Model	SAC 4	Model	Electra	Model	Electra
Serial #	824	Serial #	1260	Serial #	1672
Cal Due	10/30/20	Cal Due	8/27/02	Cal Due	8/26/02
Bkg	0.1 cpmα	Bkg	0 cpmα	Bkg	1 cpmα
Efficiency	33.00 %	Efficiency	21.20 %	Efficiency	21.80 %
MDA	20 dpmα	MDA	13 dpmα	MDA	34 dpmα

Mfg.	Eberline	Mfg.	NE	Mfg.	NE
Model	BC 4	Model	Electra	Model	Electra
Serial #	704	Serial #	1260	Serial #	1672
Cal Due	10/30/02	Cal Due	8/27/02	Cal Due	8/26/02
Bkg	29.6 cpmb	Bkg	278 cpmβ	Bkg	352 cpmβ
Efficiency	25.00 %	Efficiency	28.40 %	Efficiency	31.00 %
MDA	200 dpmβ	MDA	283 dpmβ	MDA	290 dpmβ

Survey Type: Contamination- Radiation
Building: Solar Ponds
Location: Routine
Purpose: Recycle

RWP #: 02-Riss-020

Date: 8/6/02 Time: 15:00

[redacted]

PRN/REN # : NA
Comments: 100% Scan,swipes and pats.

SURVEY RESULTS

Swipe #	Location / Description Results in DPM/100sq.cm	Removable		Total	
		Alpha	Beta	Alpha	Beta
1	Metal Insulation	<20	<200	<34	<290
2	Metal Insulation	<20	<200	<34	<290
3	Metal Insulation	<20	<200	<34	<290
4	Metal Insulation	<20	<200	<34	<290
5	Metal Insulation	<20	<200	<34	<290
6	Metal Insulation	<20	<200	<34	<290
7	Metal Insulation	<20	<200	<34	<290
8	Metal Insulation	<20	< 200	<34	<290
9	Metal Insulation	<20	< 200	<34	<290
10	Metal Insulation	<20	< 200	<34	<290
11	Fiber Glass Insulation	<20	< 200	<34	<290
12	Fiber Glass Insulation	<20	< 200	<34	<290
13	Fiber Glass Insulation	<20	< 200	<34	<290
14	Fiber Glass Insulation	<20	< 200	<34	<290
15	Fiber Glass Insulation	<20	< 200	<34	<290
16	Fiber Glass Insulation	<20	<200	<34	<290
17	Fiber Glass Insulation	<20	<200	<34	<290
18	Fiber Glass Insulation	<20	<200	<34	<290
19	Fiber Glass Insulation	<20	<200	<34	<290
20	Fiber Glass Insulation	<20	<200	<34	<290
21	NA	NA	NA	NA	NA
22	NA	NA	NA	NA	NA
23	NA	NA	NA	NA	NA
24	NA	NA	NA	NA	NA
25	NA	NA	NA	NA	NA

MAP

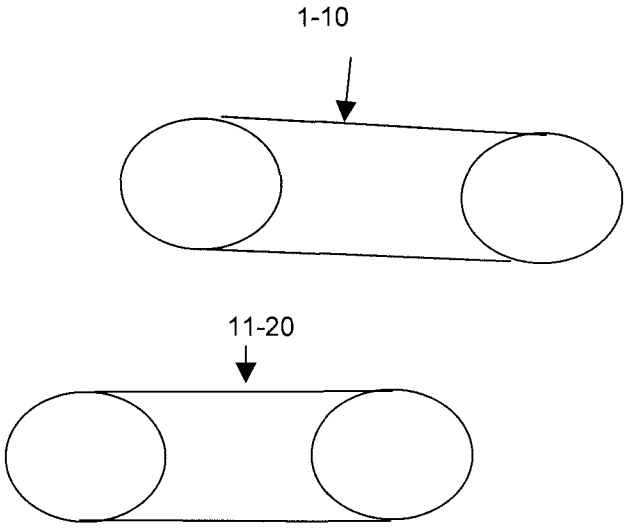

Date Reviewed: 8902 **RS Supervision:** S Gebhart [redacted]
Print Name Signature

103

ROCKY FLATS ENVIRONMENTAL TECHNOLOGY SITE

INSTRUMENT DATA

Mfg.	Eberline	Mfg.	NE	Mfg.	NE
Model	SAC 4	Model	Electra	Model	Electra
Serial #	824	Serial #	1260	Serial #	2344
Cal Due	10/30/02	Cal Due	8/27/02	Cal Due	1/17/03
Bkg	0.5 cpmα	Bkg	1 cpmα	Bkg	4 cpmα
Efficiency	33.00 %	Efficiency	21.20 %	Efficiency	22.20 %
MDA	20 dpmα	MDA	35 dpmα	MDA	54 dpmα

Mfg.	Eberline	Mfg.	NE	Mfg.	NE
Model	BC 4	Model	Electra	Model	Electra
Serial #	704	Serial #	1260	Serial #	2344
Cal Due	10/30/02	Cal Due	3/31/01	Cal Due	1/17/03
Bkg	35.2 cpmb	Bkg	287 cpmβ	Bkg	394 cpmβ
Efficiency	25.00 %	Efficiency	28.40 %	Efficiency	31.50 %
MDA	200 dpmβ	MDA	287 dpmβ	MDA	302 dpmβ

Survey Type: Contamination- Radiation
Building: Solar Ponds
Location: Between A and B Pads
Purpose: Recycle

RWP #: 02-Riss-020

Date: 8/5/02 Time: 15:00

[redacted]

PRN/REN # : NA
Comments: 100% Scan,swipes and pats.

SURVEY RESULTS

Swipe #	Location / Description Results in DPM/100sq.cm	Removable		Total	
		Alpha	Beta	Alpha	Beta
1	Concrete Pad	<20	<200	<54	<302
2	Concrete Pad	<20	<200	<54	<302
3	Concrete Pad	<20	<200	<54	<302
4	Concrete Pad	<20	<200	<54	<302
5	Concrete Pad	<20	<200	<54	<302
6	Concrete Pad	<20	<200	<54	<302
7	Concrete Pad	<20	<200	<54	<302
8	Concrete Pad	<20	< 200	<54	<302
9	Concrete Pad	<20	< 200	<54	<302
10	Concrete Pad	<20	< 200	<54	<302
11	NA	NA	NA	NA	NA
12	NA	NA	NA	NA	NA
13	NA	NA	NA	NA	NA
14	NA	NA	NA	NA	NA
15	NA	NA	NA	NA	NA
16	NA	NA	NA	NA	NA
17	NA	NA	NA	NA	NA
18	NA	NA	NA	NA	NA
19	NA	NA	NA	NA	NA
20	NA	NA	NA	NA	NA
21	NA	NA	NA	NA	NA
22	NA	NA	NA	NA	NA
23	NA	NA	NA	NA	NA
24	NA	NA	NA	NA	NA
25	NA	NA	NA	NA	NA

MAP

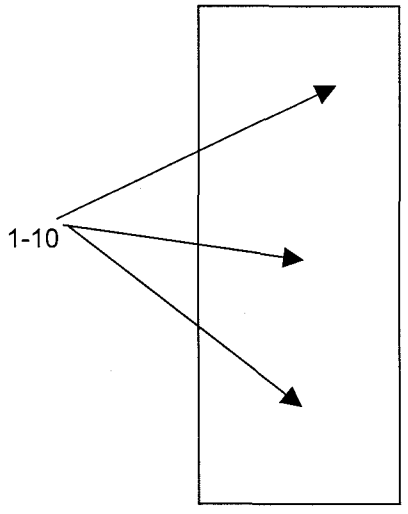

Date Reviewed: ~~8-7-02~~ 8-12-02 **RS Supervision:** James W Smith (Print Name) James W Smith (Signature) [redacted]

104

ROCKY FLATS ENVIRONMENTAL TECHNOLOGY SITE

INSTRUMENT DATA

Mfg.	Eberline	Mfg.	N/A	Mfg.	N/A	**Survey Type:**	Contamination, Radiation
Model	SAC 4	Model	N/A	Model	N/A	Building:	Solar Ponds
Serial #	824	Serial #	N/A	Serial #	N/A	Location:	Solar Ponds
Cal Due	10/30/02	Cal Due	N/A	Cal Due	N/A	Purpose:	sample survey
Bkg	0.1 cpmα	Bkg	N/A	Bkg	N/A		
Efficiency	33.00 %	Efficiency	N/A	Efficiency	N/A	RWP #:	NA
MDA	20 dpmα	MDA	N/A	MDA	N/A		
						Date:	8/5/02 Time: 15:00
Mfg.	Eberline	Mfg.	N/A	Mfg.	Bicron		[redacted]
Model	BC 4	Model	N/A	Model	μ rem		
Serial #	704	Serial #	N/A	Serial #	C244		
Cal Due	10/30/02	Cal Due	N/A	Cal Due	11/3/02		
Bkg	31.4 cpmβ	Bkg	N/A	Bkg	<10 μrem	RCT:	NA / NA / NA
Efficiency	25.00 %	Efficiency	N/A	Efficiency	N/A		Print name / Signature / Emp. #
MDA	200 dpmβ	MDA	N/A	MDA	<17 μrem		

PRN/REN # : 020626-T130C-002

Comments: NA

SURVEY RESULTS

Swipe #	Location / Description Results in DPM/100sq.cm	Removable Alpha	Removable Beta	Total Alpha	Total Beta	μrem/hr
1	02E0184-001.001	<20	<200	NA	NA	<17
2	02E0184-001.002	<20	<200	NA	NA	<17
3	02E0184-001.003	<20	<200	NA	NA	<17
4	02E0184-001.004	<20	<200	NA	NA	<17
5	02E0184-001.005	<20	<200	NA	NA	<17
6	02E0184-001.006	<20	<200	NA	NA	<17
7	02E0184-002.001	<20	<200	NA	NA	<17
8	02E0184-002.002	<20	<200	NA	NA	<17
9	outside bag	<20	<200	NA	NA	<17
10	outside bag	<20	<200	NA	NA	<17
11	outside bag	<20	<200	NA	NA	<17
12	outside bag	<20	<200	NA	NA	<17
13	outside bag	<20	<200	NA	NA	<17
14	outside bag	<20	<200	NA	NA	<17
15	outside bag	<20	<200	NA	NA	<17
16	outside bag	<20	<200	NA	NA	<17
17	NA	NA	NA	NA	NA	NA
18	NA	NA	NA	NA	NA	NA
19	NA	NA	NA	NA	NA	NA
20	NA	NA	NA	NA	NA	NA
21	NA	NA	NA	NA	NA	NA
22	NA	NA	NA	NA	NA	NA
23	NA	NA	NA	NA	NA	NA
24	NA	NA	NA	NA	NA	NA
25	NA	NA	NA	NA	NA	NA

MAP

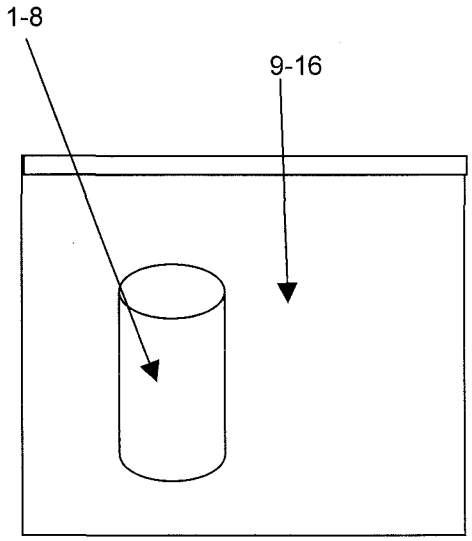

Date Reviewed: 8-8-02 **RS Supervision:** Teresa Johnston / Teresa Johnston [redacted]
Print Name Signature

ROCKY FLATS ENVIRONMENTAL TECHNOLOGY SITE

INSTRUMENT DATA

Mfg.	Eberline	Mfg.	N/A	Mfg.	N/A	**Survey Type:**	Contamination, Radiation
Model	SAC 4	Model	N/A	Model	N/A	Building:	Solar Ponds
Serial #	824	Serial #	N/A	Serial #	N/A	Location:	Solar Ponds
Cal Due	10/30/02	Cal Due	N/A	Cal Due	N/A	Purpose:	sample survey
Bkg	0.1 cpmα	Bkg	N/A	Bkg	N/A		
Efficiency	33.00 %	Efficiency	N/A	Efficiency	N/A	RWP #:	NA
MDA	20 dpmα	MDA	N/A	MDA	N/A		
						Date:	8/5/02 Time: 15:00
Mfg.	Eberline	Mfg.	N/A	Mfg.	Bicron		[redacted]
Model	BC 4	Model	N/A	Model	μ rem		
Serial #	704	Serial #	N/A	Serial #	C244		
Cal Due	10/30/02	Cal Due	N/A	Cal Due	11/3/02		
Bkg	31.4 cpmβ	Bkg	N/A	Bkg	<10 μrem	RCT:	NA / NA / NA
Efficiency	25.00 %	Efficiency	N/A	Efficiency	N/A		Print name Signature Emp. #
MDA	200 dpmβ	MDA	N/A	MDA	<17 μrem		

PRN/REN # : 020626-T130C-002

Comments: NA

SURVEY RESULTS

Swipe #	Location / Description Results in DPM/100sq.cm	Removable Alpha	Removable Beta	Total Alpha	Total Beta	μrem/hr
1	02E0184-001.001	<20	<200	NA	NA	<17
2	02E0184-001.002	<20	<200	NA	NA	<17
3	02E0184-001.003	<20	<200	NA	NA	<17
4	02E0184-001.004	<20	<200	NA	NA	<17
5	02E0184-001.005	<20	<200	NA	NA	<17
6	02E0184-001.006	<20	<200	NA	NA	<17
7	02E0184-002.001	<20	<200	NA	NA	<17
8	02E0184-002.002	<20	<200	NA	NA	<17
9	outside bag	<20	<200	NA	NA	<17
10	outside bag	<20	<200	NA	NA	<17
11	outside bag	<20	<200	NA	NA	<17
12	outside bag	<20	<200	NA	NA	<17
13	outside bag	<20	<200	NA	NA	<17
14	outside bag	<20	<200	NA	NA	<17
15	outside bag	<20	<200	NA	NA	<17
16	outside bag	<20	<200	NA	NA	<17
17	NA	NA	NA	NA	NA	NA
18	NA	NA	NA	NA	NA	NA
19	NA	NA	NA	NA	NA	NA
20	NA	NA	NA	NA	NA	NA
21	NA	NA	NA	NA	NA	NA
22	NA	NA	NA	NA	NA	NA
23	NA	NA	NA	NA	NA	NA
24	NA	NA	NA	NA	NA	NA
25	NA	NA	NA	NA	NA	NA

MAP

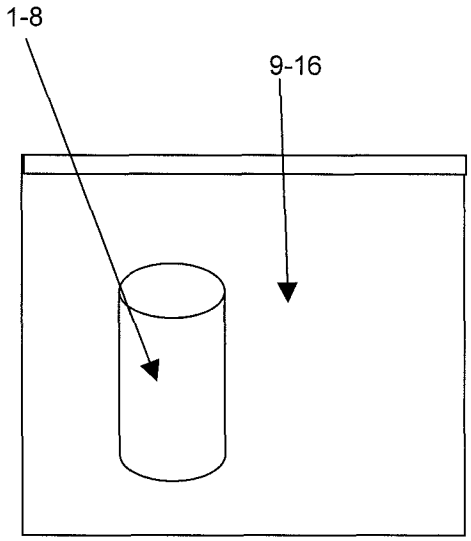

Date Reviewed: 8-26-02 **RS Supervision:** [redacted] / [redacted]
Print Name Signature

106

ROCKY FLATS ENVIRONMENTAL TECHNOLOGY SITE

INSTRUMENT DATA

Mfg.	Eberline	Mfg.	NE	Mfg.	NE
Model	SAC 4	Model	Electra	Model	Electra
Serial #	824	Serial #	1260	Serial #	2344
Cal Due	10/30/20	Cal Due	8/27/02	Cal Due	1/17/03
Bkg	0.1 cpmα	Bkg	1 cpmα	Bkg	4 cpmα
Efficiency	33.00 %	Efficiency	21.20 %	Efficiency	22.20 %
MDA	20 dpmα	MDA	35 dpmα	MDA	54 dpmα

Mfg.	Eberline	Mfg.	NE	Mfg.	NE
Model	BC 4	Model	Electra	Model	Electra
Serial #	704	Serial #	1260	Serial #	2344
Cal Due	10/30/02	Cal Due	8/27/02	Cal Due	1/17/03
Bkg	31.4 cpmb	Bkg	205 cpmβ	Bkg	353 cpmβ
Efficiency	25.00 %	Efficiency	28.40 %	Efficiency	31.50 %
MDA	200 dpmβ	MDA	244 dpmβ	MDA	286 dpmβ

Survey Type: Contamination- Radiation
Building: Solar Ponds
Location: Between A and B Pads
Purpose: Recycle

RWP #: 02-Riss-020

Date: 8/5/02 Time: 15:00

[redacted]

PRN/REN # : NA
Comments: 100% Scan,swipes and pats.

SURVEY RESULTS

Swipe #	Location / Description Results in DPM/100sq.cm	Removable Alpha	Removable Beta	Total Alpha	Total Beta
1	Concrete Pad	<20	<200	<54	<286
2	Concrete Pad	<20	<200	<54	<286
3	Concrete Pad	<20	<200	<54	<286
4	Concrete Pad	<20	<200	<54	<286
5	Concrete Pad	<20	<200	<54	<286
6	Concrete Pad	<20	<200	<54	<286
7	Concrete Pad	<20	<200	<54	<286
8	Concrete Pad	<20	< 200	<54	<286
9	Concrete Pad	<20	< 200	<54	<286
10	Concrete Pad	<20	< 200	<54	<286
11	NA	NA	NA	NA	NA
12	NA	NA	NA	NA	NA
13	NA	NA	NA	NA	NA
14	NA	NA	NA	NA	NA
15	NA	NA	NA	NA	NA
16	NA	NA	NA	NA	NA
17	NA	NA	NA	NA	NA
18	NA	NA	NA	NA	NA
19	NA	NA	NA	NA	NA
20	NA	NA	NA	NA	NA
21	NA	NA	NA	NA	NA
22	NA	NA	NA	NA	NA
23	NA	NA	NA	NA	NA
24	NA	NA	NA	NA	NA
25	NA	NA	NA	NA	NA

MAP

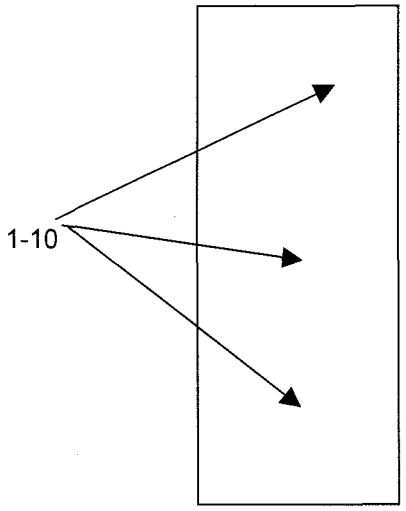

Date Reviewed: 8-9-02 **RS Supervision:** [signature] / [signature]
Print Name Signature

ROCKY FLATS ENVIRONMENTAL TECHNOLOGY SITE

INSTRUMENT DATA

	Eberline	Mfg.	NE	Mfg.	NE
Model	SAC 4	Model	Electra	Model	Electra
Serial #	824	Serial #	1260	Serial #	2344
Cal Due	10/30/02	Cal Due	08/27/02	Cal Due	1/17/03
Bkg	0.5 cpmα	Bkg	1 cpmα	Bkg	4 cpmα
Efficiency	33.00 %	Efficiency	21.20 %	Efficiency	22.20 %
MDA	20 dpmα	MDA	35 dpmα	MDA	54 dpmα
Mfg.	Eberline	Mfg.	NE	Mfg.	NE
Model	BC 4	Model	Electra	Model	Electra
Serial #	704	Serial #	1260	Serial #	2344
Cal Due	10/30/02	Cal Due	08/27/02	Cal Due	1/17/03
Bkg	35.2 cpmβ	Bkg	287 cpmβ	Bkg	394 cpmβ
Efficiency	25.00 %	Efficiency	28.40 %	Efficiency	31.50 %
MDA	200 dpmβ	MDA	287 dpmβ	MDA	302 dpmβ

Survey Type: Contamination
Building: Solar Ponds
Location: Solar Ponds
Purpose: End of Shift Survey

RWP #: 02-Riss-020

Date: 8/5/02 Time: 15:00

[redacted]

RCT: NA / NA / NA
Print name Signature Emp. #

PRN/REN # : NA
Comments: NA

SURVEY RESULTS

Swipe #	Location / Description Results in DPM/100sq.cm	Removable		Total	
		Alpha	Beta	Alpha	Beta
1	Teeth	< 20	< 200	<54	<302
2	I/S bucket	< 20	< 200	<54	<302
3	I/S bucket	< 20	< 200	<54	<302
4	O/S bucket	< 20	< 200	<54	<302
5	O/S bucket	< 20	< 200	<54	<302
6	END OF SURVEY	NA	NA	NA	NA
7	NA	NA	NA	NA	NA
8	NA	NA	NA	NA	NA
9	NA	NA	NA	NA	NA
10	NA	NA	NA	NA	NA
11	NA	NA	NA	NA	NA
12	NA	NA	NA	NA	NA
13	NA	NA	NA	NA	NA
14	NA	NA	NA	NA	NA
15	NA	NA	NA	NA	NA
16	NA	NA	NA	NA	NA
17	NA	NA	NA	NA	NA
18	NA	NA	NA	NA	NA
19	NA	NA	NA	NA	NA
20	NA	NA	NA	NA	NA
21	NA	NA	NA	NA	NA
22	NA	NA	NA	NA	NA
23	NA	NA	NA	NA	NA
24	NA	NA	NA	NA	NA
25	NA	NA	NA	NA	NA

MAP

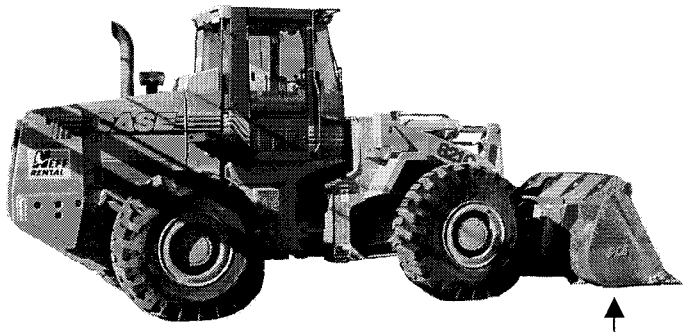

1-5

Date Reviewed: 8-21-02 **RS Supervision:** Steve Gernatt / [redacted]
Print Name Signature

ROCKY FLATS ENVIRONMENTAL TECHNOLOGY SITE

INSTRUMENT DATA

Mfg.	Eberline	Mfg.	NE	Mfg.	NE
Model	SAC 4	Model	Electra	Model	Electra
Serial #	824	Serial #	1260	Serial #	2344
Cal Due	10/30/20	Cal Due	8/27/02	Cal Due	1/17/03
Bkg	0.1 cpmα	Bkg	1 cpmα	Bkg	4 cpmα
Efficiency	33.00 %	Efficiency	21.20 %	Efficiency	22.20 %
MDA	20 dpmα	MDA	35 dpmα	MDA	54 dpmα

Mfg.	Eberline	Mfg.	NE	Mfg.	NE
Model	BC 4	Model	Electra	Model	Electra
Serial #	704	Serial #	1260	Serial #	2344
Cal Due	10/30/02	Cal Due	8/27/02	Cal Due	1/17/03
Bkg	31.4 cpmb	Bkg	205 cpmβ	Bkg	353 cpmβ
Efficiency	25.00 %	Efficiency	28.40 %	Efficiency	31.50 %
MDA	200 dpmβ	MDA	244 dpmβ	MDA	286 dpmβ

Survey Type: Contamination- Radiation
Building: Solar Ponds
Location: Routine
Purpose: Daily

RWP #: 02-Riss-020

Date: 8/5/02 Time: 15:00

[redacted]

PRN/REN # : NA
Comments: NA

SURVEY RESULTS

Swipe #	Location / Description Results in DPM/100sq.cm	Removable Alpha	Removable Beta	Total Alpha	Total Beta
1	Connex table	< 20	< 200	<54	<286
2	Connex table	< 20	< 200	<54	<286
3	Connex table	< 20	< 200	<54	<286
4	Connex table	< 20	< 200	<54	<286
5	Trash barrel, PPE barrel	< 20	< 200	<54	<286
6	Trash barrel, PPE barrel	< 20	< 200	<54	<286
7	Trash barrel, PPE barrel	< 20	< 200	<54	<286
8	Trash barrel, PPE barrel	< 20	< 200	<54	<286
9	Floor	< 20	< 200	<54	<286
10	Floor	< 20	< 200	<54	<286
11	Floor	< 20	< 200	<54	<286
12	Floor	< 20	< 200	<54	<286
13	Shelf	< 20	< 200	<54	<286
14	Shelf	< 20	< 200	<54	<286
15	Shelf	< 20	< 200	<54	<286
16	Shelf	< 20	< 200	<54	<286
17	NA	NA	NA	NA	NA
18	NA	NA	NA	NA	NA
19	NA	NA	NA	NA	NA
20	NA	NA	NA	NA	NA
21	NA	NA	NA	NA	NA
22	NA	NA	NA	NA	NA
23	NA	NA	NA	NA	NA
24	NA	NA	NA	NA	NA
25	NA	NA	NA	NA	NA

MAP

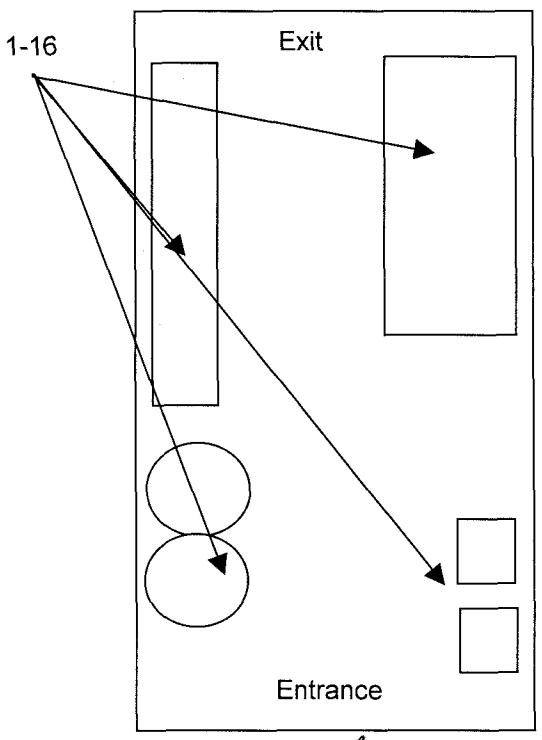

Date Reviewed: 8-9-02 **RS Supervision:** Steve Gernatt / [signature] /
Print Name Signature

[redacted]

ROCKY FLATS ENVIRONMENTAL TECHNOLOGY SITE

INSTRUMENT DATA

Mfg.	Eberline	Mfg.	NE	Mfg.	NE
Model	SAC 4	Model	Electra	Model	Electra
Serial #	824	Serial #	1260	Serial #	2344
Cal Due	10/30/20	Cal Due	8/27/02	Cal Due	1/17/03
Bkg	0.1 cpmα	Bkg	1 cpmα	Bkg	4 cpmα
Efficiency	33.00 %	Efficiency	21.20 %	Efficiency	22.20 %
MDA	20 dpmα	MDA	35 dpmα	MDA	54 dpmα

Mfg.	Eberline	Mfg.	NE	Mfg.	NE
Model	BC 4	Model	Electra	Model	Electra
Serial #	704	Serial #	1260	Serial #	2344
Cal Due	10/30/02	Cal Due	8/27/02	Cal Due	1/17/03
Bkg	31.4 cpmb	Bkg	205 cpmβ	Bkg	353 cpmβ
Efficiency	25.00 %	Efficiency	28.40 %	Efficiency	31.50 %
MDA	200 dpmβ	MDA	244 dpmβ	MDA	286 dpmβ

Survey Type: Contamination- Radiation
Building: Solar Ponds
Location: Routine
Purpose: Daily
RWP #: 02-Riss-020
Date: 8/5/02 Time: 15:00

[redacted]

PRN/REN # : NA
Comments: NA

SURVEY RESULTS

Swipe #	Location / Description Results in DPM/100sq.cm	Removable		Total	
		Alpha	Beta	Alpha	Beta
1	finger	<20	<200	<54	<286
2	finger	<20	<200	<54	<286
3	finger	<20	<200	<54	<286
4	finger	<20	<200	<54	<286
5	finger	<20	<200	<54	<286
6	tracks	<20	<200	<54	<286
7	tracks	<20	<200	<54	<286
8	tracks	<20	< 200	<54	<286
9	tracks	<20	< 200	<54	<286
10	tracks	<20	< 200	<54	<286
11	tracks	<20	< 200	<54	<286
12	tracks	<20	< 200	<54	<286
13	tracks	<20	< 200	<54	<286
14	tracks	<20	< 200	<54	<286
15	tracks	<20	< 200	<54	<286
16	cab	<20	<200	<54	<286
17	cab	<20	<200	<54	<286
18	NA	NA	NA	NA	NA
19	NA	NA	NA	NA	NA
20	NA	NA	NA	NA	NA
21	NA	NA	NA	NA	NA
22	NA	NA	NA	NA	NA
23	NA	NA	NA	NA	NA
24	NA	NA	NA	NA	NA
25	NA	NA	NA	NA	NA

MAP

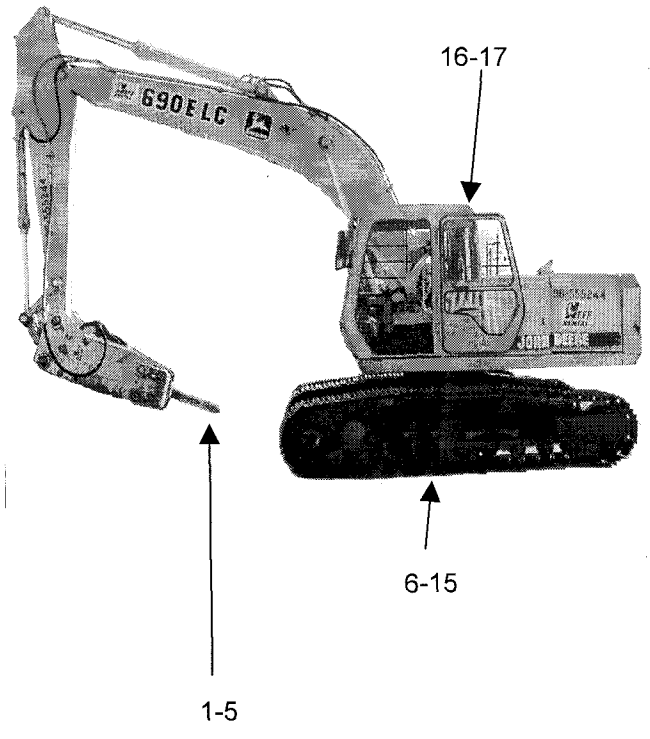

Date Reviewed: 8-9-02 **RS Supervision:** [redacted]
Print Name Signature

ROCKY FLATS ENVIRONMENTAL TECHNOLOGY SITE

INSTRUMENT DATA

Mfg.	Eberline	Mfg.	NE	Mfg.	NE
Model	SAC 4	Model	Electra	Model	Electra
Serial #	824	Serial #	1260	Serial #	2344
Cal Due	10/30/02	Cal Due	8/27/02	Cal Due	1/17/03
Bkg	0.5 cpmα	Bkg	1 cpmα	Bkg	4 cpmα
Efficiency	33.00 %	Efficiency	21.20 %	Efficiency	22.20 %
MDA	20 dpmα	MDA	35 dpmα	MDA	54 dpmα

Mfg.	Eberline	Mfg.	NE	Mfg.	NE
Model	BC 4	Model	Electra	Model	Electra
Serial #	704	Serial #	1260	Serial #	2344
Cal Due	10/30/02	Cal Due	3/31/01	Cal Due	1/17/03
Bkg	35.2 cpmb	Bkg	287 cpmβ	Bkg	394 cpmβ
Efficiency	25.00 %	Efficiency	28.40 %	Efficiency	31.50 %
MDA	200 dpmβ	MDA	287 dpmβ	MDA	302 dpmβ

Survey Type: Contamination- Radiation
Building: Solar Ponds
Location: Routine
Purpose: Daily

RWP #: 02-Riss-020

Date: 8/5/02 Time: 15:00

[redacted]

PRN/REN # : NA
Comments: NA

SURVEY RESULTS

Swipe #	Location / Description Results in DPM/100sq.cm	Removable		Total	
		Alpha	Beta	Alpha	Beta
1	finger	<20	<200	<54	<302
2	finger	<20	<200	<54	<302
3	finger	<20	<200	<54	<302
4	finger	<20	<200	<54	<302
5	finger	<20	<200	<54	<302
6	tracks	<20	<200	<54	<302
7	tracks	<20	<200	<54	<302
8	tracks	<20	< 200	<54	<302
9	tracks	<20	< 200	<54	<302
10	tracks	<20	< 200	<54	<302
11	tracks	<20	< 200	<54	<302
12	tracks	<20	< 200	<54	<302
13	tracks	<20	< 200	<54	<302
14	tracks	<20	< 200	<54	<302
15	tracks	<20	< 200	<54	<302
16	cab	<20	<200	<54	<302
17	cab	<20	<200	<54	<302
18	NA	NA	NA	NA	NA
19	NA	NA	NA	NA	NA
20	NA	NA	NA	NA	NA
21	NA	NA	NA	NA	NA
22	NA	NA	NA	NA	NA
23	NA	NA	NA	NA	NA
24	NA	NA	NA	NA	NA
25	NA	NA	NA	NA	NA

MAP

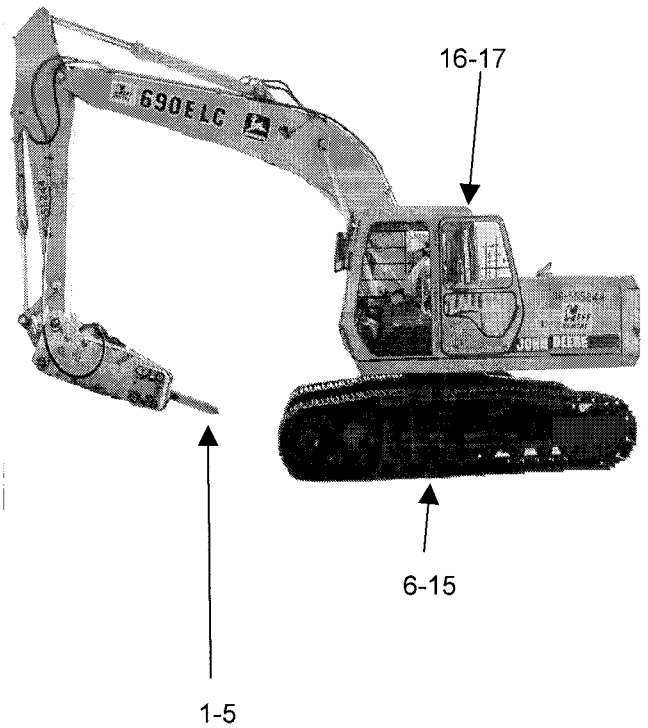

Date Reviewed: 8-12-02 **RS Supervision:** James W Smith (James W Smith) [redacted]
Print Name Signature

ROCKY FLATS ENVIRONMENTAL TECHNOLOGY SITE

INSTRUMENT DATA

Mfg.	Eberline	Mfg.	NE	Mfg.	NE
Model	SAC 4	Model	Electra	Model	Electra
Serial #	824	Serial #	1260	Serial #	2344
Cal Due	10/30/02	Cal Due	8/27/02	Cal Due	1/17/03
Bkg	0.5 cpmα	Bkg	1 cpmα	Bkg	4 cpmα
Efficiency	33.00 %	Efficiency	21.20 %	Efficiency	22.20 %
MDA	20 dpmα	MDA	35 dpmα	MDA	54 dpmα

Mfg.	Eberline	Mfg.	NE	Mfg.	NE
Model	BC 4	Model	Electra	Model	Electra
Serial #	704	Serial #	1260	Serial #	2344
Cal Due	10/30/02	Cal Due	3/31/01	Cal Due	1/17/03
Bkg	35.2 cpmb	Bkg	287 cpmβ	Bkg	394 cpmβ
Efficiency	25.00 %	Efficiency	28.40 %	Efficiency	31.50 %
MDA	200 dpmβ	MDA	287 dpmβ	MDA	302 dpmβ

Survey Type: Contamination- Radiation
Building: Solar Ponds
Location: Routine
Purpose: Daily
RWP #: 02-Riss-020
Date: 8/5/02 Time: 15:00

[redacted]

PRN/REN # : NA
Comments: NA

SURVEY RESULTS

Swipe #	Location / Description Results in DPM/100sq.cm	Removable Alpha	Removable Beta	Total Alpha	Total Beta
1	Connex table	< 20	< 200	<54	<302
2	Connex table	< 20	< 200	<54	<302
3	Connex table	< 20	< 200	<54	<302
4	Connex table	< 20	< 200	<54	<302
5	Trash barrel, PPE barrel	< 20	< 200	<54	<302
6	Trash barrel, PPE barrel	< 20	< 200	<54	<302
7	Trash barrel, PPE barrel	< 20	< 200	<54	<302
8	Trash barrel, PPE barrel	< 20	< 200	<54	<302
9	Floor	< 20	< 200	<54	<302
10	Floor	< 20	< 200	<54	<302
11	Floor	< 20	< 200	<54	<302
12	Floor	< 20	< 200	<54	<302
13	Shelf	< 20	< 200	<54	<302
14	Shelf	< 20	< 200	<54	<302
15	Shelf	< 20	< 200	<54	<302
16	Shelf	< 20	< 200	<54	<302
17	NA	NA	NA	NA	NA
18	NA	NA	NA	NA	NA
19	NA	NA	NA	NA	NA
20	NA	NA	NA	NA	NA
21	NA	NA	NA	NA	NA
22	NA	NA	NA	NA	NA
23	NA	NA	NA	NA	NA
24	NA	NA	NA	NA	NA
25	NA	NA	NA	NA	NA

MAP

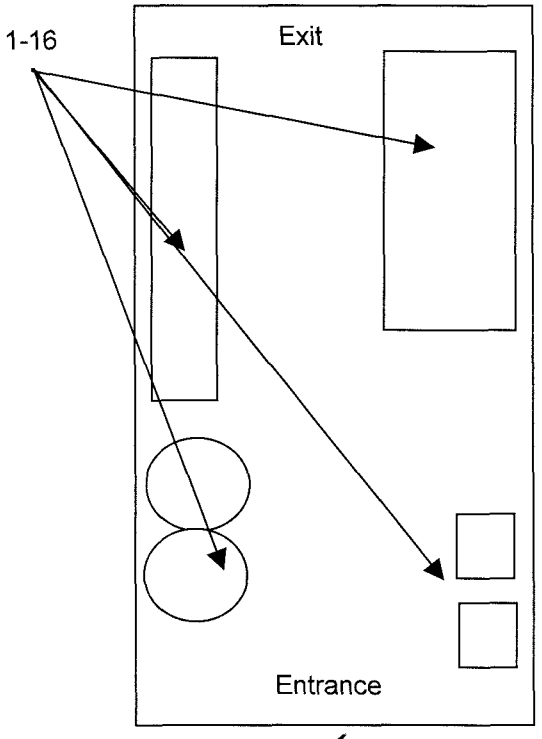

Date Reviewed: 8-21-02 **RS Supervision:** Steve Gernatt [redacted]
Print Name Signature

ROCKY FLATS ENVIRONMENTAL TECHNOLOGY SITE

INSTRUMENT DATA

Mfg.	Eberline	Mfg.	N/A	Mfg.	N/A	**Survey Type:**	Contamination, Radiation
Model	SAC 4	Model	N/A	Model	N/A	Building:	Solar Ponds
Serial #	824	Serial #	N/A	Serial #	N/A	Location:	Solar Ponds
Cal Due	10/30/02	Cal Due	N/A	Cal Due	N/A	Purpose:	sample survey
Bkg	0.1 cpmα	Bkg	N/A	Bkg	N/A		
Efficiency	33.00 %	Efficiency	N/A	Efficiency	N/A	RWP #:	NA
MDA	20 dpmα	MDA	N/A	MDA	N/A		

Date: 8/2/02 Time: 15:00

Mfg.	Eberline	Mfg.	N/A	Mfg.	Bicron
Model	BC 4	Model	N/A	Model	μ rem
Serial #	704	Serial #	N/A	Serial #	B982H
Cal Due	10/30/02	Cal Due	N/A	Cal Due	8/7/02
Bkg	32 cpmβ	Bkg	N/A	Bkg	<10 μrem
Efficiency	25.00 %	Efficiency	N/A	Efficiency	N/A
MDA	200 dpmβ	MDA	N/A	MDA	<17 μrem

[redacted]

PRN/REN # : 020626-T130C-002

Comments: NA

SURVEY RESULTS

Swipe #	Location / Description Results in DPM/100sq.cm	Removable Alpha	Removable Beta	Total Alpha	Total Beta	μrem/hr
1	02E0181-001.001	<20	<200	NA	NA	<17
2	02E0181-001.002	<20	<200	NA	NA	<17
3	02E0181-001.003	<20	<200	NA	NA	<17
4	02E0181-001.004	<20	<200	NA	NA	<17
5	02E0181-001.005	<20	<200	NA	NA	<17
6	02E0181-001.006	<20	<200	NA	NA	<17
7	02E0181-002.001	<20	<200	NA	NA	<17
8	02E0181-002.002	<20	<200	NA	NA	<17
9	outside bag	<20	<200	NA	NA	<17
10	outside bag	<20	<200	NA	NA	<17
11	outside bag	<20	<200	NA	NA	<17
12	outside bag	<20	<200	NA	NA	<17
13	outside bag	<20	<200	NA	NA	<17
14	outside bag	<20	<200	NA	NA	<17
15	outside bag	<20	<200	NA	NA	<17
16	outside bag	<20	<200	NA	NA	<17
17	NA	NA	NA	NA	NA	NA
18	NA	NA	NA	NA	NA	NA
19	NA	NA	NA	NA	NA	NA
20	NA	NA	NA	NA	NA	NA
21	NA	NA	NA	NA	NA	NA
22	NA	NA	NA	NA	NA	NA
23	NA	NA	NA	NA	NA	NA
24	NA	NA	NA	NA	NA	NA
25	NA	NA	NA	NA	NA	NA

MAP

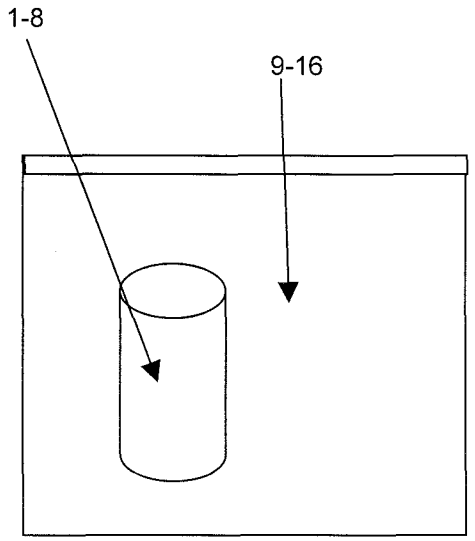

Date Reviewed: 8-3-02 **RS Supervision:** S Gerhart / [signature]

Print Name Signature

ROCKY FLATS ENVIRONMENTAL TECHNOLOGY SITE

INSTRUMENT DATA

Mfg.	Eberline	Mfg.	NE	Mfg.	NE
Model	SAC 4	Model	Electra	Model	Electra
Serial #	824	Serial #	1260	Serial #	2394
Cal Due	10/30/02	Cal Due	8/27/02	Cal Due	9/26/02
Bkg	0.1 cpmα	Bkg	1 cpmα	Bkg	4 cpmα
Efficiency	33.00 %	Efficiency	21.20 %	Efficiency	22.10 %
MDA	20 dpmα	MDA	35 dpmα	MDA	54 dpmα

Mfg.	Eberline	Mfg.	NE	Mfg.	NE
Model	BC 4	Model	Electra	Model	Electra
Serial #	704	Serial #	1260	Serial #	2394
Cal Due	10/30/02	Cal Due	3/31/01	Cal Due	9/26/02
Bkg	32 cpmb	Bkg	308 cpmβ	Bkg	313 cpmβ
Efficiency	25.00 %	Efficiency	28.40 %	Efficiency	29.80 %
MDA	200 dpmβ	MDA	297 dpmβ	MDA	285 dpmβ

Survey Type: Contamination- Radiation
Building: Solar Ponds
Location: Routine
Purpose: Daily

RWP #: 02-Riss-020

Date: 8/2/02 Time: 15:00

[redacted]

PRN/REN # : NA
Comments: NA

SURVEY RESULTS

Swipe #	Location / Description Results in DPM/100sq.cm	Removable		Total	
		Alpha	Beta	Alpha	Beta
1	front bucket	< 20	< 200	<54	< 297
2	front bucket	< 20	< 200	<54	< 297
3	front bucket	< 20	< 200	<54	< 297
4	front bucket	< 20	< 200	<54	< 297
5	rear bucket	< 20	< 200	<54	< 297
6	rear bucket	< 20	< 200	<54	< 297
7	rear bucket	< 20	< 200	<54	< 297
8	rear bucket	< 20	< 200	<54	< 297
9	NA	NA	NA	NA	NA
10	NA	NA	NA	NA	NA
11	NA	NA	NA	NA	NA
12	NA	NA	NA	NA	NA
13	NA	NA	NA	NA	NA
14	NA	NA	NA	NA	NA
15	NA	NA	NA	NA	NA
16	NA	NA	NA	NA	NA
17	NA	NA	NA	NA	NA
18	NA	NA	NA	NA	NA
19	NA	NA	NA	NA	NA
20	NA	NA	NA	NA	NA
21	NA	NA	NA	NA	NA
22	NA	NA	NA	NA	NA
23	NA	NA	NA	NA	NA
24	NA	NA	NA	NA	NA
25	NA	NA	NA	NA	NA

MAP

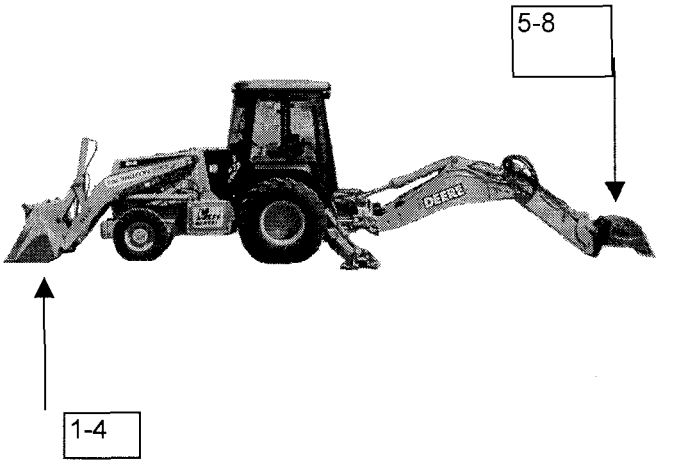

Date Reviewed: 8/2/02 **RS Supervision:** Steve Gernatt / [redacted] /
Print Name Signature

ROCKY FLATS ENVIRONMENTAL TECHNOLOGY SITE

INSTRUMENT DATA

Mfg.	Eberline	Mfg.	NE	Mfg.	NE
Model	SAC 4	Model	Electra	Model	Electra
Serial #	824	Serial #	1260	Serial #	2394
Cal Due	10/30/02	Cal Due	8/27/02	Cal Due	9/26/02
Bkg	0.1 cpmα	Bkg	1 cpmα	Bkg	4 cpmα
Efficiency	33.00 %	Efficiency	21.20 %	Efficiency	22.10 %
MDA	20 dpmα	MDA	35 dpmα	MDA	54 dpmα

Mfg.	Eberline	Mfg.	NE	Mfg.	NE
Model	BC 4	Model	Electra	Model	Electra
Serial #	704	Serial #	1260	Serial #	2394
Cal Due	10/30/02	Cal Due	3/31/01	Cal Due	9/26/02
Bkg	32 cpmb	Bkg	308 cpmβ	Bkg	313 cpmβ
Efficiency	25.00 %	Efficiency	28.40 %	Efficiency	29.80 %
MDA	200 dpmβ	MDA	297 dpmβ	MDA	285 dpmβ

Survey Type: Contamination- Radiation
Building: Solar Ponds
Location: Routine
Purpose: Daily
RWP #: 02-Riss-020
Date: 8/2/02 Time: 15:00

[redacted]

PRN/REN # : NA
Comments: NA

SURVEY RESULTS

Swipe #	Location / Description Results in DPM/100sq.cm	Removable Alpha	Removable Beta	Total Alpha	Total Beta
1	Connex table	< 20	< 200	<54	< 297
2	Connex table	< 20	< 200	<54	< 297
3	Connex table	< 20	< 200	<54	< 297
4	Connex table	< 20	< 200	<54	< 297
5	Trash barrel, PPE barrel	< 20	< 200	<54	< 297
6	Trash barrel, PPE barrel	< 20	< 200	<54	< 297
7	Trash barrel, PPE barrel	< 20	< 200	<54	< 297
8	Trash barrel, PPE barrel	< 20	< 200	<54	< 297
9	Floor	NA	NA	NA	NA
10	Floor	NA	NA	NA	NA
11	Floor	NA	NA	NA	NA
12	Floor	NA	NA	NA	NA
13	Shelf	NA	NA	NA	NA
14	Shelf	NA	NA	NA	NA
15	Shelf	NA	NA	NA	NA
16	Shelf	NA	NA	NA	NA
17	NA	NA	NA	NA	NA
18	NA	NA	NA	NA	NA
19	NA	NA	NA	NA	NA
20	NA	NA	NA	NA	NA
21	NA	NA	NA	NA	NA
22	NA	NA	NA	NA	NA
23	NA	NA	NA	NA	NA
24	NA	NA	NA	NA	NA
25	NA	NA	NA	NA	NA

MAP

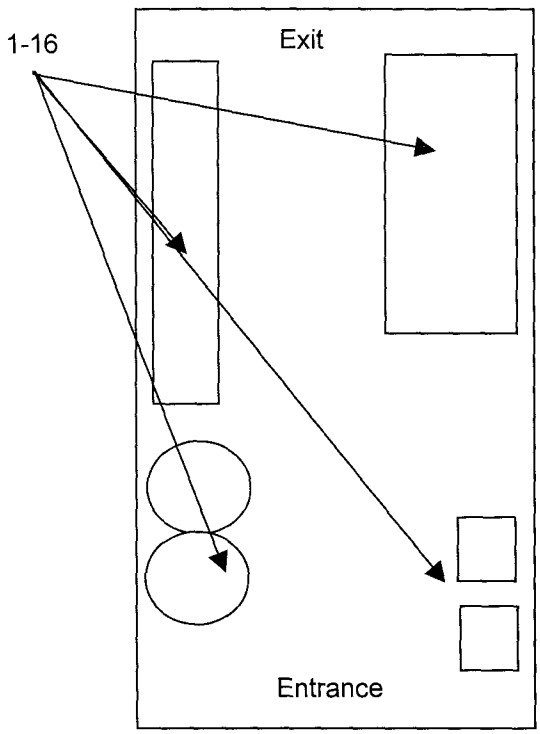

Date Reviewed: 8-25-02 **RS Supervision:** Steve Gernatt [redacted]
Print Name Signature

ROCKY FLATS ENVIRONMENTAL TECHNOLOGY SITE

INSTRUMENT DATA

Mfg.	Eberline	Mfg.	NE	Mfg.	NE
Model	SAC 4	Model	Electra	Model	Electra
Serial #	824	Serial #	1260	Serial #	2394
Cal Due	10/30/02	Cal Due	8/27/02	Cal Due	9/26/02
Bkg	0.1 cpmα	Bkg	1 cpmα	Bkg	4 cpmα
Efficiency	33.00 %	Efficiency	21.20 %	Efficiency	22.10 %
MDA	20 dpmα	MDA	35 dpmα	MDA	54 dpmα

Mfg.	Eberline	Mfg.	NE	Mfg.	NE
Model	BC 4	Model	Electra	Model	Electra
Serial #	704	Serial #	1260	Serial #	2394
Cal Due	10/30/02	Cal Due	3/31/01	Cal Due	9/26/02
Bkg	32 cpmb	Bkg	308 cpmβ	Bkg	313 cpmβ
Efficiency	25.00 %	Efficiency	28.40 %	Efficiency	29.80 %
MDA	200 dpmβ	MDA	297 dpmβ	MDA	285 dpmβ

Survey Type: Contamination- Radiation
Building: Solar Ponds
Location: General Area
Purpose: Daily

RWP #: 02-Riss-020

Date: 8/2/02 Time: 15:00

[redacted]

PRN/REN # : NA
Comments: Sanitary waste survey of asphalt 100% top and bottom.

SURVEY RESULTS

Swipe #	Location / Description Results in DPM/100sq.cm	Removable		Total	
		Alpha	Beta	Alpha	Beta
1	Asphalt	<20	<200	<54	< 297
2	Asphalt	<20	<200	<54	< 297
3	Asphalt	<20	<200	<54	< 297
4	Asphalt	<20	<200	<54	< 297
5	Asphalt	<20	<200	<54	< 297
6	Asphalt	<20	<200	<54	< 297
7	Asphalt	<20	<200	<54	< 297
8	Asphalt	<20	<200	<54	< 297
9	Asphalt	<20	<200	<54	< 297
10	Asphalt	<20	<200	<54	< 297
11	Asphalt	<20	<200	<54	< 297
12	Asphalt	<20	<200	<54	< 297
13	Asphalt	<20	<200	<54	< 297
14	Asphalt	<20	<200	<54	< 297
15	Asphalt	<20	<200	<54	< 297
16	Asphalt	<20	<200	<54	< 297
17	Asphalt	<20	<200	<54	< 297
18	Asphalt	<20	<200	<54	< 297
19	Asphalt	<20	<200	<54	< 297
20	Asphalt	<20	<200	<54	< 297
21	NA	NA	NA	NA	NA
22	NA	NA	NA	NA	NA
23	NA	NA	NA	NA	NA
24	NA	NA	NA	NA	NA
25	NA	NA	NA	NA	NA

Map

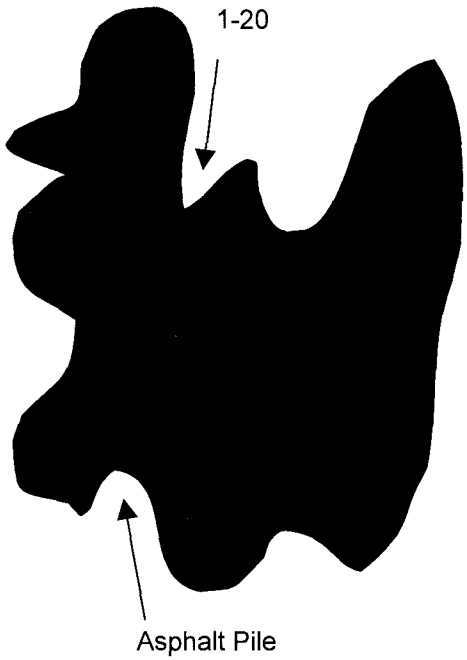

Date Reviewed: 8-15-02 **RS Supervision:** S Gerhart / [redacted]
Print Name Signature

ROCKY FLATS ENVIRONMENTAL TECHNOLOGY SITE

INSTRUMENT DATA

Mfg.	Eberline	Mfg.	NE	Mfg.	N/A
Model	SAC 4	Model	Electra	Model	N/A
Serial #	824	Serial #	1260	Serial #	N/A
Cal Due	10/30/20	Cal Due	8/27/02	Cal Due	N/A
Bkg	0.1 cpmα	Bkg	1 cpmα	Bkg	N/A
Efficiency	33.00 %	Efficiency	21.20 %	Efficiency	N/A
MDA	20 dpmα	MDA	35 dpmα	MDA	N/A

Mfg.	Eberline	Mfg.	NE	Mfg.	Bicron
Model	BC 4	Model	Electra	Model	μ rem
Serial #	704	Serial #	1260	Serial #	B710T
Cal Due	10/30/02	Cal Due	3/31/01	Cal Due	11/29/02
Bkg	32 cpmb	Bkg	254 cpmβ	Bkg	<10 μrem
Efficiency	25.00 %	Efficiency	28.40 %	Efficiency	N/A
MDA	200 dpmβ	MDA	270 dpmβ	MDA	<17 μrem

Survey Type: Contamination- Radiation
Building: 991
Location: General Area/Connex Complex
Purpose: Daily
RWP #: NA
Date: 8/1/02 Time: 15:00
[redacted]
RCT: NA / NA / NA
Print name Signature Emp. #

PRN/REN # : NA
Comments: NA

SURVEY RESULTS

Swipe #	Location / Description Results in DPM/100sq.cm	Removable Alpha	Removable Beta	Dose Rate micro rem/hr
1	Connex Inside	<20	<200	<17
2	Connex Inside	<20	<200	<17
3	Connex Inside	<20	<200	<17
4	Connex Inside	<20	<200	<17
5	Connex Inside	<20	<200	<17
6	Connex Inside	<20	<200	<17
7	Connex Inside	<20	<200	<17
8	Connex Inside	<20	<200	<17
9	Connex Inside	<20	<200	<17
10	Connex Inside	<20	<200	<17
11	Connex Inside	<20	<200	<17
12	Connex Inside	<20	<200	<17
13	Connex Inside	<20	<200	<17
14	Connex Inside	<20	<200	<17
15	Connex Inside	<20	<200	<17
16	Connex Outside	<20	<200	<17
17	Connex Outside	<20	<200	<17
18	Connex Outside	<20	<200	<17
19	Connex Outside	<20	<200	<17
20	Connex Outside	<20	<200	<17
21	Connex Outside	<20	<200	<17
22	Connex Outside	<20	<200	<17
23	Connex Outside	<20	<200	<17
24	Connex Outside	<20	<200	<17
25	Connex Outside	<20	<200	<17

Map

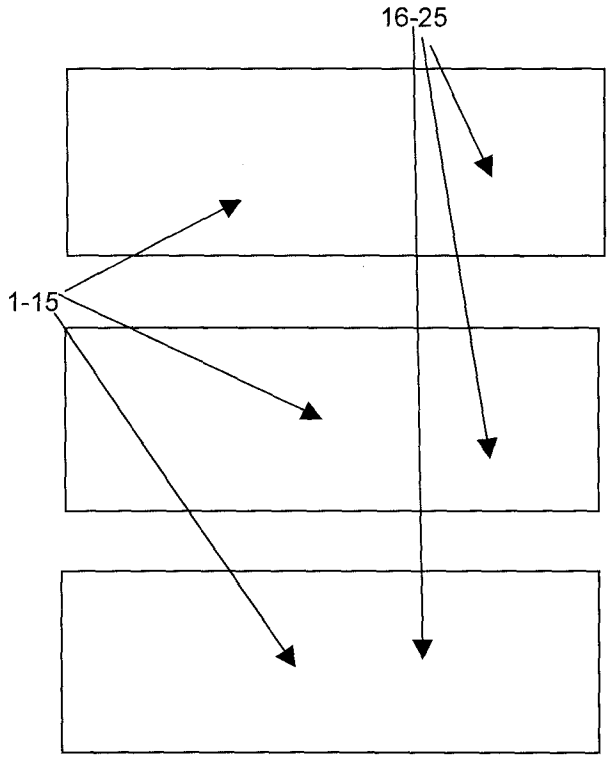

Date Reviewed: 8-4-02 **RS Supervision:** Steve Gernatt / [signature] / [redacted]
Print Name Signature

ROCKY FLATS ENVIRONMENTAL TECHNOLOGY SITE

INSTRUMENT DATA

Mfg.	Eberline	Mfg.	NE	Mfg.	NE
Model	SAC 4	Model	Electra	Model	Electra
Serial #	824	Serial #	1260	Serial #	2394
Cal Due	10/30/02	Cal Due	8/27/02	Cal Due	9/26/02
Bkg	0.1 cpmα	Bkg	1 cpmα	Bkg	2 cpmα
Efficiency	33.00 %	Efficiency	21.20 %	Efficiency	22.10 %
MDA	20 dpmα	MDA	35 dpmα	MDA	42 dpmα

Mfg.	Eberline	Mfg.	NE	Mfg.	NE
Model	BC 4	Model	Electra	Model	Electra
Serial #	704	Serial #	1260	Serial #	2394
Cal Due	10/30/02	Cal Due	3/31/01	Cal Due	9/26/02
Bkg	32 cpmb	Bkg	254 cpmβ	Bkg	344 cpmβ
Efficiency	25.00 %	Efficiency	28.40 %	Efficiency	29.80 %
MDA	200 dpmβ	MDA	270 dpmβ	MDA	299 dpmβ

Survey Type: Contamination- Radiation
Building: Solar Ponds
Location: Routine
Purpose: Daily

RWP #: 02-Riss-020

Date: 8/1/02 Time: 15:00

[redacted]

PRN/REN # : NA
Comments: NA

SURVEY RESULTS

Swipe #	Location / Description Results in DPM/100sq.cm	Removable		Total	
		Alpha	Beta	Alpha	Beta
1	front bucket	< 20	< 200	<42	< 299
2	front bucket	< 20	< 200	<42	< 299
3	front bucket	< 20	< 200	<42	< 299
4	front bucket	< 20	< 200	<42	< 299
5	rear bucket	< 20	< 200	<42	< 299
6	rear bucket	< 20	< 200	<42	< 299
7	rear bucket	< 20	< 200	<42	< 299
8	rear bucket	< 20	< 200	<42	< 299
9	NA	NA	NA	NA	NA
10	NA	NA	NA	NA	NA
11	NA	NA	NA	NA	NA
12	NA	NA	NA	NA	NA
13	NA	NA	NA	NA	NA
14	NA	NA	NA	NA	NA
15	NA	NA	NA	NA	NA
16	NA	NA	NA	NA	NA
17	NA	NA	NA	NA	NA
18	NA	NA	NA	NA	NA
19	NA	NA	NA	NA	NA
20	NA	NA	NA	NA	NA
21	NA	NA	NA	NA	NA
22	NA	NA	NA	NA	NA
23	NA	NA	NA	NA	NA
24	NA	NA	NA	NA	NA
25	NA	NA	NA	NA	NA

MAP

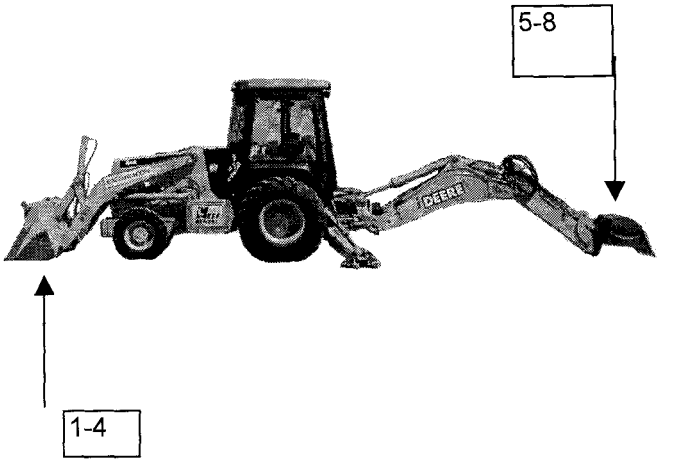

Date Reviewed: 8/2/02 **RS Supervision:** Steve Gernatt [redacted]
Print Name Signature

ROCKY FLATS ENVIRONMENTAL TECHNOLOGY SITE

INSTRUMENT DATA

Mfg.	Eberline	Mfg.	NE	Mfg.	NE
Model	SAC 4	Model	Electra	Model	Electra
Serial #	824	Serial #	1260	Serial #	2394
Cal Due	10/30/02	Cal Due	8/27/02	Cal Due	9/26/02
Bkg	0.1 cpmα	Bkg	1 cpmα	Bkg	2 cpmα
Efficiency	33.00 %	Efficiency	21.20 %	Efficiency	22.10 %
MDA	20 dpmα	MDA	35 dpmα	MDA	42 dpmα

Mfg.	Eberline	Mfg.	NE	Mfg.	NE
Model	BC 4	Model	Electra	Model	Electra
Serial #	704	Serial #	1260	Serial #	2394
Cal Due	10/30/02	Cal Due	3/31/01	Cal Due	9/26/02
Bkg	32 cpmb	Bkg	254 cpmβ	Bkg	344 cpmβ
Efficiency	25.00 %	Efficiency	28.40 %	Efficiency	29.80 %
MDA	200 dpmβ	MDA	270 dpmβ	MDA	299 dpmβ

Survey Type: Contamination- Radiation
Building: Solar Ponds
Location: General Area
Purpose: Daily

RWP #: 02-Riss-020

Date: 8/1/02 Time: 15:00

[redacted]

PRN/REN # : NA
Comments: NA

SURVEY RESULTS

Swipe #	Location / Description Results in DPM/100sq.cm	Removable		Total	
		Alpha	Beta	Alpha	Beta
1	Inside pipe	<20	<200	<42	< 299
2	Inside pipe	<20	<200	<42	< 299
3	Inside pipe	<20	<200	<42	< 299
4	Inside pipe	<20	<200	<42	< 299
5	Inside pipe	<20	<200	<42	< 299
6	Outside Pipe	<20	<200	<42	< 299
7	Outside Pipe	<20	<200	<42	< 299
8	Outside Pipe	<20	<200	<42	< 299
9	Outside Pipe	<20	<200	<42	< 299
10	Outside Pipe	<20	<200	<42	< 299
11	NA	NA	NA	NA	NA
12	NA	NA	NA	NA	NA
13	NA	NA	NA	NA	NA
14	NA	NA	NA	NA	NA
15	NA	NA	NA	NA	NA
16	NA	NA	NA	NA	NA
17	NA	NA	NA	NA	NA
18	NA	NA	NA	NA	NA
19	NA	NA	NA	NA	NA
20	NA	NA	NA	NA	NA
21	NA	NA	NA	NA	NA
22	NA	NA	NA	NA	NA
23	NA	NA	NA	NA	NA
24	NA	NA	NA	NA	NA
25	NA	NA	NA	NA	NA

Map

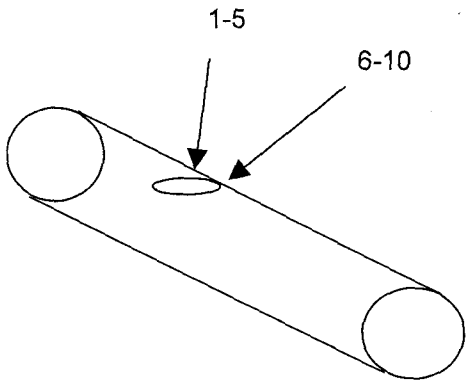

Date Reviewed: 8/2/02 **RS Supervision:** [redacted]
Print Name Signature

ROCKY FLATS ENVIRONMENTAL TECHNOLOGY SITE

INSTRUMENT DATA

Mfg.	Eberline	Mfg.	NE Electra	Mfg.	NE Electra
Model	SAC-4	Model	DP-6	Model	DP-6
Serial #	824	Serial #	2394	Serial #	3110
Cal Due	10/1/02	Cal Due	3/5/03	Cal Due	11/29/02
Bkg	0.3 cpmα	Bkg	6 cpmα	Bkg	5 cpmα
Eff.	33 %	Eff.	22.1 %	Eff.	20.9 %
MDA	20 dpmα	MDA	64 dpmα	MDA	63 dpmα

Mfg.	Eberline	Mfg.	NE Electra	Mfg.	NE Electra
Model	BC-4	Model	DP-6	Model	DP-6
Serial #	700	Serial #	2394	Serial #	3110
Cal Due	12/13/02	Cal Due	3/5/03	Cal Due	11/29/02
Bkg	33.6 cpmα	Bkg	133 cpmβ	Bkg	600 cpmβ
Eff.	25 %	Eff.	30.2 %	Eff.	30 %
MDA	200 dpmα	MDA	187 dpmβ	MDA	389 dpmβ

Survey Type:

Building: 788

Location: Solar ponds

Purpose: daily

RWP #: 02-RISS-020

Date: 9/30/02 Time: 1500

[redacted]

RCT: NA / NA / NA

Print name Signature Emp. #

PRN/REN # : NA

Comments: NA

SURVEY RESULTS

Swipe #	LOCATION	ALPHA Swipe dpm/100cm2	ALPHA Direct dpm/100cm2	ALPHA Wipe dpm/wipe	BETA Swipe dpm/100cm2	BETA Direct dpm/100cm2	BETA Wipe dpm/wipe
1	Loader	<20	<64	NA	<200	<389	NA
2	Loader	<20	<64		<200	<389	
3	Loader	<20	<64		<200	<389	
4	Loader	<20	<64		<200	<389	
5	Loader	<20	<64		<200	<389	
6	backhoe	<20	<64		<200	<389	
7	backhoe	<20	<64		<200	<389	
8	backhoe	<20	<64		<200	<389	
9	backhoe	<20	<64		<200	<389	
10	backhoe	<20	<64		<200	<389	
11	Excavator	<20	<64		<200	<389	
12	Excavator	<20	<64		<200	<389	
13	Excavator	<20	<64		<200	<389	
14	Excavator	<20	<64		<200	<389	
15	Excavator	<20	<64		<200	<389	
NA	NA	NA	NA		NA	NA	
NA	NA	NA	NA	NA	NA	NA	NA

Date Reviewed: 10-15-02 **RS Supervision:** S Coughlin / [redacted]

Print Name Signature

120

ROCKY FLATS ENVIRONMENTAL TECHNOLOGY SITE

Drawing Showing Survey Points

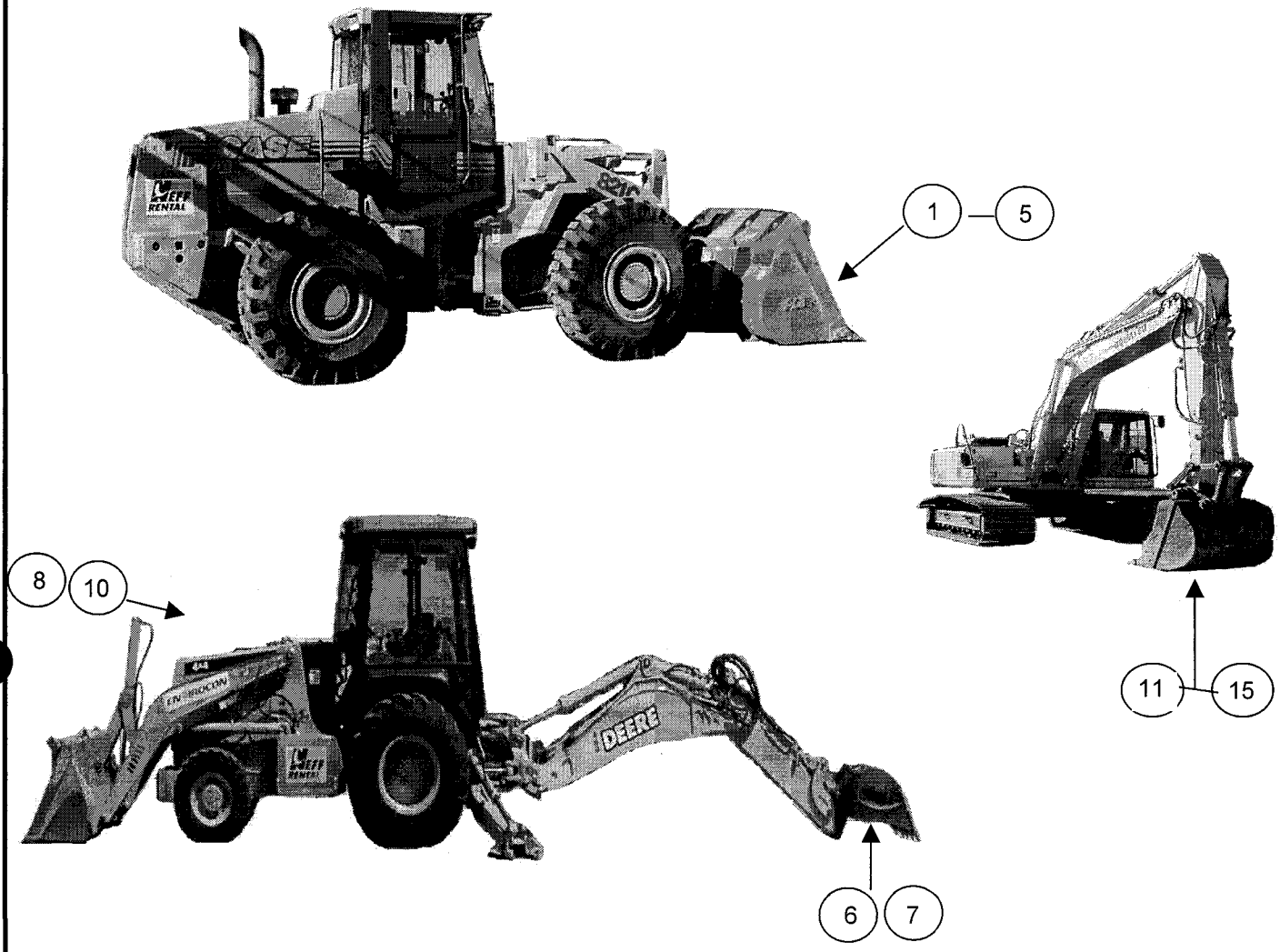

ROCKY FLATS ENVIRONMENTAL TECHNOLOGY SITE

INSTRUMENT DATA

Mfg.	Eberline	Mfg.	NE Electra	Mfg.	NE Electra
Model	SAC-4	Model	DP-6	Model	DP-6
Serial #	824	Serial #	2394	Serial #	3110
Cal Due	10/1/02	Cal Due	3/5/03	Cal Due	11/29/02
Bkg	0.3 cpmα	Bkg	6 cpmα	Bkg	5 cpmα
Eff.	33 %	Eff.	22.1 %	Eff.	20.9 %
MDA	20 dpmα	MDA	64 dpmα	MDA	63 dpmα

Mfg.	Eberline	Mfg.	NE Electra	Mfg.	NE Electra
Model	BC-4	Model	DP-6	Model	DP-6
Serial #	700	Serial #	2394	Serial #	3110
Cal Due	12/13/02	Cal Due	3/5/03	Cal Due	11/29/02
Bkg	33.6 cpmα	Bkg	133 cpmβ	Bkg	600 cpmβ
Eff.	25 %	Eff.	30.2 %	Eff.	30 %
MDA	200 dpmα	MDA	187 dpmβ	MDA	389 dpmβ

Survey Type: Contamination/ Radation
Building: 788 pad
Location: North of Pond C
Purpose: Recycle

RWP #: 02-RISS-020

Date: 9/30/02 Time: 1500

[redacted]
Print name Signature Emp. #

PRN/REN # : NA
Comments: Performed 100% scan, one minute pats, and swipes.

SURVEY RESULTS

Swipe #	LOCATION	ALPHA Swipe	ALPHA Direct	ALPHA Wipe	BETA Swipe	BETA Direct	BETA Wipe
		dpm/100cm2	dpm/100cm2	dpm/wipe	dpm/100cm2	dpm/100cm2	dpm/wipe
1	top of pad	<20	52	NA	<200	150	NA
2	top of pad	<20	23		<200	213	
3	top of pad	<20	19		<200	0	
4	top of pad	<20	57		<200	0	
5	top of pad	<20	38		<200	0	
6	top of pad	<20	38		<200	0	
7	top of pad	<20	23		<200	0	
8	top of pad	<20	53		<200	400	
9	top of pad	<20	19		<200	306	
10	top of pad	<20	23		<200	340	
11	top of pad	<20	0		<200	280	
12	top of pad	<20	43		<200	527	
13	top of pad	<20	34		<200	220	
14	top of pad	<20	34		<200	327	
15	top of pad	<20	38		<200	280	
16	top of pad	<20	62		<200	250	
17	top of pad	<20	0		<200	287	
18	top of pad	<20	52		<200	233	
19	top of pad	<20	43		<200	323	
20	top of pad	<20	0	NA	<200	213	NA

Date Reviewed: 10-3-02 **RS Supervision:** James W Smith / James W. Smith [redacted]
Print Name Signature

122

ROCKY FLATS ENVIRONMENTAL TECHNOLOGY SITE

INSTRUMENT DATA

Mfg.	Eberline	Mfg.	Eberline	Mfg.	NE Electra
Model	SAC-4	Model	BC-4	Model	DP-6
Serial #	824	Serial #	911	Serial #	2394
Cal Due	10/1/02	Cal Due	10/30/02	Cal Due	3/5/02
Bkg	0.1 cpmα	Bkg	31.5 cpmβ	Bkg	8 cpmα
Eff.	33 %	Eff.	25 %	Eff.	22.1 %
MDA	20 dpmα	MDA	200 dpmβ	MDA	72 dpmα
Mfg.	Eberline	Mfg.	Eberline	Mfg.	NE Electra
Model	SAC-4	Model	BC-4	Model	DP-6
Serial #	NA	Serial #	NA	Serial #	2394
Cal Due		Cal Due		Cal Due	3/5/02
Bkg	cpmα	Bkg	cpmβ	Bkg	665 cpmβ
Eff.	%	Eff.	%	Eff.	30.2 %
MDA	NA dpmα	MDA	NA dpmβ	MDA	406 dpmβ

Survey Type: Contamination
Building: 788
Location: access cargo
Purpose: weekly

RWP #: 02-RISS-020

Date: 9/27/02 Time: 1600

[redacted]

PRN/REN # : NA
Comments:

SURVEY RESULTS

Swipe #	LOCATION	ALPHA Swipe dpm/100cm2	ALPHA Direct dpm/100cm2	ALPHA Wipe dpm/wipe	BETA Swipe dpm/100cm2	BETA Direct dpm/100cm2	BETA Wipe dpm/wipe
1	Floor	< 20	NA	NA	< 200	NA	NA
2	Table	< 20			< 200		
3	Shelf	< 20			< 200		
4	Floor	< 20			< 200		
5	Floor	< 20			< 200		
6	Shelf	< 20			< 200		
7	Floor	< 20			< 200		
8	Floor	< 20			< 200		
NA	NA	NA			NA		
NA	NA	NA	NA	NA	NA	NA	NA

Date Reviewed: 9-29-02 **RS Supervision:** S Cogdill / [redacted]
Print Name Signature

123

Drawing Showing Survey Points

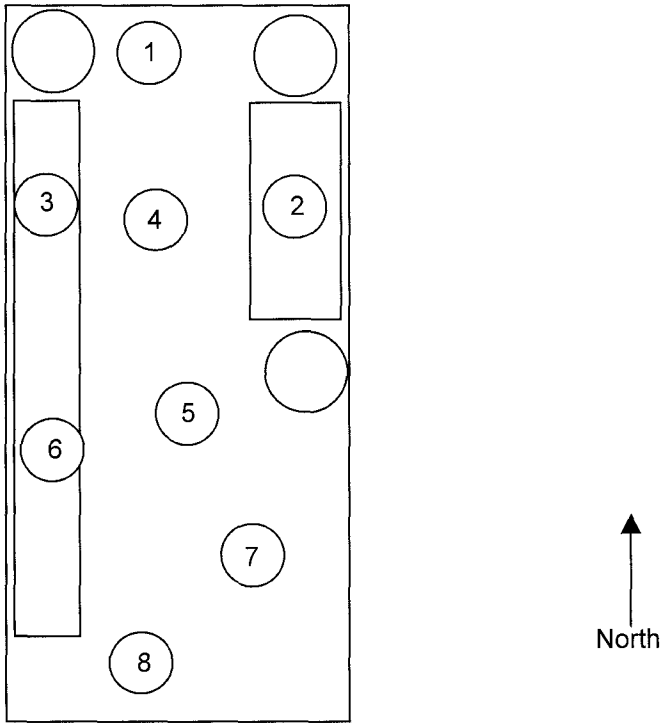

ROCKY FLATS ENVIRONMENTAL TECHNOLOGY SITE

INSTRUMENT DATA

Mfg.	Eberline	Mfg.	Eberline	Mfg.	NE Electra
Model	SAC-4	Model	BC-4	Model	DP-6
Serial #	824	Serial #	911	Serial #	2394
Cal Due	10/1/02	Cal Due	10/30/02	Cal Due	3/5/02
Bkg	0.1 cpmα	Bkg	31.5 cpmβ	Bkg	8 cpmα
Eff.	33 %	Eff.	25 %	Eff.	22.1 %
MDA	20 dpmα	MDA	200 dpmβ	MDA	72 dpmα

Mfg.	Eberline	Mfg.	Eberline	Mfg.	NE Electra
Model	SAC-4	Model	BC-4	Model	DP-6
Serial #	NA	Serial #	NA	Serial #	2394
Cal Due		Cal Due		Cal Due	3/5/02
Bkg	cpmα	Bkg	cpmβ	Bkg	665 cpmβ
Eff.	%	Eff.	%	Eff.	30.2 %
MDA	NA dpmα	MDA	NA dpmβ	MDA	406 dpmβ

Survey Type: Contamination
Building: 788
Location: general area
Purpose: daily

RWP #: 02-RISS-020

Date: 9/27/02 Time: 1600

[redacted]

PRN/REN # : NA
Comments:

SURVEY RESULTS

Swipe #	LOCATION	ALPHA Swipe dpm/100cm2	ALPHA Direct dpm/100cm2	ALPHA Wipe dpm/wipe	BETA Swipe dpm/100cm2	BETA Direct dpm/100cm2	BETA Wipe dpm/wipe
1	loader	< 20	< 72	NA	< 200	< 406	NA
2	loader	< 20	< 72	NA	< 200	< 406	NA
3	loader	< 20	< 72	NA	< 200	< 406	NA
4	loader	< 20	< 72	NA	< 200	< 406	NA
5	loader	< 20	< 72	NA	< 200	< 406	NA
6	trackhoe	< 20	< 72	NA	< 200	< 406	NA
7	trackhoe	< 20	< 72	NA	< 200	< 406	NA
8	trackhoe	< 20	< 72	NA	< 200	< 406	NA
9	trackhoe	< 20	< 72	NA	< 200	< 406	NA
10	trackhoe	< 20	< 72	NA	< 200	< 406	NA
11	backhoe	< 20	< 72	NA	< 200	< 406	NA
12	backhoe	< 20	< 72	NA	< 200	< 406	NA
13	backhoe	< 20	< 72	NA	< 200	< 406	NA
14	backhoe	< 20	< 72	NA	< 200	< 406	NA
15	backhoe	< 20	< 72	NA	< 200	< 406	NA
NA	NA	NA	NA	NA	NA	NA	NA
NA	NA	NA	NA	NA	NA	NA	NA
NA	NA	NA	NA	NA	NA	NA	NA
NA	NA	NA	NA	NA	NA	NA	NA
NA	NA	NA	NA	NA	NA	NA	NA

Date Reviewed: 9 29 02 **RS Supervision:** [redacted]
Print Name Signature

125

ROCKY FLATS ENVIRONMENTAL TECHNOLOGY SITE

Drawing Showing Survey Points

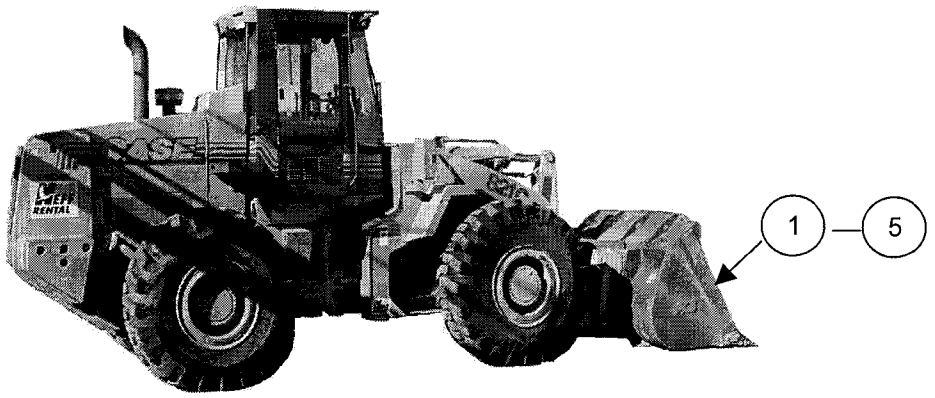

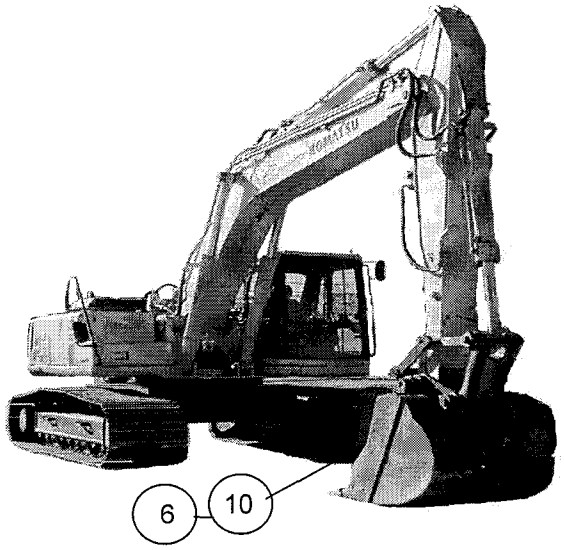

126

ROCKY FLATS ENVIRONMENTAL TECHNOLOGY SITE

INSTRUMENT DATA

Mfg.	Eberline	Mfg.	NE Electra	Mfg.	NE Electra
Model	SAC-4	Model	DP-6	Model	DP-6
Serial #	824	Serial #	1255	Serial #	2394
Cal Due	10/30/02	Cal Due	2/29/03	Cal Due	3/5/03
Bkg	0.1 cpmα	Bkg	8 cpmα	Bkg	3 cpmα
Eff.	33 %	Eff.	22.2 %	Eff.	22.1 %
MDA	20 dpmα	MDA	71 dpmα	MDA	49 dpmα
Mfg.	Eberline	Mfg.	NE Electra	Mfg.	NE Electra
Model	BC-4	Model	DP-6	Model	DP-6
Serial #	911	Serial #	1255	Serial #	2394
Cal Due	10/1/02	Cal Due	2/29/03	Cal Due	3/5/03
Bkg	31.5 cpmβ	Bkg	640 cpmβ	Bkg	644 cpmβ
Eff.	25 %	Eff.	29.6 %	Eff.	30.2 %
MDA	200 dpmβ	MDA	407 dpmβ	MDA	400 dpmβ

Survey Type: Contamination
Building: 788
Location: south blacktop road
Purpose: final dispotion

RWP #: 02-RISS-020

Date: 9/27/02 Time: 1000

[redacted]

PRN/REN # : NA
Comments: Scanned area of black top and performed took a pat and swipe at the highest areas.

SURVEY RESULTS

		ALPHA			BETA		
Swipe #	LOCATION	Swipe dpm/100cm2	Direct dpm/100cm2	Wipe dpm/wipe	Swipe dpm/100cm2	Direct dpm/100cm2	Wipe dpm/wipe
1	see map	< 20	18	NA	< 200	953	NA
2	see map	< 20	86	NA	< 200	1267	NA
3	see map	< 20	32	NA	< 200	959	NA
4	see map	< 20	18	NA	< 200	652	NA
5	see map	< 20	27	NA	< 200	3125	NA
6	see map	< 20	54	NA	< 200	1105	NA
7	see map	< 20	41	NA	< 200	990	NA
8	see map	< 20	27	NA	< 200	1301	NA
9	see map	< 20	54	NA	< 200	963	NA
10	see map	< 20	14	NA	< 200	1014	NA
11	see map	< 20	14	NA	< 200	1007	NA
12	see map	< 20	18	NA	< 200	598	NA
13	see map	< 20	32	NA	< 200	1219	NA
14	see map	< 20	41	NA	< 200	682	NA
15	see map	< 20	41	NA	< 200	1639	NA
16	see map	< 20	59	NA	< 200	1166	NA
17	see map	< 20	14	NA	< 200	1053	NA
18	see map	< 20	45	NA	< 200	944	NA
19	see map	< 20	9	NA	< 200	1155	NA
20	see map	< 20	63	NA	< 200	1248	NA

Date Reviewed: 9-30-02 **RS Supervision:** James W Smith (Print Name) James W Smith (Signature) [redacted]

27

ROCKY FLATS ENVIRONMENTAL TECHNOLOGY SITE

SURVEY RESULTS

Swipe	LOCATION	ALPHA Swipe	ALPHA Direct	ALPHA Wipe	BETA Swipe	BETA Direct	BETA Wipe
#		dpm/100cm2	dpm/100cm2	dpm/wipe	dpm/100cm2	dpm/100cm2	dpm/wipe
21	see map	< 20	14	NA	< 200	1301	NA
22	see map	< 20	0	NA	< 200	758	NA
23	see map	< 20	54	NA	< 200	1262	NA
24	see map	< 20	36	NA	< 200	815	NA
NA	NA	NA	NA	NA	NA	NA	NA
NA	NA	NA	NA	NA	NA	NA	NA

ROCKY FLATS ENVIRONMENTAL TECHNOLOGY SITE

Drawing Showing Survey Points

------Denotes grid lines of approximately 10 feet on each side.

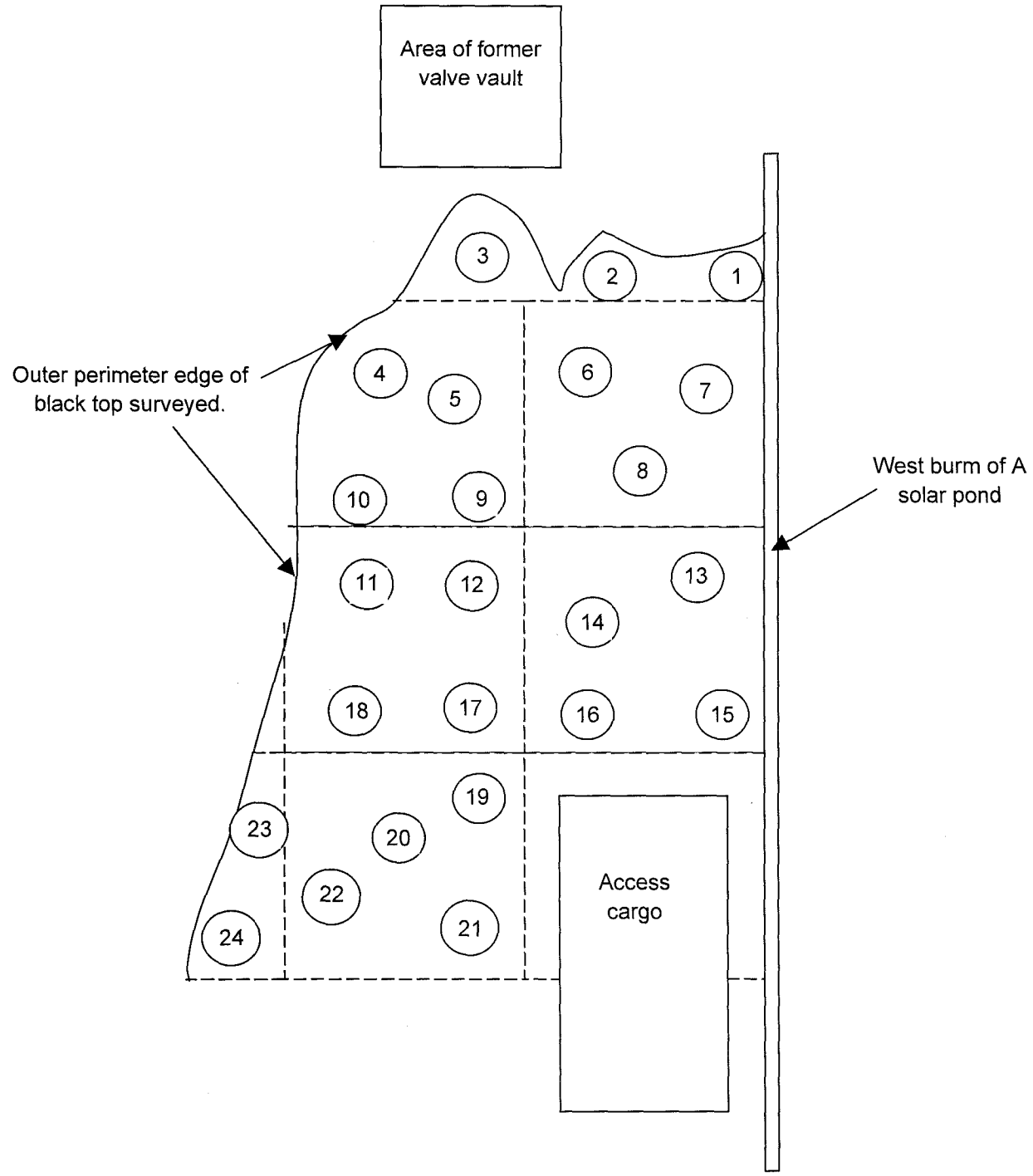

129

ROCKY FLATS ENVIRONMENTAL TECHNOLOGY SITE

INSTRUMENT DATA

Mfg.	Eberline	Mfg.	Eberline	Mfg.	NE Electra
Model	SAC-4	Model	BC-4	Model	DP-6
Serial #	824	Serial #	835	Serial #	1255
Cal Due	10/1/02	Cal Due	9/17/02	Cal Due	2/26/03
Bkg	0.1 cpmα	Bkg	34.7 cpmβ	Bkg	5 cpmα
Eff.	33 %	Eff.	25 %	Eff.	22.2 %
MDA	20 dpmα	MDA	200 dpmβ	MDA	59 dpmα

Mfg.	Eberline	Mfg.	Eberline	Mfg.	NE Electra
Model	SAC-4	Model	BC-4	Model	DP-6
Serial #	NA	Serial #	NA	Serial #	1255
Cal Due	NA	Cal Due	NA	Cal Due	2/26/03
Bkg	NA cpmα	Bkg	NA cpmβ	Bkg	392 cpmβ
Eff.	33 %	Eff.	25 %	Eff.	29.6 %
MDA	20 dpmα	MDA	200 dpmβ	MDA	320 dpmβ

Survey Type:

Building: 788

Location: Solar ponds

Purpose: daily

RWP #: 02-RISS-020

Date: 9/26/02 Time: 1500

[redacted]

RCT: NA / NA / NA

Print name Signature Emp. #

PRN/REN # : NA

Comments: NA

SURVEY RESULTS

Swipe #	LOCATION	ALPHA Swipe dpm/100cm2	ALPHA Direct dpm/100cm2	ALPHA Wipe dpm/wipe	BETA Swipe dpm/100cm2	BETA Direct dpm/100cm2	BETA Wipe dpm/wipe
1	Loader	<20	<59	NA	<200	<320	NA
2	Loader	<20	<59		<200	<320	
3	Loader	<20	<59		<200	<320	
4	Loader	<20	<59		<200	<320	
5	Loader	<20	<59		<200	<320	
6	backhoe	<20	<59		<200	<320	
7	backhoe	<20	<59		<200	<320	
8	backhoe	<20	<59		<200	<320	
9	backhoe	<20	<59		<200	<320	
10	backhoe	<20	<59		<200	<320	
11	Excavator	<20	<59		<200	<320	
12	Excavator	<20	<59		<200	<320	
13	Excavator	<20	<59		<200	<320	
14	Excavator	<20	<59		<200	<320	
15	Excavator	<20	<59		<200	<320	
NA	NA	NA	NA		NA	NA	
NA	NA	NA	NA	NA	NA	NA	NA

Date Reviewed: 9-29-02 **RS Supervision:** S Clemons / [signature]

Print Name Signature

[redacted]

130

ROCKY FLATS ENVIRONMENTAL TECHNOLOGY SITE

Drawing Showing Survey Points

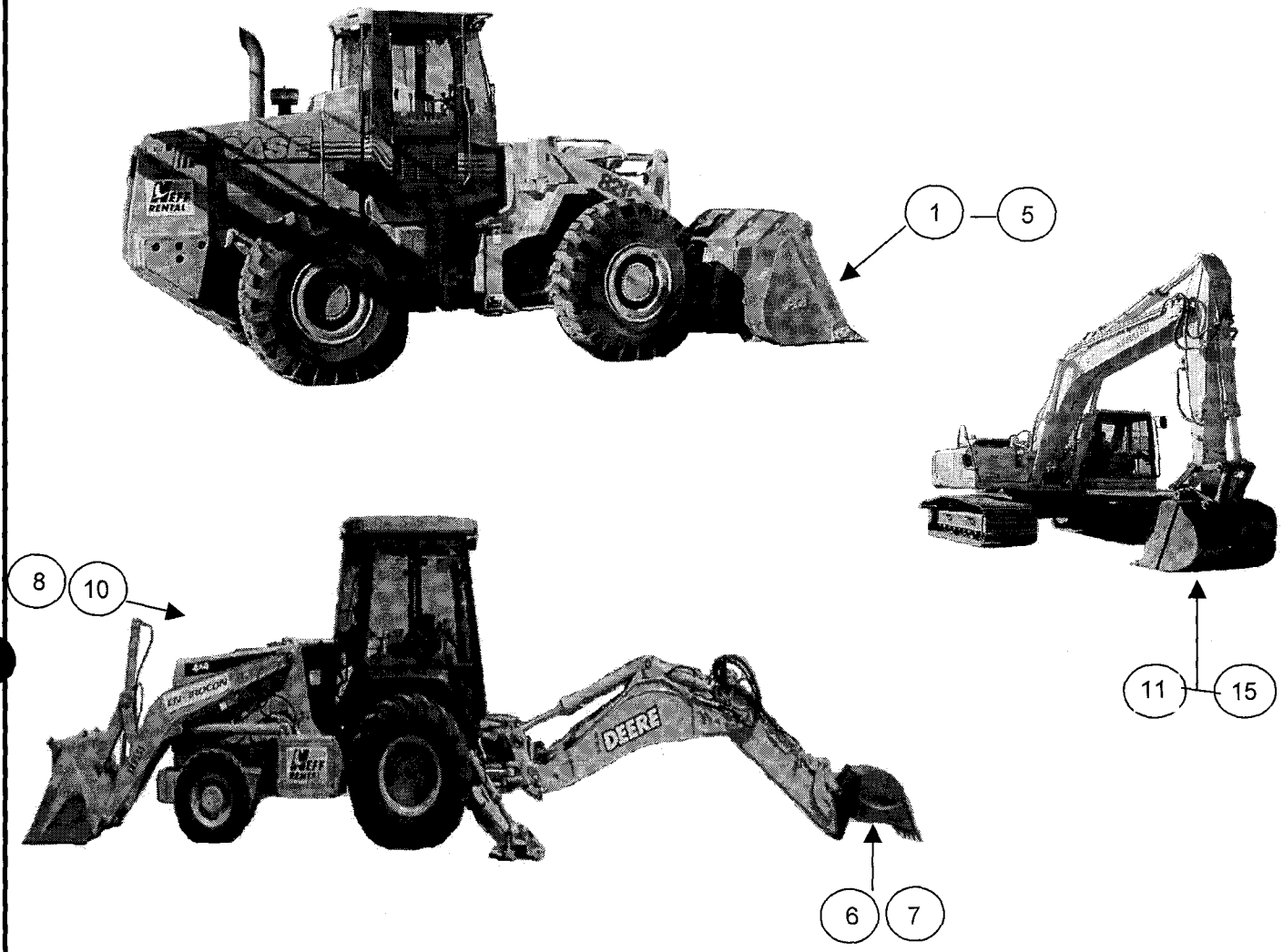

ROCKY FLATS ENVIRONMENTAL TECHNOLOGY SITE

INSTRUMENT DATA

Mfg.	Eberline	Mfg.	Eberline	Mfg.	NE Electra
Model	SAC-4	Model	BC-4	Model	DP-6
Serial #	824	Serial #	702	Serial #	1665
Cal Due	10/1/02	Cal Due	7/22/03	Cal Due	3/3/03
Bkg	0.3 cpmα	Bkg	31.6 cpmβ	Bkg	2 cpmα
Eff.	33 %	Eff.	25 %	Eff.	21.6 %
MDA	20 dpmα	MDA	200 dpmβ	MDA	43 dpmα

Mfg.	Eberline	Mfg.	Eberline	Mfg.	NE Electra
Model	SAC-4	Model	BC-4	Model	DP-6
Serial #	NA	Serial #	NA	Serial #	1665
Cal Due	NA	Cal Due	NA	Cal Due	3/3/03
Bkg	NA cpmα	Bkg	NA cpmβ	Bkg	290 cpmβ
Eff.	33 %	Eff.	25 %	Eff.	30.2 %
MDA	20 dpmα	MDA	200 dpmβ	MDA	271 dpmβ

Survey Type:

Building: Solar ponds

Location: solar plume

Purpose: baseline/drillrig

RWP #: 02-RISS-020

Date: 9/25/02 Time: 1500

[redacted]

RCT: NA / NA / NA

Print name Signature Emp. #

PRN/REN # : NA

Comments: NA

SURVEY RESULTS

Swipe #	LOCATION	ALPHA Swipe dpm/100cm2	ALPHA Direct dpm/100cm2	ALPHA Wipe dpm/wipe	BETA Swipe dpm/100cm2	BETA Direct dpm/100cm2	BETA Wipe dpm/wipe
1	tires	<20	<43	NA	<200	<271	NA
2	tires	<20	<43		<200	<271	
3	tires	<20	<43		<200	<271	
4	tires	<20	<43		<200	<271	
5	cab	<20	<43		<200	<271	
6	cab	<20	<43		<200	<271	
7	cab	<20	<43		<200	<271	
8	drill derrick	<20	<43		<200	<271	
9	drill derrick	<20	<43		<200	<271	
10	drill derrick	<20	<43		<200	<271	
11	drill derrick	<20	<43		<200	<271	
12	drill derrick	<20	<43		<200	<271	
13	controls	<20	<43		<200	<271	
14	controls	<20	<43		<200	<271	
15	lifters	<20	<43		<200	<271	
16	lifters	<20	<43		<200	<271	
17	lifters	<20	<43		<200	<271	
18	bed	<20	<43		<200	<271	
19	bed	<20	<43	▼	<200	<271	▼
20	bed	<20	<43	NA	<200	<271	NA

Date Reviewed: 9-30-02 **RS Supervision:** J.W. Smith James W Smith [redacted]

Print Name Signature

132

ROCKY FLATS ENVIRONMENTAL TECHNOLOGY SITE

SURVEY RESULTS

Swipe	LOCATION	ALPHA			BETA		
		Swipe	Direct	Wipe	Swipe	Direct	Wipe
#		dpm/100cm2	dpm/100cm2	dpm/wipe	dpm/100cm2	dpm/100cm2	dpm/wipe
21	tool crib	<20	<43	NA	<200	<271	NA
22	tool crib	<20	<43		<200	<271	
23	tool crib	<20	<43		<200	<271	
24	augers	<20	<43		<200	<271	
25	augers	<20	<43		<200	<271	
26	augers	<20	<43		<200	<271	
27	augers	<20	<43		<200	<271	
28	augers	<20	<43		<200	<271	
29	augers	<20	<43		<200	<271	
30	augers	<20	<43		<200	<271	
31	augers	<20	<43		<200	<271	
32	fender	<20	<43		<200	<271	
33	fender	<20	<43		<200	<271	
NA	NA	NA	NA		NA	NA	
NA	NA	NA	NA	NA	NA	NA	NA

ROCKY FLATS ENVIRONMENTAL TECHNOLOGY SITE

INSTRUMENT DATA

Mfg.	Eberline	Mfg.	Eberline	Mfg.	NE Electra
Model	SAC-4	Model	BC-4	Model	DP-6
Serial #	824	Serial #	911	Serial #	2394
Cal Due	10/1/02	Cal Due	10/30/02	Cal Due	3/5/02
Bkg	0.3 cpmα	Bkg	31.7 cpmβ	Bkg	5 cpmα
Eff.	33 %	Eff.	25 %	Eff.	22.1 %
MDA	20 dpmα	MDA	200 dpmβ	MDA	59 dpmα

Mfg.	Eberline	Mfg.	Eberline	Mfg.	NE Electra
Model	SAC-4	Model	BC-4	Model	DP-6
Serial #	NA	Serial #	NA	Serial #	2394
Cal Due		Cal Due		Cal Due	3/5/02
Bkg	cpmα	Bkg	cpmβ	Bkg	441 cpmβ
Eff.	%	Eff.	%	Eff.	30.2 %
MDA	NA dpmα	MDA	NA dpmβ	MDA	332 dpmβ

Survey Type: Contamination

Building: 788

Location: general area

Purpose: daily

RWP #: 02-RISS-020

Date: 9/25/02 Time: 1600

[redacted]

PRN/REN # : NA

Comments:

SURVEY RESULTS

Swipe #	LOCATION	ALPHA Swipe dpm/100cm2	ALPHA Direct dpm/100cm2	ALPHA Wipe dpm/wipe	BETA Swipe dpm/100cm2	BETA Direct dpm/100cm2	BETA Wipe dpm/wipe
1	loader	< 20	< 59	NA	< 200	< 332	NA
2	loader	< 20	< 59	NA	< 200	< 332	NA
3	loader	< 20	< 59	NA	< 200	< 332	NA
4	loader	< 20	< 59	NA	< 200	< 332	NA
5	loader	< 20	< 59	NA	< 200	< 332	NA
6	trackhoe	< 20	< 59	NA	< 200	< 332	NA
7	trackhoe	< 20	< 59	NA	< 200	< 332	NA
8	trackhoe	< 20	< 59	NA	< 200	< 332	NA
9	trackhoe	< 20	< 59	NA	< 200	< 332	NA
10	trackhoe	< 20	< 59	NA	< 200	< 332	NA
11	backhoe	< 20	< 59	NA	< 200	< 332	NA
12	backhoe	< 20	< 59	NA	< 200	< 332	NA
13	backhoe	< 20	< 59	NA	< 200	< 332	NA
14	backhoe	< 20	< 59	NA	< 200	< 332	NA
15	backhoe	< 20	< 59	NA	< 200	< 332	NA
16	hammer	< 20	< 59	NA	< 200	< 332	NA
17	hammer	< 20	< 59	NA	< 200	< 332	NA
18	hammer	< 20	< 59	NA	< 200	< 332	NA
19	hammer	< 20	< 59	NA	< 200	< 332	NA
20	hammer	< 20	< 59	NA	< 200	< 332	NA

Date Reviewed: 9-29-02 **RS Supervision:** [signature] / [signature] [redacted]

Print Name Signature

134

ROCKY FLATS ENVIRONMENTAL TECHNOLOGY SITE

Drawing Showing Survey Points

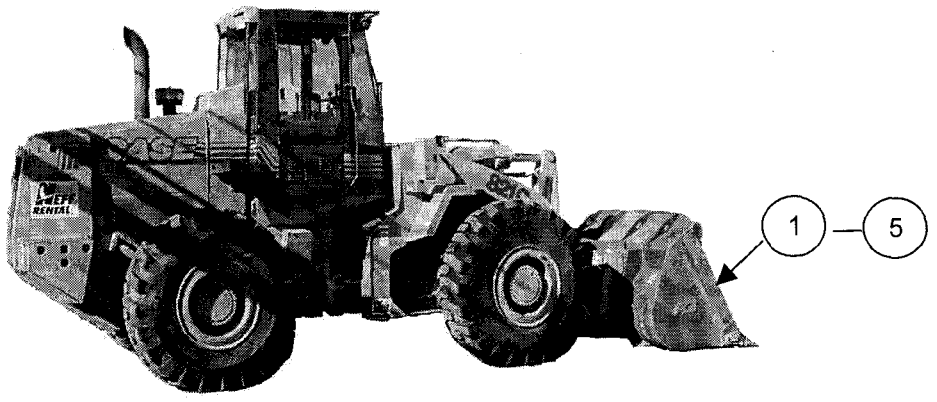

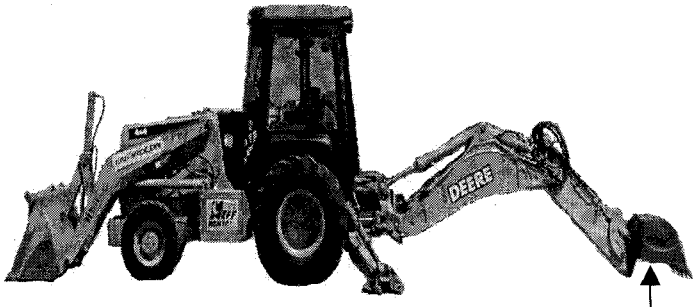

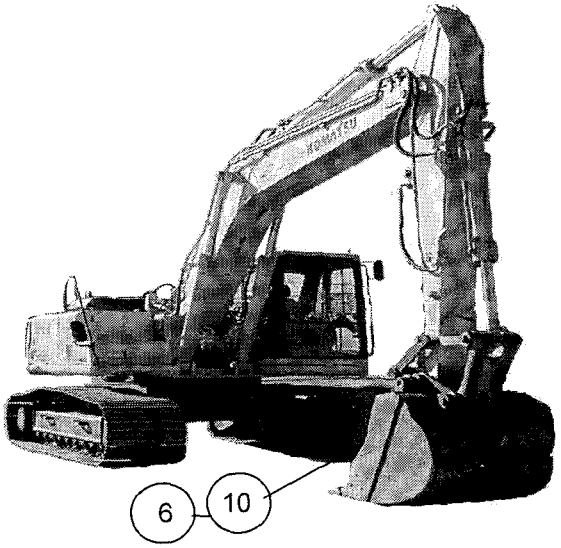

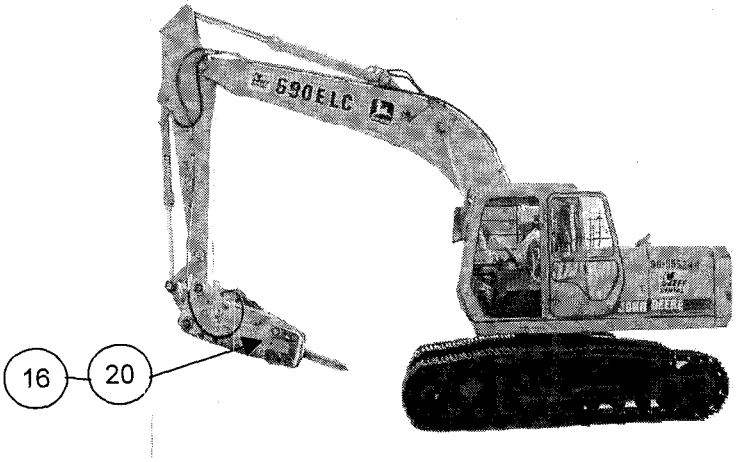

ROCKY FLATS ENVIRONMENTAL TECHNOLOGY SITE

INSTRUMENT DATA

Mfg.	Eberline	Mfg.	Eberline	Mfg.	NE Electra
Model	SAC-4	Model	BC-4	Model	DP-6
Serial #	824	Serial #	911	Serial #	2394
Cal Due	10/1/02	Cal Due	10/30/02	Cal Due	3/5/02
Bkg	0.4 cpmα	Bkg	33.6 cpmβ	Bkg	5 cpmα
Eff.	33 %	Eff.	25 %	Eff.	22.1 %
MDA	20 dpmα	MDA	200 dpmβ	MDA	59 dpmα
Mfg.	Eberline	Mfg.	Eberline	Mfg.	NE Electra
Model	SAC-4	Model	BC-4	Model	DP-6
Serial #	NA	Serial #	NA	Serial #	2394
Cal Due		Cal Due		Cal Due	3/5/02
Bkg	cpmα	Bkg	cpmβ	Bkg	392 cpmβ
Eff.	%	Eff.	%	Eff.	30.2 %
MDA	NA dpmα	MDA	NA dpmβ	MDA	314 dpmβ

Survey Type: Contamination
Building: 788
Location: general area
Purpose: daily

RWP #: 02-RISS-020

Date: 9/24/02 Time: 1630

[redacted]

PRN/REN # : NA
Comments:

SURVEY RESULTS

Swipe #	LOCATION	ALPHA Swipe dpm/100cm2	ALPHA Direct dpm/100cm2	ALPHA Wipe dpm/wipe	BETA Swipe dpm/100cm2	BETA Direct dpm/100cm2	BETA Wipe dpm/wipe
1	loader	< 20	< 59	NA	< 200	< 314	NA
2	loader	< 20	< 59	NA	< 200	< 314	NA
3	loader	< 20	< 59	NA	< 200	< 314	NA
4	loader	< 20	< 59	NA	< 200	< 314	NA
5	loader	< 20	< 59	NA	< 200	< 314	NA
6	trackhoe	< 20	< 59	NA	< 200	< 314	NA
7	trackhoe	< 20	< 59	NA	< 200	< 314	NA
8	trackhoe	< 20	< 59	NA	< 200	< 314	NA
9	trackhoe	< 20	< 59	NA	< 200	< 314	NA
10	trackhoe	< 20	< 59	NA	< 200	< 314	NA
11	backhoe	< 20	< 59	NA	< 200	< 314	NA
12	backhoe	< 20	< 59	NA	< 200	< 314	NA
13	backhoe	< 20	< 59	NA	< 200	< 314	NA
14	backhoe	< 20	< 59	NA	< 200	< 314	NA
15	backhoe	< 20	< 59	NA	< 200	< 314	NA
16	hammer	< 20	< 59	NA	< 200	< 314	NA
17	hammer	< 20	< 59	NA	< 200	< 314	NA
18	hammer	< 20	< 59	NA	< 200	< 314	NA
19	hammer	< 20	< 59	NA	< 200	< 314	NA
20	hammer	< 20	< 59	NA	< 200	< 314	NA

Date Reviewed: 9-25-02 **RS Supervision:** S Gorman / [redacted]
Print Name Signature

136

ROCKY FLATS ENVIRONMENTAL TECHNOLOGY SITE

Drawing Showing Survey Points

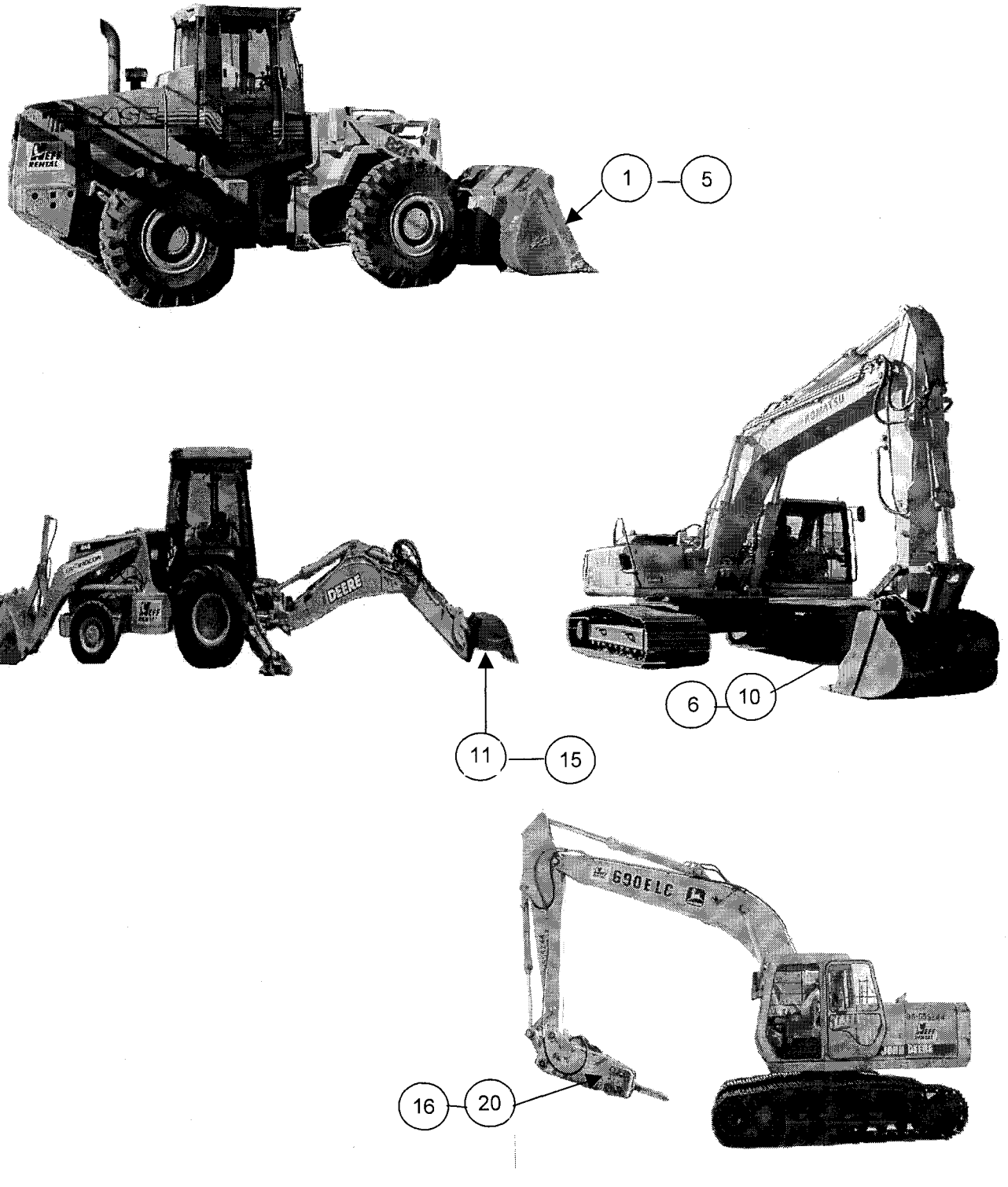

ROCKY FLATS ENVIRONMENTAL TECHNOLOGY SITE

INSTRUMENT DATA

Mfg.	Eberline	Mfg.	NE Electra	Mfg.	NE Electra	**Survey Type:**	contamination	
Model	SAC-4	Model	DP-6	Model	DP-6	Building:	788	
Serial #	824	Serial #	NA	Serial #	2394	Location:	concrete pads	
Cal Due	10/1/02	Cal Due		Cal Due	3/5/03	Purpose:	disposal dispotion	
Bkg	0.3 cpmα	Bkg	cpmα	Bkg	0 cpmα			
Eff.	33 %	Eff.	%	Eff.	22.1 %	RWP #:	02-RISS-020	
MDA	20 dpmα	MDA	NA dpmα	MDA	12 dpmα			
						Date:	9/24/02	Time: 1300
Mfg.	Eberline	Mfg.	NE Electra	Mfg.	NE Electra		[redacted]	
Model	BC-4	Model	DP-6	Model	DP-6			
Serial #	911	Serial #	NA	Serial #	2394			
Cal Due	10/30/02	Cal Due		Cal Due	3/5/03			
Bkg	33.6 cpmβ	Bkg	cpmβ	Bkg	557 cpmβ	RCT:	NA	NA / NA
Eff.	25 %	Eff.	%	Eff.	30.2 %		Print name	Signature Emp. #
MDA	200 dpmβ	MDA	NA dpmβ	MDA	372 dpmβ			

PRN/REN # : NA

Comments: Survey performed on the concrete pads that were removed from south of the 788 bldg. The black top is to be packaged as SCO waste.

SURVEY RESULTS

		ALPHA			BETA		
Swipe #	LOCATION	Swipe dpm/100cm2	Direct dpm/100cm2	Wipe dpm/wipe	Swipe dpm/100cm2	Direct dpm/100cm2	Wipe dpm/wipe
1	concrete	0	41	NA	0	1013	NA
2	concrete	0	27	NA	0	1162	NA
3	concrete	0	32	NA	0	1407	NA
4	concrete	0	68	NA	0	1079	NA
5	concrete	3	77	NA	12	1715	NA
6	concrete	0	27	NA	0	1606	NA
7	concrete	0	27	NA	24	1990	NA
8	concrete	6	77	NA	16	1063	NA
9	concrete	0	32	NA	0	1172	NA
10	concrete	0	45	NA	0	1460	NA
NA	NA	NA	NA	NA	NA	NA	NA
NA	NA	NA	NA	NA	NA	NA	NA
NA	NA	NA	NA	NA	NA	NA	NA
NA	NA	NA	NA	NA	NA	NA	NA
NA	NA	NA	NA	NA	NA	NA	NA
NA	NA	NA	NA	NA	NA	NA	NA
NA	NA	NA	NA	NA	NA	NA	NA
NA	NA	NA	NA	NA	NA	NA	NA
NA	NA	NA	NA	NA	NA	NA	NA
NA	NA	NA	NA	NA	NA	NA	NA

Date Reviewed: 9-24-02 **RS Supervision:** James W Smith James W. Smith [redacted]

Print Name Signature

ROCKY FLATS ENVIRONMENTAL TECHNOLOGY SITE

INSTRUMENT DATA

Mfg.	Eberline	Mfg.	Eberline	Mfg.	NE Electra
Model	SAC-4	Model	BC-4	Model	DP-6
Serial #	824	Serial #	835	Serial #	1255
Cal Due	10/1/02	Cal Due	~~9/17/02~~ JB 9/11/03	Cal Due	2/26/03
Bkg	0.3 cpmα	Bkg	35.4 cpmβ	Bkg	4 cpmα
Eff.	33 %	Eff.	25 %	Eff.	22.2 %
MDA	20 dpmα	MDA	200 dpmβ	MDA	54 dpmα

Mfg.	Eberline	Mfg.	Eberline	Mfg.	NE Electra
Model	SAC-4	Model	BC-4	Model	DP-6
Serial #	NA	Serial #	NA	Serial #	1255
Cal Due	NA	Cal Due	NA	Cal Due	2/26/03
Bkg	NA cpmα	Bkg	NA cpmβ	Bkg	343 cpmβ
Eff.	33 %	Eff.	25 %	Eff.	29.6 %
MDA	20 dpmα	MDA	200 dpmβ	MDA	300 dpmβ

Survey Type:

Building: 788

Location: Solar ponds

Purpose: daily

RWP #: 02-RISS-020

Date: 9/23/02 Time: 1500

[redacted]

RCT: NA / NA / NA

Print name Signature Emp. #

PRN/REN # : NA

Comments: NA

SURVEY RESULTS

Swipe #	LOCATION	ALPHA Swipe dpm/100cm2	ALPHA Direct dpm/100cm2	ALPHA Wipe dpm/wipe	BETA Swipe dpm/100cm2	BETA Direct dpm/100cm2	BETA Wipe dpm/wipe
1	Loader	<20	<54	NA	<200	<300	NA
2	Loader	<20	<54		<200	<300	
3	Loader	<20	<54		<200	<300	
4	Loader	<20	<54		<200	<300	
5	Loader	<20	<54		<200	<300	
6	backhoe	<20	<54		<200	<300	
7	backhoe	<20	<54		<200	<300	
8	backhoe	<20	<54		<200	<300	
9	backhoe	<20	<54		<200	<300	
10	backhoe	<20	<54		<200	<300	
11	Excavator	<20	<54		<200	<300	
12	Excavator	<20	<54		<200	<300	
13	Excavator	<20	<54		<200	<300	
14	Excavator	<20	<54		<200	<300	
15	Excavator	<20	<54		<200	<300	
NA	NA	NA	NA		NA	NA	
NA	NA	NA	NA	NA	NA	NA	NA

Date Reviewed: 9-29-02 **RS Supervision:** S [redacted] / [redacted]

Print Name Signature

[redacted]

ROCKY FLATS ENVIRONMENTAL TECHNOLOGY SITE

Drawing Showing Survey Points

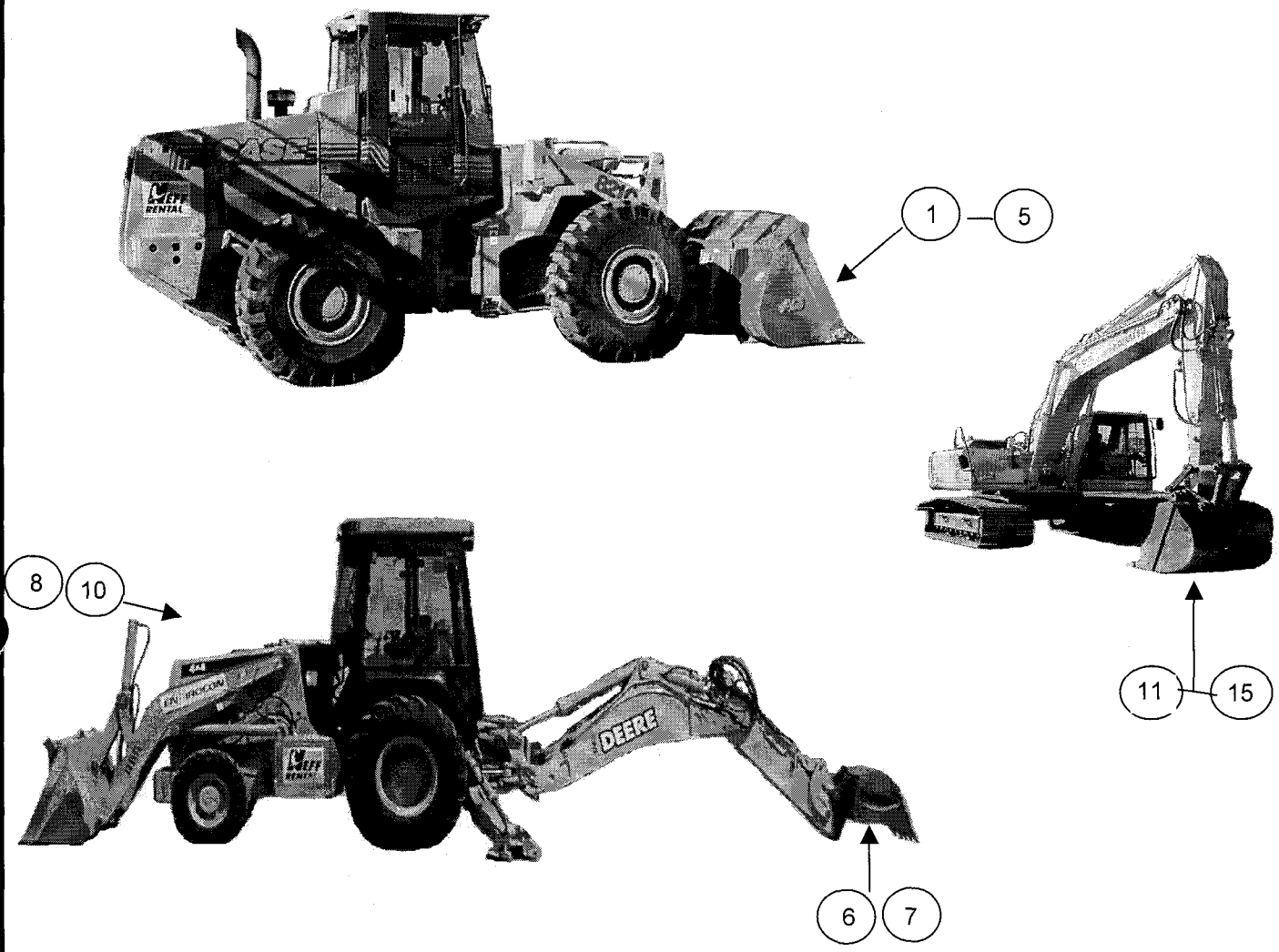

140

ROCKY FLATS ENVIRONMENTAL TECHNOLOGY SITE

INSTRUMENT DATA

Mfg.	Eberline	Mfg.	NE Electra	Mfg.	NE Electra	**Survey Type:**	contamination	
Model	SAC-4	Model	DP-6	Model	DP-6	Building:	788	
Serial #	824	Serial #	1255	Serial #	3110	Location:	south end black top	
Cal Due	10/1/02	Cal Due	2/26/03	Cal Due	11/29/02	Purpose:	disposal dispotion	
Bkg	0.3 cpmα	Bkg	7 cpmα	Bkg	3 cpmα			
Eff.	33 %	Eff.	22.2 %	Eff.	20.9 %	RWP #:	02-RISS-020	
MDA	20 dpmα	MDA	68 dpmα	MDA	52 dpmα			
						Date:	9/23/02	Time: 0930
Mfg.	Eberline	Mfg.	NE Electra	Mfg.	NE Electra	[redacted]		
Model	BC-4	Model	DP-6	Model	DP-6			
Serial #	835	Serial #	1255	Serial #	3110			
Cal Due	9/17/03	Cal Due	2/26/03	Cal Due	11/29/02			
Bkg	35.4 cpmβ	Bkg	690 cpmβ	Bkg	730 cpmβ			
Eff.	25 %	Eff.	29.6 %	Eff.	34.0 %			
MDA	200 dpmβ	MDA	422 dpmβ	MDA	377 dpmβ			

PRN/REN # : NA

Comments: Survey performed on the blacktop that was removed from in front of the south west roll up door and around the valve pit. The black top is to be packaged as SCO waste.

SURVEY RESULTS

		ALPHA			BETA		
Swipe #	LOCATION	Swipe dpm/100cm2	Direct dpm/100cm2	Wipe dpm/wipe	Swipe dpm/100cm2	Direct dpm/100cm2	Wipe dpm/wipe
1	black top	0	140	NA	0	378	NA
2	black top	0	5	NA	0	1169	NA
3	black top	0	0	NA	0	108	NA
4	black top	0	0	NA	0	1361	NA
5	black top	0	0	NA	0	527	NA
6	black top	0	0	NA	0	1026	NA
7	black top	0	1	NA	0	60	NA
8	black top	0	1	NA	16	1328	NA
9	black top	0	9	NA	0	91	NA
10	black top	6	0	NA	0	1257	NA
11	black top	0	0	NA	0	327	NA
12	black top	0	0	NA	0	990	NA
13	black top	0	1	NA	0	716	NA
14	black top	0	0	NA	0	1361	NA
15	black top	0	2	NA	0	588	NA
16	black top	0	0	NA	0	922	NA
17	black top	0	59	NA	0	3601	NA
18	black top	0	63	NA	0	3314	NA
19	black top	3	9	NA	0	300	NA
20	black top	0	50	NA	24	3348	NA

Date Reviewed: 9-23-02 **RS Supervision:** James W Smith (Print Name) James W Smith (Signature) [redacted]

ROCKY FLATS ENVIRONMENTAL TECHNOLOGY SITE

INSTRUMENT DATA

Mfg.	Eberline	Mfg.	Eberline	Mfg.	NE Electra
Model	SAC-4	Model	BC-4	Model	DP-6
Serial #	824	Serial #	700	Serial #	2394
Cal Due	10/1/02	Cal Due	12/13/02	Cal Due	3/5/02
Bkg	0.4 cpmα	Bkg	33.3 cpmβ	Bkg	4 cpmα
Eff.	33 %	Eff.	25 %	Eff.	22.1 %
MDA	20 dpmα	MDA	200 dpmβ	MDA	54 dpmα
Mfg.	Eberline	Mfg.	Eberline	Mfg.	NE Electra
Model	SAC-4	Model	BC-4	Model	DP-6
Serial #	NA	Serial #	NA	Serial #	2394
Cal Due		Cal Due		Cal Due	3/5/02
Bkg	cpmα	Bkg	cpmβ	Bkg	452 cpmβ
Eff.	%	Eff.	%	Eff.	30.2 %
MDA	NA dpmα	MDA	NA dpmβ	MDA	336 dpmβ

Survey Type: Contamination
Building: 788
Location: access cargo
Purpose: weekly

RWP #: 02-RISS-020

Date: 9/20/02 Time: 1600

[redacted]

PRN/REN # : NA
Comments:

SURVEY RESULTS

Swipe #	LOCATION	ALPHA Swipe dpm/100cm2	ALPHA Direct dpm/100cm2	ALPHA Wipe dpm/wipe	BETA Swipe dpm/100cm2	BETA Direct dpm/100cm2	BETA Wipe dpm/wipe
1	Floor	< 20	NA	NA	< 200	NA	NA
2	Table	< 20			< 200		
3	Floor	< 20			< 200		
4	Floor	< 20			< 200		
5	Floor	< 20			< 200		
6	Shelf	< 20			< 200		
7	Floor	< 20			< 200		
8	Floor	< 20			< 200		
NA	NA	NA			NA		
NA	NA	NA	NA	NA	NA	NA	NA

Date Reviewed: 9-25-02 **RS Supervision:** [redacted]
Print Name Signature

142

ROCKY FLATS ENVIRONMENTAL TECHNOLOGY SITE

Drawing Showing Survey Points

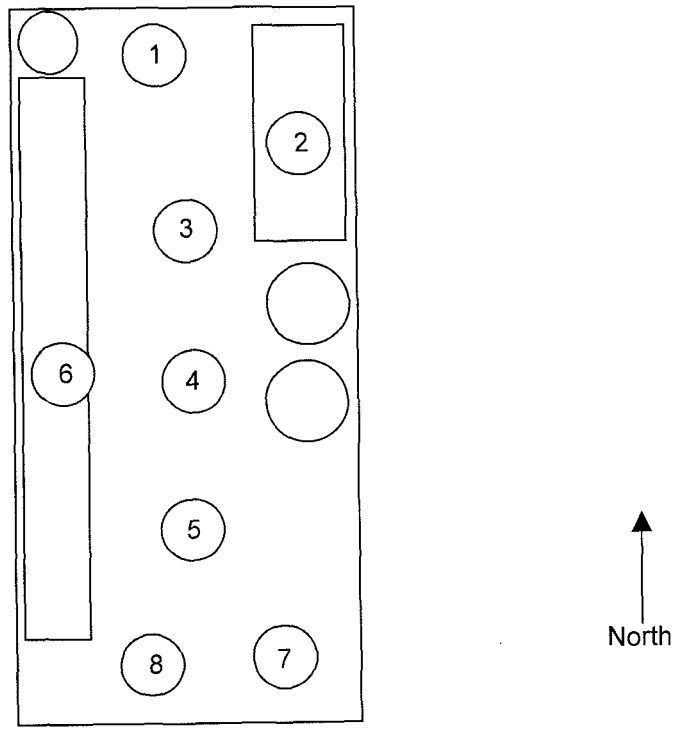

ROCKY FLATS ENVIRONMENTAL TECHNOLOGY SITE

INSTRUMENT DATA

Mfg.	Eberline	Mfg.	Eberline	Mfg.	NE Electra
Model	SAC-4	Model	BC-4	Model	DP-6
Serial #	824	Serial #	700	Serial #	2394
Cal Due	10/1/02	Cal Due	12/13/02	Cal Due	3/5/02
Bkg	0.4 cpmα	Bkg	33.3 cpmβ	Bkg	4 cpmα
Eff.	33 %	Eff.	25 %	Eff.	22.1 %
MDA	20 dpmα	MDA	200 dpmβ	MDA	54 dpmα

Mfg.	Eberline	Mfg.	Eberline	Mfg.	NE Electra
Model	SAC-4	Model	BC-4	Model	DP-6
Serial #	NA	Serial #	NA	Serial #	2394
Cal Due		Cal Due		Cal Due	3/5/02
Bkg	cpmα	Bkg	cpmβ	Bkg	452 cpmβ
Eff.	%	Eff.	%	Eff.	30.2 %
MDA	NA dpmα	MDA	NA dpmβ	MDA	336 dpmβ

Survey Type: Contamination
Building: 788
Location: general area
Purpose: daily

RWP #: 02-RISS-020

Date: 9/20/02 Time: 1600

[redacted]

PRN/REN # : NA
Comments:

SURVEY RESULTS

Swipe #	LOCATION	ALPHA Swipe dpm/100cm2	ALPHA Direct dpm/100cm2	ALPHA Wipe dpm/wipe	BETA Swipe dpm/100cm2	BETA Direct dpm/100cm2	BETA Wipe dpm/wipe
1	loader	< 20	< 54	NA	< 200	< 336	NA
2	loader	< 20	< 54	NA	< 200	< 336	NA
3	loader	< 20	< 54	NA	< 200	< 336	NA
4	loader	< 20	< 54	NA	< 200	< 336	NA
5	loader	< 20	< 54	NA	< 200	< 336	NA
6	trackhoe	< 20	< 54	NA	< 200	< 336	NA
7	trackhoe	< 20	< 54	NA	< 200	< 336	NA
8	trackhoe	< 20	< 54	NA	< 200	< 336	NA
9	trackhoe	< 20	< 54	NA	< 200	< 336	NA
10	trackhoe	< 20	< 54	NA	< 200	< 336	NA
11	backhoe	< 20	< 54	NA	< 200	< 336	NA
12	backhoe	< 20	< 54	NA	< 200	< 336	NA
13	backhoe	< 20	< 54	NA	< 200	< 336	NA
14	backhoe	< 20	< 54	NA	< 200	< 336	NA
15	backhoe	< 20	< 54	NA	< 200	< 336	NA
16	hammer	< 20	< 54	NA	< 200	< 336	NA
17	hammer	< 20	< 54	NA	< 200	< 336	NA
18	hammer	< 20	< 54	NA	< 200	< 336	NA
19	hammer	< 20	< 54	NA	< 200	< 336	NA
20	hammer	< 20	< 54	NA	< 200	< 336	NA

Date Reviewed: 9-29-02 **RS Supervision:** S Coleman / [redacted]
Print Name Signature

ROCKY FLATS ENVIRONMENTAL TECHNOLOGY SITE

Drawing Showing Survey Points

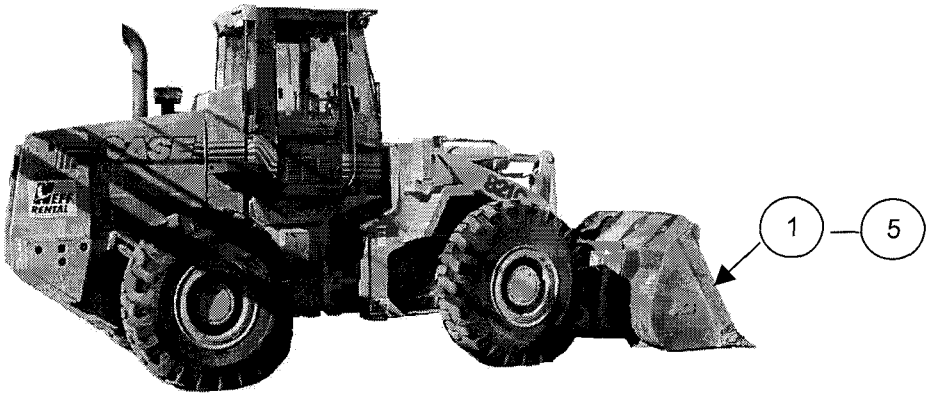

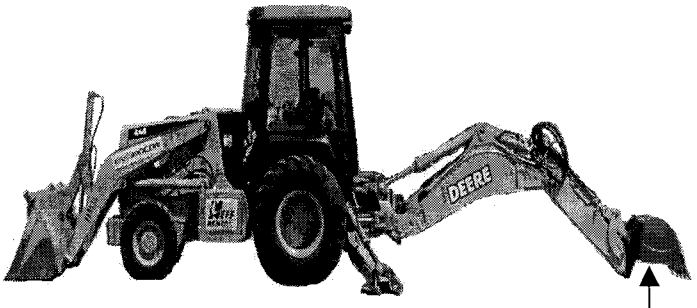

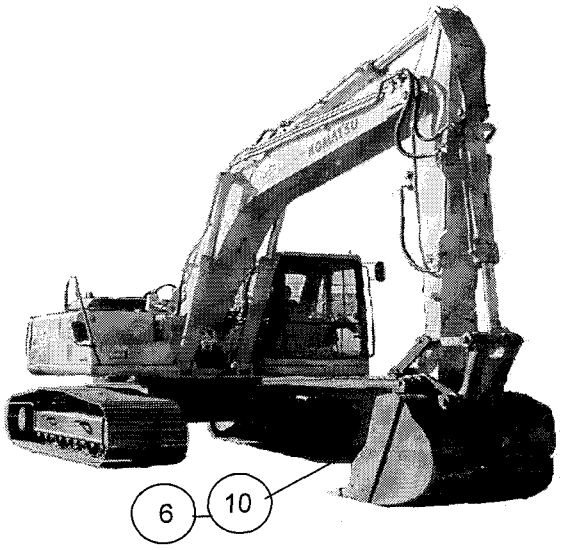

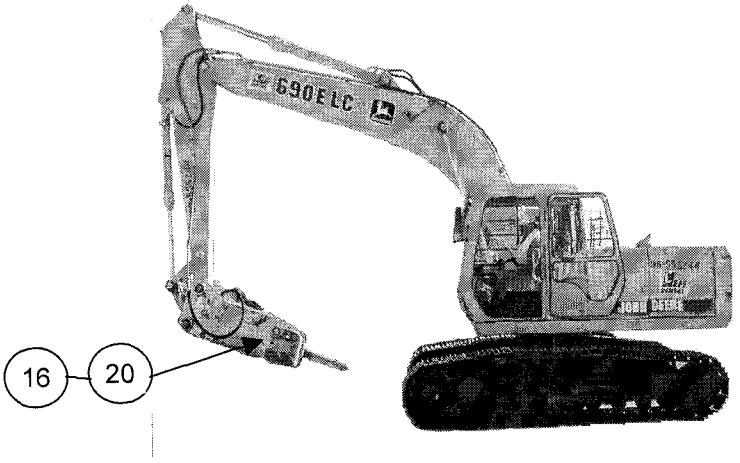

ROCKY FLATS ENVIRONMENTAL TECHNOLOGY SITE

INSTRUMENT DATA

Mfg.	Eberline	Mfg.	Eberline	Mfg.	NE Electra
Model	SAC-4	Model	BC-4	Model	DP-6
Serial #	824	Serial #	700	Serial #	3110
Cal Due	10/1/02	Cal Due	12/13/02	Cal Due	11/29/02
Bkg	0.3 cpmα	Bkg	29.4 cpmβ	Bkg	4 cpmα
Eff.	33 %	Eff.	25 %	Eff.	20.9 %
MDA	20 dpmα	MDA	200 dpmβ	MDA	57 dpmα

Mfg.	Eberline	Mfg.	Eberline	Mfg.	NE Electra
Model	SAC-4	Model	BC-4	Model	DP-6
Serial #	NA	Serial #	NA	Serial #	3110
Cal Due		Cal Due		Cal Due	11/29/02
Bkg	cpmα	Bkg	cpmβ	Bkg	441 cpmβ
Eff.	%	Eff.	%	Eff.	34 %
MDA	NA dpmα	MDA	NA dpmβ	MDA	295 dpmβ

Survey Type: Contamination
Building: 788
Location: general area
Purpose: daily

RWP #: 02-RISS-020

Date: 9/19/02 Time: 1600

[redacted]

PRN/REN # : NA
Comments:

SURVEY RESULTS

Swipe #	LOCATION	ALPHA Swipe dpm/100cm2	ALPHA Direct dpm/100cm2	ALPHA Wipe dpm/wipe	BETA Swipe dpm/100cm2	BETA Direct dpm/100cm2	BETA Wipe dpm/wipe
1	loader	< 20	< 57	NA	< 200	< 295	NA
2	loader	< 20	< 57	NA	< 200	< 295	NA
3	loader	< 20	< 57	NA	< 200	< 295	NA
4	loader	< 20	< 57	NA	< 200	< 295	NA
5	loader	< 20	< 57	NA	< 200	< 295	NA
6	trackhoe	< 20	< 57	NA	< 200	< 295	NA
7	trackhoe	< 20	< 57	NA	< 200	< 295	NA
8	trackhoe	< 20	< 57	NA	< 200	< 295	NA
9	trackhoe	< 20	< 57	NA	< 200	< 295	NA
10	trackhoe	< 20	< 57	NA	< 200	< 295	NA
11	backhoe	< 20	< 57	NA	< 200	< 295	NA
12	backhoe	< 20	< 57	NA	< 200	< 295	NA
13	backhoe	< 20	< 57	NA	< 200	< 295	NA
14	backhoe	< 20	< 57	NA	< 200	< 295	NA
15	backhoe	< 20	< 57	NA	< 200	< 295	NA
NA	NA	NA	NA	NA	NA	NA	NA
NA	NA	NA	NA	NA	NA	NA	NA
NA	NA	NA	NA	NA	NA	NA	NA
NA	NA	NA	NA	NA	NA	NA	NA
NA	NA	NA	NA	NA	NA	NA	NA

Date Reviewed: 9-20-02 **RS Supervision:** [redacted]
Print Name Signature

146

Drawing Showing Survey Points

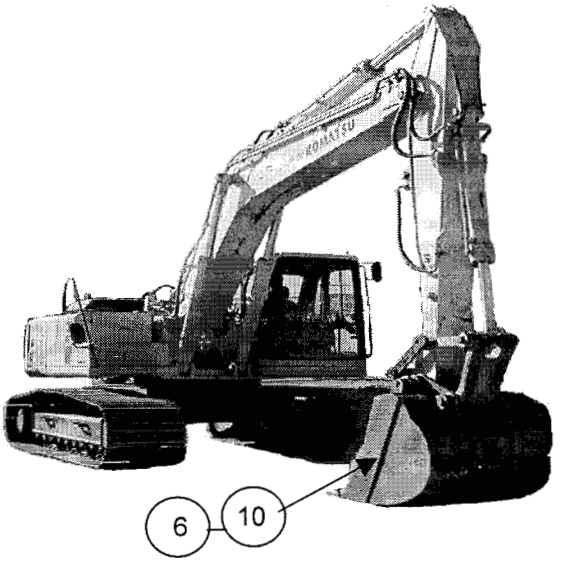

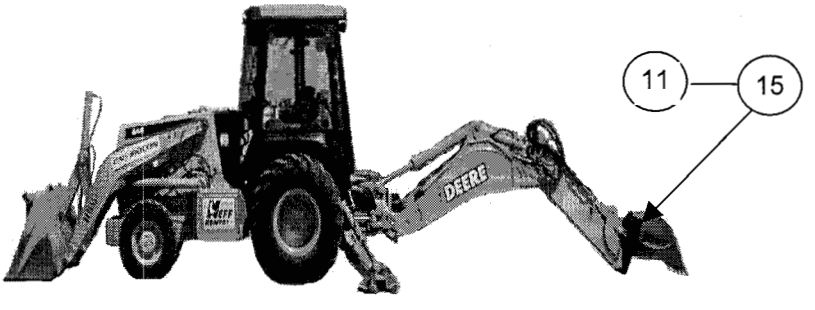

ROCKY FLATS ENVIRONMENTAL TECHNOLOGY SITE

INSTRUMENT DATA

Mfg.	Eberline	Mfg.	N/A	Mfg.	N/A	**Survey Type:**	Contamination, Radiation
Model	SAC 4	Model	N/A	Model	N/A	Building:	Solar Ponds
Serial #	770	Serial #	N/A	Serial #	N/A	Location:	Solar Ponds
Cal Due	7/25/02	Cal Due	N/A	Cal Due	N/A	Purpose:	sample survey
Bkg	0.2 cpmα	Bkg	N/A	Bkg	N/A		
Efficiency	33.00 %	Efficiency	N/A	Efficiency	N/A	RWP #:	NA
MDA	20 dpmα	MDA	N/A	MDA	N/A		

Date: 7/19/02 Time: 15:00

Mfg.	Eberline	Mfg.	N/A	Mfg.	Bicron
Model	BC 4	Model	N/A	Model	μ rem
Serial #	704	Serial #	N/A	Serial #	B982H
Cal Due	10/30/02	Cal Due	N/A	Cal Due	8/7/02
Bkg	31.5 cpmβ	Bkg	N/A	Bkg	<10 μrem
Efficiency	25.00 %	Efficiency	N/A	Efficiency	N/A
MDA	200 dpmβ	MDA	N/A	MDA	<17 μrem

[redacted]

PRN/REN # : ~~020128T130C-001~~

Comments: NA

SURVEY RESULTS

Swipe #	Location / Description Results in DPM/100sq.cm	Removable Alpha	Removable Beta	Total Alpha	Total Beta	μrem/hr
1	02E0160-001.001	<20	<200	NA	NA	<17
2	02E0160-002.001	<20	<200	NA	NA	<17
3	02E0160-003.001	<20	<200	NA	NA	<17
4	02E0160-004.001	<20	<200	NA	NA	<17
5	NA	<20	<200	NA	NA	<17
6	02E0160-001.002	<20	<200	NA	NA	<17
7	02E0160-001.003	<20	<200	NA	NA	<17
8	02E0160-002.002	<20	<200	NA	NA	<17
9	02E0160-002.003	<20	<200	NA	NA	<17
10	02E0160-003.002	<20	<200	NA	NA	<17
11	02E0160-003.003	<20	<200	NA	NA	<17
12	02E0160-004.002	<20	<200	NA	NA	<17
13	02E0160-004.003	<20	<200	NA	NA	<17
14	02E0160-006.001	<20	<200	NA	NA	<17
15	02E0160-006.002	<20	<200	NA	NA	<17
16	02E0160-007.001	<20	<200	NA	NA	<17
17	02E0160-007.002	<20	<200	NA	NA	<17
18	02E0160-008.001	<20	<200	NA	NA	<17
19	outside bag	<20	<200	NA	NA	<17
20	outside bag	<20	<200	NA	NA	<17
21	outside bag	<20	<200	NA	NA	<17
22	outside bag	<20	<200	NA	NA	<17
23	outside bag	<20	<200	NA	NA	<17
24	outside bag	<20	<200	NA	NA	<17
25	outside bag	<20	<200	NA	NA	<17

MAP

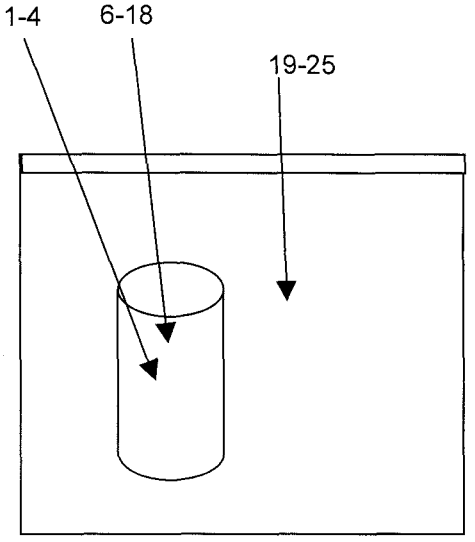

Date Reviewed: 7-25-02 **RS Supervision:** [redacted]

Print Name Signature

ROCKY FLATS ENVIRONMENTAL TECHNOLOGY SITE

INSTRUMENT DATA

Mfg.	Eberline	Mfg.	Eberline	Mfg.	NE Electra
Model	SAC-4	Model	BC-4	Model	DP-6
Serial #	824	Serial #	700	Serial #	1682
Cal Due	10/1/02	Cal Due	12/13/02	Cal Due	2/9/03
Bkg	0.6 cpmα	Bkg	29.4 cpmβ	Bkg	5 cpmα
Eff.	33 %	Eff.	25 %	Eff.	22.7 %
MDA	20 dpmα	MDA	200 dpmβ	MDA	58 dpmα

Mfg.	Eberline	Mfg.	Eberline	Mfg.	NE Electra
Model	SAC-4	Model	BC-4	Model	DP-6
Serial #	NA	Serial #	NA	Serial #	1682
Cal Due	NA	Cal Due	NA	Cal Due	2/9/03
Bkg	NA cpmα	Bkg	NA cpmβ	Bkg	600 cpmβ
Eff.	33 %	Eff.	25 %	Eff.	30.5 %
MDA	20 dpmα	MDA	200 dpmβ	MDA	382 dpmβ

Survey Type: Contamination/ Radation
Building: sumps 3&4
Location: North of Pond B
Purpose: SCO

RWP #: 02-RISS-020

Date: 9/19/02 Time: 1500

[redacted]

RCT: NA / NA / NA
Print name Signature Emp. #

PRN/REN # : NA
Comments: NA

SURVEY RESULTS

Swipe #	LOCATION	ALPHA Swipe dpm/100cm2	ALPHA Direct dpm/100cm2	ALPHA Wipe dpm/wipe	BETA Swipe dpm/100cm2	BETA Direct dpm/100cm2	BETA Wipe dpm/wipe
1	Inside sump 3	3	150	NA	128	3291	NA
2	Inside sump 3	0	88		116	2931	
3	Inside sump 3	0	163		108	3462	
4	Inside sump 3	6	127		136	3616	
5	Inside sump 3	0	92		128	3577	
6	Inside sump 4	3	132		132	2679	
7	Inside sump 4	0	145		108	2630	
8	Inside sump 4	3	123		124	3331	
9	Inside sump 4	0	66		140	2993	
10	Inside sump 4	0	105		132	2691	
NA	NA	NA	NA		NA	NA	
NA	NA	NA	NA	NA	NA	NA	NA

Date Reviewed: 10-13-02 **RS Supervision:** [redacted]
Print Name Signature

149

ROCKY FLATS ENVIRONMENTAL TECHNOLOGY SITE

INSTRUMENT DATA

Mfg.	Eberline	Mfg.	Eberline	Mfg.	NE Electra
Model	SAC-4	Model	BC-4	Model	DP-6
Serial #	824	Serial #	702	Serial #	1255
Cal Due	10/1/02	Cal Due	7/22/03	Cal Due	2/26/03
Bkg	0.4 cpmα	Bkg	38.3 cpmβ	Bkg	4 cpmα
Eff.	33 %	Eff.	25 %	Eff.	22.2 %
MDA	20 dpmα	MDA	200 dpmβ	MDA	54 dpmα
Mfg.	Eberline	Mfg.	Eberline	Mfg.	NE Electra
Model	SAC-4	Model	BC-4	Model	DP-6
Serial #	NA	Serial #	NA	Serial #	1255
Cal Due	NA	Cal Due	NA	Cal Due	2/26/03
Bkg	NA cpmα	Bkg	NA cpmβ	Bkg	486 cpmβ
Eff.	33 %	Eff.	25 %	Eff.	29.6 %
MDA	20 dpmα	MDA	200 dpmβ	MDA	355 dpmβ

Survey Type:

Building: 788

Location: Solar ponds

Purpose: daily

RWP #: 02-RISS-020

Date: 9/18/02 Time: 1500

[redacted]

RCT: NA / NA / NA

Print name Signature Emp. #

PRN/REN # : NA

Comments: NA

SURVEY RESULTS

Swipe #	LOCATION	ALPHA Swipe dpm/100cm2	ALPHA Direct dpm/100cm2	ALPHA Wipe dpm/wipe	BETA Swipe dpm/100cm2	BETA Direct dpm/100cm2	BETA Wipe dpm/wipe
1	Loader	<20	<54	NA	<200	<355	NA
2	Loader	<20	<54		<200	<355	
3	Loader	<20	<54		<200	<355	
4	Loader	<20	<54		<200	<355	
5	Loader	<20	<54		<200	<355	
6	backhoe	<20	<54		<200	<355	
7	backhoe	<20	<54		<200	<355	
8	backhoe	<20	<54		<200	<355	
9	backhoe	<20	<54		<200	<355	
10	backhoe	<20	<54		<200	<355	
11	Excavator	<20	<54		<200	<355	
12	Excavator	<20	<54		<200	<355	
13	Excavator	<20	<54		<200	<355	
14	Excavator	<20	<54		<200	<355	
15	Excavator	<20	<54		<200	<355	
NA	NA	NA	NA		NA	NA	
NA	NA	NA	NA	NA	NA	NA	NA

Date Reviewed: 9-2002 **RS Supervision:** S Graham / [signature]

Print Name Signature [redacted]

150

Drawing Showing Survey Points

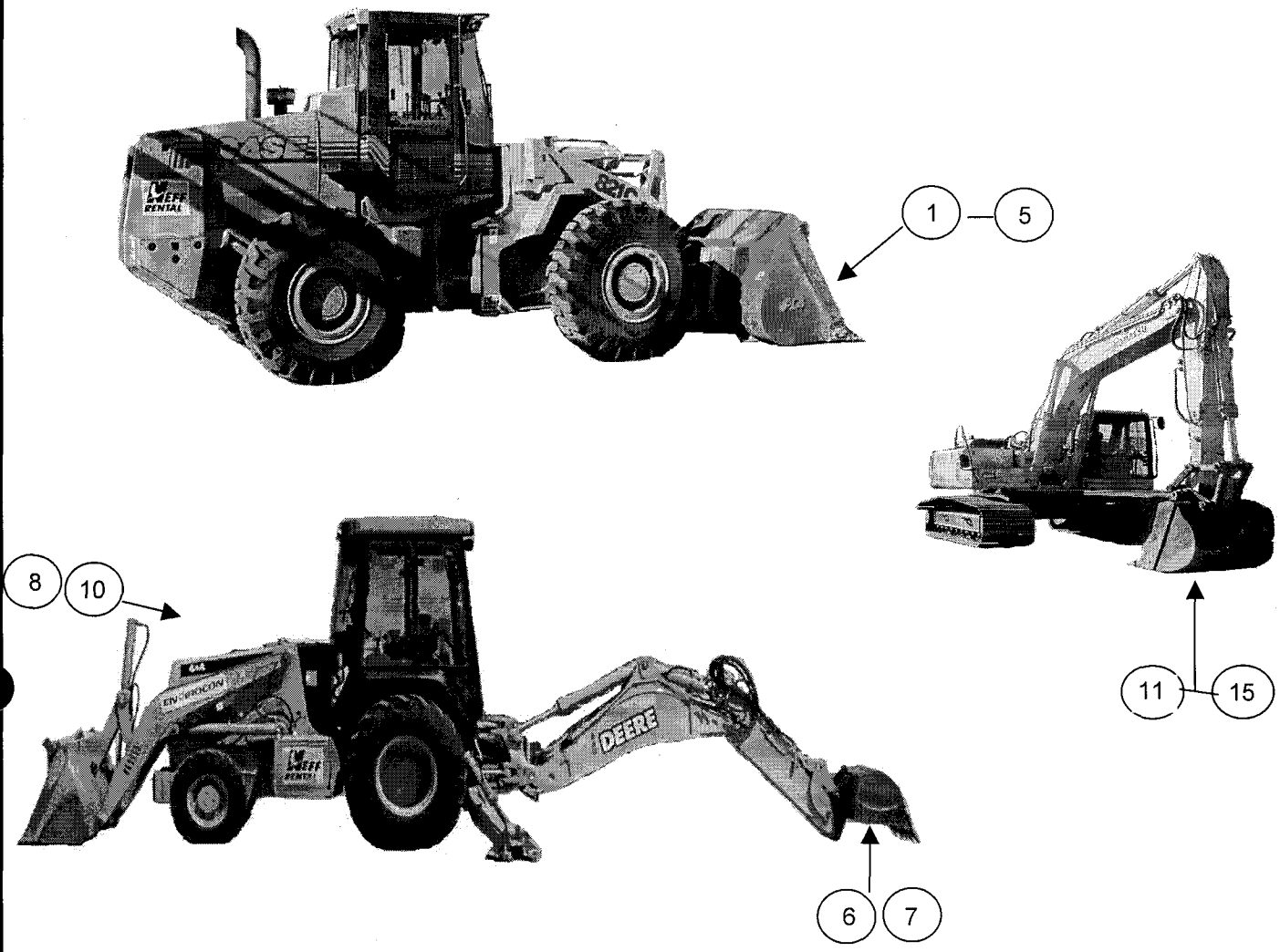

151

ROCKY FLATS ENVIRONMENTAL TECHNOLOGY SITE

INSTRUMENT DATA

Mfg.	Eberline	Mfg.	Eberline	Mfg.	NE Electra
Model	SAC-4	Model	BC-4	Model	DP-6
Serial #	824	Serial #	700	Serial #	1366
Cal Due	10/1/02	Cal Due	12/13/02	Cal Due	2/1/03
Bkg	0.2 cpmα	Bkg	33.8 cpmβ	Bkg	2 cpmα
Eff.	33 %	Eff.	25 %	Eff.	20.4 %
MDA	20 dpmα	MDA	200 dpmβ	MDA	46 dpmα

Mfg.	Eberline	Mfg.	Eberline	Mfg.	NE Electra
Model	SAC-4	Model	BC-4	Model	DP-6
Serial #	NA	Serial #	NA	Serial #	1366
Cal Due	NA	Cal Due	NA	Cal Due	2/1/03
Bkg	NA cpmα	Bkg	NA cpmβ	Bkg	293 cpmβ
Eff.	33 %	Eff.	25 %	Eff.	28.2 %
MDA	20 dpmα	MDA	200 dpmβ	MDA	292 dpmβ

Survey Type:

Building: 788

Location: Solar ponds

Purpose: daily

RWP #: 02-RISS-020

Date: 9/17/02 Time: 1500

[redacted]

RCT: NA / NA / NA

Print name Signature Emp. #

PRN/REN # : NA

Comments: NA

SURVEY RESULTS

Swipe #	LOCATION	ALPHA Swipe dpm/100cm2	ALPHA Direct dpm/100cm2	ALPHA Wipe dpm/wipe	BETA Swipe dpm/100cm2	BETA Direct dpm/100cm2	BETA Wipe dpm/wipe
1	Loader	<20	<46	NA	<200	<292	NA
2	Loader	<20	<46		<200	<292	
3	Loader	<20	<46		<200	<292	
4	Loader	<20	<46		<200	<292	
5	Loader	<20	<46		<200	<292	
6	backhoe	<20	<46		<200	<292	
7	backhoe	<20	<46		<200	<292	
8	backhoe	<20	<46		<200	<292	
9	backhoe	<20	<46		<200	<292	
10	backhoe	<20	<46		<200	<292	
11	Excavator	<20	<46		<200	<292	
12	Excavator	<20	<46		<200	<292	
13	Excavator	<20	<46		<200	<292	
14	Excavator	<20	<46		<200	<292	
15	Excavator	<20	<46		<200	<292	
NA	NA	NA	NA		NA	NA	
NA	NA	NA	NA	NA	NA	NA	NA

Date Reviewed: 9-20-02 **RS Supervision:** [signature] / [signature]

Print Name Signature

[redacted]

152

Drawing Showing Survey Points

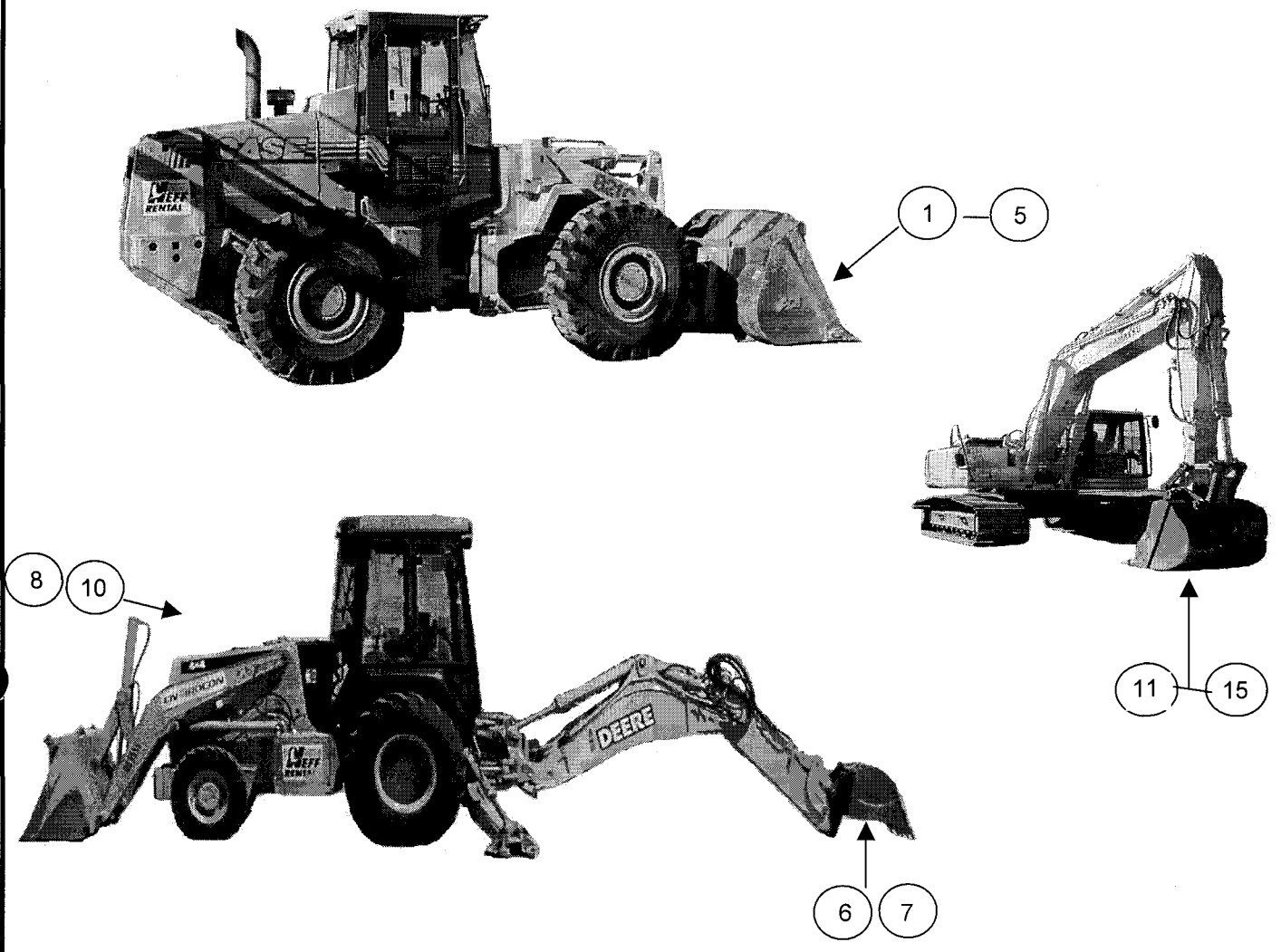

ROCKY FLATS ENVIRONMENTAL TECHNOLOGY SITE

INSTRUMENT DATA

Mfg.	Eberline	Mfg.	NA	Mfg.	NE Electra
Model	SAC-4	Model		Model	DP-6
Serial #	824	Serial #		Serial #	1249
Cal Due	10/1/02	Cal Due		Cal Due	10/5/02
Bkg.	0.2 cpm α	Bkg.		Bkg.	4 cpm α
Efficiency	33.0 %	Efficiency		Efficiency	21.3 %
MDA	20 dpm α	MDA	NA	MDA	56 dpm α
Mfg.	Eberline	Mfg.	NA	Mfg.	NE Electra
Model	BC-4	Model		Model	DP-6
Serial #	700	Serial #		Serial #	1249
Cal Due	12/13/02	Cal Due		Cal Due	10/5/02
Bkg.	33.8 cpm β	Bkg.		Bkg.	542 cpm β
Efficiency	25.0 %	Efficiency		Efficiency	33.8 %
MDA	200 dpm β	MDA	NA	MDA	328 dpm β

Survey type: Contamination
Building: NA
Location: East of 207B Solar Ponds
Purpose: Pre-job/In-progress of Pipe Cutting
RWP #: 02-RISS-020
Date: 9/17/02 Time: 1030

[redacted]

PRN/REN # : NA
Comments: Performed swipe and direct surveys on piping prior to cutting and following penetration of piping. Water was found to be in pipe at swipe location #8. Pipe cut was sealed and swipes 9-11 were taken to verify no spread of contamination. All personnel in pit were surveyed-no contamination detected.

SURVEY RESULTS

Swipe #	LOCATION/DESCRIPTION	ALPHA			BETA		
		Swipe	Direct	Wipe	Swipe	Direct	Wipe
		dpm/100cm2	dpm/100cm2	dpm/wipe	dpm/100cm2	dpm/100cm2	dpm/wipe
1	Exterior Pipe (Pre-Cut)	<20	<56	NA	<200	<328	NA
2	Pipe Internal (Post-Cut)	<20	<56		<200	<328	
3	Pipe Internal (Post-Cut)	<20	<56		<200	<328	
4	Pipe exterior following accidental breach during excavation	<20	<56		<200	<328	
5	Exterior Pipe (Pre-Cut)	<20	<56		<200	<328	
6	Pipe Internal (Post-Cut)	<20	<56		<200	<328	
7	Pipe Internal (Post-Cut)	<20	<56		<200	<328	
8	Exterior Pipe (Pre-Cut)	<20	<56		<200	<328	
9	Valve Actuator	<20	NA		<200	NA	
10	Exterior Pipe (Pre-Cut)	<20			<200		
11	Dirt	<20			<200		
NA	NA	NA			NA		
NA	NA	NA	NA	NA	NA	NA	NA

Date Reviewed: 9-17-02 **RS Supervision:** [redacted]
Print Name Signature

154

ROCKY FLATS ENVIRONMENTAL TECHNOLOGY SITE

Drawing Showing Survey Points

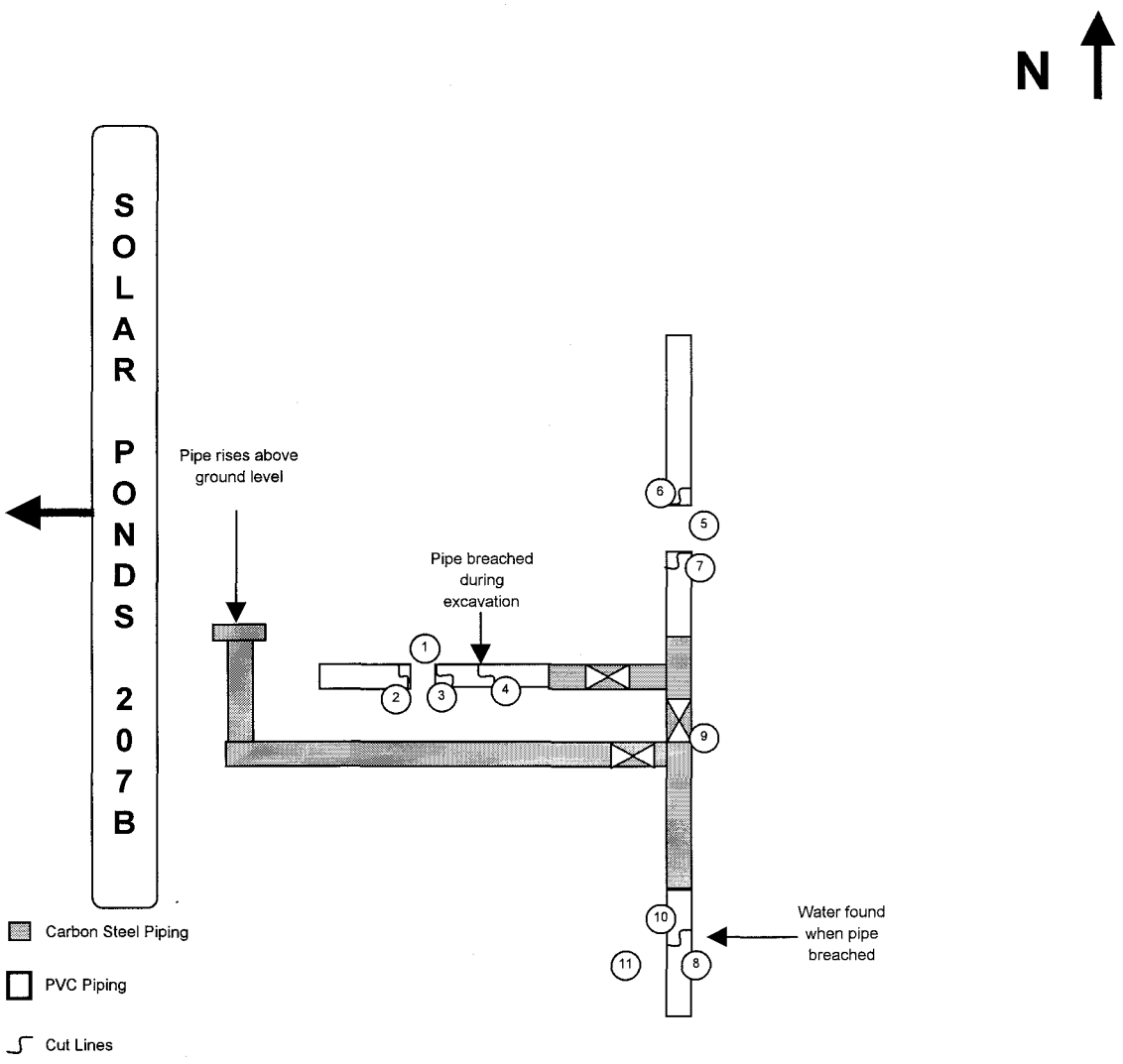

155

ROCKY FLATS ENVIRONMENTAL TECHNOLOGY SITE

INSTRUMENT DATA

Mfg.	Bicron	Mfg.	Eberline	Mfg.	NE Electra
Model	MicroRem	Model	SAC-4	Model	DP-6
Serial #	B710T	Serial #	824	Serial #	1249
Cal Due	1/30/03	Cal Due	10/1/02	Cal Due	10/5/02
Bkg	NA	Bkg.	0.2 cpm α	Bkg.	4 cpm α
Eff.	NA	Efficiency	33.0 %	Efficiency	21.3 %
MDDR	0.017 mr/hr	MDA	20 dpm α	MDA	56 dpm α
Mfg.	NA	Mfg.	Eberline	Mfg.	NE Electra
Model		Model	BC-4	Model	DP-6
Serial #		Serial #	700	Serial #	1249
Cal Due		Cal Due	12/13/02	Cal Due	10/5/02
Bkg		Bkg.	33.8 cpm β	Bkg.	502 cpm β
Eff.		Efficiency	25 %	Efficiency	33.8 %
MDDR	NA	MDA	200 dpm β	MDA	316 dpm β

Survey Type: Radiation and Contamination
Building: NA
Location: Solar Ponds/T130I
Purpose: Release Eval for Water/Soil Samples
RWP #: NA
Date: 9/17/02 Time: 1245

[redacted]

RCT: NA / NA / NA
Print name / Signature / Emp. #

PRN/REN # : 020626-T130C-002
Comments : None.

SURVEY RESULTS

#	Location/Description	Gamma/ X-Ray	Neutron	Total	Alpha Swipe	Alpha Direct	Alpha Wipe	Beta Swipe	Beta Direct	Beta Wipe
		mr/hr	mr/hr	mr/hr	dpm/100cm²	dpm/100cm²	dpm/wipe	dpm/100cm²	dpm/100cm	dpm/wipe
1	02E0257-001.001	<0.017	0	<0.017	<20	<56	NA	<200	<316	NA
2	02E0257-001.002	<0.017	0	<0.017	<20	<56		<200	<316	
3	02E0257-002.001	<0.017	0	<0.017	<20	<56		<200	<316	
4	02E0257-002.002	<0.017	0	<0.017	<20	<56		<200	<316	
5	02E0257-002.003	<0.017	0	<0.017	<20	<56		<200	<316	
6	02E0257-003.001	<0.017	0	<0.017	<20	<56		<200	<316	
7	02E0257-003.002	<0.017	0	<0.017	<20	<56		<200	<316	
8	02E0257-002.004	<0.017	0	<0.017	<20	<56		<200	<316	
NA	NA	NA	NA	NA	NA	NA		NA	NA	
NA	NA	NA	NA	NA	NA	NA	NA	NA	NA	NA

Date Reviewed: 9-23-02 **RS Supervision:** S Gerard / [redacted]
Print Name / Signature

156

ROCKY FLATS ENVIRONMENTAL TECHNOLOGY SITE

INSTRUMENT DATA

Mfg.	Bicron	Mfg.	Eberline	Mfg.	NE Electra
Model	MicroRem	Model	SAC-4	Model	DP-6
Serial #	B710T	Serial #	824	Serial #	1249
Cal Due	1/30/03	Cal Due	10/1/02	Cal Due	10/5/02
Bkg	NA	Bkg.	0.2 cpm α	Bkg.	4 cpm α
Eff.	NA	Efficiency	33.0 %	Efficiency	21.3 %
MDDR	0.017 mr/hr	MDA	20 dpm α	MDA	56 dpm α

Mfg.	NA	Mfg.	Eberline	Mfg.	NE Electra
Model		Model	BC-4	Model	DP-6
Serial #		Serial #	700	Serial #	1249
Cal Due		Cal Due	12/13/02	Cal Due	10/5/02
Bkg		Bkg.	33.8 cpm β	Bkg.	502 cpm β
Eff.		Efficiency	25 %	Efficiency	33.8 %
MDDR	NA	MDA	200 dpm β	MDA	316 dpm β

Survey Type: Radiation and Contamination
Building: NA
Location: Solar Ponds/T130I
Purpose: Release Eval for Water/Soil Samples

RWP #: NA

Date: 9/17/02 Time: 1245

[redacted]

RCT: NA / NA / NA
Print name Signature Emp. #

PRN/REN # : 020626-T130C-002
Comments : None.

SURVEY RESULTS

#	Location/Description	Gamma/ X-Ray	Neutron	Total	Alpha Swipe	Alpha Direct	Alpha Wipe	Beta Swipe	Beta Direct	Beta Wipe
		mr/hr	mr/hr	mr/hr	dpm/100cm²	dpm/100cm²	dpm/wipe	dpm/100cm²	dpm/100cm	dpm/wipe
1	02E0257-001.001	<0.017	0	<0.017	<20	<56	NA	<200	<316	NA
2	02E0257-001.002	<0.017	0	<0.017	<20	<56		<200	<316	
3	02E0257-002.001	<0.017	0	<0.017	<20	<56		<200	<316	
4	02E0257-002.002	<0.017	0	<0.017	<20	<56		<200	<316	
5	02E0257-002.003	<0.017	0	<0.017	<20	<56		<200	<316	
6	02E0257-003.001	<0.017	0	<0.017	<20	<56		<200	<316	
7	02E0257-003.002	<0.017	0	<0.017	<20	<56		<200	<316	
NA	NA	NA	NA	NA	NA	NA		NA	NA	
NA	NA	NA	NA	NA	NA	NA	NA	NA	NA	NA

Date Reviewed: 9-17-02 **RS Supervision:** [signature] / [signature]
Print Name Signature

[redacted]

157

ROCKY FLATS ENVIRONMENTAL TECHNOLOGY SITE

INSTRUMENT DATA

Mfg.	Eberline	Mfg.	Eberline	Mfg.	NE Electra
Model	SAC-4	Model	BC-4	Model	DP-6
Serial #	824	Serial #	700	Serial #	1366
Cal Due	10/1/02	Cal Due	12/13/02	Cal Due	2/1/03
Bkg	0.2 cpmα	Bkg	33.8 cpmβ	Bkg	5 cpmα
Eff.	33 %	Eff.	25 %	Eff.	20.4 %
MDA	20 dpmα	MDA	200 dpmβ	MDA	64 dpmα

Mfg.	Eberline	Mfg.	Eberline	Mfg.	NE Electra
Model	SAC-4	Model	BC-4	Model	DP-6
Serial #	NA	Serial #	NA	Serial #	1366
Cal Due	NA	Cal Due	NA	Cal Due	2/1/03
Bkg	NA cpmα	Bkg	NA cpmβ	Bkg	336 cpmβ
Eff.	33 %	Eff.	25 %	Eff.	28.2 %
MDA	20 dpmα	MDA	200 dpmβ	MDA	312 dpmβ

Survey Type:

Building: 788 footers/ N.E. Corner

Location: Solar ponds

Purpose: Characterization

RWP #: 02-RISS-020

Date: 9/17/02 Time: 1700

[redacted]

RCT: NA / NA / NA

Print name Signature Emp. #

PRN/REN # : NA

Comments: 100 % scan, one minute pats, and smears.

SURVEY RESULTS

Swipe #	LOCATION	ALPHA Swipe dpm/100cm2	ALPHA Direct dpm/100cm2	ALPHA Wipe dpm/wipe	BETA Swipe dpm/100cm2	BETA Direct dpm/100cm2	BETA Wipe dpm/wipe
1	Footers	<20	127	NA	<200	1298	NA
2	Footers	<20	161		<200	1027	
3	Footers	<20	220		<200	1110	
4	Footers	<20	117		<200	979	
5	Footers	<20	176		<200	1248	
6	Footers	<20	142		<200	766	
7	Footers	<20	181		<200	1067	
NA	NA	NA	NA		NA	NA	
NA	NA	NA	NA	NA	NA	NA	NA

Date Reviewed: [illegible] **RS Supervision:** [illegible] [redacted]

Print Name Signature

ROCKY FLATS ENVIRONMENTAL TECHNOLOGY SITE

Drawing Showing Survey Points

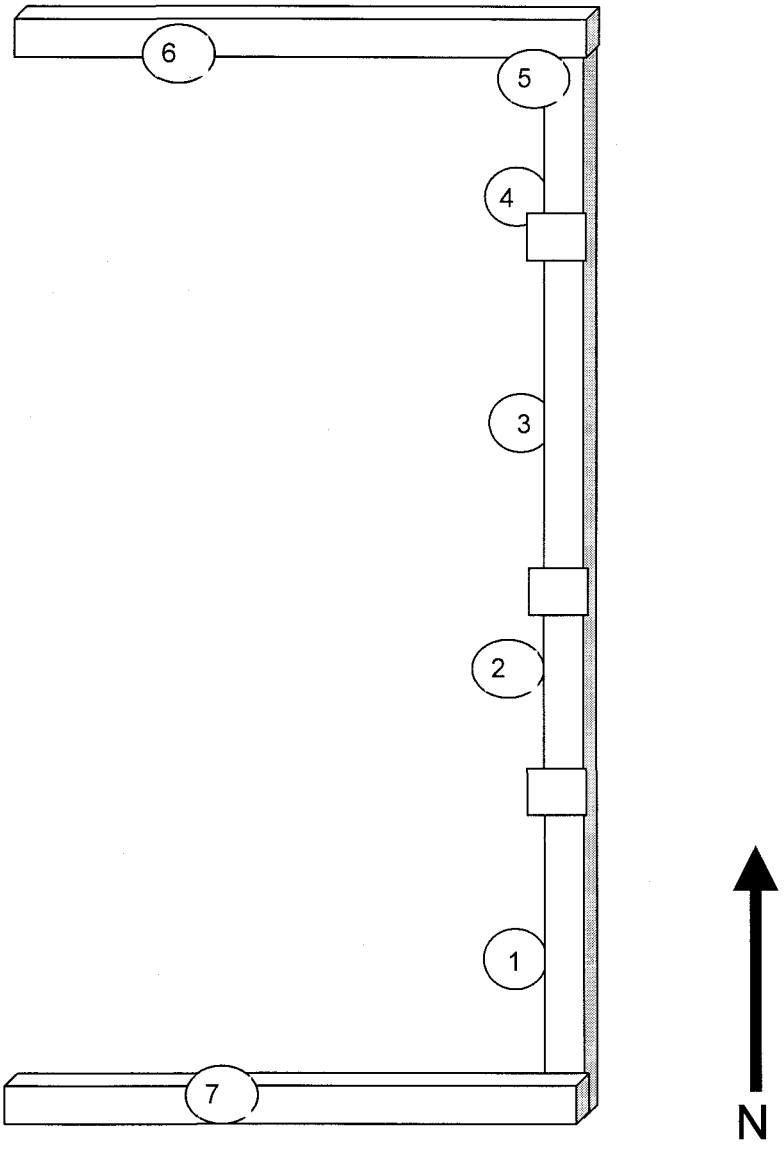

ROCKY FLATS ENVIRONMENTAL TECHNOLOGY SITE

INSTRUMENT DATA

Mfg.	Eberline	Mfg.	Eberline	Mfg.	NE Electra
Model	SAC-4	Model	BC-4	Model	DP-6
Serial #	824	Serial #	700	Serial #	1366
Cal Due	10/1/02	Cal Due	12/13/02	Cal Due	2/1/03
Bkg	0.5 cpmα	Bkg	32.7 cpmβ	Bkg	1 cpmα
Eff.	33 %	Eff.	25 %	Eff.	20.4 %
MDA	20 dpmα	MDA	200 dpmβ	MDA	36 dpmα

Mfg.	Eberline	Mfg.	Eberline	Mfg.	NE Electra
Model	SAC-4	Model	BC-4	Model	DP-6
Serial #	NA	Serial #	NA	Serial #	1366
Cal Due	NA	Cal Due	NA	Cal Due	2/1/03
Bkg	NA cpmα	Bkg	NA cpmβ	Bkg	322 cpmβ
Eff.	33 %	Eff.	25 %	Eff.	28.2 %
MDA	20 dpmα	MDA	200 dpmβ	MDA	306 dpmβ

Survey Type:

Building: 788

Location: Solar ponds

Purpose: daily

RWP #: 02-RISS-020

Date: 9/16/02 Time: 1500

[redacted]

RCT: NA / NA / NA

Print name Signature Emp. #

PRN/REN # : NA

Comments: NA

SURVEY RESULTS

Swipe #	LOCATION	ALPHA Swipe dpm/100cm2	ALPHA Direct dpm/100cm2	ALPHA Wipe dpm/wipe	BETA Swipe dpm/100cm2	BETA Direct dpm/100cm2	BETA Wipe dpm/wipe
1	Loader	<20	<36	NA	<200	<306	NA
2	Loader	<20	<36		<200	<306	
3	Loader	<20	<36		<200	<306	
4	Loader	<20	<36		<200	<306	
5	Loader	<20	<36		<200	<306	
6	backhoe	<20	<36		<200	<306	
7	backhoe	<20	<36		<200	<306	
8	backhoe	<20	<36		<200	<306	
9	backhoe	<20	<36		<200	<306	
10	backhoe	<20	<36		<200	<306	
11	Excavator	<20	<36		<200	<306	
12	Excavator	<20	<36		<200	<306	
13	Excavator	<20	<36		<200	<306	
14	Excavator	<20	<36		<200	<306	
15	Excavator	<20	<36		<200	<306	
NA	NA	NA	NA		NA	NA	
NA	NA	NA	NA	NA	NA	NA	NA

Date Reviewed: 9-20-02 **RS Supervision:** S Lorenzo / [signature]

Print Name Signature

[redacted]

160

Drawing Showing Survey Points

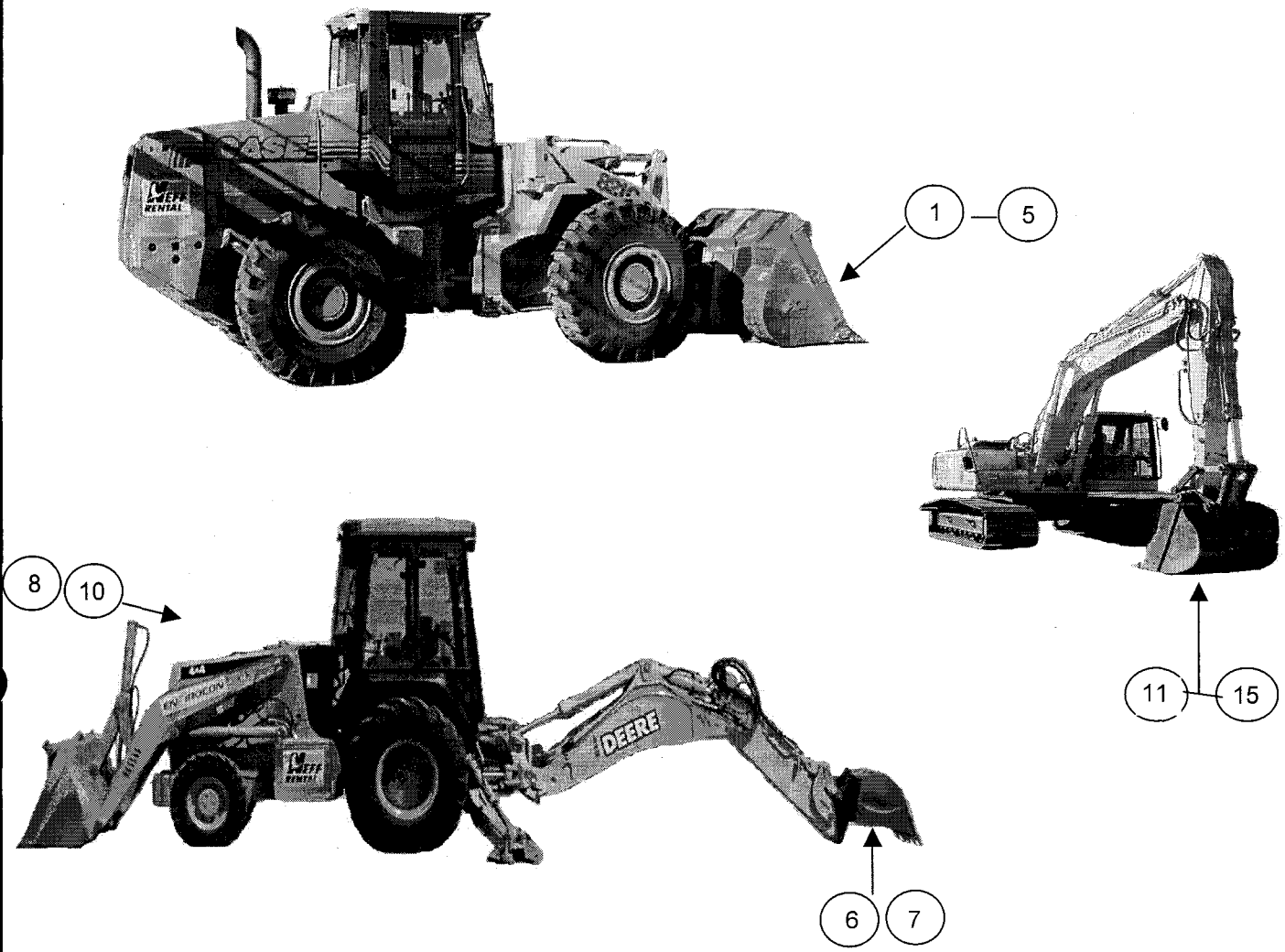

161

ROCKY FLATS ENVIRONMENTAL TECHNOLOGY SITE

INSTRUMENT DATA

Mfg.	Eberline	Mfg.	Eberline	Mfg.	NE Electra
Model	SAC-4	Model	SAC-4	Model	DP-6
Serial #	824	Serial #	963	Serial #	1672
Cal Due	10/1/02	Cal Due	1/3/03	Cal Due	2/12/03
Bkg.	0.4 cpm α	Bkg.	0.4 cpm α	Bkg.	4 cpm α
Efficiency	33.0 %	Efficiency	33.0 %	Efficiency	22.0 %
MDA	20 dpm α	MDA	20 dpm α	MDA	55 dpm α

Mfg.	Eberline	Mfg.	Eberline	Mfg.	NE Electra
Model	BC-4	Model	BC-4	Model	DP-6
Serial #	702	Serial #	700	Serial #	1672
Cal Due	7/22/03	Cal Due	12/13/02	Cal Due	2/13/02
Bkg.	36.0 cpm β	Bkg.	32.7 cpm β	Bkg.	447 cpm β
Efficiency	25.0 %	Efficiency	25.0 %	Efficiency	30.7 %
MDA	200 dpm β	MDA	200 dpm β	MDA	329 dpm β

Survey type: Contamination
Building: NA
Location: Solar Ponds
Purpose: Release Survey
RWP #: 02-RISS-0020
Date: 9/16/02 Time: 1030

[redacted]

PRN/REN # :
Comments: Performed survey on process waste line supports prior to disposing of as sanitary waste.

SURVEY RESULTS

Swipe #	LOCATION/DESCRIPTION	ALPHA			BETA		
		Swipe	Direct	Wipe	Swipe	Direct	Wipe
		dpm/100cm2	dpm/100cm2	dpm/wipe	dpm/100cm2	dpm/100cm2	dpm/wipe
1	Pipe Support	<20	<55	NA	<200	<329	NA
2	Pipe Support	<20	<55		<200	<329	
3	Pipe Support	<20	<55		<200	<329	
4	Pipe Support	<20	<55		<200	<329	
5	Pipe Support	<20	<55		<200	<329	
6	Pipe Support	<20	<55		<200	<329	
7	Pipe Support	<20	<55		<200	<329	
8	Pipe Support	<20	<55		<200	<329	
9	Pipe Support	<20	<55		<200	<329	
10	Pipe Support	<20	<55		<200	<329	
11	Pipe Support	<20	<55		<200	<329	
12	Pipe Support	<20	<55		<200	<329	
13	Pipe Support	<20	<55		<200	<329	
14	Pipe Support	<20	<55		<200	<329	
15	Pipe Support	<20	<55		<200	<329	
16	Pipe Support	<20	<55		<200	<329	
17	Pipe Support	<20	<55		<200	<329	
18	Pipe Support	<20	<55		<200	<329	
19	Pipe Support	<20	<55	▼	<200	<329	▼
20	Pipe Support	<20	<55	NA	<200	<329	NA

Date Reviewed: 9-17-02 **RS Supervision:** James W Smith / James W Smith [redacted]
Print Name Signature

167

ROCKY FLATS ENVIRONMENTAL TECHNOLOGY SITE

Drawing Showing Survey Points

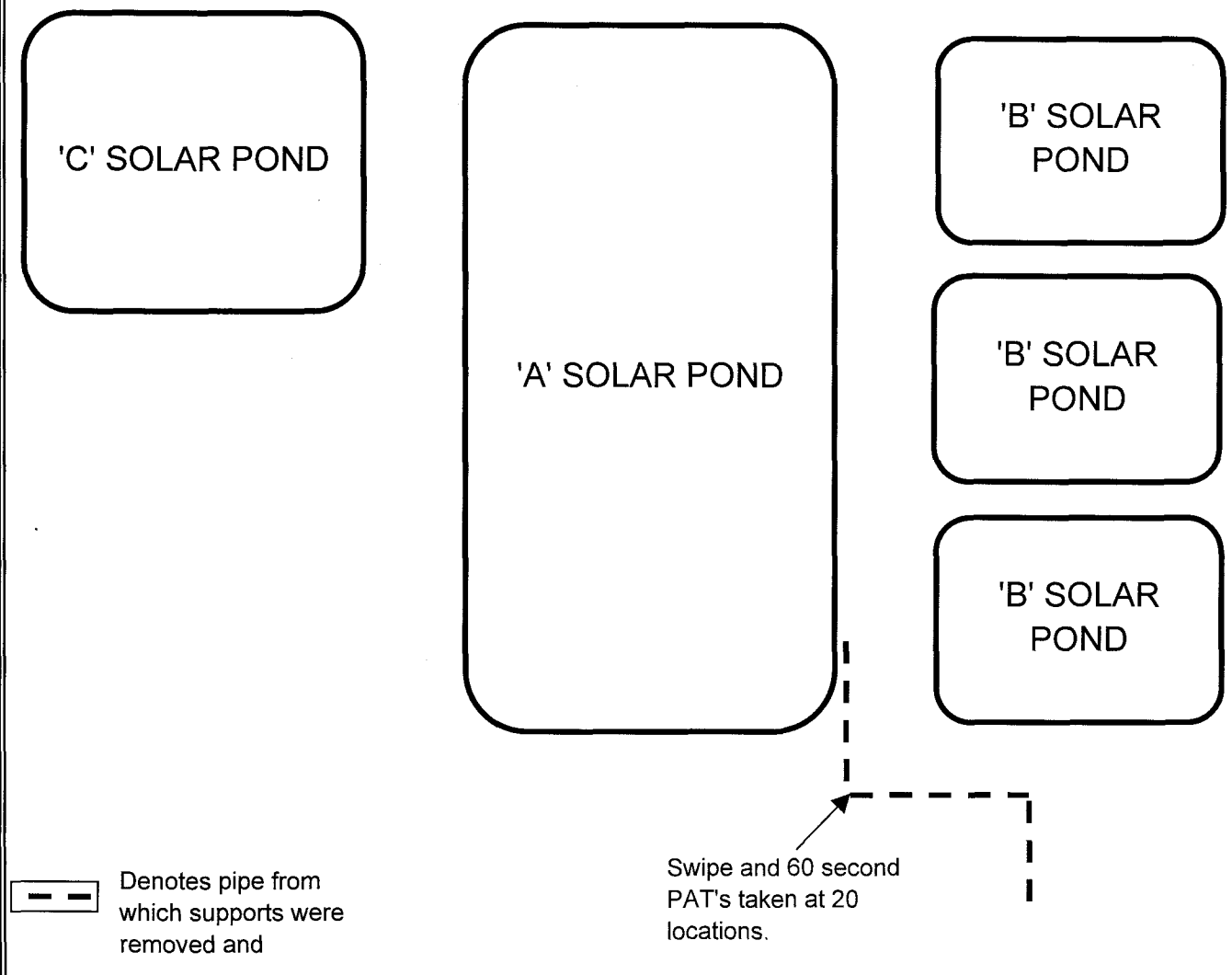

ROCKY FLATS ENVIRONMENTAL TECHNOLOGY SITE

INSTRUMENT DATA

Mfg.	Eberline	Mfg.	Eberline	Mfg.	NE Electra
Model	SAC-4	Model	BC-4	Model	DP-6
Serial #	824	Serial #	700	Serial #	2391
Cal Due	10/1/02	Cal Due	12/13/02	Cal Due	1/11/03
Bkg	0.5 cpmα	Bkg	33.2 cpmβ	Bkg	7 cpmα
Eff.	33 %	Eff.	25 %	Eff.	23.2 %
MDA	20 dpmα	MDA	200 dpmβ	MDA	65 dpmα

Mfg.	Eberline	Mfg.	Eberline	Mfg.	NE Electra
Model	SAC-4	Model	BC-4	Model	DP-6
Serial #	NA	Serial #	NA	Serial #	2391
Cal Due	NA	Cal Due	NA	Cal Due	1/11/03
Bkg	NA cpmα	Bkg	NA cpmβ	Bkg	326 cpmβ
Eff.	33 %	Eff.	25 %	Eff.	32.5 %
MDA	20 dpmα	MDA	200 dpmβ	MDA	267 dpmβ

Survey Type: Radiation/ Contamination
Building: 788 pad
Location: Solar ponds
Purpose: daily

RWP #: 02-RISS-020

Date: 9/13/02 Time: 1700

[redacted]

PRN/REN # : NA
Comments: NA

SURVEY RESULTS

Swipe #	LOCATION	ALPHA Swipe dpm/100cm2	ALPHA Direct dpm/100cm2	ALPHA Wipe dpm/wipe	BETA Swipe dpm/100cm2	BETA Direct dpm/100cm2	BETA Wipe dpm/wipe
1	Loader	<20	<65	NA	<200	<267	NA
2	Loader	<20	<65		<200	<267	
3	Loader	<20	<65		<200	<267	
4	Loader	<20	<65		<200	<267	
5	Loader	<20	<65		<200	<267	
6	Backhoe	<20	<65		<200	<267	
7	Backhoe	<20	<65		<200	<267	
8	Backhoe	<20	<65		<200	<267	
9	Backhoe	<20	<65		<200	<267	
10	Backhoe	<20	<65		<200	<267	
11	Excavator	<20	<65		<200	<267	
12	Excavator	<20	<65		<200	<267	
13	Excavator	<20	<65		<200	<267	
14	Excavator	<20	<65		<200	<267	
15	Excavator	<20	<65		<200	<267	
NA	NA	NA	NA		NA	NA	
NA	NA	NA	NA	NA	NA	NA	NA

Date Reviewed: 9-20-02 **RS Supervision:** [redacted]
Print Name Signature

Drawing Showing Survey Points

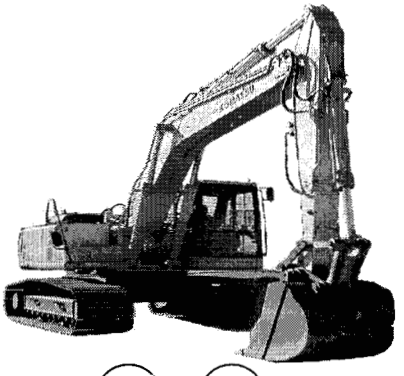

165

ROCKY FLATS ENVIRONMENTAL TECHNOLOGY SITE

INSTRUMENT DATA

Mfg.	Eberline	Mfg.	Eberline	Mfg.	NE Electra
Model	SAC-4	Model	BC-4	Model	DP-6
Serial #	966	Serial #	702	Serial #	2394
Cal Due	11/6/02	Cal Due	7/22/03	Cal Due	3/5/03
Bkg	0.5 cpmα	Bkg	31.5 cpmβ	Bkg	5 cpmα
Eff.	33 %	Eff.	25 %	Eff.	22.1 %
MDA	20 dpmα	MDA	200 dpmβ	MDA	59 dpmα
Mfg.	Eberline	Mfg.	Eberline	Mfg.	NE Electra
Model	SAC-4	Model	BC-4	Model	DP-6
Serial #	NA	Serial #	NA	Serial #	2394
Cal Due	NA	Cal Due	NA	Cal Due	3/5/03
Bkg	NA cpmα	Bkg	NA cpmβ	Bkg	455 cpmβ
Eff.	33 %	Eff.	25 %	Eff.	30.2 %
MDA	20 dpmα	MDA	200 dpmβ	MDA	337 dpmβ

Survey Type:

Building: 788

Location: Solar ponds

Purpose: daily

RWP #: 02-RISS-020

Date: 9/12/02 Time: 1500

[redacted]

RCT: NA / NA / NA

Print name Signature Emp. #

PRN/REN # : NA

Comments: NA

SURVEY RESULTS

Swipe #	LOCATION	ALPHA Swipe dpm/100cm2	ALPHA Direct dpm/100cm2	ALPHA Wipe dpm/wipe	BETA Swipe dpm/100cm2	BETA Direct dpm/100cm2	BETA Wipe dpm/wipe
1	Loader	<20	<59	NA	<200	<337	NA
2	Loader	<20	<59		<200	<337	
3	Loader	<20	<59		<200	<337	
4	Loader	<20	<59		<200	<337	
5	Loader	<20	<59		<200	<337	
6	backhoe	<20	<59		<200	<337	
7	backhoe	<20	<59		<200	<337	
8	backhoe	<20	<59		<200	<337	
9	backhoe	<20	<59		<200	<337	
10	backhoe	<20	<59		<200	<337	
11	Excavator	<20	<59		<200	<337	
12	Excavator	<20	<59		<200	<337	
13	Excavator	<20	<59		<200	<337	
14	Excavator	<20	<59		<200	<337	
15	Excavator	<20	<59		<200	<337	
16	finger	<20	<59		<200	<337	
17	finger	<20	<59		<200	<337	
18	finger	<20	<59		<200	<337	
19	finger	<20	<59		<200	<337	
20	finger	<20	<59	NA	<200	<337	NA

Date Reviewed: 9-20-02 **RS Supervision:** S Gorman / [redacted]

Print Name Signature

[redacted]

146

Drawing Showing Survey Points

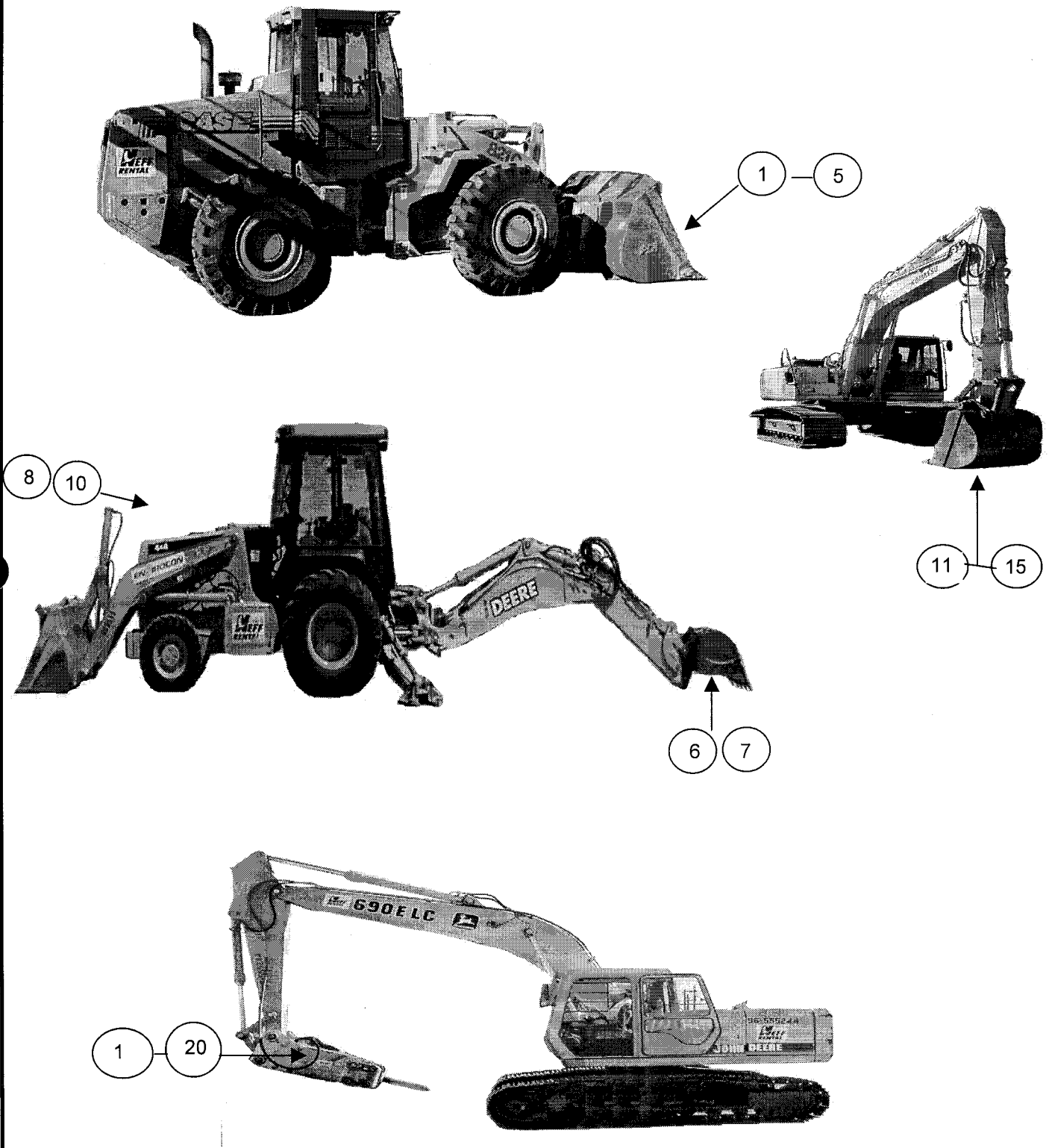

167

ROCKY FLATS ENVIRONMENTAL TECHNOLOGY SITE

INSTRUMENT DATA

Mfg.	Eberline	Mfg.	NE Electra	Mfg.	NE Electra
Model	SAC-4	Model	DP-6	Model	DP-6
Serial #	824	Serial #	1255	Serial #	2394
Cal Due	10/1/02	Cal Due	2/26/03	Cal Due	3/5/03
Bkg	0.4 cpmα	Bkg	2 cpmα	Bkg	3 cpmα
Eff.	33 %	Eff.	22.2 %	Eff.	22.1 %
MDA	20 dpmα	MDA	42 dpmα	MDA	49 dpmα

Mfg.	Eberline	Mfg.	NE Electra	Mfg.	NE Electra
Model	BC-4	Model	DP-6	Model	DP-6
Serial #	12/2/01	Serial #	1255	Serial #	2394
Cal Due	7/22/03	Cal Due	2/26/03	Cal Due	3/5/03
Bkg	36.0 cpmβ	Bkg	540 cpmβ	Bkg	522 cpmβ
Eff.	25 %	Eff.	29.6 %	Eff.	31.2 %
MDA	200 dpmβ	MDA	374 dpmβ	MDA	349 dpmβ

Survey Type: Contamination
Building: 788
Location: south footers
Purpose: Pre rip out

RWP #: 02-RISS-020

Date: 9/12/02 Time: 1400

[redacted]

PRN/REN # : NA
Comments: Swipes counted on 9/16/02.

SURVEY RESULTS

Swipe #	LOCATION See map	ALPHA Swipe dpm/100cm2	ALPHA Direct dpm/100cm2	ALPHA Wipe dpm/wipe	BETA Swipe dpm/100cm2	BETA Direct dpm/100cm2	BETA Wipe dpm/wipe
1	footer	< 20	32	NA	< 200	1156	NA
2	footer	< 20	63		< 200	1472	
3	footer	< 20	162		< 200	845	
4	footer	< 20	54		< 200	338	
5	footer	< 20	63		< 200	507	
6	footer	< 20	261		< 200	68	
7	footer	< 20	32		< 200	1397	
8	footer	< 20	23		< 200	1321	
9	footer	< 20	122		< 200	507	
10	footer	< 20	180		< 200	541	
11	footer	< 20	18		< 200	881	
12	footer	< 20	135		< 200	679	
13	footer	< 20	45		< 200	1414	
14	footer	< 20	59		< 200	1537	
15	footer	< 20	81		< 200	554	
NA	NA	NA	NA		NA	NA	
NA	NA	NA	NA		NA	NA	NA

Date Reviewed: 9-19-02 **RS Supervision:** S Gernatt / [signature]
Print Name Signature

[redacted]

168

ROCKY FLATS ENVIRONMENTAL TECHNOLOGY SITE

Drawing Showing Survey Points

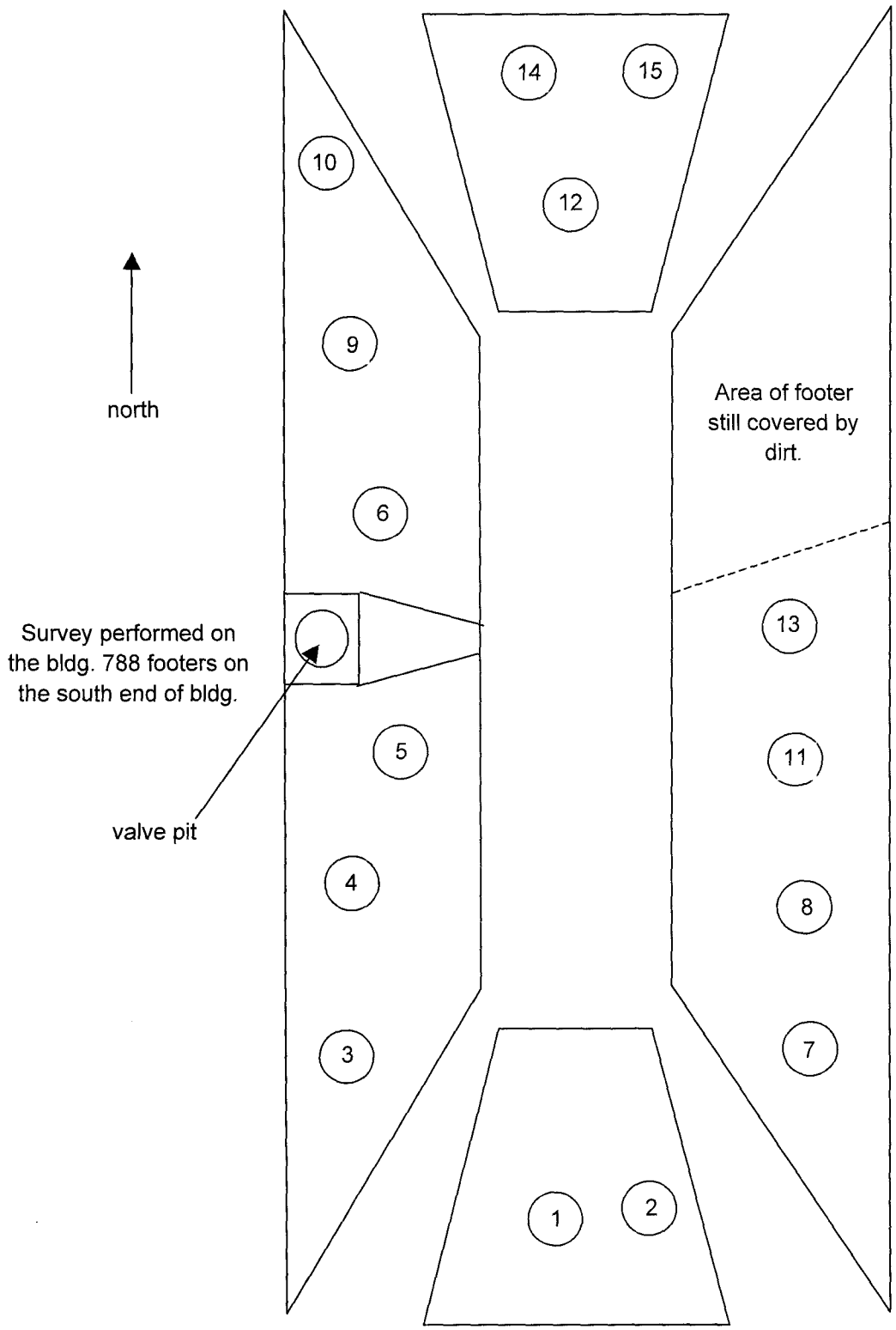

169

ROCKY FLATS ENVIRONMENTAL TECHNOLOGY SITE

INSTRUMENT DATA

Mfg.	Bicron	Mfg.	Eberline	Mfg.	NE Electra
Model	MicroRem	Model	SAC-4	Model	DP-6
Serial #	B710T	Serial #	8/23/02	Serial #	2394
Cal Due	1/30/03	Cal Due	11/6/02	Cal Due	3/5/03
Bkg	NA	Bkg.	0.5 cpm α	Bkg.	5 cpm α
Eff.	NA	Efficiency	33.0 %	Efficiency	22.1 %
MDDR	0.017 mr/hr	MDA	20 dpm α	MDA	59 dpm α
Mfg.	NA	Mfg.	Eberline	Mfg.	NE Electra
Model		Model	BC-4	Model	DP-6
Serial #		Serial #	702	Serial #	2394
Cal Due		Cal Due	7/22/03	Cal Due	3/5/03
Bkg		Bkg.	31.5 cpm β	Bkg.	455 cpm β
Eff.	▼	Efficiency	25 %	Efficiency	30.2 %
MDDR	NA	MDA	200 dpm β	MDA	337 dpm β

Survey Type: Radiation and Contamination

Building: NA

Location: Solar Ponds/T130I

Purpose: Release Eval for Soil Samples

RWP #: NA

Date: 9/12/02 Time: 1030

[redacted]

RCT: NA / NA / NA

Print name Signature Emp. #

PRN/REN # : 020626-T130C-002

Comments : None.

SURVEY RESULTS

#	Location/Description	Gamma/ X-Ray	Neutron	Total	Alpha Swipe	Alpha Direct	Alpha Wipe	Beta Swipe	Beta Direct	Beta Wipe
		mr/hr	mr/hr	mr/hr	dpm/100cm²	dpm/100cm²	dpm/wipe	dpm/100cm²	dpm/100cm	dpm/wipe
1	02E0246-001.001	<0.017	0	<0.017	<20	<59	NA	<200	<337	NA
2	02E0246-001.002	<0.017	0	<0.017	<20	<59		<200	<337	
3	02E0246-002.001	<0.017	0	<0.017	<20	<59		<200	<337	
4	02E0246-002.002	<0.017	0	<0.017	<20	<59		<200	<337	
5	02E0246-003.001	<0.017	0	<0.017	<20	<59		<200	<337	
6	02E0246-003.002	<0.017	0	<0.017	<20	<59		<200	<337	
7	02E0246-004.001	<0.017	0	<0.017	<20	<59		<200	<337	
8	02E0246-004.002	<0.017	0	<0.017	<20	<59		<200	<337	
9	02E0246-005.001	<0.017	0	<0.017	<20	<59		<200	<337	
10	02E0246-005.002	<0.017	0	<0.017	<20	<59		<200	<337	
11	02E0246-006.001	<0.017	0	<0.017	<20	<59		<200	<337	
12	02E0246-006.002	<0.017	0	<0.017	<20	<59		<200	<337	
13	02E0246-007.001	<0.017	0	<0.017	<20	<59		<200	<337	
14	02E0246-007.002	<0.017	0	<0.017	<20	<59		<200	<337	
15	02E0246-011.001	<0.017	0	<0.017	<20	<59		<200	<337	
16	02E0246-001.003	<0.017	0	<0.017	<20	<59		<200	<337	
17	02E0246-002.003	<0.017	0	<0.017	<20	<59		<200	<337	
18	02E0246-003.003	<0.017	0	<0.017	<20	<59		<200	<337	
19	02E0246-004.003	<0.017	0	<0.017	<20	<59	▼	<200	<337	▼
20	02E0246-005.003	<0.017	0	<0.017	<20	<59	NA	<200	<337	NA

Date Reviewed: 9-20-02 **RS Supervision:** S Coffman / [redacted]

Print Name Signature

170

ROCKY FLATS ENVIRONMENTAL TECHNOLOGY SITE

SURVEY RESULTS

#	Location/Description	Gamma/ X-Ray	Neutron	Total	Alpha Swipe	Alpha Direct	Alpha Wipe	Beta Swipe	Beta Direct	Beta Wipe
		mr/hr	mr/hr	mr/hr	dpm/100cm^2	dpm/100cm^2	dpm/wipe	dpm/100cm^2	dpm/100cm	dpm/wipe
21	02E0246-006.003	<0.017	0	<0.017	<20	<59	NA	<200	<337	NA
22	02E0246-007.003	<0.017	0	<0.017	<20	<59		<200	<337	
23	02E0246-011.002	<0.017	0	<0.017	<20	<59		<200	<337	
24	02E0246-011.003	<0.017	0	<0.017	<20	<59		<200	<337	
NA	NA	NA	NA	NA	NA	NA		NA	NA	
NA	NA	NA	NA	NA	NA	NA	NA	NA	NA	NA

ROCKY FLATS ENVIRONMENTAL TECHNOLOGY SITE

INSTRUMENT DATA

Mfg.	Eberline	Mfg.	Eberline	Mfg.	NE Electra
Model	SAC-4	Model	BC-4	Model	DP-6
Serial #	824	Serial #	704	Serial #	2391
Cal Due	10/1/02	Cal Due	10/30/02	Cal Due	1/11/03
Bkg	0.6 cpmα	Bkg	26.9 cpmβ	Bkg	4 cpmα
Eff.	33 %	Eff.	25 %	Eff.	23.2 %
MDA	20 dpmα	MDA	200 dpmβ	MDA	52 dpmα

Mfg.	Eberline	Mfg.	Eberline	Mfg.	NE Electra
Model	SAC-4	Model	BC-4	Model	DP-6
Serial #	NA	Serial #	NA	Serial #	2391
Cal Due	NA	Cal Due	NA	Cal Due	1/11/03
Bkg	NA cpmα	Bkg	NA cpmβ	Bkg	400 cpmβ
Eff.	33 %	Eff.	NA %	Eff.	32.5 %
MDA	20 dpmα	MDA	NA dpmβ	MDA	294 dpmβ

Survey Type: Contamination/ Radiation
Building: 788 Footers/ N.W. corner
Location: Solar Ponds
Purpose: Recycle

RWP #: 02-RISS-020

Date: 9/12/02 Time: 1700

[redacted]

PRN/REN # : NA
Comments: NA

SURVEY RESULTS

Swipe #	LOCATION	ALPHA Swipe dpm/100cm2	ALPHA Direct dpm/100cm2	ALPHA Wipe dpm/wipe	BETA Swipe dpm/100cm2	BETA Direct dpm/100cm2	BETA Wipe dpm/wipe
1	Threshold	33	1077	NA	124	1387	NA
2	Threshold	48	914		144	1403	
3	Threshold	30	241		140	1806	
4	Threshold	54	293		132	1224	
NA	NA	NA	NA		NA	NA	
NA	NA	NA	NA	NA	NA	NA	NA

Date Reviewed: 9-20-02 **RS Supervision:** [redacted]
Print Name Signature

17

ROCKY FLATS ENVIRONMENTAL TECHNOLOGY SITE

INSTRUMENT DATA

Mfg.	Eberline	Mfg.	Eberline	Mfg.	NE Electra
Model	SAC-4	Model	BC-4	Model	DP-6
Serial #	824	Serial #	704	Serial #	2391
Cal Due	10/1/02	Cal Due	10/30/02	Cal Due	1/11/02
Bkg	0.6 cpmα	Bkg	29 cpmβ	Bkg	2 cpmα
Eff.	33 %	Eff.	25 %	Eff.	23.2 %
MDA	20 dpmα	MDA	200 dpmβ	MDA	40 dpmα

Mfg.	Eberline	Mfg.	Eberline	Mfg.	NE Electra
Model	SAC-4	Model	BC-4	Model	DP-6
Serial #	NA	Serial #	NA	Serial #	2391
Cal Due	NA	Cal Due	NA	Cal Due	1/11/02
Bkg	NA cpmα	Bkg	NA cpmβ	Bkg	422 cpmβ
Eff.	33 %	Eff.	25 %	Eff.	32.5 %
MDA	20 dpmα	MDA	200 dpmβ	MDA	302 dpmβ

Survey Type: radiation/ Contamination
Building: 788 pad
Location: Solar ponds
Purpose: daily

RWP #: 02-RISS-020

Date: 9/11/02 Time: 1700

[redacted]

PRN/REN # : NA
Comments: NA

SURVEY RESULTS

Swipe #	LOCATION	ALPHA Swipe dpm/100cm2	ALPHA Direct dpm/100cm2	ALPHA Wipe dpm/wipe	BETA Swipe dpm/100cm2	BETA Direct dpm/100cm2	BETA Wipe dpm/wipe
1	Loader	<20	<40	NA	<200	<302	NA
2	Loader	<20	<40		<200	<302	
3	Loader	<20	<40		<200	<302	
4	Loader	<20	<40		<200	<302	
5	Loader	<20	<40		<200	<302	
6	Backhoe	<20	<40		<200	<302	
7	Backhoe	<20	<40		<200	<302	
8	Backhoe	<20	<40		<200	<302	
9	Backhoe	<20	<40		<200	<302	
10	Backhoe	<20	<40		<200	<302	
11	Excavator	<20	<40		<200	<302	
12	Excavator	<20	<40		<200	<302	
13	Excavator	<20	<40		<200	<302	
14	Excavator	<20	<40		<200	<302	
15	Excavator	<20	<40		<200	<302	
16	Finger	<20	<40		<200	<302	
17	Finger	<20	<40		<200	<302	
18	Finger	<20	<40		<200	<302	
19	Finger	<20	<40		<200	<302	
20	Finger	<20	<40	NA	<200	<302	NA

Date Reviewed: 9-20-02 **RS Supervision:** S/G/A/N Smith / [redacted]
Print Name Signature

ROCKY FLATS ENVIRONMENTAL TECHNOLOGY SITE

Drawing Showing Survey Points

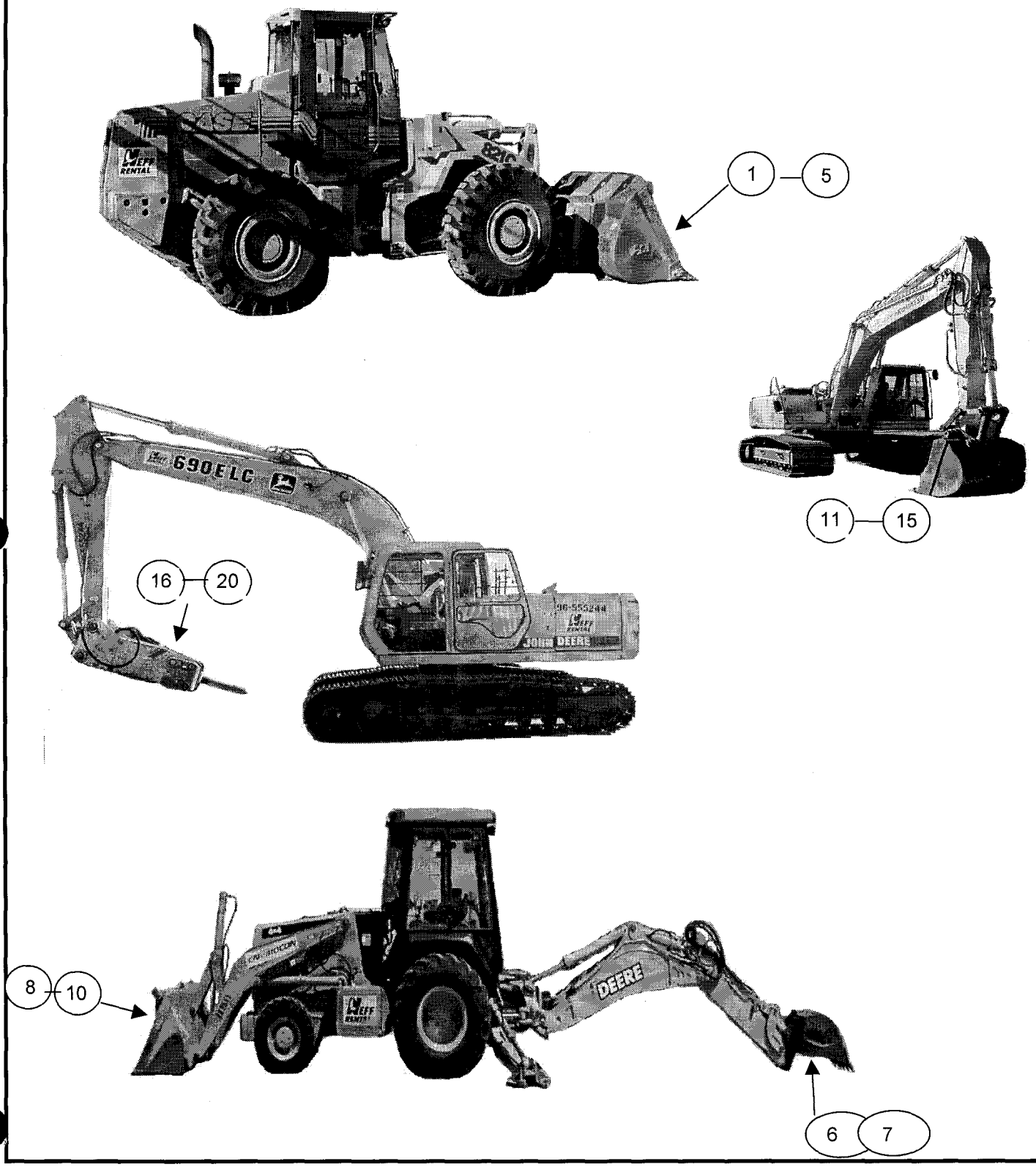

174

ROCKY FLATS ENVIRONMENTAL TECHNOLOGY SITE

INSTRUMENT DATA

Mfg.	Eberline	Mfg.	Eberline	Mfg.	NE Electra
Model	SAC-4	Model	BC-4	Model	DP-6
Serial #	824	Serial #	704	Serial #	2391
Cal Due	10/1/02	Cal Due	10/30/02	Cal Due	1/11/03
Bkg	0.6 cpmα	Bkg	29 cpmβ	Bkg	2 cpmα
Eff.	33 %	Eff.	25 %	Eff.	23.2 %
MDA	20 dpmα	MDA	200 dpmβ	MDA	40 dpmα

Mfg.	Eberline	Mfg.	Eberline	Mfg.	NE Electra
Model	SAC-4	Model	BC-4	Model	DP-6
Serial #	NA	Serial #	NA	Serial #	2391
Cal Due	NA	Cal Due	NA	Cal Due	1/11/03
Bkg	NA cpmα	Bkg	NA cpmβ	Bkg	422 cpmβ
Eff.	33 %	Eff.	25 %	Eff.	32.5 %
MDA	20 dpmα	MDA	200 dpmβ	MDA	302 dpmβ

Survey Type:

Building: 788 footers/ N.W. Corner

Location: Solar ponds

Purpose: Recycle

RWP #: 02-RISS-020

Date: 9/11/02 Time: 1700

[redacted]

RCT: NA / NA / NA

Print name Signature Emp. #

PRN/REN # : NA

Comments: 100 % scan, one minute pats, and smears.

SURVEY RESULTS

Swipe #	LOCATION	ALPHA Swipe dpm/100cm2	ALPHA Direct dpm/100cm2	ALPHA Wipe dpm/wipe	BETA Swipe dpm/100cm2	BETA Direct dpm/100cm2	BETA Wipe dpm/wipe
1	Footers	<20	<40	NA	<200	<302	NA
2	Footers	<20	<40		<200	<302	
3	Footers	<20	<40		<200	<302	
4	Footers	<20	<40		<200	<302	
5	Footers	<20	<40		<200	<302	
6	Footers	<20	<40		<200	<302	
7	Footers	<20	<40		<200	<302	
8	Footers	<20	<40		<200	<302	
9	Footers	<20	<40		<200	<302	
10	Footers	<20	<40		<200	<302	
11	Footers	<20	<40		<200	<302	
12	Footers	<20	<40		<200	<302	
13	Footers	<20	<40		<200	<302	
14	Footers	<20	<40		<200	<302	
15	Footers	<20	<40		<200	<302	
NA	NA	NA	NA		NA	NA	
NA	NA	NA	NA		NA	NA	
NA	NA	NA	NA		NA	NA	
NA	NA	NA	NA		NA	NA	
NA	NA	NA	NA	NA	NA	NA	NA

Date Reviewed: 9-12-02 **RS Supervision:** JW Smith [redacted]

Print Name Signature

176

ROCKY FLATS ENVIRONMENTAL TECHNOLOGY SITE

Drawing Showing Survey Points

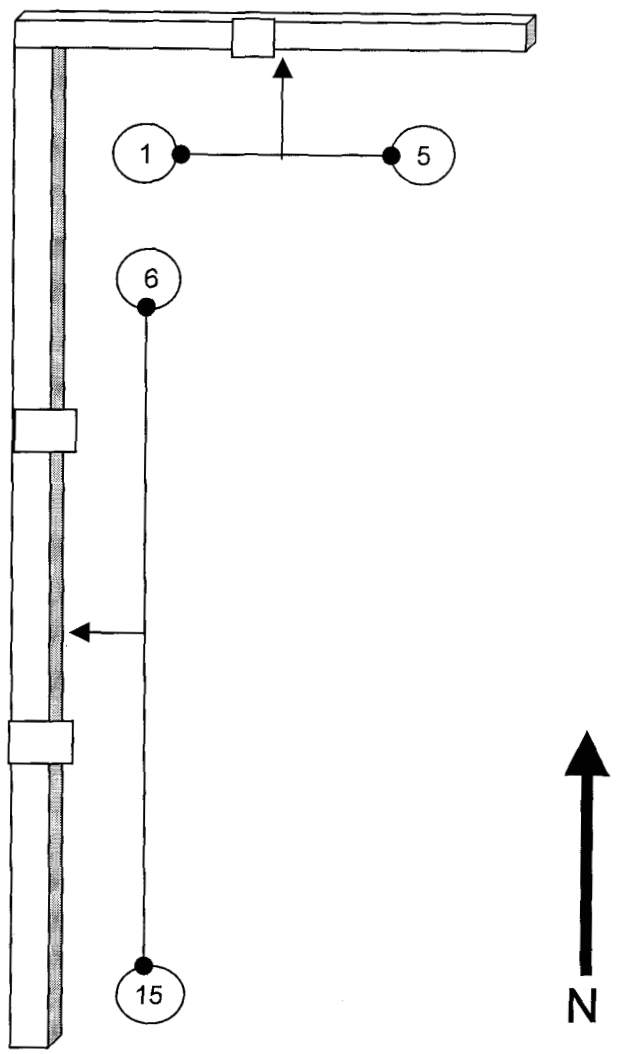

176

ROCKY FLATS ENVIRONMENTAL TECHNOLOGY SITE

INSTRUMENT DATA

Mfg.	Eberline	Mfg.	Eberline	Mfg.	NE Electra
Model	SAC-4	Model	BC-4	Model	DP-6
Serial #	824	Serial #	702	Serial #	2391
Cal Due	10/1/02	Cal Due	7/22/03	Cal Due	1/11/03
Bkg	0.2 cpmα	Bkg	29.8 cpmβ	Bkg	5 cpmα
Eff.	33 %	Eff.	25 %	Eff.	23.2 %
MDA	20 dpmα	MDA	200 dpmβ	MDA	56 dpmα

Mfg.	Eberline	Mfg.	Eberline	Mfg.	NE Electra
Model	SAC-4	Model	BC-4	Model	DP-6
Serial #	NA	Serial #	NA	Serial #	2391
Cal Due	NA	Cal Due	NA	Cal Due	1/11/03
Bkg	NA cpmα	Bkg	NA cpmβ	Bkg	423 cpmβ
Eff.	33 %	Eff.	25 %	Eff.	32.5 %
MDA	20 dpmα	MDA	200 dpmβ	MDA	303 dpmβ

Survey Type:

Building: 788

Location: Solar ponds

Purpose: daily

RWP #: 02-RISS-020

Date: 9/10/02 Time: 1500

[redacted]

Print name Signature Emp. #

PRN/REN # : NA

Comments: NA

SURVEY RESULTS

Swipe #	LOCATION	ALPHA Swipe dpm/100cm2	ALPHA Direct dpm/100cm2	ALPHA Wipe dpm/wipe	BETA Swipe dpm/100cm2	BETA Direct dpm/100cm2	BETA Wipe dpm/wipe
1	Loader	<20	<56	NA	<200	<303	NA
2	Loader	<20	<56		<200	<303	
3	Loader	<20	<56		<200	<303	
4	Loader	<20	<56		<200	<303	
5	Loader	<20	<56		<200	<303	
6	backhoe	<20	<56		<200	<303	
7	backhoe	<20	<56		<200	<303	
8	backhoe	<20	<56		<200	<303	
9	backhoe	<20	<56		<200	<303	
10	backhoe	<20	<56		<200	<303	
11	Excavator	<20	<56		<200	<303	
12	Excavator	<20	<56		<200	<303	
13	Excavator	<20	<56		<200	<303	
14	Excavator	<20	<56		<200	<303	
15	Excavator	<20	<56		<200	<303	
16	finger	<20	<56		<200	<303	
17	finger	<20	<56		<200	<303	
18	finger	<20	<56		<200	<303	
19	finger	<20	<56		<200	<303	
20	finger	<20	<56	NA	<200	<303	NA

Date Reviewed: 9-20-02 **RS Supervision:** S Gernhart / [signature] [redacted]

Print Name Signature

Drawing Showing Survey Points

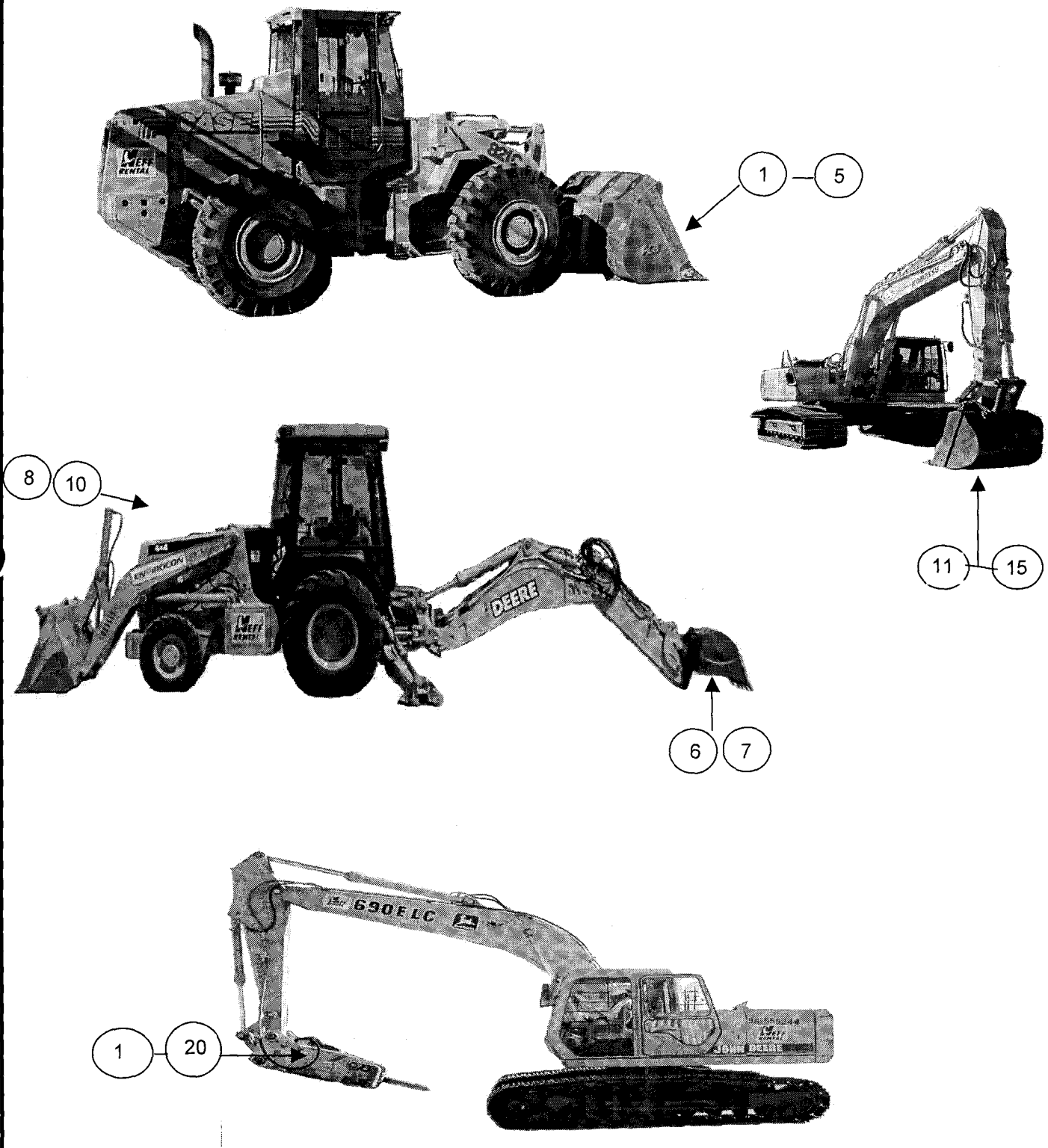

ROCKY FLATS ENVIRONMENTAL TECHNOLOGY SITE

INSTRUMENT DATA

Mfg.	Eberline	Mfg.	Eberline	Mfg.	NE Electra
Model	SAC-4	Model	BC-4	Model	DP-6
Serial #	824	Serial #	702	Serial #	2394
Cal Due	10/1/02	Cal Due	7/22/02	Cal Due	3/5/02
Bkg	0.1 cpmα	Bkg	32.5 cpmβ	Bkg	2 cpmα
Eff.	33 %	Eff.	25 %	Eff.	22.1 %
MDA	20 dpmα	MDA	200 dpmβ	MDA	42 dpmα

Mfg.	Eberline	Mfg.	Eberline	Mfg.	NE Electra
Model	SAC-4	Model	BC-4	Model	DP-6
Serial #	NA	Serial #	NA	Serial #	2394
Cal Due	NA	Cal Due	NA	Cal Due	3/5/02
Bkg	NA cpmα	Bkg	NA cpmβ	Bkg	325 cpmβ
Eff.	33 %	Eff.	25 %	Eff.	30.2 %
MDA	20 dpmα	MDA	200 dpmβ	MDA	287 dpmβ

Survey Type: Contamination / Radiation

Building: North West loading dock

Location: underside

Purpose: Recycle

RWP #: 02-RISS-020

Date: 9/9/02 Time: 1500

[redacted]

RCT: NA / NA / NA

Print name / Signature / Emp. #

PRN/REN # : NA

Comments: NA

SURVEY RESULTS

Swipe #	LOCATION	ALPHA Swipe dpm/100cm2	ALPHA Direct dpm/100cm2	ALPHA Wipe dpm/wipe	BETA Swipe dpm/100cm2	BETA Direct dpm/100cm2	BETA Wipe dpm/wipe
1	Concrete	0	40	NA	0	858	NA
2	Concrete	3	77		20	403	
3	Concrete	0	50		0	831	
4	Concrete	3	59		0	1175	
5	Concrete	0	14		12	1047	
6	Concrete	0	50		4	831	
7	Concrete	0	72		0	738	
8	Concrete	6	32		0	1000	
9	Concrete	0	72		0	960	
10	Concrete	0	45		12	1096	
11	Concrete	0	27		0	738	
12	Concrete	0	59		16	467	
13	Concrete	3	23		0	1139	
14	Concrete	3	32		0	685	
15	Concrete	0	18		2	669	
NA	NA	NA	NA		NA	NA	
NA	NA	NA	NA	NA	NA	NA	NA

Date Reviewed: 9-9-02 **RS Supervision:** J.W. Smith / [redacted]

Print Name / Signature

179

ROCKY FLATS ENVIRONMENTAL TECHNOLOGY SITE

Drawing Showing Survey Points

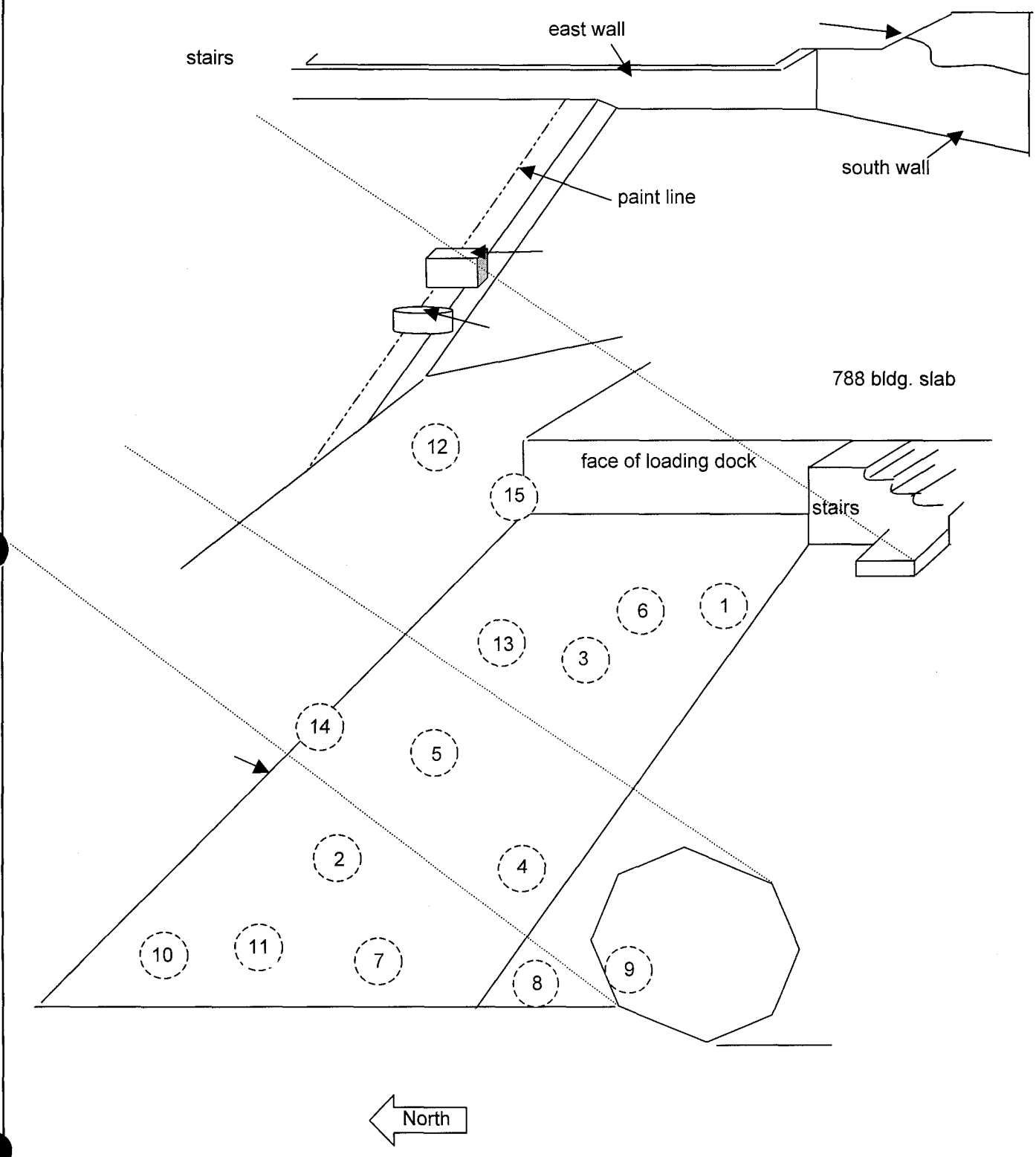

180

ROCKY FLATS ENVIRONMENTAL TECHNOLOGY SITE

INSTRUMENT DATA

Mfg.	Eberline	Mfg.	Eberline	Mfg.	NE Electra
Model	SAC-4	Model	BC-4	Model	DP-6
Serial #	824	Serial #	702	Serial #	2394
Cal Due	10/1/02	Cal Due	7/22/03	Cal Due	3/5/03
Bkg	0.1 cpmα	Bkg	32.5 cpmβ	Bkg	2 cpmα
Eff.	33 %	Eff.	25 %	Eff.	22.1 %
MDA	20 dpmα	MDA	200 dpmβ	MDA	42 dpmα
Mfg.	Eberline	Mfg.	Eberline	Mfg.	NE Electra
Model	SAC-4	Model	BC-4	Model	DP-6
Serial #	NA	Serial #	NA	Serial #	2394
Cal Due	NA	Cal Due	NA	Cal Due	3/5/03
Bkg	NA cpmα	Bkg	NA cpmβ	Bkg	325 cpmβ
Eff.	33 %	Eff.	25 %	Eff.	30.2 %
MDA	20 dpmα	MDA	200 dpmβ	MDA	287 dpmβ

Survey Type:
Building: 788
Location: Solar ponds
Purpose: daily

RWP #: 02-RISS-020

Date: 9/9/02 Time: 1500

[redacted]

RCT: NA / NA / NA
Print name / Signature / Emp. #

PRN/REN # : NA
Comments: NA

SURVEY RESULTS

Swipe #	LOCATION	ALPHA Swipe dpm/100cm2	ALPHA Direct dpm/100cm2	ALPHA Wipe dpm/wipe	BETA Swipe dpm/100cm2	BETA Direct dpm/100cm2	BETA Wipe dpm/wipe
1	Loader	<20	<42	NA	<200	<287	NA
2	Loader	<20	<42		<200	<287	
3	Loader	<20	<42		<200	<287	
4	Loader	<20	<42		<200	<287	
5	Loader	<20	<42		<200	<287	
6	backhoe	<20	<42		<200	<287	
7	backhoe	<20	<42		<200	<287	
8	backhoe	<20	<42		<200	<287	
9	backhoe	<20	<42		<200	<287	
10	backhoe	<20	<42		<200	<287	
11	Excavator	<20	<42		<200	<287	
12	Excavator	<20	<42		<200	<287	
13	Excavator	<20	<42		<200	<287	
14	Excavator	<20	<42		<200	<287	
15	Excavator	<20	<42		<200	<287	
16	finger	<20	<42		<200	<287	
17	finger	<20	<42		<200	<287	
18	finger	<20	<42		<200	<287	
19	finger	<20	<42		<200	<287	
20	finger	<20	<42	NA	<200	<287	NA

Date Reviewed: 9-20-02 **RS Supervision:** [redacted]
Print Name Signature

181

Drawing Showing Survey Points

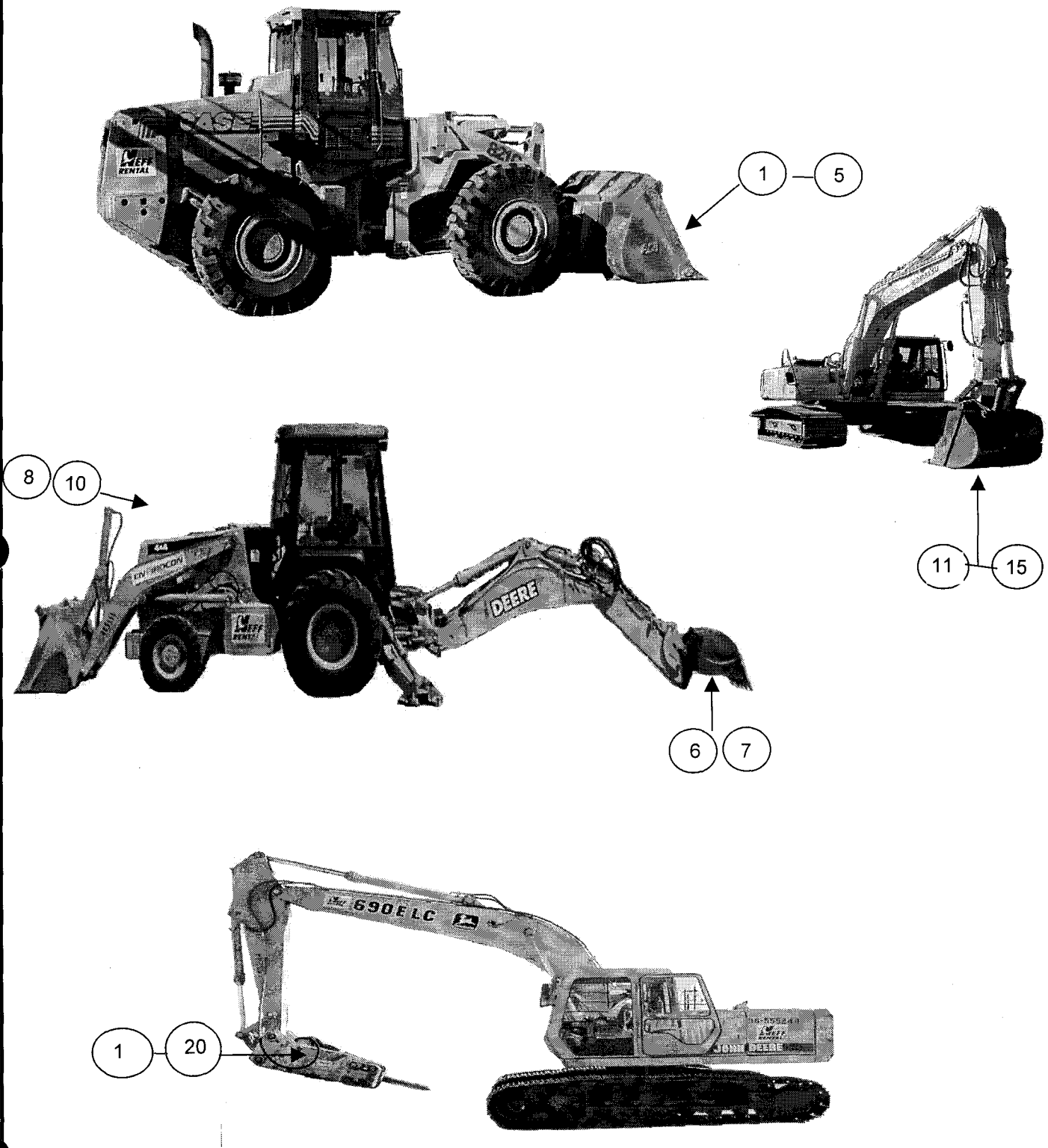

ROCKY FLATS ENVIRONMENTAL TECHNOLOGY SITE

INSTRUMENT DATA

Mfg.	Eberline	Mfg.	Eberline	Mfg.	NE Electra
Model	SAC-4	Model	BC-4	Model	DP-6
Serial #	824	Serial #	702	Serial #	2394
Cal Due	10/1/02	Cal Due	7/22/02	Cal Due	3/5/02
Bkg	0.1 cpmα	Bkg	32.5 cpmβ	Bkg	2 cpmα
Eff.	33 %	Eff.	25 %	Eff.	22.1 %
MDA	20 dpmα	MDA	200 dpmβ	MDA	42 dpmα

Mfg.	Eberline	Mfg.	Eberline	Mfg.	NE Electra
Model	SAC-4	Model	BC-4	Model	DP-6
Serial #	NA	Serial #	NA	Serial #	2394
Cal Due	NA	Cal Due	NA	Cal Due	3/5/02
Bkg	NA cpmα	Bkg	NA cpmβ	Bkg	325 cpmβ
Eff.	33 %	Eff.	25 %	Eff.	30.2 %
MDA	20 dpmα	MDA	200 dpmβ	MDA	287 dpmβ

Survey Type: Contamination/ Radation
Building: 788
Location: inner footers under drain racks
Purpose: SCO

RWP #: 02-RISS-020

Date: 9/9/02 Time: 1500

[redacted]

RCT: NA / NA / NA
Print name Signature Emp. #

PRN/REN # : NA
Comments: NA

SURVEY RESULTS

Swipe #	LOCATION	ALPHA Swipe dpm/100cm2	ALPHA Direct dpm/100cm2	ALPHA Wipe dpm/wipe	BETA Swipe dpm/100cm2	BETA Direct dpm/100cm2	BETA Wipe dpm/wipe
1	Footers	0	172	NA	0	1162	NA
2	Footers	0	140		0	978	
3	Footers	0	262		2	962	
4	Footers	0	81		0	1137	
5	Footers	0	135		12	1284	
6	Footers	0	45		0	1132	
7	Footers	0	40		0	1274	
8	Footers	0	108		0	1129	
9	Footers	0	54		4	1023	
10	Footers	0	45		0	1042	
11	Footers	0	68		0	1174	
12	Footers	0	50		8	1049	
13	Footers	0	77		0	1098	
14	Footers	0	41		4	1139	
15	Footers	0	54		0	1191	
16	Footers	0	36		32	1208	
NA	NA	NA	NA		NA	NA	
NA	NA						
NA	NA						
NA	NA	NA	NA	NA	NA	NA	NA

Date Reviewed: 9-10-02 **RS Supervision:** [redacted]
Print Name Signature

183

Drawing Showing Survey Points

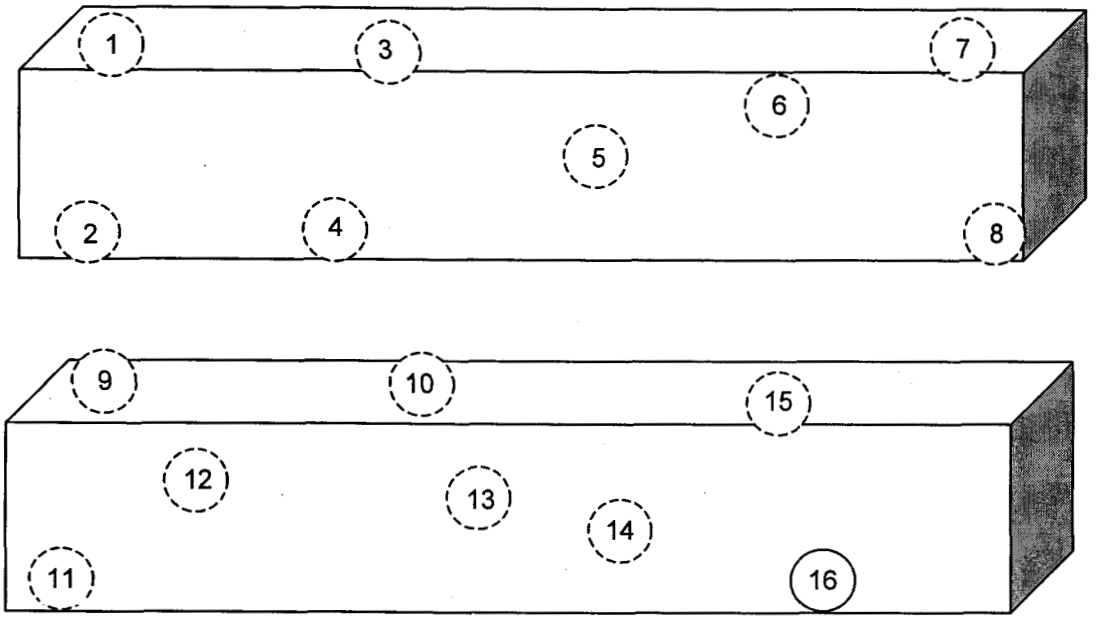

ROCKY FLATS ENVIRONMENTAL TECHNOLOGY SITE

INSTRUMENT DATA

Mfg.	Eberline	Mfg.	Eberline	Mfg.	NE Electra
Model	SAC-4	Model	BC-4	Model	DP-6
Serial #	824	Serial #	704	Serial #	1681
Cal Due	10/1/02	Cal Due	10/30/02	Cal Due	11/22/02
Bkg	0.1 cpmα	Bkg	31.9 cpmβ	Bkg	6 cpmα
Eff.	33 %	Eff.	25 %	Eff.	22.6 %
MDA	20 dpmα	MDA	200 dpmβ	MDA	62 dpmα

Mfg.	Eberline	Mfg.	Eberline	Mfg.	NE Electra
Model	SAC-4	Model	BC-4	Model	DP-6
Serial #	NA	Serial #	NA	Serial #	1681
Cal Due	NA	Cal Due	NA	Cal Due	11/22/02
Bkg	NA cpmα	Bkg	NA cpmβ	Bkg	432 cpmβ
Eff.	33 %	Eff.	25 %	Eff.	31.5 %
MDA	20 dpmα	MDA	200 dpmβ	MDA	315 dpmβ

Survey Type: radiation/ Contamination
Building: 788 pad
Location: Solar ponds
Purpose: daily

RWP #: 02-RISS-020

Date: 9/6/02 Time: 1700

[redacted]

RCT: NA / NA / NA
Print name / Signature / Emp. #

PRN/REN # : NA
Comments: NA

SURVEY RESULTS

Swipe #	LOCATION	ALPHA Swipe dpm/100cm2	ALPHA Direct dpm/100cm2	ALPHA Wipe dpm/wipe	BETA Swipe dpm/100cm2	BETA Direct dpm/100cm2	BETA Wipe dpm/wipe
1	Access Control	<20	<62	NA	<200	<315	NA
2	Access Control	<20	<62		<200	<315	
3	Access Control	<20	<62		<200	<315	
4	Access Control	<20	<62		<200	<315	
5	Access Control	<20	<62		<200	<315	
6	Access Control	<20	<62		<200	<315	
7	Access Control	<20	<62		<200	<315	
8	Access Control	<20	<62		<200	<315	
NA	NA	NA	NA		NA	NA	
NA	NA						
NA	NA						
NA	NA						
NA	NA						
NA	NA						
NA	NA						
NA	NA						
NA	NA						
NA	NA						
NA	NA						
NA	NA	NA	NA	NA	NA	NA	NA

Date Reviewed: 9-9-02 **RS Supervision:** J.W. Smith [redacted]
Print Name / Signature

185

Drawing Showing Survey Points

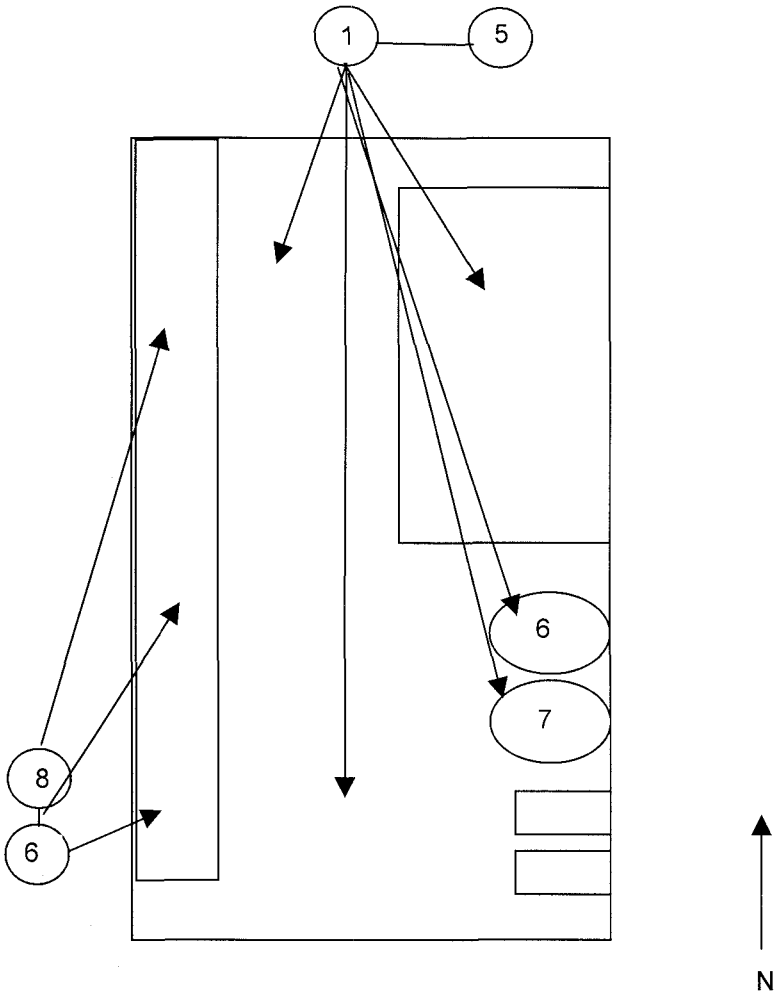

ROCKY FLATS ENVIRONMENTAL TECHNOLOGY SITE

INSTRUMENT DATA

Mfg.	Eberline	Mfg.	Eberline	Mfg.	NE Electra
Model	SAC-4	Model	BC-4	Model	DP-6
Serial #	824	Serial #	704	Serial #	1681
Cal Due	10/1/02	Cal Due	10/30/02	Cal Due	11/22/02
Bkg	0.1 cpmα	Bkg	31.9 cpmβ	Bkg	6 cpmα
Eff.	33 %	Eff.	25 %	Eff.	22.6 %
MDA	20 dpmα	MDA	200 dpmβ	MDA	62 dpmα
Mfg.	Eberline	Mfg.	Eberline	Mfg.	NE Electra
Model	SAC-4	Model	BC-4	Model	DP-6
Serial #	NA	Serial #	NA	Serial #	1681
Cal Due	NA	Cal Due	NA	Cal Due	11/22/02
Bkg	NA cpmα	Bkg	NA cpmβ	Bkg	432 cpmβ
Eff.	33 %	Eff.	25 %	Eff.	31.5 %
MDA	20 dpmα	MDA	200 dpmβ	MDA	315 dpmβ

Survey Type: radiation/ Contamination
Building: 788 pad
Location: Solar ponds
Purpose: daily

RWP #: 02-RISS-020

Date: 9/6/02 Time: 1700

[redacted]

RCT: NA / NA / NA
Print name Signature Emp. #

PRN/REN # : NA
Comments: NA

SURVEY RESULTS

Swipe #	LOCATION	ALPHA Swipe dpm/100cm2	ALPHA Direct dpm/100cm2	ALPHA Wipe dpm/wipe	BETA Swipe dpm/100cm2	BETA Direct dpm/100cm2	BETA Wipe dpm/wipe
1	Loader	<20	<62	NA	<200	<315	NA
2	Loader	<20	<62		<200	<315	
3	Loader	<20	<62		<200	<315	
4	Loader	<20	<62		<200	<315	
5	Loader	<20	<62		<200	<315	
6	Backhoe	<20	<62		<200	<315	
7	Backhoe	<20	<62		<200	<315	
8	Backhoe	<20	<62		<200	<315	
9	Backhoe	<20	<62		<200	<315	
10	Backhoe	<20	<62		<200	<315	
11	Excavator	<20	<62		<200	<315	
12	Excavator	<20	<62		<200	<315	
13	Excavator	<20	<62		<200	<315	
14	Excavator	<20	<62		<200	<315	
15	Excavator	<20	<62		<200	<315	
16	Finger	<20	<62		<200	<315	
17	Finger	<20	<62		<200	<315	
18	Finger	<20	<62		<200	<315	
19	Finger	<20	<62		<200	<315	
20	Finger	<20	<62	NA	<200	<315	NA

Date Reviewed: 9-9-02 **RS Supervision:** ~~S.W. Smith~~ / / [redacted]
Print Name Signature

187

ROCKY FLATS ENVIRONMENTAL TECHNOLOGY SITE

Drawing Showing Survey Points

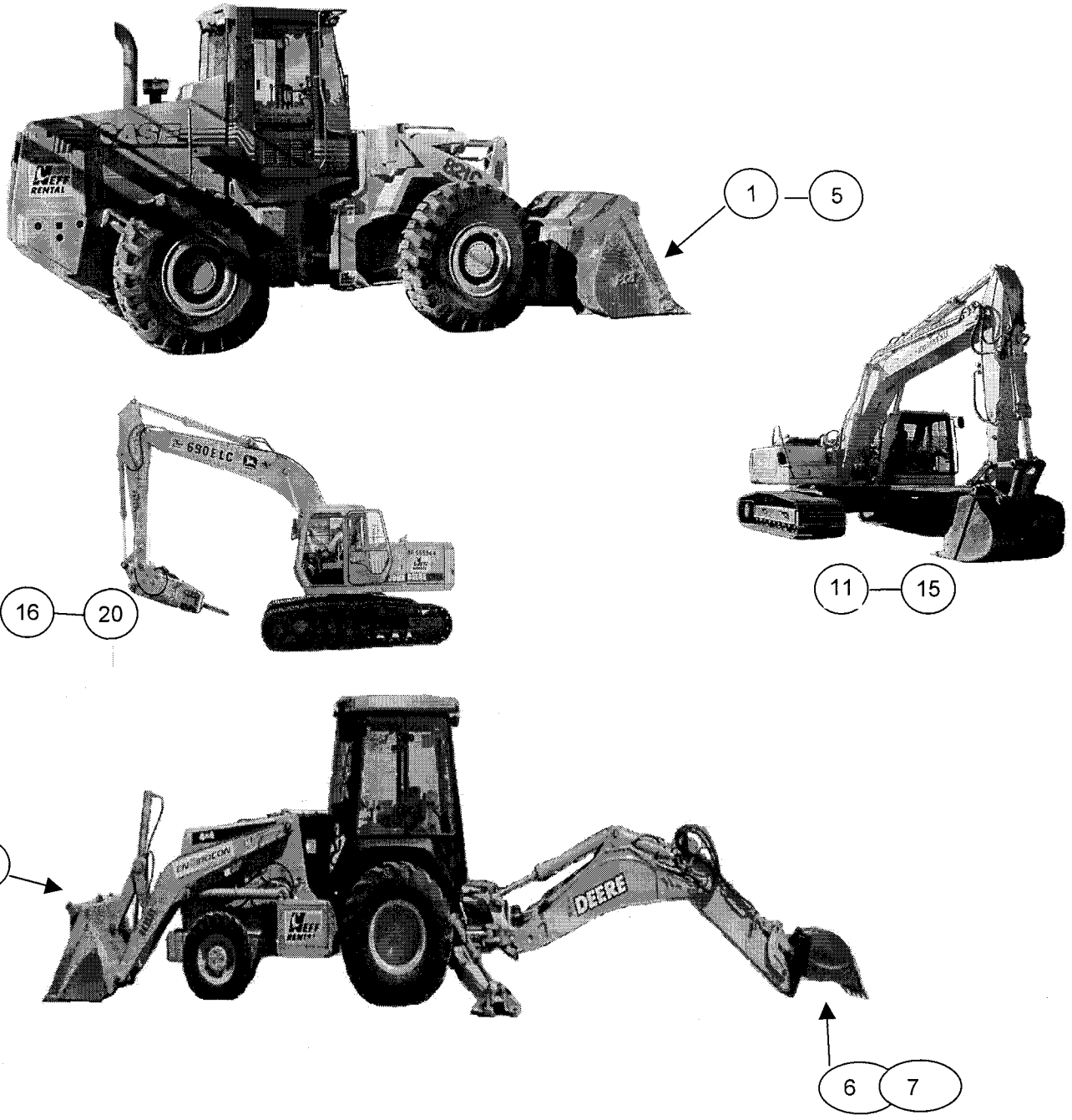

ROCKY FLATS ENVIRONMENTAL TECHNOLOGY SITE

INSTRUMENT DATA

Mfg.	Eberline	Mfg.	Eberline	Mfg.	NE Electra
Model	SAC-4	Model	BC-4	Model	DP-6
Serial #	824	Serial #	704	Serial #	1681
Cal Due	10/1/02	Cal Due	10/30/02	Cal Due	11/22/02
Bkg	0.2 cpmα	Bkg	32.6 cpmβ	Bkg	1 cpmα
Eff.	33 %	Eff.	25 %	Eff.	22.6 %
MDA	20 dpmα	MDA	200 dpmβ	MDA	33 dpmα

Mfg.	Eberline	Mfg.	Eberline	Mfg.	NE Electra
Model	SAC-4	Model	BC-4	Model	DP-6
Serial #	NA	Serial #	NA	Serial #	1681
Cal Due	NA	Cal Due	NA	Cal Due	11/22/02
Bkg	NA cpmα	Bkg	NA cpmβ	Bkg	351 cpmβ
Eff.	33 %	Eff.	25 %	Eff.	31.5 %
MDA	20 dpmα	MDA	200 dpmβ	MDA	285 dpmβ

Survey Type: radiation/ Contamination
Building: 788 pad
Location: Solar ponds
Purpose: daily

RWP #: 02-RISS-020

Date: 9/5/02 Time: 1700

[redacted]

RCT: NA / NA / NA
Print name Signature Emp. #

PRN/REN # : NA
Comments: NA

SURVEY RESULTS

Swipe #	LOCATION	ALPHA Swipe dpm/100cm2	ALPHA Direct dpm/100cm2	ALPHA Wipe dpm/wipe	BETA Swipe dpm/100cm2	BETA Direct dpm/100cm2	BETA Wipe dpm/wipe
1	Loader	<20	<33	NA	<200	<285	NA
2	Loader	<20	<33		<200	<285	
3	Loader	<20	<33		<200	<285	
4	Loader	<20	<33		<200	<285	
5	Loader	<20	<33		<200	<285	
6	Backhoe	<20	<33		<200	<285	
7	Backhoe	<20	<33		<200	<285	
8	Backhoe	<20	<33		<200	<285	
9	Backhoe	<20	<33		<200	<285	
10	Backhoe	<20	<33		<200	<285	
11	Excavator	<20	<33		<200	<285	
12	Excavator	<20	<33		<200	<285	
13	Excavator	<20	<33		<200	<285	
14	Excavator	<20	<33		<200	<285	
15	Excavator	<20	<33		<200	<285	
NA	NA						
NA	NA			NA			NA

Date Reviewed: 9-9-02 **RS Supervision:** J.W. Smith / James W. Smith / [redacted]
Print Name Signature

189

Drawing Showing Survey Points

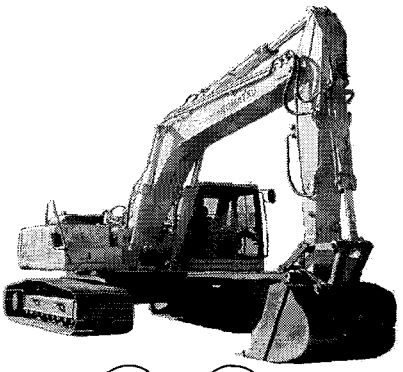

ROCKY FLATS ENVIRONMENTAL TECHNOLOGY SITE

INSTRUMENT DATA

Mfg.	Eberline	Mfg.	Eberline	Mfg.	NE Electra
Model	SAC-4	Model	BC-4	Model	DP-6
Serial #	824	Serial #	704	Serial #	1681
Cal Due	10/1/02	Cal Due	10/30/02	Cal Due	11/22/02
Bkg	0.2 cpmα	Bkg	30 cpmβ	Bkg	2 cpmα
Eff.	33 %	Eff.	25 %	Eff.	22.6 %
MDA	20 dpmα	MDA	200 dpmβ	MDA	41 dpmα

Mfg.	Eberline	Mfg.	Eberline	Mfg.	NE Electra
Model	SAC-4	Model	BC-4	Model	DP-6
Serial #	NA	Serial #	NA	Serial #	1681
Cal Due	NA	Cal Due	NA	Cal Due	11/22/02
Bkg	NA cpmα	Bkg	NA cpmβ	Bkg	445 cpmβ
Eff.	33 %	Eff.	25 %	Eff.	31.5 %
MDA	20 dpmα	MDA	200 dpmβ	MDA	320 dpmβ

Survey Type: radiation/ Contamination
Building: 788 pad
Location: Solar ponds
Purpose: daily

RWP #: 02-RISS-020

Date: 9/4/02 Time: 1700

[redacted]

RCT: NA / NA / NA
Print name Signature Emp. #

PRN/REN # : NA
Comments: NA

SURVEY RESULTS

Swipe #	LOCATION	ALPHA Swipe dpm/100cm2	ALPHA Direct dpm/100cm2	ALPHA Wipe dpm/wipe	BETA Swipe dpm/100cm2	BETA Direct dpm/100cm2	BETA Wipe dpm/wipe
1	Loader	<20	<41	NA	<200	<320	NA
2	Loader	<20	<41		<200	<320	
3	Loader	<20	<41		<200	<320	
4	Loader	<20	<41		<200	<320	
5	Loader	<20	<41		<200	<320	
6	Backhoe	<20	<41		<200	<320	
7	Backhoe	<20	<41		<200	<320	
8	Backhoe	<20	<41		<200	<320	
9	Backhoe	<20	<41		<200	<320	
10	Backhoe	<20	<41		<200	<320	
11	Excavator	<20	<41		<200	<320	
12	Excavator	<20	<41		<200	<320	
13	Excavator	<20	<41		<200	<320	
14	Excavator	<20	<41		<200	<320	
15	Excavator	<20	<41		<200	<320	
NA	NA						
NA	NA			NA			NA

Date Reviewed: 9-9-02 **RS Supervision:** J.W. Smith [redacted]
Print Name Signature

191

ROCKY FLATS ENVIRONMENTAL TECHNOLOGY SITE

Drawing Showing Survey Points

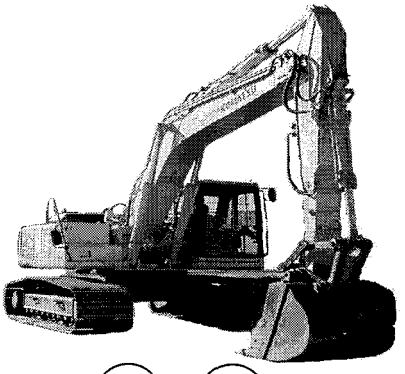

192

ROCKY FLATS ENVIRONMENTAL TECHNOLOGY SITE

INSTRUMENT DATA

Mfg.	Eberline	Mfg.	Eberline	Mfg.	NE Electra
Model	SAC-4	Model	BC-4	Model	DP-6
Serial #	824	Serial #	704	Serial #	1681
Cal Due	10/1/02	Cal Due	10/30/02	Cal Due	11/22/02
Bkg	0.2 cpmα	Bkg	32.9 cpmβ	Bkg	7 cpmα
Eff.	33 %	Eff.	25 %	Eff.	22.6 %
MDA	20 dpmα	MDA	200 dpmβ	MDA	66 dpmα
Mfg.	Eberline	Mfg.	Eberline	Mfg.	NE Electra
Model	SAC-4	Model	BC-4	Model	DP-6
Serial #	NA	Serial #	NA	Serial #	1681
Cal Due	NA	Cal Due	NA	Cal Due	11/22/02
Bkg	NA cpmα	Bkg	NA cpmβ	Bkg	425 cpmβ
Eff.	33 %	Eff.	25 %	Eff.	31.5 %
MDA	20 dpmα	MDA	200 dpmβ	MDA	313 dpmβ

Survey Type:

Building: 788 PAD

Location: Solar Ponds

Purpose: daily

RWP #: 02-RISS-020

Date: 9/3/02 Time: 1700

[redacted]

RCT: NA / NA / NA

Print name Signature Emp. #

PRN/REN # :

Comments:

SURVEY RESULTS

Swipe #	LOCATION	ALPHA Swipe dpm/100cm2	ALPHA Direct dpm/100cm2	ALPHA Wipe dpm/wipe	BETA Swipe dpm/100cm2	BETA Direct dpm/100cm2	BETA Wipe dpm/wipe
1	Loader	<20	<66	NA	<200	<313	NA
2	Loader	<20	<66	NA	<200	<313	NA
3	Loader	<20	<66	NA	<200	<313	NA
4	Loader	<20	<66	NA	<200	<313	NA
5	Loader	<20	<66	NA	<200	<313	NA
6	Backhoe	<20	<66	NA	<200	<313	NA
7	Backhoe	<20	<66	NA	<200	<313	NA
8	Backhoe	<20	<66	NA	<200	<313	NA
9	Backhoe	<20	<66	NA	<200	<313	NA
10	Backhoe	<20	<66	NA	<200	<313	NA
11	Concrete saw	<20	<66	NA	<200	<313	NA
12	Concrete saw	<20	<66	NA	<200	<313	NA
13	Concrete saw	<20	<66	NA	<200	<313	NA
14	Concrete saw	<20	<66	NA	<200	<313	NA
15	Concrete saw	<20	<66	NA	<200	<313	NA
16	Excavator	<20	<66	NA	<200	<313	NA
17	Excavator	<20	<66	NA	<200	<313	NA
18	Excavator	<20	<66	NA	<200	<313	NA
19	Excavator	<20	<66	NA	<200	<313	NA
20	Excavator	<20	<66	NA	<200	<313	NA

Date Reviewed: 9-9-02 **RS Supervision:** J.W. Smith / James W. Smith / [redacted]

Print Name Signature

193

ROCKY FLATS ENVIRONMENTAL TECHNOLOGY SITE

Drawing Showing Survey Points

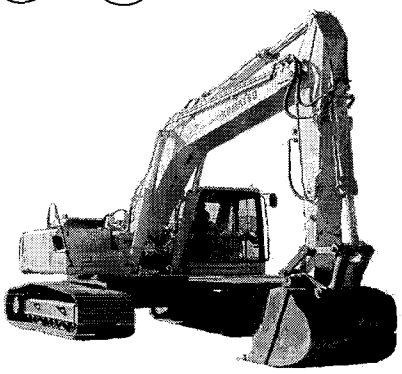

16-20

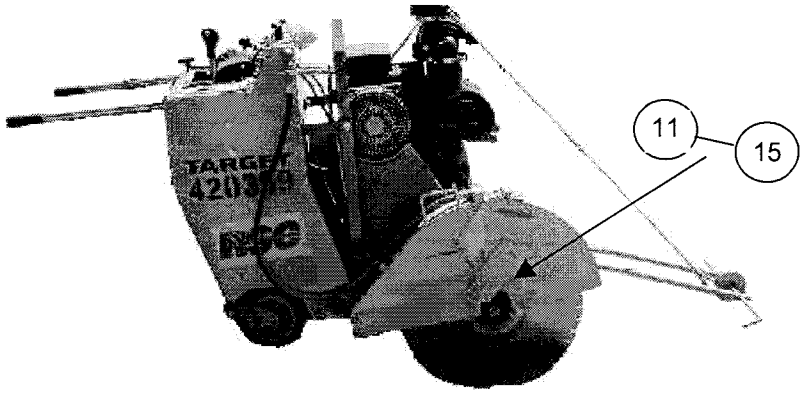

194

ROCKY FLATS ENVIRONMENTAL TECHNOLOGY SITE

INSTRUMENT DATA

Mfg.	Eberline	Mfg.	NE Electra	Mfg.	NE Electra
Model	SAC-4	Model	DP-6	Model	DP-6
Serial #	959	Serial #	2394	Serial #	1681
Cal Due	1/18/03	Cal Due	3/5/03	Cal Due	11/22/02
Bkg	0.2 cpmα	Bkg	1 cpmβ	Bkg	6 cpmα
Eff.	33 %	Eff.	22.1 %	Eff.	21.5 %
MDA	20 dpmα	MDA	33 dpmβ	MDA	66 dpmα

Mfg.	Eberline	Mfg.	NE Electra	Mfg.	NE Electra
Model	BC-4	Model	DP-6	Model	DP-6
Serial #	702	Serial #	2394	Serial #	1681
Cal Due	7/22/03	Cal Due	3/5/03	Cal Due	11/22/02
Bkg	32.7 cpmα	Bkg	317 cpmβ	Bkg	351 cpmβ
Eff.	25 %	Eff.	30.2 %	Eff.	32.4 %
MDA	200 dpmα	MDA	283 dpmβ	MDA	277 dpmβ

Survey Type: contamination/ radiation
Building: 788
Location: Solar ponds
Purpose: daily

RWP #: 02-RISS-020

Date: 10/22/02 Time: 1500

[redacted]

PRN/REN # : NA
Comments: NA

SURVEY RESULTS

Swipe #	LOCATION	ALPHA Swipe dpm/100cm2	ALPHA Direct dpm/100cm2	ALPHA Wipe dpm/wipe	BETA Swipe dpm/100cm2	BETA Direct dpm/100cm2	BETA Wipe dpm/wipe
1	backhoe	<20	<66	NA	<200	<283	NA
2	backhoe	<20	<66		<200	<283	
3	backhoe	<20	<66		<200	<283	
4	backhoe	<20	<66		<200	<283	
5	backhoe	<20	<66		<200	<283	
6	grader	<20	<66		<200	<283	
7	grader	<20	<66		<200	<283	
8	grader	<20	<66		<200	<283	
9	grader	<20	<66		<200	<283	
10	grader	<20	<66		<200	<283	
11	excavator	<20	<66		<200	<283	
12	excavator	<20	<66		<200	<283	
13	excavator	<20	<66		<200	<283	
14	excavator	<20	<66		<200	<283	
15	excavator	<20	<66		<200	<283	
16	loader	<20	<66		<200	<283	
17	loader	<20	<66		<200	<283	
18	loader	<20	<66		<200	<283	
19	loader	<20	<66		<200	<283	
20	loader	<20	<66	NA	<200	<283	NA

Date Reviewed: 11-2-02 **RS Supervision:** [redacted]
Print Name Signature

195

Drawing Showing Survey Points

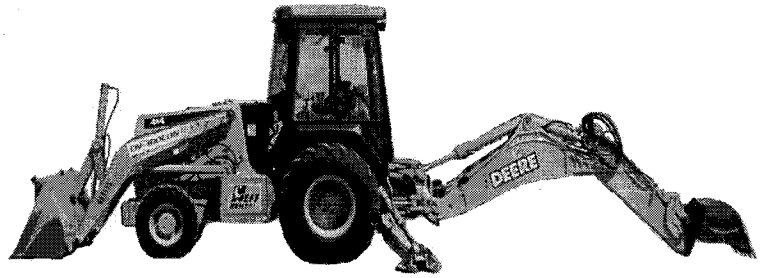

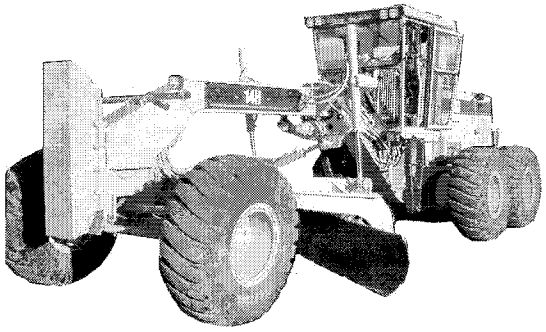

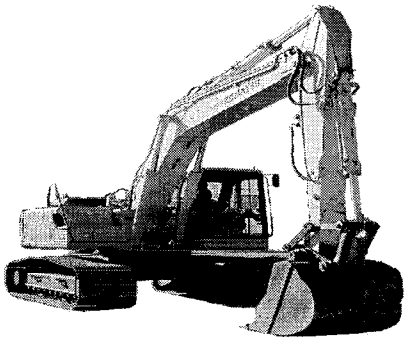

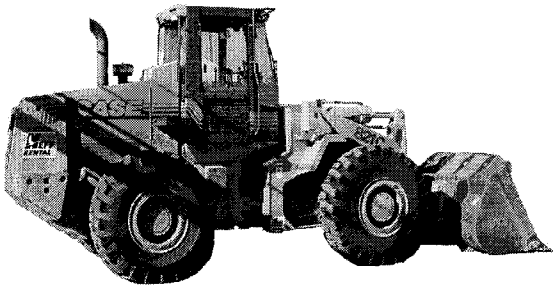

196

ROCKY FLATS ENVIRONMENTAL TECHNOLOGY SITE

INSTRUMENT DATA

Mfg.	Eberline	Mfg.	Eberline	Mfg.	NE Electra
Model	SAC-4	Model	BC-4	Model	DP-6
Serial #	959	Serial #	835	Serial #	NA
Cal Due	1/18/02	Cal Due	9/17/02	Cal Due	
Bkg	0.2 cpmα	Bkg	33.8 cpmβ	Bkg	cpmα
Eff.	33 %	Eff.	25 %	Eff.	%
MDA	20 dpmα	MDA	200 dpmβ	MDA	NA dpmα

Mfg.	Eberline	Mfg.	Eberline	Mfg.	NE Electra
Model	SAC-4	Model	BC-4	Model	DP-6
Serial #	NA	Serial #	NA	Serial #	NA
Cal Due		Cal Due		Cal Due	
Bkg	cpmα	Bkg	cpmβ	Bkg	cpmβ
Eff.	%	Eff.	%	Eff.	%
MDA	NA dpmα	MDA	NA dpmβ	MDA	NA dpmβ

Survey Type: Contamination
Building: 788
Location: access cargo
Purpose: weekly

RWP #: 02-RISS-020

Date: 10/22/02 Time: 1500

[redacted]

RCT:	NA	NA	NA
	Print name	Signature	Emp. #

PRN/REN # : NA
Comments:

SURVEY RESULTS

Swipe #	LOCATION	ALPHA Swipe dpm/100cm2	ALPHA Direct dpm/100cm2	ALPHA Wipe dpm/wipe	BETA Swipe dpm/100cm2	BETA Direct dpm/100cm2	BETA Wipe dpm/wipe
1	floor	< 20	NA	NA	< 200	NA	NA
2	waste container	< 20			< 200		
3	table	< 20			< 200		
4	shelf	< 20			< 200		
5	floor	< 20			< 200		
6	floor	< 20			< 200		
7	shelf	< 20			< 200		
8	waste container	< 20			< 200		
9	floor	< 20			< 200		
10	floor	< 20			< 200		
NA	NA	NA			NA		
NA	NA	NA	NA	NA	NA	NA	NA

Date Reviewed: 11-2-02 **RS Supervision:** [redacted]
Print Name Signature

197

ROCKY FLATS ENVIRONMENTAL TECHNOLOGY SITE

Drawing Showing Survey Points

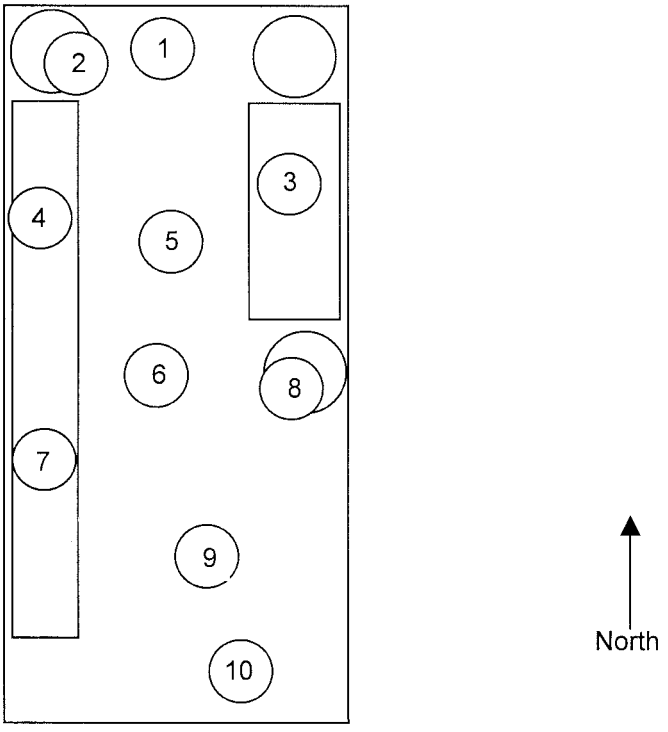

198

ROCKY FLATS ENVIRONMENTAL TECHNOLOGY SITE

INSTRUMENT DATA

Mfg.	Eberline	Mfg.	Eberline	Mfg.	NE Electra
Model	SAC-4	Model	BC-4	Model	DP-6
Serial #	959	Serial #	702	Serial #	1681
Cal Due	1/18/03	Cal Due	7/22/02	Cal Due	11/22/02
Bkg	0.1 cpmα	Bkg	31.2 cpmβ	Bkg	4 cpmα
Eff.	33 %	Eff.	25 %	Eff.	21.5 %
MDA	20 dpmα	MDA	200 dpmβ	MDA	56 dpmα
Mfg.	Eberline	Mfg.	Eberline	Mfg.	NE Electra
Model	SAC-4	Model	BC-4	Model	DP-6
Serial #	NA	Serial #	NA	Serial #	1681
Cal Due	NA	Cal Due	NA	Cal Due	11/22/02
Bkg	NA cpmα	Bkg	NA cpmβ	Bkg	342 cpmβ
Eff.	33 %	Eff.	25 %	Eff.	32.4 %
MDA	20 dpmα	MDA	200 dpmβ	MDA	274 dpmβ

Survey Type:
Building: 788
Location: Solar ponds
Purpose: daily

RWP #: 02-RISS-020

Date: 10/21/02 Time: 1500

[redacted]

RCT: NA / NA / NA
Print name Signature Emp. #

PRN/REN # : NA
Comments: NA

SURVEY RESULTS

Swipe #	LOCATION	ALPHA Swipe dpm/100cm2	ALPHA Direct dpm/100cm2	ALPHA Wipe dpm/wipe	BETA Swipe dpm/100cm2	BETA Direct dpm/100cm2	BETA Wipe dpm/wipe
1	Backhoe	<20	<56	NA	<200	<274	NA
2	Backhoe	<20	<56		<200	<274	
3	Backhoe	<20	<56		<200	<274	
4	Backhoe	<20	<56		<200	<274	
5	Backhoe	<20	<56		<200	<274	
6	Loader	<20	<56		<200	<274	
7	Loader	<20	<56		<200	<274	
8	Loader	<20	<56		<200	<274	
9	Loader	<20	<56		<200	<274	
10	Loader	<20	<56		<200	<274	
11	Excavator	<20	<56		<200	<274	
12	Excavator	<20	<56		<200	<274	
13	Excavator	<20	<56		<200	<274	
14	Excavator	<20	<56		<200	<274	
15	Excavator	<20	<56		<200	<274	
NA	NA	NA	NA		NA	NA	
NA	NA	NA	NA	NA	NA	NA	NA

Date Reviewed: 11-2-02 **RS Supervision:** Stephanos / [redacted]
Print Name Signature

199

Drawing Showing Survey Points

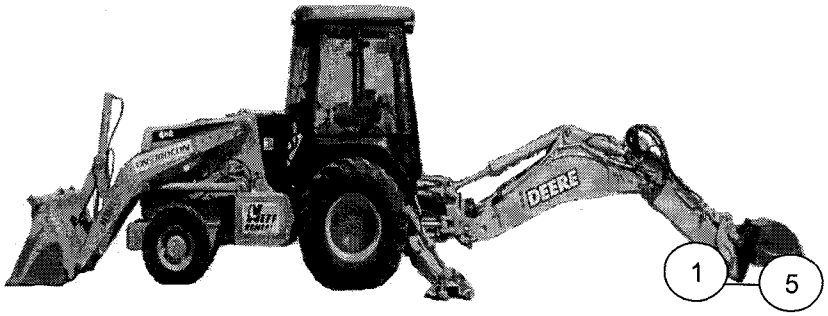

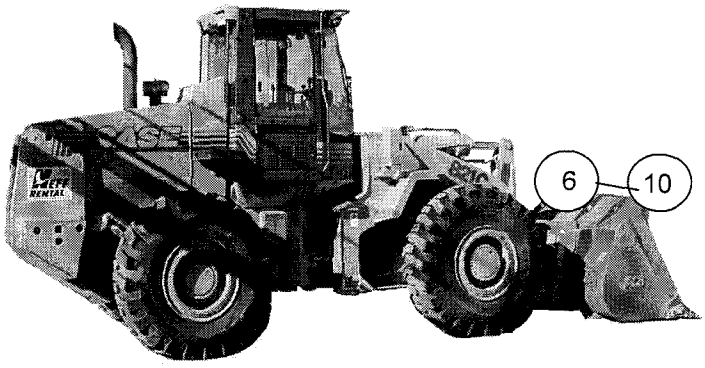

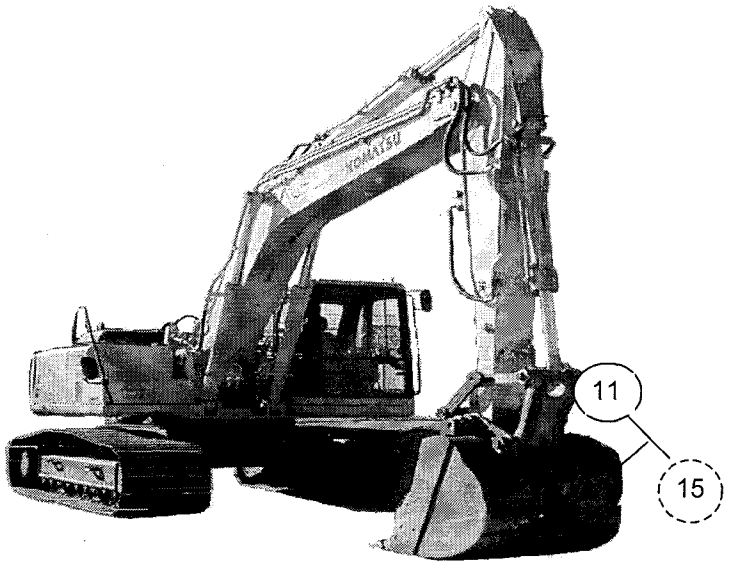

200

ROCKY FLATS ENVIRONMENTAL TECHNOLOGY SITE

INSTRUMENT DATA

Mfg.	Eberline	Mfg.	NE	Mfg.	NA
Model	SAC 4	Model	Electra	Model	NA
Serial #	959	Serial #	1681	Serial #	NA
Cal Due	1/18/03	Cal Due	11/22/02	Cal Due	NA
Bkg	0.1 cpmα	Bkg	4 cpmα	Bkg	NA cpmα
Efficiency	33.00 %	Efficiency	21.50 %	Efficiency	NA %
MDA	20 dpmα	MDA	56 dpmα	MDA	NA dpmα
Mfg.	Eberline	Mfg.	NE	Mfg.	NA
Model	BC 4	Model	Electra	Model	NA
Serial #	702	Serial #	1681	Serial #	NA
Cal Due	7/22/03	Cal Due	11/22/02	Cal Due	NA
Bkg	31.2 cpmβ	Bkg	342 cpmβ	Bkg	NA cpmβ
Efficiency	25.00 %	Efficiency	32.40 %	Efficiency	NA %
MDA	200 dpmβ	MDA	274 dpmβ	MDA	NA dpmβ

Survey Type: Contamination
Building: Solar ponds
Location: 788
Purpose: incoming

RWP #: 02-RISS-020

Date: 10/21/02 Time: 12:00

R [redacted]

RCT: NA / NA / NA
Print name Signature Emp. #

PRN/REN # : NA
Comments: NA

SURVEY RESULTS

Swipe #	Location / Description Results in DPM/100sq.cm	Removable Alpha	Removable Beta	Total Alpha	Total Beta
1	grader	< 20	< 200	<56	<274
2	grader	< 20	< 200	<56	<274
3	grader	< 20	< 200	<56	<274
4	grader	< 20	< 200	<56	<274
5	grader	< 20	< 200	<56	<274
6	grader	< 20	< 200	<56	<274
7	grader	< 20	< 200	<56	<274
8	grader	< 20	< 200	<56	<274
9	grader	< 20	< 200	<56	<274
10	grader	< 20	< 200	<56	<274
11	grader	< 20	< 200	<56	<274
12	grader	< 20	< 200	<56	<274
13	grader	< 20	< 200	<56	<274
14	grader	< 20	< 200	<56	<274
15	grader	< 20	< 200	<56	<274
16	grader	< 20	< 200	<56	<274
17	grader	< 20	< 200	<56	<274
18	grader	< 20	< 200	<56	<274
19	grader	< 20	< 200	<56	<274
20	grader	< 20	< 200	<56	<274
21	grader	< 20	< 200	<56	<274
22	grader	< 20	< 200	<56	<274
23	grader	< 20	< 200	<56	<274
24	grader	< 20	< 200	<56	<274
25	grader	< 20	< 200	<56	<274

MAP

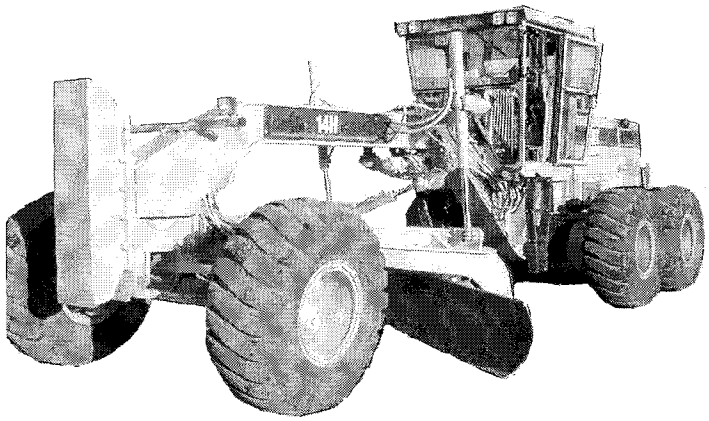

Date Reviewed: 11302 **RS Supervision:** Steve Gernatt / [signature] / [redacted]
Print Name Signature

201

ROCKY FLATS ENVIRONMENTAL TECHNOLOGY SITE

INSTRUMENT DATA

Mfg.	Eberline	Mfg.	NE	Mfg.	NA
Model	SAC 4	Model	Electra	Model	NA
Serial #	959	Serial #	1681	Serial #	NA
Cal Due	1/18/03	Cal Due	11/22/02	Cal Due	NA
Bkg	0.1 cpmα	Bkg	4 cpmα	Bkg	NA cpmα
Efficiency	33.00 %	Efficiency	21.50 %	Efficiency	NA %
MDA	20 dpmα	MDA	56 dpmα	MDA	NA dpmα
Mfg.	Eberline	Mfg.	NE	Mfg.	NA
Model	BC 4	Model	Electra	Model	NA
Serial #	702	Serial #	1681	Serial #	NA
Cal Due	7/22/03	Cal Due	11/22/02	Cal Due	NA
Bkg	31.2 cpmβ	Bkg	342 cpmβ	Bkg	NA cpmβ
Efficiency	25.00 %	Efficiency	32.40 %	Efficiency	NA %
MDA	200 dpmβ	MDA	274 dpmβ	MDA	NA dpmβ

Survey Type: Contamination
Building: Solar Ponds
Location: Equipment
Purpose: Incoming

RWP #: 02-RISS-020

Date: 10/21/02 Time: 15:00:00 PM

[redacted]

RCT: NA / NA / NA
Print name / Signature / Emp. #

PRN/REN # : NA
Comments: NA

SURVEY RESULTS

Swipe #	Location / Description Results in DPM/100sq.cm	Removable Alpha	Removable Beta	Total Alpha	Total Beta
1	Tracks	< 20	< 200	<56	<274
2	Tracks	< 20	< 200	<56	<274
3	Tracks	< 20	< 200	<56	<274
4	Tracks	< 20	< 200	<56	<274
5	Tracks	< 20	< 200	<56	<274
6	Tracks	< 20	< 200	<56	<274
7	Tracks	< 20	< 200	<56	<274
8	Blade	< 20	< 200	<56	<274
9	Blade	< 20	< 200	<56	<274
10	Blade	< 20	< 200	<56	<274
11	Blade	< 20	< 200	<56	<274
12	Blade	< 20	< 200	<56	<274
13	Dozer	< 20	< 200	<56	<274
14	Dozer	< 20	< 200	<56	<274
15	Dozer	< 20	< 200	<56	<274
16	Dozer	< 20	< 200	<56	<274
17	Dozer	< 20	< 200	<56	<274
18	Dozer	< 20	< 200	<56	<274
19	Dozer	< 20	< 200	<56	<274
20	Cab	< 20	< 200	<56	<274
21	Cab	< 20	< 200	<56	<274
22	Cab	< 20	< 200	<56	<274
23	Cab	< 20	< 200	<56	<274
24	Cab	< 20	< 200	<56	<274
25	Cab	< 20	< 200	<56	<274

MAP

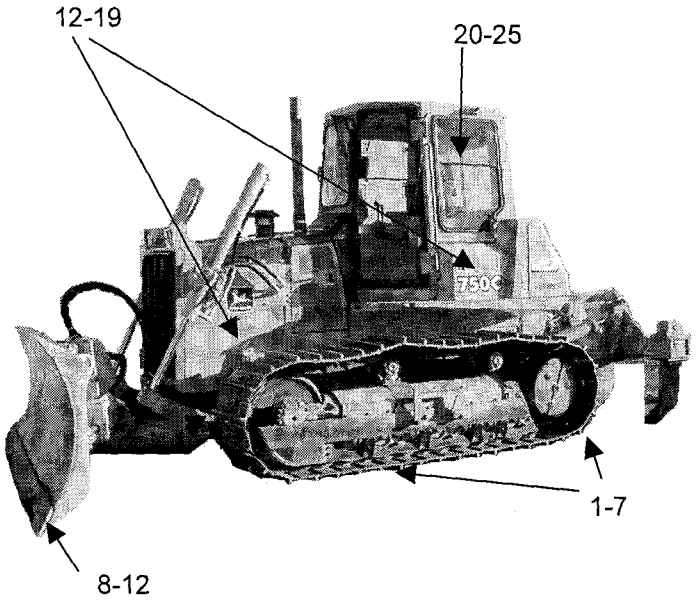

Date Reviewed: 11-20-02 **RS Supervision:** Steve Gernatt
Print Name / Signature

[redacted]

207

ROCKY FLATS ENVIRONMENTAL TECHNOLOGY SITE

INSTRUMENT DATA

Mfg.	Eberline	Mfg.	Eberline	Mfg.	NE Electra
Model	SAC-4	Model	BC-4	Model	DP-6
Serial #	959	Serial #	911	Serial #	NA
Cal Due	1/18/02	Cal Due	10/30/02	Cal Due	
Bkg	0 cpmα	Bkg	33.2 cpmβ	Bkg	cpmα
Eff.	33 %	Eff.	25 %	Eff.	%
MDA	20 dpmα	MDA	200 dpmβ	MDA	NA dpmα

Mfg.	Eberline	Mfg.	Eberline	Mfg.	NE Electra
Model	SAC-4	Model	BC-4	Model	DP-6
Serial #	NA	Serial #	NA	Serial #	NA
Cal Due		Cal Due		Cal Due	
Bkg	cpmα	Bkg	cpmβ	Bkg	cpmβ
Eff.	%	Eff.	%	Eff.	%
MDA	NA dpmα	MDA	NA dpmβ	MDA	NA dpmβ

Survey Type: Contamination
Building: 788
Location: general area
Purpose: daily

RWP #: 02-RISS-020

Date: 10/17/02 Time: 1615

[redacted]

PRN/REN # : NA
Comments:

SURVEY RESULTS

Swipe #	LOCATION	ALPHA Swipe dpm/100cm2	ALPHA Direct dpm/100cm2	ALPHA Wipe dpm/wipe	BETA Swipe dpm/100cm2	BETA Direct dpm/100cm2	BETA Wipe dpm/wipe
1	loader	< 20	NA	NA	< 200	NA	NA
2	loader	< 20	NA	NA	< 200	NA	NA
3	loader	< 20	NA	NA	< 200	NA	NA
4	loader	< 20	NA	NA	< 200	NA	NA
5	loader	< 20	NA	NA	< 200	NA	NA
6	trackhoe	< 20	NA	NA	< 200	NA	NA
7	trackhoe	< 20	NA	NA	< 200	NA	NA
8	trackhoe	< 20	NA	NA	< 200	NA	NA
9	trackhoe	< 20	NA	NA	< 200	NA	NA
10	trackhoe	< 20	NA	NA	< 200	NA	NA
11	backhoe	< 20	NA	NA	< 200	NA	NA
12	backhoe	< 20	NA	NA	< 200	NA	NA
13	backhoe	< 20	NA	NA	< 200	NA	NA
14	backhoe	< 20	NA	NA	< 200	NA	NA
15	backhoe	< 20	NA	NA	< 200	NA	NA
NA	NA	NA	NA	NA	NA	NA	NA
NA	NA	NA	NA	NA	NA	NA	NA
NA	NA	NA	NA	NA	NA	NA	NA
NA	NA	NA	NA	NA	NA	NA	NA
NA	NA	NA	NA	NA	NA	NA	NA

Date Reviewed: 11-30-2 **RS Supervision:** [redacted]
Print Name Signature

203

ROCKY FLATS ENVIRONMENTAL TECHNOLOGY SITE

Drawing Showing Survey Points

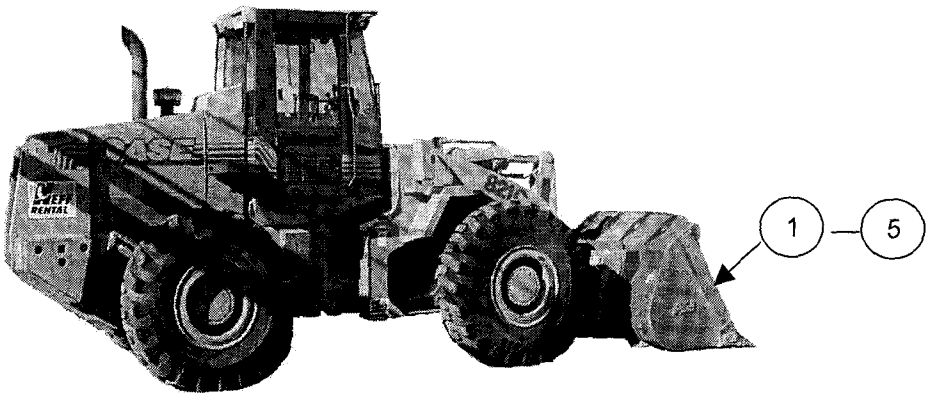

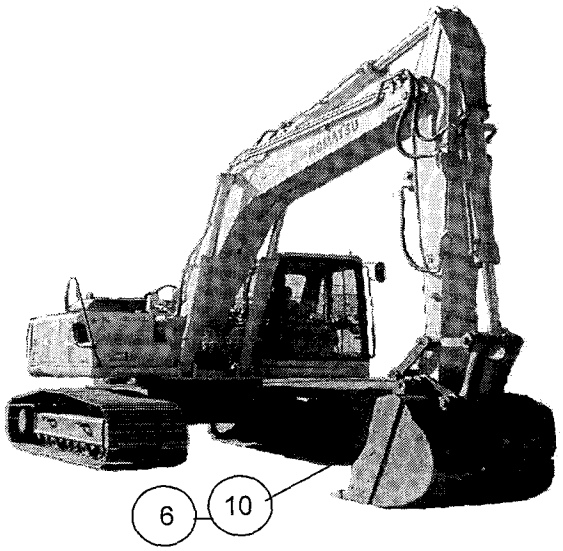

204

ROCKY FLATS ENVIRONMENTAL TECHNOLOGY SITE

INSTRUMENT DATA

Mfg.	Ludlum	Mfg.	Ludlum	Mfg.	NE Electra	**Survey type:**	Contamination	
Model	2929	Model	2929	Model	DP-6	Building:	Solar Ponds	
Serial #	99057	Serial #	109534	Serial #	3113	Location:	Between 'A'& 'B' Ponds	
Cal Due	3/12/03	Cal Due	3/30/03	Cal Due	3/24/03	Purpose:	SCO	
Bkg.	0.1 cpm α	Bkg.	0.1 cpm α	Bkg.	1 cpm α			
Efficiency	34.8 %	Efficiency	34.5 %	Efficiency	21.9 %	RWP #:	02-RISS-020	
MDA	18 dpm α	MDA	18 dpm α	MDA	34 dpm α			
						Date:	10/17/02	Time: 1300
Mfg.	Ludlum	Mfg.	Ludlum	Mfg.	NE Electra	[redacted]		
Model	2929	Model	2929	Model	DP-6			
Serial #	99057	Serial #	109534	Serial #	3113			
Cal Due	3/12/03	Cal Due	3/30/03	Cal Due	3/24/03			
Bkg.	67.2 cpm β	Bkg.	75.4 cpm β	Bkg.	328 cpm β	RCT:	N/A	/ NA / NA
Efficiency	38.8 %	Efficiency	38.8 %	Efficiency	30.1 %		Print name	Signature Emp. #
MDA	205 dpm α	MDA	205 dpm α	MDA	289 dpm β			

PRN/REN # : NA

Comments: 10 1-minute pat surveys, 15 swipes

SURVEY RESULTS

Swipe #	LOCATION/DESCRIPTION	ALPHA			BETA		
		Swipe	Direct	Wipe	Swipe	Direct	Wipe
		dpm/100cm2	dpm/100cm2	dpm/wipe	dpm/100cm2	dpm/100cm2	dpm/wipe
1	Rebar	<18	<34	NA	<205	<289	NA
2	Rebar	<18	<34		<205	<289	
3	Rebar	<18	<34		<205	<289	
4	Rebar	<18	<34		<205	<289	
5	Rebar	<18	<34		<205	<289	
6	Rebar	<18	<34		<205	<289	
7	Rebar	<18	<34		<205	<289	
8	Rebar	<18	<34		<205	<289	
9	Rebar	<18	<34		<205	<289	
10	Rebar	<18	<34		<205	<289	
11	Rebar	<18	<34		<205	<289	
12	Rebar	<18	<34		<205	<289	
13	Rebar	<18	<34		<205	<289	
14	Rebar	<18	<34		<205	<289	
15	Rebar	<18	<34		<205	<289	
NA	NA	NA	NA		NA	NA	
NA	NA	NA	NA	NA	NA	NA	NA

Date Reviewed: 10-20-02 **RS Supervision:** [redacted]

Print Name Signature

206

ROCKY FLATS ENVIRONMENTAL TECHNOLOGY SITE

INSTRUMENT DATA

Mfg.	Eberline	Mfg.	Eberline	Mfg.	NE Electra
Model	SAC-4	Model	BC-4	Model	DP-6
Serial #	959	Serial #	835	Serial #	NA
Cal Due	1/18/02	Cal Due	9/17/02	Cal Due	
Bkg	0 cpmα	Bkg	34.5 cpmβ	Bkg	cpmα
Eff.	33 %	Eff.	25 %	Eff.	%
MDA	20 dpmα	MDA	200 dpmβ	MDA	NA dpmα

Mfg.	Eberline	Mfg.	Eberline	Mfg.	NE Electra
Model	SAC-4	Model	BC-4	Model	DP-6
Serial #	NA	Serial #	NA	Serial #	NA
Cal Due		Cal Due		Cal Due	
Bkg	cpmα	Bkg	cpmβ	Bkg	cpmβ
Eff.	%	Eff.	%	Eff.	%
MDA	NA dpmα	MDA	NA dpmβ	MDA	NA dpmβ

Survey Type: Contamination
Building: 788
Location: access cargo
Purpose: weekly

RWP #: 02-RISS-020

Date: 10/17/02 Time: 1400

[redacted]

RCT: NA NA NA
Print name Signature Emp. #

PRN/REN # : NA
Comments:

SURVEY RESULTS

Swipe #	LOCATION	ALPHA Swipe dpm/100cm2	ALPHA Direct dpm/100cm2	ALPHA Wipe dpm/wipe	BETA Swipe dpm/100cm2	BETA Direct dpm/100cm2	BETA Wipe dpm/wipe
1	shelf	< 20	NA	NA	< 200	NA	NA
2	shelf	< 20			< 200		
3	waste container	< 20			< 200		
4	table	< 20			< 200		
5	waste container	< 20			< 200		
6	floor	< 20			< 200		
7	floor	< 20			< 200		
8	floor	< 20			< 200		
9	floor	< 20			< 200		
10	floor	< 20			< 200		
NA	NA	NA			NA		
NA	NA	NA	NA	NA	NA	NA	NA

Date Reviewed: 11 20 02 **RS Supervision:** [redacted]
Print Name Signature

206

ROCKY FLATS ENVIRONMENTAL TECHNOLOGY SITE

Drawing Showing Survey Points

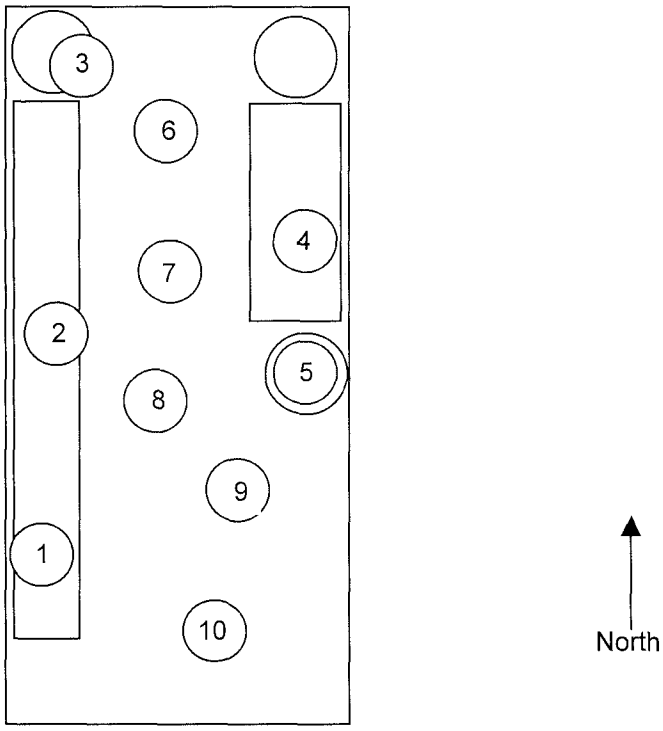

207

ROCKY FLATS ENVIRONMENTAL TECHNOLOGY SITE

INSTRUMENT DATA

Mfg.	Eberline	Mfg.	Eberline	Mfg.	NE Electra
Model	SAC-4	Model	BC-4	Model	DP-6
Serial #	959	Serial #	835	Serial #	2394
Cal Due	1/18/03	Cal Due	9/17/03	Cal Due	3/5/03
Bkg	0 cpmα	Bkg	35.4 cpmβ	Bkg	1 cpmα
Eff.	33 %	Eff.	25 %	Eff.	22.1 %
MDA	20 dpmα	MDA	200 dpmβ	MDA	33 dpmα
Mfg.	Eberline	Mfg.	Eberline	Mfg.	NE Electra
Model	SAC-4	Model	BC-4	Model	DP-6
Serial #	NA	Serial #	NA	Serial #	2394
Cal Due	NA	Cal Due	NA	Cal Due	3/5/03
Bkg	NA cpmα	Bkg	NA cpmβ	Bkg	323 cpmβ
Eff.	33 %	Eff.	25 %	Eff.	30.2 %
MDA	20 dpmα	MDA	200 dpmβ	MDA	286 dpmβ

Survey Type:

Building: 788

Location: Solar ponds

Purpose: daily

RWP #: 02-RISS-020

Date: 10/16/02 Time: 1500

R [redacted]

R

PRN/REN # : NA

Comments: NA

SURVEY RESULTS

Swipe #	LOCATION	ALPHA Swipe dpm/100cm2	ALPHA Direct dpm/100cm2	ALPHA Wipe dpm/wipe	BETA Swipe dpm/100cm2	BETA Direct dpm/100cm2	BETA Wipe dpm/wipe
1	Backhoe	<20	<33	NA	<200	<286	NA
2	Backhoe	<20	<33		<200	<286	
3	Backhoe	<20	<33		<200	<286	
4	Backhoe	<20	<33		<200	<286	
5	Backhoe	<20	<33		<200	<286	
6	Loader	<20	<33		<200	<286	
7	Loader	<20	<33		<200	<286	
8	Loader	<20	<33		<200	<286	
9	Loader	<20	<33		<200	<286	
10	Loader	<20	<33		<200	<286	
11	Excavator	<20	<33		<200	<286	
12	Excavator	<20	<33		<200	<286	
13	Excavator	<20	<33		<200	<286	
14	Excavator	<20	<33		<200	<286	
15	Excavator	<20	<33		<200	<286	
NA	NA	NA	NA		NA	NA	
NA	NA	NA	NA	NA	NA	NA	NA

Date Reviewed: 11202 **RS Supervision:** [redacted]

Print Name Signature

208

ROCKY FLATS ENVIRONMENTAL TECHNOLOGY SITE

Drawing Showing Survey Points

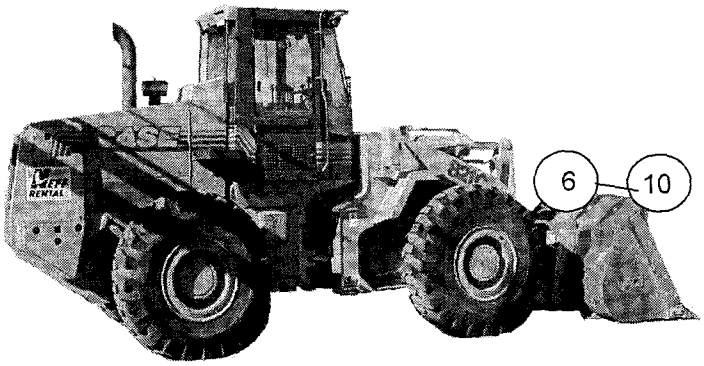

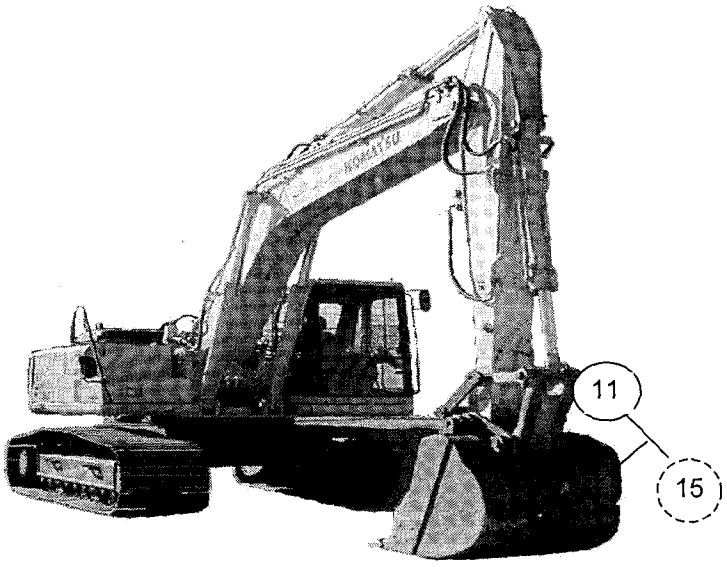

204

ROCKY FLATS ENVIRONMENTAL TECHNOLOGY SITE

INSTRUMENT DATA

Mfg.	Eberline	Mfg.	Eberline	Mfg.	NE Electra
Model	SAC-4	Model	BC-4	Model	DP-6
Serial #	959	Serial #	835	Serial #	1681
Cal Due	1/18/03	Cal Due	9/17/03	Cal Due	11/22/02
Bkg	0.2 cpmα	Bkg	36.1 cpmβ	Bkg	8 cpmα
Eff.	33 %	Eff.	25 %	Eff.	21.5 %
MDA	20 dpmα	MDA	200 dpmβ	MDA	74 dpmα
Mfg.	Eberline	Mfg.	Eberline	Mfg.	NE Electra
Model	SAC-4	Model	BC-4	Model	DP-6
Serial #	NA	Serial #	NA	Serial #	1681
Cal Due	NA	Cal Due	NA	Cal Due	11/22/02
Bkg	NA cpmα	Bkg	NA cpmβ	Bkg	371 cpmβ
Eff.	33 %	Eff.	25 %	Eff.	32.4 %
MDA	20 dpmα	MDA	200 dpmβ	MDA	285 dpmβ

Survey Type:

Building: 788

Location: Solar ponds

Purpose: daily

RWP #: 02-RISS-020

Date: 10/15/02 Time: 1500

RCT: NA / NA / NA

[redacted]

PRN/REN # : NA

Comments: NA

SURVEY RESULTS

Swipe #	LOCATION	ALPHA Swipe dpm/100cm2	ALPHA Direct dpm/100cm2	ALPHA Wipe dpm/wipe	BETA Swipe dpm/100cm2	BETA Direct dpm/100cm2	BETA Wipe dpm/wipe
1	Backhoe	<20	<74	NA	<200	<285	NA
2	Backhoe	<20	<74		<200	<285	
3	Backhoe	<20	<74		<200	<285	
4	Backhoe	<20	<74		<200	<285	
5	Backhoe	<20	<74		<200	<285	
6	Loader	<20	<74		<200	<285	
7	Loader	<20	<74		<200	<285	
8	Loader	<20	<74		<200	<285	
9	Loader	<20	<74		<200	<285	
10	Loader	<20	<74		<200	<285	
11	Excavator	<20	<74		<200	<285	
12	Excavator	<20	<74		<200	<285	
13	Excavator	<20	<74		<200	<285	
14	Excavator	<20	<74		<200	<285	
15	Excavator	<20	<74		<200	<285	
NA	NA	NA	NA		NA	NA	
NA	NA	NA	NA	NA	NA	NA	NA

Date Reviewed: 11-2-02 **RS Supervision:** [redacted]

Print Name / Signature

210

Drawing Showing Survey Points

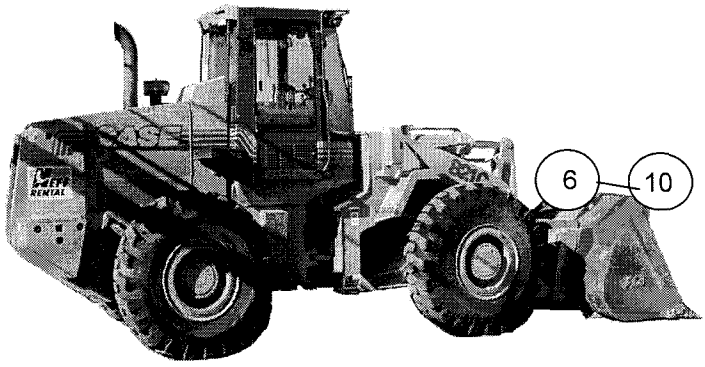

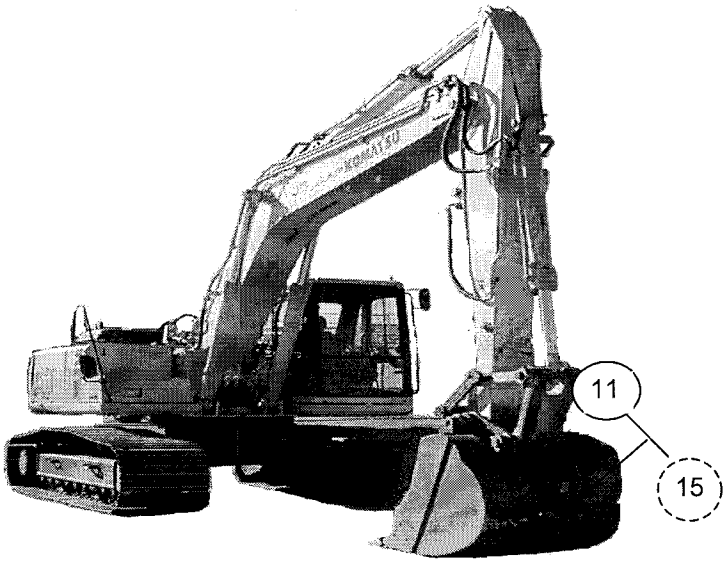

211

ROCKY FLATS ENVIRONMENTAL TECHNOLOGY SITE

INSTRUMENT DATA

Mfg.	Eberline	Mfg.	Eberline	Mfg.	NE Electra
Model	SAC-4	Model	BC-4	Model	DP-6
Serial #	959	Serial #	835	Serial #	1681
Cal Due	1/18/03	Cal Due	9/17/03	Cal Due	11/22/02
Bkg	0.2 cpmα	Bkg	36.1 cpmβ	Bkg	6 cpmα
Eff.	33 %	Eff.	25 %	Eff.	21.5 %
MDA	20 dpmα	MDA	200 dpmβ	MDA	66 dpmα

Mfg.	Eberline	Mfg.	Eberline	Mfg.	NE Electra
Model	SAC-4	Model	BC-4	Model	DP-6
Serial #	NA	Serial #	NA	Serial #	1681
Cal Due	NA	Cal Due	NA	Cal Due	11/22/02
Bkg	NA cpmα	Bkg	NA cpmβ	Bkg	390 cpmβ
Eff.	33 %	Eff.	25 %	Eff.	32.4 %
MDA	20 dpmα	MDA	200 dpmβ	MDA	292 dpmβ

Survey Type:

Building: 788

Location: Solar ponds

Purpose: daily

RWP #: 02-RISS-020

Date: 10/14/02 Time: 1500

RCT: NA / NA / NA

Print name Signature Emp. #

[redacted]

PRN/REN # : NA

Comments: NA

SURVEY RESULTS

Swipe #	LOCATION	ALPHA Swipe dpm/100cm2	ALPHA Direct dpm/100cm2	ALPHA Wipe dpm/wipe	BETA Swipe dpm/100cm2	BETA Direct dpm/100cm2	BETA Wipe dpm/wipe
1	Backhoe	<20	<66	NA	<200	<292	NA
2	Backhoe	<20	<66		<200	<292	
3	Backhoe	<20	<66		<200	<292	
4	Backhoe	<20	<66		<200	<292	
5	Backhoe	<20	<66		<200	<292	
6	Loader	<20	<66		<200	<292	
7	Loader	<20	<66		<200	<292	
8	Loader	<20	<66		<200	<292	
9	Loader	<20	<66		<200	<292	
10	Loader	<20	<66		<200	<292	
11	Excavator	<20	<66		<200	<292	
12	Excavator	<20	<66		<200	<292	
13	Excavator	<20	<66		<200	<292	
14	Excavator	<20	<66		<200	<292	
15	Excavator	<20	<66		<200	<292	
NA	NA	NA	NA		NA	NA	
NA	NA	NA	NA	NA	NA	NA	NA

Date Reviewed: 11-1-02 **RS Supervision:** [redacted]

Print Name Signature

2/2

Drawing Showing Survey Points

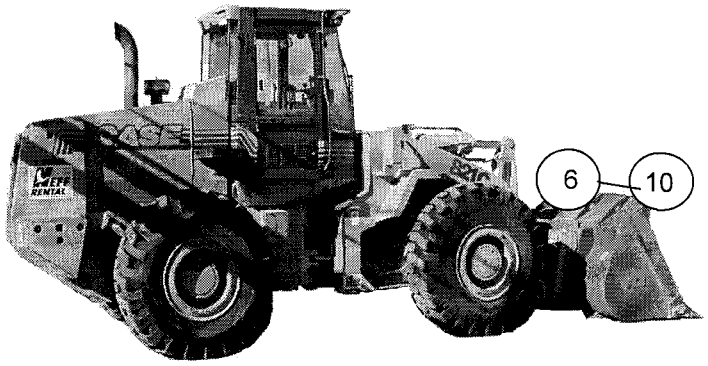

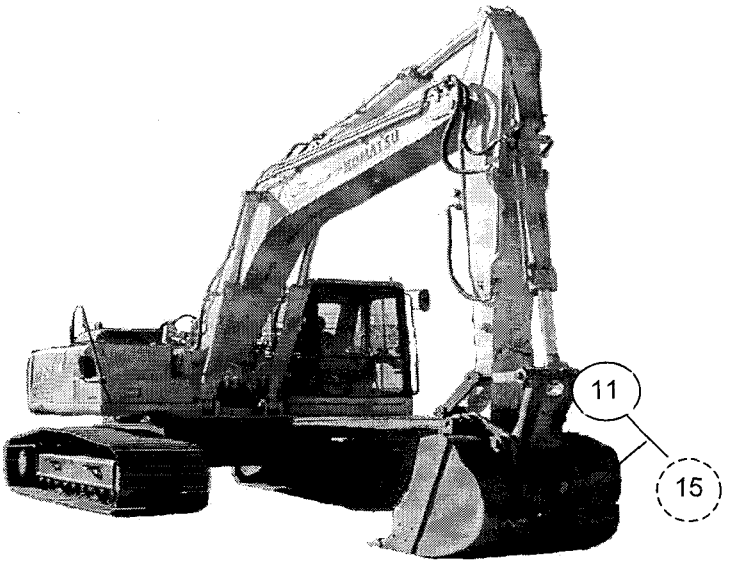

ROCKY FLATS ENVIRONMENTAL TECHNOLOGY SITE

INSTRUMENT DATA

Mfg.	Eberline	Mfg.	Eberline	Mfg.	NE Electra
Model	Sac-4	Model	Sac-4	Model	DP-6
Serial #	959	Serial #	966	Serial #	3113
Cal Due	1/18/03	Cal Due	11/6/02	Cal Due	3/24/03
Bkg	0.2 cpmα	Bkg	0.2 cpmα	Bkg	2 cpmα
Efficiency	33.00 %	Efficiency	33.00 %	Efficiency	21.90 %
MDA	<20 dpmα	MDA	<20 dpmα	MDA	<94 dpmα

Mfg.	Eberline	Mfg.	Eberline	Mfg.	NE Electra
Model	BC-4	Model	BC-4	Model	DP-6
Serial #	702	Serial #	835	Serial #	3113
Cal Due	7/22/03	Cal Due	9/17/03	Cal Due	3/24/03
Bkg	31.7 cpmβ	Bkg	36.1 cpmβ	Bkg	322 cpmβ
Efficiency	25.00 %	Efficiency	25.00 %	Efficiency	30.10 %
MDA	<200 dpmβ	MDA	<200 dpmβ	MDA	<455 dpmβ

Survey Type: Contamination
Building: Solar Ponds
Location: Access road (Asphalt)
Purpose: Release

RWP #: 02-RISS-020

Date: 10/11/02 Time: 1000

[redacted]

RCT: N/A / N/A / NA/
Print name Signature Emp. #

PRN/REN # :
Comments: Asphalt road has been tore up and piled for removal pending survey results

SURVEY RESULTS

Swipe #	Location / Description Results in DPM/100sq.cm	Removable Alpha	Removable Beta	Total Alpha	Total Beta
1	Road Asphalt Rubble	<20	<200	30	636
2	Road Asphalt Rubble	<20	<200	48	840
3	Road Asphalt Rubble	<20	<200	30	1020
4	Road Asphalt Rubble	<20	<200	35	969
5	Road Asphalt Rubble	<20	<200	30	627
6	Road Asphalt Rubble	<20	<200	35	300
7	Road Asphalt Rubble	<20	<200	36	930
8	Road Asphalt Rubble	<20	<200	42	930
9	Road Asphalt Rubble	<20	<200	30	768
10	Road Asphalt Rubble	<20	<200	30	636
11	Road Asphalt Rubble	<20	<200	6	963
12	Road Asphalt Rubble	<20	<200	36	639
13	Road Asphalt Rubble	<20	<200	18	627
14	Road Asphalt Rubble	<20	<200	12	900
15	Road Asphalt Rubble	<20	<200	24	933
16	Road Asphalt Rubble	<20	<200	36	366
17	Road Asphalt Rubble	<20	<200	30	951
18	Road Asphalt Rubble	<20	<200	42	1086
19	Road Asphalt Rubble	<20	<200	18	843
20	Road Asphalt Rubble	<20	<200	36	807
21	Asphalt slab under Conex	<20	<200	42	819
22	Asphalt slab under Conex	<20	<200	48	1005
23	Asphalt slab under Conex	<20	<200	30	729
24	Asphalt slab under Conex	<20	<200	36	957
25	Asphalt slab under Conex	<20	<200	24	1086
26	Asphalt slab under Conex	<20	<200	12	870
27	Asphalt slab under Conex	<20	<200	24	855
28	Asphalt slab under Conex	<20	<200	36	930
29	Asphalt slab under Conex	<20	<200	30	600
30	Asphalt slab under Conex	<20	<200	42	99
31	Asphalt slab under Conex	<20	<200	18	969
N/A	N/A	N/A	N/A	N/A	N/A
N/A	N/A	N/A	N/A	N/A	N/A

Date Reviewed: 10-14-02 **RS Supervision:** Steve Gernatt / [signature] / [redacted]
Print Name Signature

214

ROCKY FLATS ENVIRONMENTAL TECHNOLOGY SITE

INSTRUMENT DATA

Mfg.	Eberline	Mfg.	Eberline	Mfg.	NE Electra
Model	SAC-4	Model	BC-4	Model	DP-6
Serial #	959	Serial #	911	Serial #	NA
Cal Due	1/18/02	Cal Due	10/30/02	Cal Due	
Bkg	0.2 cpmα	Bkg	35.1 cpmβ	Bkg	cpmα
Eff.	33 %	Eff.	25 %	Eff.	%
MDA	20 dpmα	MDA	200 dpmβ	MDA	NA dpmα

Mfg.	Eberline	Mfg.	Eberline	Mfg.	NE Electra
Model	SAC-4	Model	BC-4	Model	DP-6
Serial #	NA	Serial #	NA	Serial #	NA
Cal Due		Cal Due		Cal Due	
Bkg	cpmα	Bkg	cpmβ	Bkg	cpmβ
Eff.	%	Eff.	%	Eff.	%
MDA	NA dpmα	MDA	NA dpmβ	MDA	NA dpmβ

Survey Type: Contamination
Building: 788
Location: general area
Purpose: daily

RWP #: 02-RISS-020

Date: 10/11/02 Time: 1600

[redacted]

PRN/REN # : NA
Comments:

SURVEY RESULTS

Swipe #	LOCATION	ALPHA Swipe dpm/100cm2	ALPHA Direct dpm/100cm2	ALPHA Wipe dpm/wipe	BETA Swipe dpm/100cm2	BETA Direct dpm/100cm2	BETA Wipe dpm/wipe
1	loader	< 20	NA	NA	< 200	NA	NA
2	loader	< 20	NA	NA	< 200	NA	NA
3	loader	< 20	NA	NA	< 200	NA	NA
4	loader	< 20	NA	NA	< 200	NA	NA
5	loader	< 20	NA	NA	< 200	NA	NA
6	trackhoe	< 20	NA	NA	< 200	NA	NA
7	trackhoe	< 20	NA	NA	< 200	NA	NA
8	trackhoe	< 20	NA	NA	< 200	NA	NA
9	trackhoe	< 20	NA	NA	< 200	NA	NA
10	trackhoe	< 20	NA	NA	< 200	NA	NA
11	backhoe	< 20	NA	NA	< 200	NA	NA
12	backhoe	< 20	NA	NA	< 200	NA	NA
13	backhoe	< 20	NA	NA	< 200	NA	NA
14	backhoe	< 20	NA	NA	< 200	NA	NA
15	backhoe	< 20	NA	NA	< 200	NA	NA
NA	NA	NA	NA	NA	NA	NA	NA
NA	NA	NA	NA	NA	NA	NA	NA
NA	NA	NA	NA	NA	NA	NA	NA
NA	NA	NA	NA	NA	NA	NA	NA
NA	NA	NA	NA	NA	NA	NA	NA

Date Reviewed: 11202 **RS Supervision:** Sloan / [redacted]
Print Name Signature

Drawing Showing Survey Points

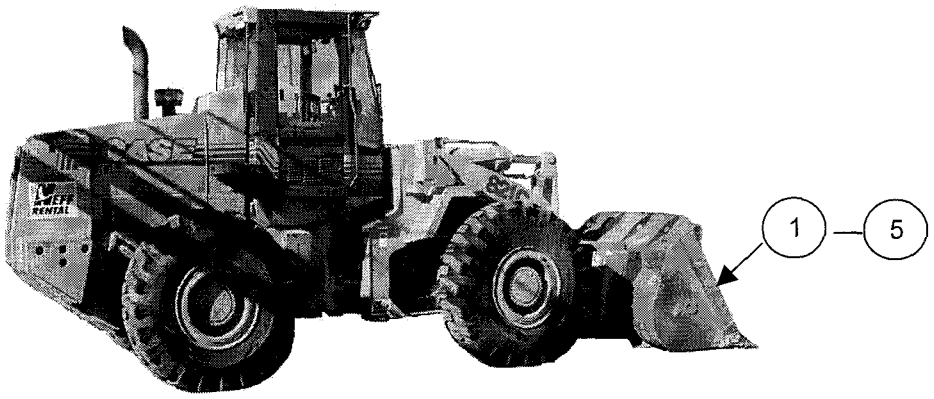

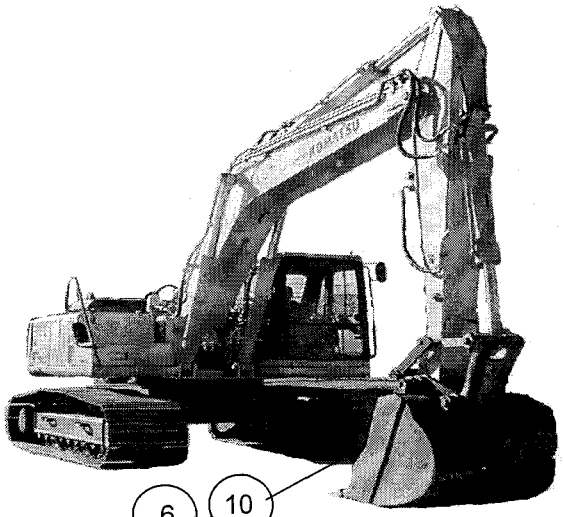

ROCKY FLATS ENVIRONMENTAL TECHNOLOGY SITE

INSTRUMENT DATA

Mfg.	Eberline	Mfg.	Eberline	Mfg.	NE Electra
Model	SAC-4	Model	BC-4	Model	DP-6
Serial #	959	Serial #	835	Serial #	2394
Cal Due	1/18/03	Cal Due	9/17/03	Cal Due	3/5/03
Bkg	0.2 cpmα	Bkg	34.1 cpmβ	Bkg	3 cpmα
Eff.	33 %	Eff.	25 %	Eff.	22.1 %
MDA	20 dpmα	MDA	200 dpmβ	MDA	49 dpmα

Mfg.	Eberline	Mfg.	Eberline	Mfg.	NE Electra
Model	SAC-4	Model	BC-4	Model	DP-6
Serial #	NA	Serial #	NA	Serial #	2394
Cal Due		Cal Due		Cal Due	3/5/03
Bkg	cpmα	Bkg	cpmβ	Bkg	449 cpmβ
Eff.	%	Eff.	%	Eff.	30.2 %
MDA	NA dpmα	MDA	NA dpmβ	MDA	335 dpmβ

Survey Type: Contamination

Building: 788

Location: South west corner of C solar pond

Purpose: Line removal from 207 tank.

RWP #: 02-RISS-20

Date: 10/10/02 Time: 1000

[redacted]

PRN/REN # : NA

Comments: Survey performed on the waste line coming from the 207 tank. Cuts performed inside a glove bag after the initial tap and drain.

SURVEY RESULTS

		ALPHA			BETA		
Swipe	LOCATION	Swipe	Direct	Wipe	Swipe	Direct	Wipe
#	see map	dpm/100cm2	dpm/100cm2	dpm/wipe	dpm/100cm2	dpm/100cm2	dpm/wipe
1	pipe	337	NA	NA	591	NA	NA
2	pipe	287	NA	NA	269	NA	NA
3	pipe	123	NA	NA	465	NA	NA
4	pipe	22	NA	NA	40	NA	NA
5	pipe	18	NA	NA	73	NA	NA
6	pipe	27	NA	NA	93	NA	NA
7	vent pipe	319	NA	NA	1162	NA	NA
NA	NA	NA	NA	NA	NA	NA	NA
NA	NA	NA	NA	NA	NA	NA	NA
NA	NA	NA	NA	NA	NA	NA	NA
NA	NA	NA	NA	NA	NA	NA	NA
NA	NA	NA	NA	NA	NA	NA	NA
NA	NA	NA	NA	NA	NA	NA	NA
NA	NA	NA	NA	NA	NA	NA	NA
NA	NA	NA	NA	NA	NA	NA	NA
NA	NA	NA	NA	NA	NA	NA	NA
NA	NA	NA	NA	NA	NA	NA	NA
NA	NA	NA	NA	NA	NA	NA	NA
NA	NA	NA	NA	NA	NA	NA	NA
NA	NA	NA	NA	NA	NA	NA	NA

Date Reviewed: 10-17-02 **RS Supervision:** S Gerrath / [signature]

Print Name Signature

[redacted]

3-PRO-RSP-07.01 (effictive 7/12/01)

217

ROCKY FLATS ENVIRONMENTAL TECHNOLOGY SITE

Drawing Showing Survey Points

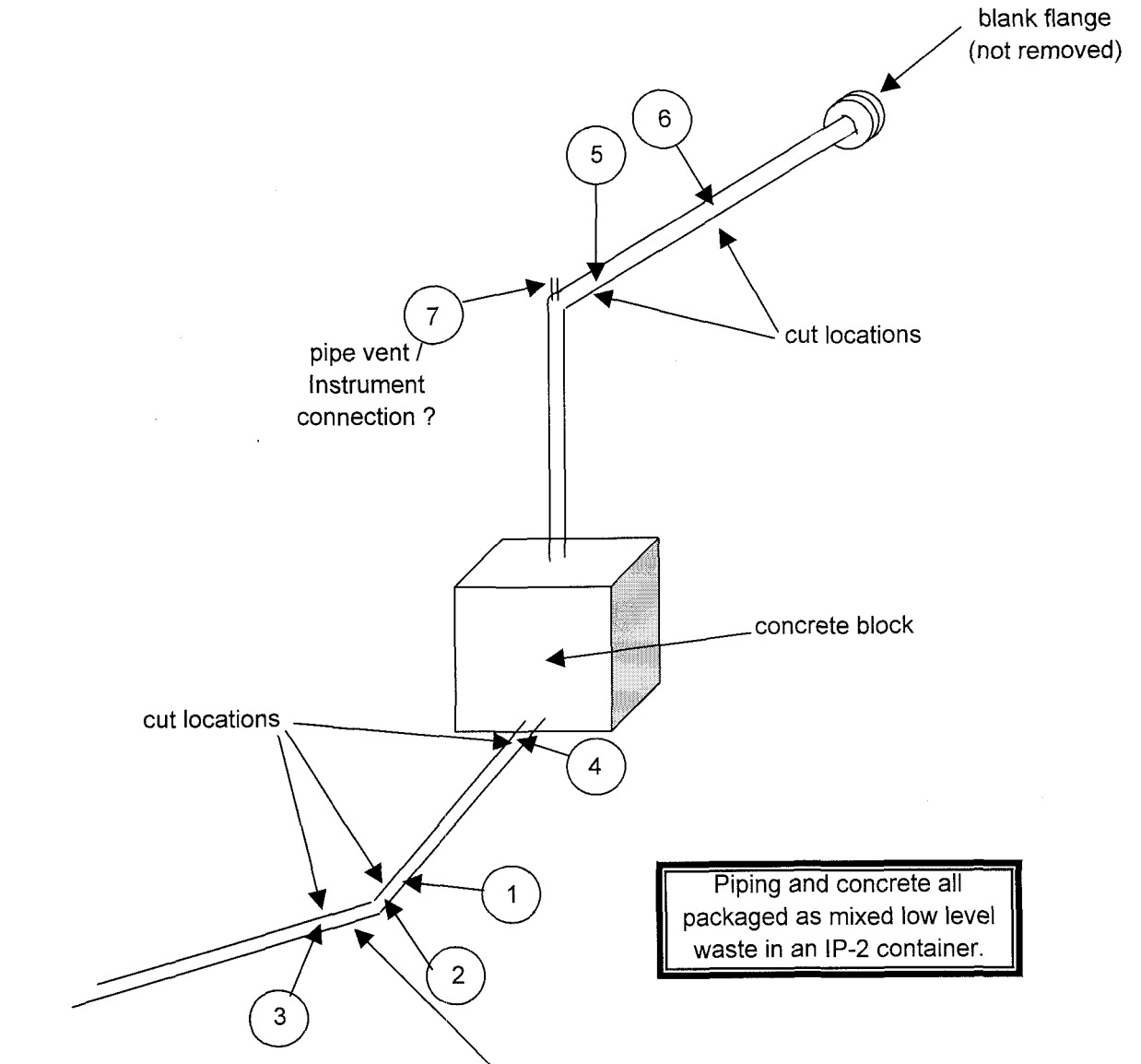

218

ROCKY FLATS ENVIRONMENTAL TECHNOLOGY SITE

INSTRUMENT DATA

Mfg.	Eberline	Mfg.	Eberline	Mfg.	NE Electra
Model	SAC-4	Model	BC-4	Model	DP-6
Serial #	959	Serial #	835	Serial #	1681
Cal Due	1/18/03	Cal Due	9/17/03	Cal Due	11/22/02
Bkg	0.2 cpmα	Bkg	34.1 cpmβ	Bkg	4 cpmα
Eff.	33 %	Eff.	25 %	Eff.	21.5 %
MDA	20 dpmα	MDA	200 dpmβ	MDA	56 dpmα

Mfg.	Eberline	Mfg.	Eberline	Mfg.	NE Electra
Model	SAC-4	Model	BC-4	Model	DP-6
Serial #	NA	Serial #	NA	Serial #	1681
Cal Due	NA	Cal Due	NA	Cal Due	11/22/02
Bkg	NA cpmα	Bkg	NA cpmβ	Bkg	426 cpmβ
Eff.	33 %	Eff.	25 %	Eff.	32.4 %
MDA	20 dpmα	MDA	200 dpmβ	MDA	305 dpmβ

Survey Type:
Building: 788
Location: Solar ponds
Purpose: Check after soil removal.

RWP #: 02-RISS-020

Date: 10/10/02 Time: 1500

[redacted]

RCT: NA / NA / NA
Print name Signature Emp. #

PRN/REN # : NA
Comments: N.E. Bkg. Taken in field, after removing soil.

SURVEY RESULTS

Swipe #	LOCATION	ALPHA Swipe dpm/100cm2	ALPHA Direct dpm/100cm2	ALPHA Wipe dpm/wipe	BETA Swipe dpm/100cm2	BETA Direct dpm/100cm2	BETA Wipe dpm/wipe
1	Excavator	<20	<56	NA	<200	<305	NA
2	Excavator	<20	<56		<200	<305	
3	Excavator	<20	<56		<200	<305	
4	Excavator	<20	<56		<200	<305	
5	Excavator	<20	<56		<200	<305	
NA	NA	NA	NA		NA	NA	
NA	NA	NA	NA	NA	NA	NA	NA

Date Reviewed: 10-13-02 **RS Supervision:** [redacted]
Print Name Signature

219

Drawing Showing Survey Points

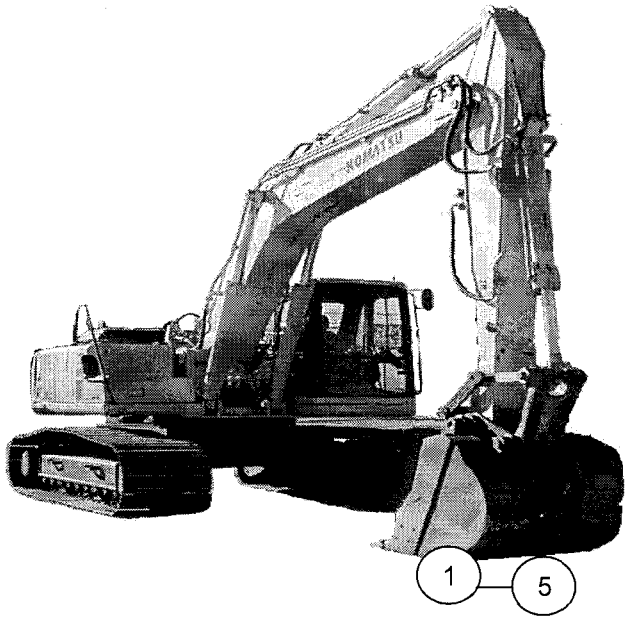

220

ROCKY FLATS ENVIRONMENTAL TECHNOLOGY SITE

INSTRUMENT DATA

Mfg.	Eberline	Mfg.	Eberline	Mfg.	NE Electra
Model	SAC-4	Model	BC-4	Model	DP-6
Serial #	959	Serial #	835	Serial #	1681
Cal Due	1/18/03	Cal Due	9/17/03	Cal Due	11/22/02
Bkg	0.2 cpmα	Bkg	34.1 cpmβ	Bkg	4 cpmα
Eff.	33 %	Eff.	25 %	Eff.	21.5 %
MDA	20 dpmα	MDA	200 dpmβ	MDA	56 dpmα

Mfg.	Eberline	Mfg.	Eberline	Mfg.	NE Electra
Model	SAC-4	Model	BC-4	Model	DP-6
Serial #	NA	Serial #	NA	Serial #	1681
Cal Due	NA	Cal Due	NA	Cal Due	11/22/02
Bkg	NA cpmα	Bkg	NA cpmβ	Bkg	426 cpmβ
Eff.	33 %	Eff.	25 %	Eff.	32.4 %
MDA	20 dpmα	MDA	200 dpmβ	MDA	305 dpmβ

Survey Type:
Building: 788
Location: Solar ponds
Purpose: daily

RWP #: 02-RISS-020

Date: 10/10/02 Time: 1500

[redacted]

PRN/REN # : NA
Comments: N.E. Bkg. Taken in field, after removing soil.

SURVEY RESULTS

Swipe #	LOCATION	ALPHA Swipe dpm/100cm2	ALPHA Direct dpm/100cm2	ALPHA Wipe dpm/wipe	BETA Swipe dpm/100cm2	BETA Direct dpm/100cm2	BETA Wipe dpm/wipe
1	Backhoe	<20	<56	NA	<200	<305	NA
2	Backhoe	<20	<56		<200	<305	
3	Backhoe	<20	<56		<200	<305	
4	Backhoe	<20	<56		<200	<305	
5	Backhoe	<20	<56		<200	<305	
6	Loader	<20	<56		<200	<305	
7	Loader	<20	<56		<200	<305	
8	Loader	<20	<56		<200	<305	
9	Loader	<20	<56		<200	<305	
10	Loader	<20	<56		<200	<305	
11	Excavator	<20	<56		<200	<305	
12	Excavator	<20	<56		<200	<305	
13	Excavator	<20	<56		<200	<305	
14	Excavator	<20	<56		<200	<305	
15	Excavator	<20	<56		<200	<305	
NA	NA	NA	NA		NA	NA	
NA	NA	NA	NA	NA	NA	NA	NA

Date Reviewed: 10-30-02 **RS Supervision:** [redacted]
Print Name Signature

221

Drawing Showing Survey Points

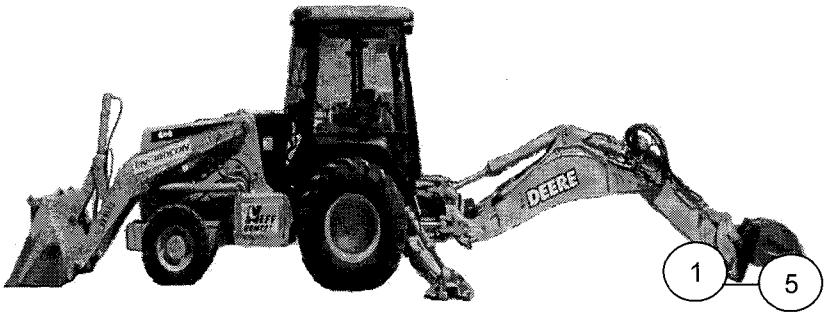

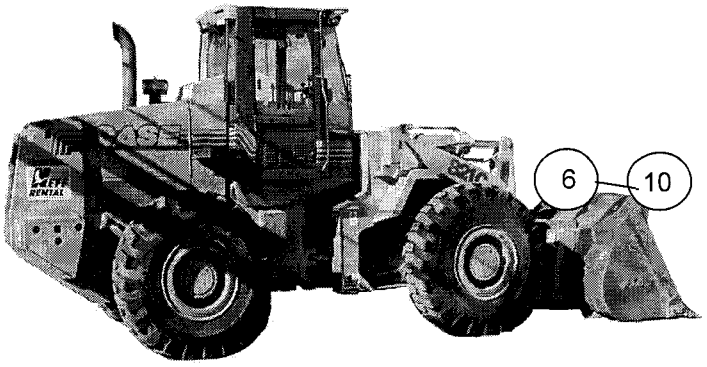

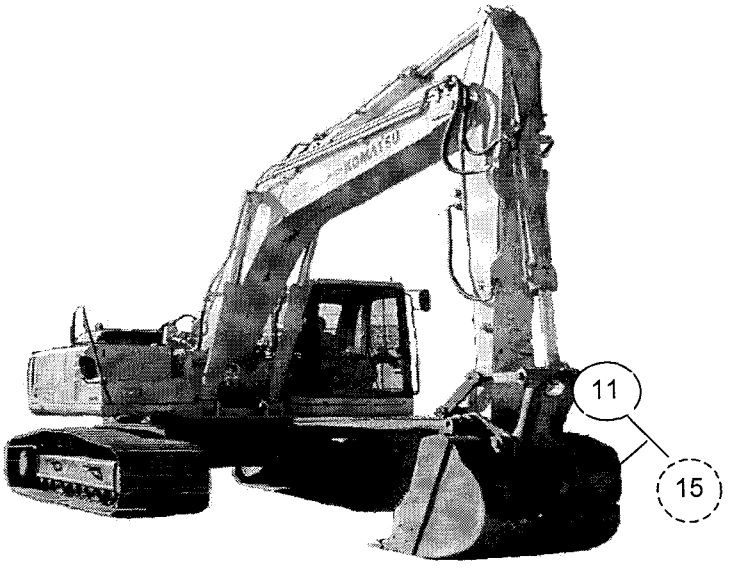

ROCKY FLATS ENVIRONMENTAL TECHNOLOGY SITE

INSTRUMENT DATA

Mfg.	Eberline	Mfg.	Eberline	Mfg.	NE Electra
Model	SAC-4	Model	BC-4	Model	DP-6
Serial #	959	Serial #	835	Serial #	NA
Cal Due	1/18/02	Cal Due	9/17/02	Cal Due	
Bkg	0.2 cpmα	Bkg	34.1 cpmβ	Bkg	cpmα
Eff.	33 %	Eff.	25 %	Eff.	%
MDA	20 dpmα	MDA	200 dpmβ	MDA	NA dpmα

Mfg.	Eberline	Mfg.	Eberline	Mfg.	NE Electra
Model	SAC-4	Model	BC-4	Model	DP-6
Serial #	NA	Serial #	NA	Serial #	NA
Cal Due		Cal Due		Cal Due	
Bkg	cpmα	Bkg	cpmβ	Bkg	cpmβ
Eff.	%	Eff.	%	Eff.	%
MDA	NA dpmα	MDA	NA dpmβ	MDA	NA dpmβ

Survey Type: Contamination

Building: 788

Location: access cargo

Purpose: weekly

RWP #: 02-RISS-020

Date: 10/10/02 Time: 1600

[redacted]

RCT:	NA	NA	NA
	Print name	Signature	Emp. #

PRN/REN # : NA

Comments:

SURVEY RESULTS

Swipe #	LOCATION	ALPHA Swipe dpm/100cm2	ALPHA Direct dpm/100cm2	ALPHA Wipe dpm/wipe	BETA Swipe dpm/100cm2	BETA Direct dpm/100cm2	BETA Wipe dpm/wipe
1	floor	< 20	NA	NA	< 200	NA	NA
2	floor	< 20			< 200		
3	floor	< 20			< 200		
4	floor	< 20			< 200		
5	floor	< 20			< 200		
6	floor	< 20			< 200		
7	shelf	< 20			< 200		
8	shelf	< 20			< 200		
9	table	< 20			< 200		
10	table	< 20			< 200		
NA	NA	NA			NA		
NA	NA	NA	NA	NA	NA	NA	NA

Date Reviewed: 11-2-02 **RS Supervision:** [signature] / [signature]

Print Name Signature

[redacted]

223

ROCKY FLATS ENVIRONMENTAL TECHNOLOGY SITE

Drawing Showing Survey Points

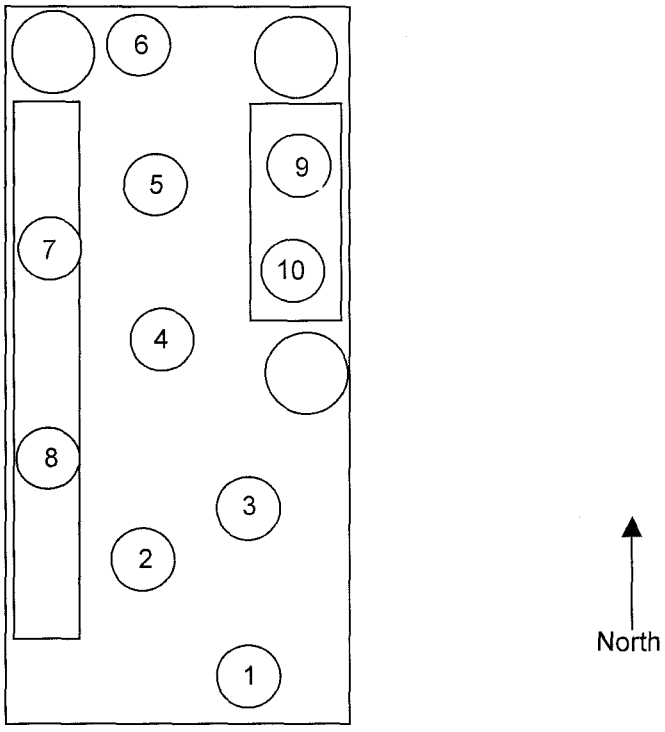

224

ROCKY FLATS ENVIRONMENTAL TECHNOLOGY SITE

INSTRUMENT DATA

Mfg.	Eberline	Mfg.	NE Electra	Mfg.	NE Electra
Model	SAC-4	Model	DP-6	Model	DP-6
Serial #	959	Serial #	3110	Serial #	1681
Cal Due	1/18/03	Cal Due	11/29/02	Cal Due	11/22/02
Bkg	0.1 cpmα	Bkg	7 cpmβ	Bkg	7 cpmα
Eff.	33 %	Eff.	20.9 %	Eff.	21.5 %
MDA	20 dpmα	MDA	72 dpmβ	MDA	70 dpmα

Mfg.	Eberline	Mfg.	Eberline	Mfg.	NE Electra
Model	BC-4	Model	DP-6	Model	DP-6
Serial #	700	Serial #	3110	Serial #	1681
Cal Due	12/13/02	Cal Due	11/29/02	Cal Due	11/22/02
Bkg	31 cpmα	Bkg	930 cpmβ	Bkg	782 cpmβ
Eff.	25 %	Eff.	34 %	Eff.	32.4 %
MDA	200 dpmα	MDA	425 dpmβ	MDA	410 dpmβ

Survey Type:

Building: 788

Location: Solar ponds

Purpose: Sanitary Waste

RWP #: 02-RISS-020

Date: 10/9/02 Time: 1500

[redacted]

PRN/REN # : NA

Comments: Scanned, swiped, and patted 15% of the top of asphalt.

SURVEY RESULTS

Swipe #	LOCATION	ALPHA Swipe dpm/100cm2	ALPHA Direct dpm/100cm2	ALPHA Wipe dpm/wipe	BETA Swipe dpm/100cm2	BETA Direct dpm/100cm2	BETA Wipe dpm/wipe
1	Asphalt	<20	33	NA	<200	929	NA
2	Asphalt	<20	56		<200	537	
3	Asphalt	<20	33		<200	636	
4	Asphalt	<20	28		<200	898	
5	Asphalt	<20	19		<200	898	
6	Asphalt	<20	37		<200	938	
7	Asphalt	<20	42		<200	963	
8	Asphalt	<20	28		<200	620	
9	Asphalt	<20	28		<200	750	
10	Asphalt	<20	0		<200	769	
11	Asphalt	<20	56		<200	475	
12	Asphalt	<20	37		<200	457	
13	Asphalt	<20	23		<200	512	
14	Asphalt	<20	42		<200	725	
15	Asphalt	<20	28		<200	725	
16	Asphalt	<20	37		<200	355	
17	Asphalt	<20	23		<200	796	
18	Asphalt	<20	28		<200	355	
19	Asphalt	<20	42	▼	<200	769	▼
20	Asphalt	<20	37	NA	<200	735	NA

Date Reviewed: 10-10-02 **RS Supervision:** S GERNAAT / [redacted]

Print Name Signature

ROCKY FLATS ENVIRONMENTAL TECHNOLOGY SITE

SURVEY RESULTS

Swipe #	LOCATION	ALPHA Swipe dpm/100cm2	ALPHA Direct dpm/100cm2	ALPHA Wipe dpm/wipe	BETA Swipe dpm/100cm2	BETA Direct dpm/100cm2	BETA Wipe dpm/wipe
21	Asphalt	<20	23	NA	<200	586	NA
22	Asphalt	<20	33		<200	216	
23	Asphalt	<20	28		<200	590	
24	Asphalt	<20	23		<200	528	
25	Asphalt	<20	9		<200	411	
26	Asphalt	<20	14		<200	130	
27	Asphalt	<20	23		<200	472	
28	Asphalt	<20	5		<200	500	
29	Asphalt	<20	28		<200	972	
30	Asphalt	<20	0		<200	284	
31	Asphalt	<20	14		<200	559	
NA	NA	NA	NA		NA	NA	
NA	NA	NA	NA	NA	NA	NA	NA

ROCKY FLATS ENVIRONMENTAL TECHNOLOGY SITE

Drawing Showing Survey Points

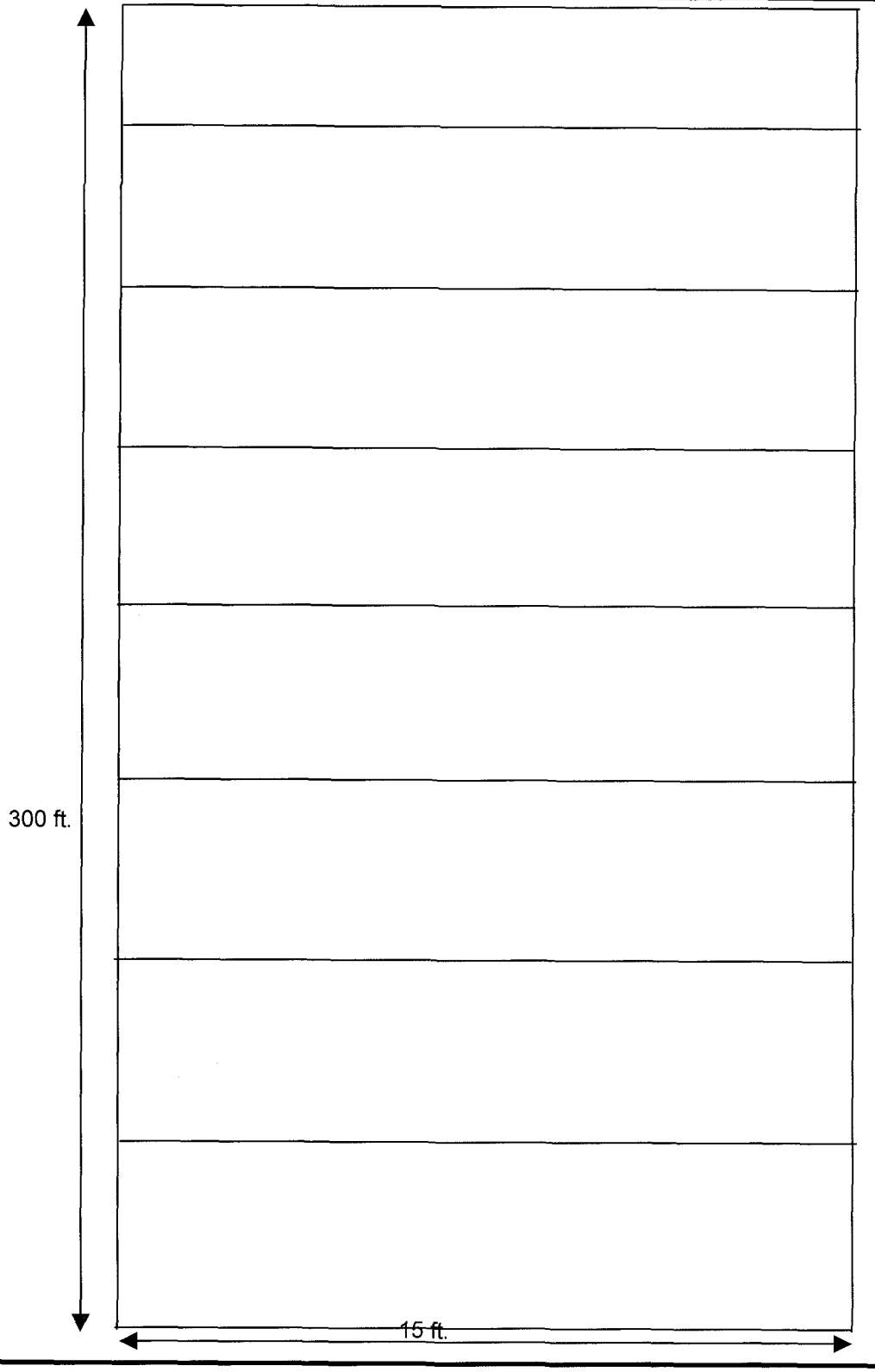

227

ROCKY FLATS ENVIRONMENTAL TECHNOLOGY SITE

INSTRUMENT DATA

Mfg.	Eberline	Mfg.	Eberline	Mfg.	NE Electra
Model	SAC-4	Model	BC-4	Model	DP-6
Serial #	959	Serial #	835	Serial #	1681
Cal Due	1/18/03	Cal Due	9/17/03	Cal Due	11/22/02
Bkg	0.1 cpmα	Bkg	31.8 cpmβ	Bkg	5 cpmα
Eff.	33 %	Eff.	25 %	Eff.	21.5 %
MDA	20 dpmα	MDA	200 dpmβ	MDA	61 dpmα

Mfg.	Eberline	Mfg.	Eberline	Mfg.	NE Electra
Model	SAC-4	Model	BC-4	Model	DP-6
Serial #	NA	Serial #	NA	Serial #	1681
Cal Due	NA	Cal Due	NA	Cal Due	11/22/02
Bkg	NA cpmα	Bkg	NA cpmβ	Bkg	452 cpmβ
Eff.	33 %	Eff.	25 %	Eff.	32.4 %
MDA	20 dpmα	MDA	200 dpmβ	MDA	313 dpmβ

Survey Type:

Building: 788

Location: Solar ponds

Purpose: daily

RWP #: 02-RISS-020

Date: 10/9/02 Time: 1500

[redacted]

RCT: NA / NA / NA

Print name Signature Emp. #

PRN/REN # : NA

Comments: N.E. Bkg. Taken in field.

SURVEY RESULTS

Swipe #	LOCATION	ALPHA Swipe dpm/100cm2	ALPHA Direct dpm/100cm2	ALPHA Wipe dpm/wipe	BETA Swipe dpm/100cm2	BETA Direct dpm/100cm2	BETA Wipe dpm/wipe
1	Backhoe	<20	<61	NA	<200	<313	NA
2	Backhoe	<20	<61		<200	<313	
3	Backhoe	<20	<61		<200	<313	
4	Backhoe	<20	<61		<200	<313	
5	Backhoe	<20	<61		<200	<313	
6	Excavator	<20	<61		<200	<313	
7	Excavator	<20	<61		<200	<313	
8	Excavator	<20	<61		<200	<313	
9	Excavator	<20	<61		<200	<313	
10	Excavator	<20	<61		<200	<313	
11	Loader	<20	<61		<200	<313	
12	Loader	<20	<61		<200	<313	
13	Loader	<20	<61		<200	<313	
14	Loader	<20	<61		<200	<313	
15	Loader	<20	<61		<200	<313	
NA	NA	NA	NA		NA	NA	
NA	NA	NA	NA	NA	NA	NA	NA

Date Reviewed: 10-30-02 **RS Supervision:** S Sigmon / [redacted]

Print Name Signature

228

ROCKY FLATS ENVIRONMENTAL TECHNOLOGY SITE

Drawing Showing Survey Points

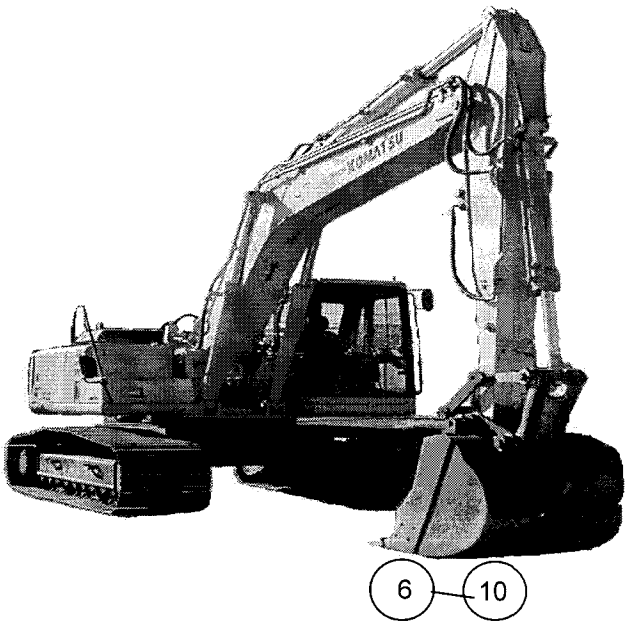

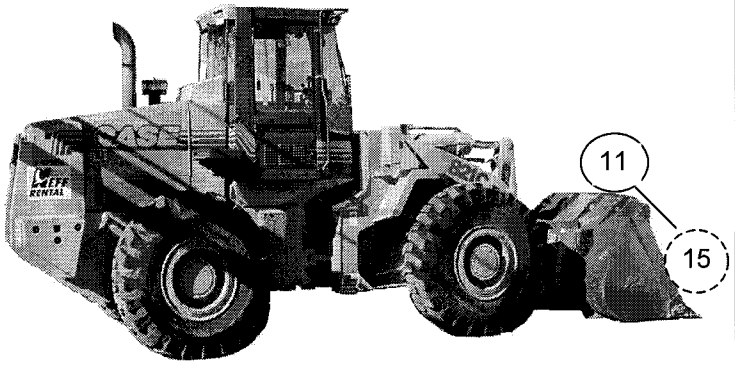

229

ROCKY FLATS ENVIRONMENTAL TECHNOLOGY SITE

INSTRUMENT DATA

Mfg.	Eberline	Mfg.	Eberline	Mfg.	NE Electra
Model	SAC-4	Model	BC-4	Model	DP-6
Serial #	959	Serial #	911	Serial #	1681
Cal Due	1/18/02	Cal Due	10/30/02	Cal Due	11/22/02
Bkg	0.3 cpmα	Bkg	35.3 cpmβ	Bkg	4 cpmα
Eff.	33 %	Eff.	25 %	Eff.	21.5 %
MDA	20 dpmα	MDA	200 dpmβ	MDA	56 dpmα

Mfg.	Eberline	Mfg.	Eberline	Mfg.	NE Electra
Model	SAC-4	Model	BC-4	Model	DP-6
Serial #	NA	Serial #	NA	Serial #	1681
Cal Due		Cal Due		Cal Due	11/22/02
Bkg	cpmα	Bkg	cpmβ	Bkg	420 cpmβ
Eff.	%	Eff.	%	Eff.	32.4 %
MDA	NA dpmα	MDA	NA dpmβ	MDA	302 dpmβ

Survey Type: Contamination
Building: 788
Location: East of solar ponds
Purpose: Receipt survey

RWP #: NA

Date: 10/8/02 Time: 1215

[redacted]

RCT: NA / NA / NA
Print name Signature Emp. #

PRN/REN # : NA
Comments: Receipt for intermodal shipping containers from Envirocare. The swipes counted 10/9/02. Wipes taken approximately 15 square feet in area.

SURVEY RESULTS

Swipe #	LOCATION	ALPHA Swipe dpm/100cm2	ALPHA Direct dpm/100cm2	ALPHA Wipe dpm/wipe	BETA Swipe dpm/100cm2	BETA Direct dpm/100cm2	BETA Wipe dpm/wipe
1	See map	< 20	NA	< 56	< 200	NA	< 302
2	See map	NA	NA	< 56	NA	NA	< 302
3	See map	NA	NA	< 56	NA	NA	< 302
4	See map	NA	NA	< 56	NA	NA	< 302
5	See map	< 20	NA	NA	< 200	NA	NA
6	See map	< 20	NA	NA	< 200	NA	NA
7	See map	< 20	NA	NA	< 200	NA	NA
8	See map	< 20	NA	NA	< 200	NA	NA
9	See map	< 20	NA	NA	< 200	NA	NA
10	See map	< 20	NA	NA	< 200	NA	NA
11	See map	< 20	NA	NA	< 200	NA	NA
12	See map	< 20	NA	NA	< 200	NA	NA
13	See map	< 20	NA	NA	< 200	NA	NA
14	See map	< 20	NA	NA	< 200	NA	NA
NA	NA	NA	NA	NA	NA	NA	NA
NA	NA	NA	NA	NA	NA	NA	NA
NA	NA	NA	NA	NA	NA	NA	NA
NA	NA	NA	NA	NA	NA	NA	NA
NA	NA	NA	NA	NA	NA	NA	NA
NA	NA	NA	NA	NA	NA	NA	NA

Date Reviewed: 10-13-02 **RS Supervision:** [redacted]
Print Name Signature

230

Drawing Showing Survey Points

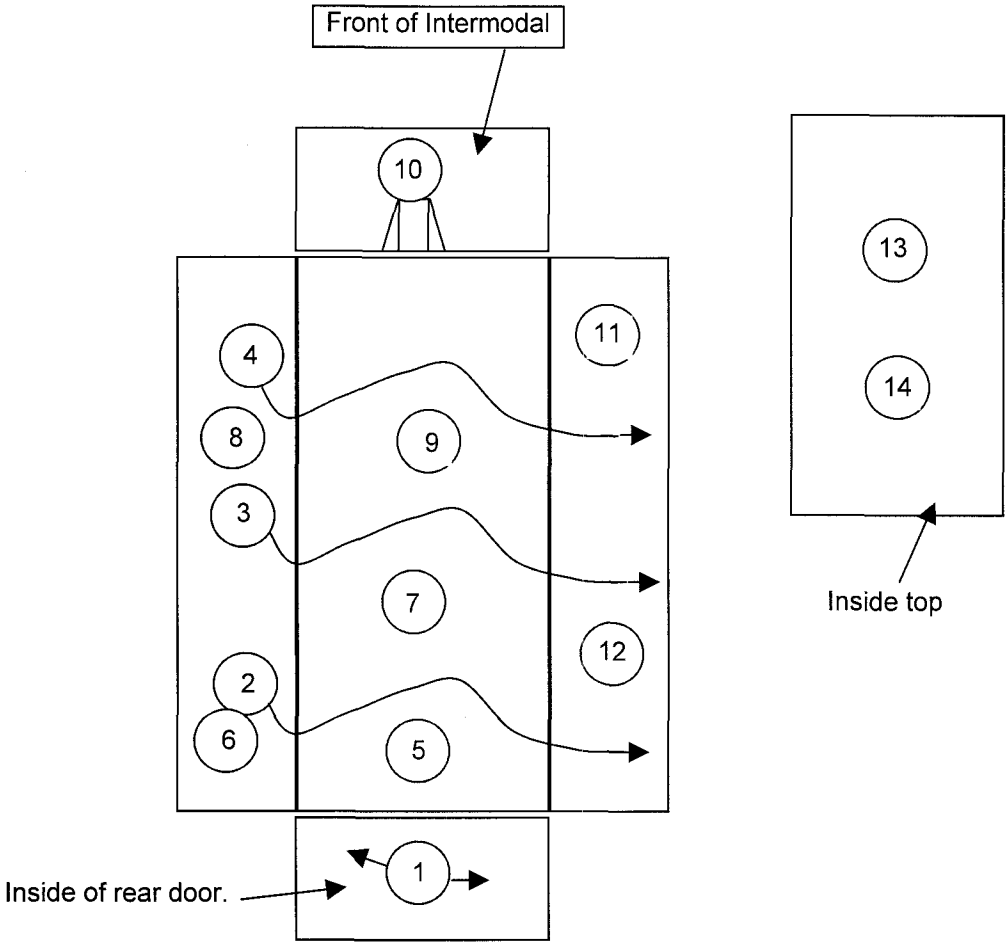

Typical survey performed on Intermodals GfLU- 001139, GFLU-001082, GFLU-1059, GFLU-001063, GFLU-001074, GFLU-001055, GFLU-001094.

231

ROCKY FLATS ENVIRONMENTAL TECHNOLOGY SITE

INSTRUMENT DATA

Mfg.	Eberline	Mfg.	Eberline	Mfg.	NE Electra
Model	SAC-4	Model	BC-4	Model	DP-6
Serial #	959	Serial #	911	Serial #	NA
Cal Due	1/18/02	Cal Due	10/30/02	Cal Due	
Bkg	0.3 cpmα	Bkg	35.3 cpmβ	Bkg	cpmα
Eff.	33 %	Eff.	25 %	Eff.	%
MDA	20 dpmα	MDA	200 dpmβ	MDA	NA dpmα

Mfg.	Eberline	Mfg.	Eberline	Mfg.	NE Electra
Model	SAC-4	Model	BC-4	Model	DP-6
Serial #	NA	Serial #	NA	Serial #	NA
Cal Due		Cal Due		Cal Due	
Bkg	cpmα	Bkg	cpmβ	Bkg	cpmβ
Eff.	%	Eff.	%	Eff.	%
MDA	NA dpmα	MDA	NA dpmβ	MDA	NA dpmβ

Survey Type: Contamination
Building: 788
Location: general area
Purpose: daily

RWP #: 02-RISS-020

Date: 10/8/02 Time: 1600

[redacted]

PRN/REN # : NA
Comments:

SURVEY RESULTS

Swipe #	LOCATION	ALPHA Swipe dpm/100cm2	ALPHA Direct dpm/100cm2	ALPHA Wipe dpm/wipe	BETA Swipe dpm/100cm2	BETA Direct dpm/100cm2	BETA Wipe dpm/wipe
1	loader	< 20	NA	NA	< 200	NA	NA
2	loader	< 20	NA	NA	< 200	NA	NA
3	loader	< 20	NA	NA	< 200	NA	NA
4	loader	< 20	NA	NA	< 200	NA	NA
5	loader	< 20	NA	NA	< 200	NA	NA
6	trackhoe	< 20	NA	NA	< 200	NA	NA
7	trackhoe	< 20	NA	NA	< 200	NA	NA
8	trackhoe	< 20	NA	NA	< 200	NA	NA
9	trackhoe	< 20	NA	NA	< 200	NA	NA
10	trackhoe	< 20	NA	NA	< 200	NA	NA
11	backhoe	< 20	NA	NA	< 200	NA	NA
12	backhoe	< 20	NA	NA	< 200	NA	NA
13	backhoe	< 20	NA	NA	< 200	NA	NA
14	backhoe	< 20	NA	NA	< 200	NA	NA
15	backhoe	< 20	NA	NA	< 200	NA	NA
NA	NA	NA	NA	NA	NA	NA	NA
NA	NA	NA	NA	NA	NA	NA	NA
NA	NA	NA	NA	NA	NA	NA	NA
NA	NA	NA	NA	NA	NA	NA	NA
NA	NA	NA	NA	NA	NA	NA	NA

Date Reviewed: 10-13-02 **RS Supervision:** [redacted]
Print Name Signature

232

Drawing Showing Survey Points

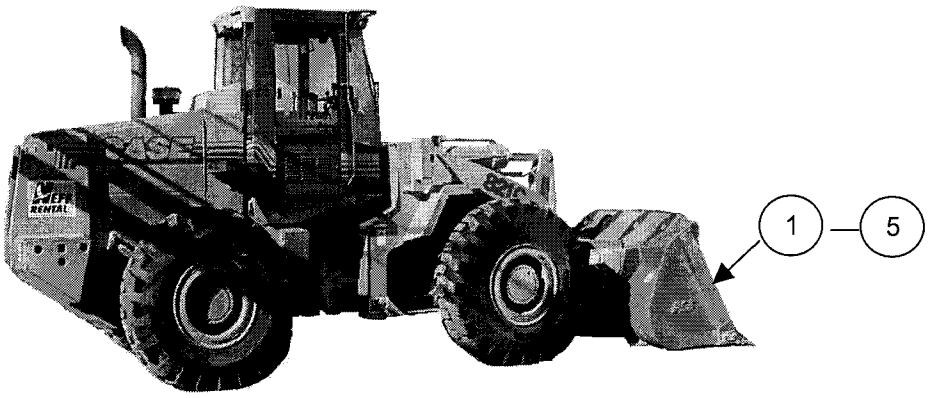

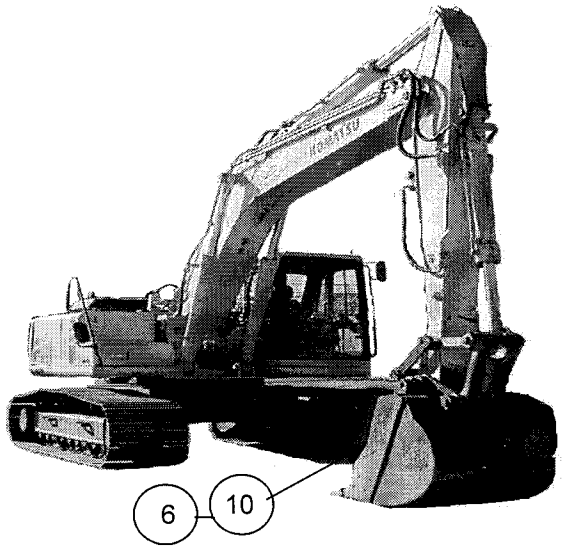

233

ROCKY FLATS ENVIRONMENTAL TECHNOLOGY SITE

INSTRUMENT DATA

Mfg.	Eberline	Mfg.	Eberline	Mfg.	NE Electra
Model	SAC-4	Model	BC-4	Model	DP-6
Serial #	959	Serial #	835	Serial #	1681
Cal Due	1/18/03	Cal Due	9/17/03	Cal Due	11/22/02
Bkg	0 cpmα	Bkg	33 cpmβ	Bkg	5 cpmα
Eff.	33 %	Eff.	25 %	Eff.	21.5 %
MDA	20 dpmα	MDA	200 dpmβ	MDA	61 dpmα

Mfg.	Eberline	Mfg.	Eberline	Mfg.	NE Electra
Model	SAC-4	Model	BC-4	Model	DP-6
Serial #	NA	Serial #	NA	Serial #	1681
Cal Due	NA	Cal Due	NA	Cal Due	11/22/02
Bkg	NA cpmα	Bkg	NA cpmβ	Bkg	359 cpmβ
Eff.	33 %	Eff.	25 %	Eff.	32.4 %
MDA	20 dpmα	MDA	200 dpmβ	MDA	280 dpmβ

Survey Type:

Building: 788

Location: Solar ponds

Purpose: soil removal/ hotspots

RWP #: 02-RISS-020

Date: 10/7/02 Time: 1500

[redacted]

RCT: NA NA NA

Print name Signature Emp. #

PRN/REN # : NA

Comments: Survey was was performed after excavations of each soil spot.

SURVEY RESULTS

		ALPHA			BETA		
Swipe	LOCATION	Swipe	Direct	Wipe	Swipe	Direct	Wipe
#	Excavator	dpm/100cm2	dpm/100cm2	dpm/wipe	dpm/100cm2	dpm/100cm2	dpm/wipe
1	Excavator	<20	<61	NA	<200	<280	NA
2	Excavator	<20	<61		<200	<280	
3	Excavator	<20	<61		<200	<280	
4	Excavator	<20	<61		<200	<280	
5	Excavator	<20	<61		<200	<280	
6	Excavator	<20	<61		<200	<280	
7	Excavator	<20	<61		<200	<280	
8	Excavator	<20	<61		<200	<280	
9	Excavator	<20	<61		<200	<280	
10	Excavator	<20	<61		<200	<280	
NA	NA	NA	NA		NA	NA	
NA	NA	NA	NA	NA	NA	NA	NA

Date Reviewed: 10-13-02 **RS Supervision:** S Thomson / [redacted]

Print Name Signature

234

Drawing Showing Survey Points

ROCKY FLATS ENVIRONMENTAL TECHNOLOGY SITE

INSTRUMENT DATA

Mfg.	Eberline	Mfg.	Eberline	Mfg.	NE Electra
Model	SAC-4	Model	BC-4	Model	DP-6
Serial #	959	Serial #	835	Serial #	1681
Cal Due	1/18/03	Cal Due	9/17/03	Cal Due	11/22/02
Bkg	0 cpmα	Bkg	33 cpmβ	Bkg	5 cpmα
Eff.	33 %	Eff.	25 %	Eff.	21.5 %
MDA	20 dpmα	MDA	200 dpmβ	MDA	61 dpmα

Mfg.	Eberline	Mfg.	Eberline	Mfg.	NE Electra
Model	SAC-4	Model	BC-4	Model	DP-6
Serial #	NA	Serial #	NA	Serial #	1681
Cal Due	NA	Cal Due	NA	Cal Due	11/22/02
Bkg	NA cpmα	Bkg	NA cpmβ	Bkg	359 cpmβ
Eff.	33 %	Eff.	25 %	Eff.	32.4 %
MDA	20 dpmα	MDA	200 dpmβ	MDA	280 dpmβ

Survey Type:

Building: 788

Location: Solar ponds

Purpose: daily

RWP #: 02-RISS-020

Date: 10/7/02 Time: 1500

[redacted]

RCT: NA / NA / NA

Print name Signature Emp. #

PRN/REN # : NA

Comments: NA

SURVEY RESULTS

Swipe #	LOCATION	ALPHA Swipe dpm/100cm2	ALPHA Direct dpm/100cm2	ALPHA Wipe dpm/wipe	BETA Swipe dpm/100cm2	BETA Direct dpm/100cm2	BETA Wipe dpm/wipe
1	Loader	<20	<61	NA	<200	<280	NA
2	Loader	<20	<61		<200	<280	
3	Loader	<20	<61		<200	<280	
4	Loader	<20	<61		<200	<280	
5	Loader	<20	<61		<200	<280	
6	backhoe	<20	<61		<200	<280	
7	backhoe	<20	<61		<200	<280	
8	backhoe	<20	<61		<200	<280	
9	backhoe	<20	<61		<200	<280	
10	backhoe	<20	<61		<200	<280	
11	Excavator	<20	<61		<200	<280	
12	Excavator	<20	<61		<200	<280	
13	Excavator	<20	<61		<200	<280	
14	Excavator	<20	<61		<200	<280	
15	Excavator	<20	<61		<200	<280	
NA	NA	NA	NA		NA	NA	
NA	NA	NA	NA	NA	NA	NA	NA

Date Reviewed: 10·13·02 **RS Supervision:** [signature] / [signature]

Print Name Signature [redacted]

236

ROCKY FLATS ENVIRONMENTAL TECHNOLOGY SITE

Drawing Showing Survey Points

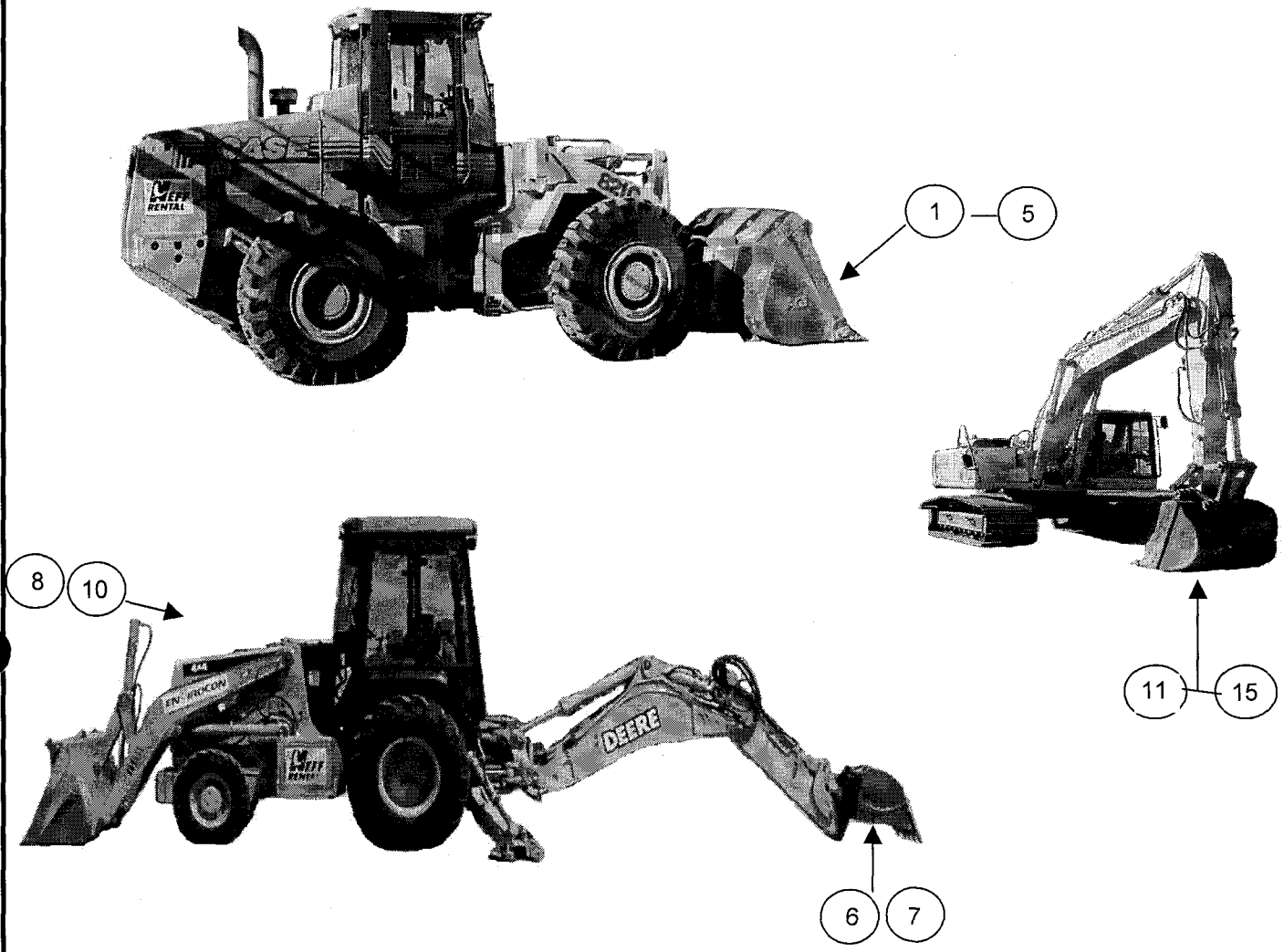

237

ROCKY FLATS ENVIRONMENTAL TECHNOLOGY SITE

INSTRUMENT DATA

Mfg.	Eberline	Mfg.	Eberline	Mfg.	NE Electra
Model	SAC-4	Model	BC-4	Model	DP-6
Serial #	959	Serial #	911	Serial #	2394
Cal Due	1/18/02	Cal Due	10/30/02	Cal Due	3/5/03
Bkg	0 cpmα	Bkg	32.0 cpmβ	Bkg	1 cpmα
Eff.	33 %	Eff.	25 %	Eff.	22.1 %
MDA	20 dpmα	MDA	200 dpmβ	MDA	33 dpmα
Mfg.	Eberline	Mfg.	Eberline	Mfg.	NE Electra
Model	SAC-4	Model	BC-4	Model	DP-6
Serial #	NA	Serial #	NA	Serial #	2394
Cal Due		Cal Due		Cal Due	3/5/03
Bkg	cpmα	Bkg	cpmβ	Bkg	343 cpmβ
Eff.	%	Eff.	%	Eff.	30.2 %
MDA	NA dpmα	MDA	NA dpmβ	MDA	294 dpmβ

Survey Type: Contamination
Building: Solar Pond
Location: general area
Purpose: Post Hot spot dig survey

RWP #: 02-RISS-020

Date: 10/4/02 Time: 1600

[redacted]

RCT: NA / NA / NA
Print name Signature Emp. #

PRN/REN # : NA
Comments: Survey of backhoe bucket after digging up hot spot on north east corner of "A" Solar Pond.

SURVEY RESULTS

Swipe #	LOCATION	ALPHA Swipe dpm/100cm2	ALPHA Direct dpm/100cm2	ALPHA Wipe dpm/wipe	BETA Swipe dpm/100cm2	BETA Direct dpm/100cm2	BETA Wipe dpm/wipe
1	loader bucket	< 20	<33	NA	< 200	<294	NA
2	loader bucket	< 20	<33	NA	< 200	<294	NA
3	loader bucket	< 20	<33	NA	< 200	<294	NA
4	loader bucket	< 20	<33	NA	< 200	<294	NA
5	loader bucket	< 20	<33	NA	< 200	<294	NA
6	NA	NA	NA	NA	NA	NA	NA
7	NA	NA	NA	NA	NA	NA	NA
8	NA	NA	NA	NA	NA	NA	NA
9	NA	NA	NA	NA	NA	NA	NA
10	NA	NA	NA	NA	NA	NA	NA
11	NA	NA	NA	NA	NA	NA	NA
12	NA	NA	NA	NA	NA	NA	NA
13	NA	NA	NA	NA	NA	NA	NA
14	NA	NA	NA	NA	NA	NA	NA
15	NA	NA	NA	NA	NA	NA	NA
NA	NA	NA	NA	NA	NA	NA	NA
NA	NA	NA	NA	NA	NA	NA	NA
NA	NA	NA	NA	NA	NA	NA	NA
NA	NA	NA	NA	NA	NA	NA	NA
NA	NA	NA	NA	NA	NA	NA	NA

Date Reviewed: 10-13-02 **RS Supervision:** [redacted]
Print Name Signature

238

Drawing Showing Survey Points

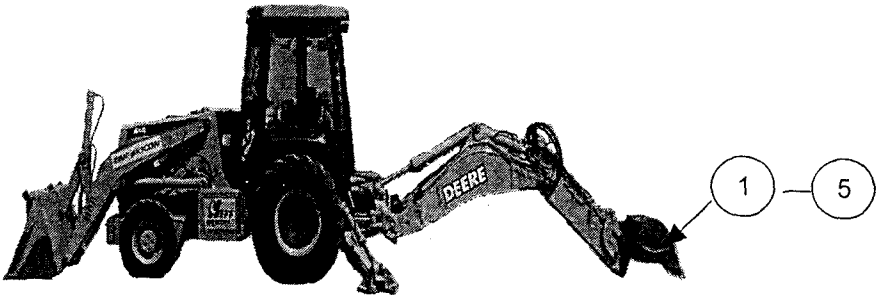

239

ROCKY FLATS ENVIRONMENTAL TECHNOLOGY SITE

INSTRUMENT DATA

Mfg.	Eberline	Mfg.	Eberline	Mfg.	NE Electra
Model	SAC-4	Model	BC-4	Model	DP-6
Serial #	959	Serial #	911	Serial #	2394
Cal Due	1/18/02	Cal Due	10/30/02	Cal Due	3/5/03
Bkg	0 cpmα	Bkg	32.0 cpmβ	Bkg	1 cpmα
Eff.	33 %	Eff.	25 %	Eff.	22.1 %
MDA	20 dpmα	MDA	200 dpmβ	MDA	33 dpmα

Mfg.	Eberline	Mfg.	Eberline	Mfg.	NE Electra
Model	SAC-4	Model	BC-4	Model	DP-6
Serial #	NA	Serial #	NA	Serial #	2394
Cal Due		Cal Due		Cal Due	3/5/03
Bkg	cpmα	Bkg	cpmβ	Bkg	343 cpmβ
Eff.	%	Eff.	%	Eff.	30.2 %
MDA	NA dpmα	MDA	NA dpmβ	MDA	294 dpmβ

Survey Type: Contamination
Building: Solar Pond
Location: general area
Purpose: Post Hot spot dig survey

RWP #: 02-RISS-020

Date: 10/4/02 Time: 1600

[redacted]

RCT: NA / NA / NA
Print name Signature Emp. #

PRN/REN # : NA
Comments: Survey of backhoe bucket after digging up hot spot on north east corner of "A" Solar Pond.

SURVEY RESULTS

Swipe #	LOCATION	ALPHA Swipe	ALPHA Direct	ALPHA Wipe	BETA Swipe	BETA Direct	BETA Wipe
		dpm/100cm2	dpm/100cm2	dpm/wipe	dpm/100cm2	dpm/100cm2	dpm/wipe
1	loader bucket	< 20	<33	NA	< 200	<294	NA
2	loader bucket	< 20	<33	NA	< 200	<294	NA
3	loader bucket	< 20	<33	NA	< 200	<294	NA
4	loader bucket	< 20	<33	NA	< 200	<294	NA
5	loader bucket	< 20	<33	NA	< 200	<294	NA
6	NA	NA	NA	NA	NA	NA	NA
7	NA	NA	NA	NA	NA	NA	NA
8	NA	NA	NA	NA	NA	NA	NA
9	NA	NA	NA	NA	NA	NA	NA
10	NA	NA	NA	NA	NA	NA	NA
11	NA	NA	NA	NA	NA	NA	NA
12	NA	NA	NA	NA	NA	NA	NA
13	NA	NA	NA	NA	NA	NA	NA
14	NA	NA	NA	NA	NA	NA	NA
15	NA	NA	NA	NA	NA	NA	NA
NA	NA	NA	NA	NA	NA	NA	NA
NA	NA	NA	NA	NA	NA	NA	NA
NA	NA	NA	NA	NA	NA	NA	NA
NA	NA	NA	NA	NA	NA	NA	NA
NA	NA	NA	NA	NA	NA	NA	NA

Date Reviewed: 10-30-02 **RS Supervision:** S Johnson / [redacted]
Print Name Signature

240

Drawing Showing Survey Points

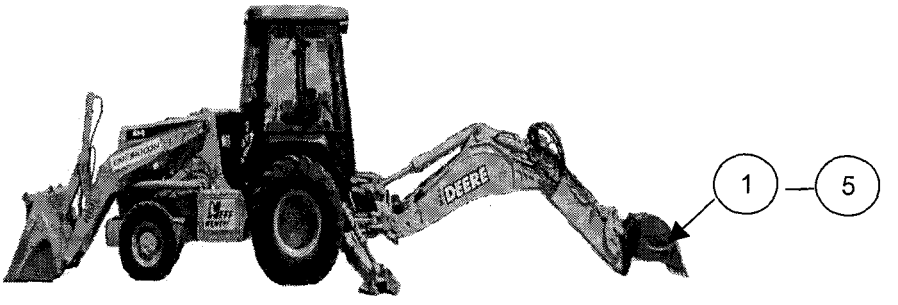

ROCKY FLATS ENVIRONMENTAL TECHNOLOGY SITE

INSTRUMENT DATA

Mfg.	Eberline	Mfg.	Eberline	Mfg.	NE Electra
Model	SAC-4	Model	BC-4	Model	DP-6
Serial #	959	Serial #	911	Serial #	NA
Cal Due	1/18/02	Cal Due	10/30/02	Cal Due	
Bkg	.0 cpmα	Bkg	32.0 cpmβ	Bkg	cpmα
Eff.	33 %	Eff.	25 %	Eff.	%
MDA	20 dpmα	MDA	200 dpmβ	MDA	NA dpmα

Mfg.	Eberline	Mfg.	Eberline	Mfg.	NE Electra
Model	SAC-4	Model	BC-4	Model	DP-6
Serial #	NA	Serial #	NA	Serial #	NA
Cal Due		Cal Due		Cal Due	
Bkg	cpmα	Bkg	cpmβ	Bkg	cpmβ
Eff.	%	Eff.	%	Eff.	%
MDA	NA dpmα	MDA	NA dpmβ	MDA	NA dpmβ

Survey Type: Contamination
Building: 788
Location: general area
Purpose: daily

RWP #: 02-RISS-020

Date: 10/4/02 Time: 1600

[redacted]

PRN/REN # : NA
Comments:

SURVEY RESULTS

Swipe #	LOCATION	ALPHA Swipe dpm/100cm2	ALPHA Direct dpm/100cm2	ALPHA Wipe dpm/wipe	BETA Swipe dpm/100cm2	BETA Direct dpm/100cm2	BETA Wipe dpm/wipe
1	loader	< 20	NA	NA	< 200	NA	NA
2	loader	< 20	NA	NA	< 200	NA	NA
3	loader	< 20	NA	NA	< 200	NA	NA
4	loader	< 20	NA	NA	< 200	NA	NA
5	loader	< 20	NA	NA	< 200	NA	NA
6	trackhoe	< 20	NA	NA	< 200	NA	NA
7	trackhoe	< 20	NA	NA	< 200	NA	NA
8	trackhoe	< 20	NA	NA	< 200	NA	NA
9	trackhoe	< 20	NA	NA	< 200	NA	NA
10	trackhoe	< 20	NA	NA	< 200	NA	NA
11	backhoe	< 20	NA	NA	< 200	NA	NA
12	backhoe	< 20	NA	NA	< 200	NA	NA
13	backhoe	< 20	NA	NA	< 200	NA	NA
14	backhoe	< 20	NA	NA	< 200	NA	NA
15	backhoe	< 20	NA	NA	< 200	NA	NA
NA	NA	NA	NA	NA	NA	NA	NA
NA	NA	NA	NA	NA	NA	NA	NA
NA	NA	NA	NA	NA	NA	NA	NA
NA	NA	NA	NA	NA	NA	NA	NA
NA	NA	NA	NA	NA	NA	NA	NA

Date Reviewed: 10-13-02 **RS Supervision:** [redacted]
Print Name Signature

242

Drawing Showing Survey Points

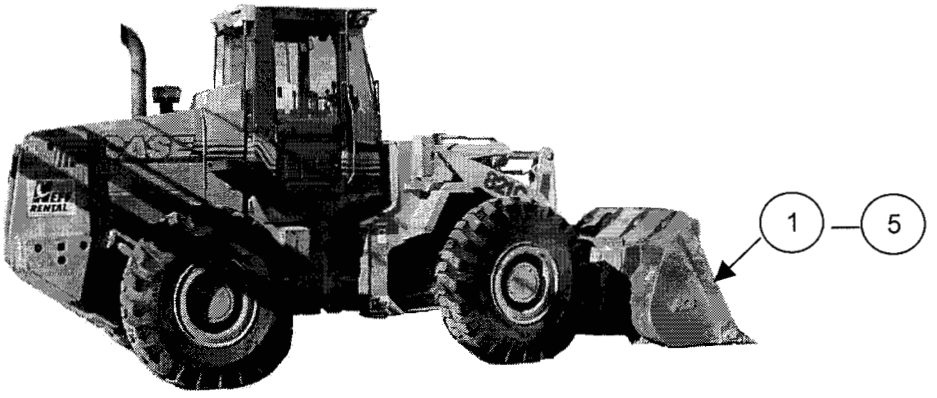

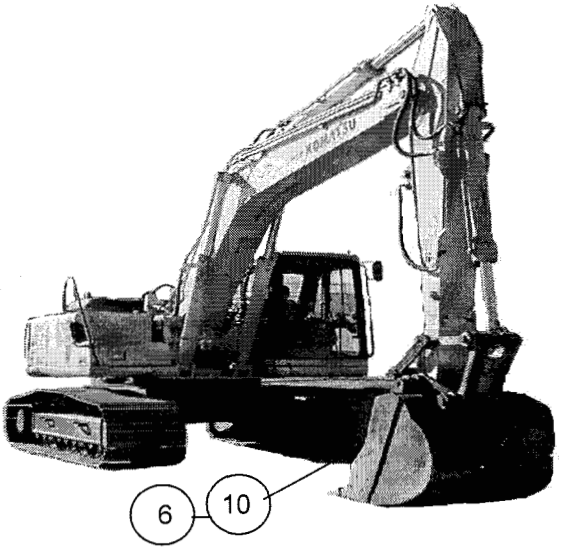

ROCKY FLATS ENVIRONMENTAL TECHNOLOGY SITE

INSTRUMENT DATA

Mfg.	Eberline	Mfg.	Eberline	Mfg.	NE Electra
Model	SAC-4	Model	BC-4	Model	DP-6
Serial #	959	Serial #	911	Serial #	NA
Cal Due	1/18/02	Cal Due	10/30/02	Cal Due	
Bkg	0 cpmα	Bkg	31.5 cpmβ	Bkg	cpmα
Eff.	33 %	Eff.	25 %	Eff.	%
MDA	20 dpmα	MDA	200 dpmβ	MDA	NA dpmα

Mfg.	Eberline	Mfg.	Eberline	Mfg.	NE Electra
Model	SAC-4	Model	BC-4	Model	DP-6
Serial #	NA	Serial #	NA	Serial #	NA
Cal Due		Cal Due		Cal Due	
Bkg	cpmα	Bkg	cpmβ	Bkg	cpmβ
Eff.	%	Eff.	%	Eff.	%
MDA	NA dpmα	MDA	NA dpmβ	MDA	NA dpmβ

Survey Type: Contamination
Building: 788
Location: access cargo
Purpose: weekly

RWP #: 02-RISS-020

Date: 10/4/02 Time: 1600

[redacted]

PRN/REN # : NA
Comments:

SURVEY RESULTS

Swipe #	LOCATION	ALPHA Swipe dpm/100cm2	ALPHA Direct dpm/100cm2	ALPHA Wipe dpm/wipe	BETA Swipe dpm/100cm2	BETA Direct dpm/100cm2	BETA Wipe dpm/wipe
1	See map	< 20	NA	NA	< 200	NA	NA
2	See map	< 20			< 200		
3	See map	< 20			< 200		
4	See map	< 20			< 200		
5	See map	< 20			< 200		
6	See map	< 20			< 200		
7	See map	< 20			< 200		
8	See map	< 20			< 200		
NA	NA	NA			NA		
NA	NA	NA	NA	NA	NA	NA	NA

Date Reviewed: 10-13-02 **RS Supervision:** [redacted]
Print Name Signature

244

Drawing Showing Survey Points

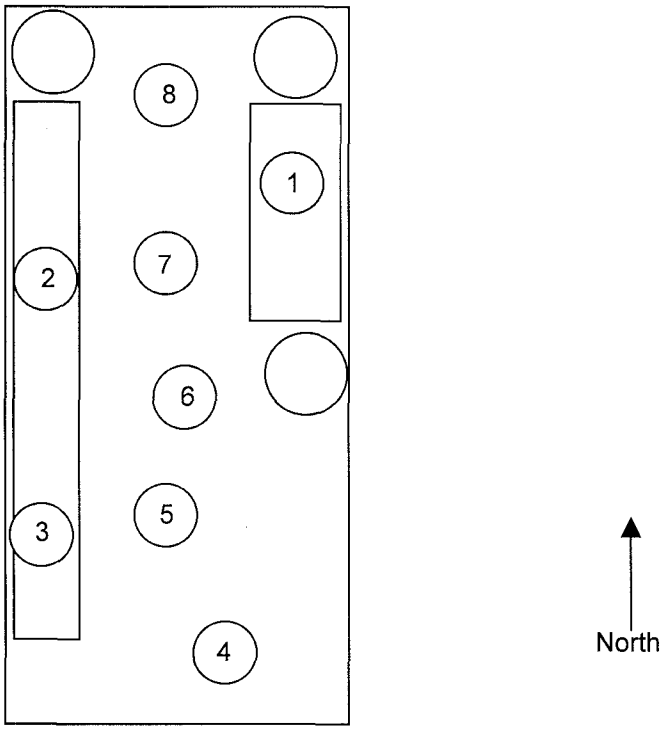

ROCKY FLATS ENVIRONMENTAL TECHNOLOGY SITE

INSTRUMENT DATA

Mfg.	Eberline	Mfg.	NE Electra	Mfg.	NE Electra
Model	SAC-4	Model	DP-6	Model	DP-6
Serial #	959	Serial #	NA	Serial #	3110
Cal Due	1/18/03	Cal Due	NA	Cal Due	11/29/02
Bkg	0.1 cpmα	Bkg	NA cpmα	Bkg	12 cpmα
Eff.	33 %	Eff.	NA %	Eff.	20.9 %
MDA	20 dpmα	MDA	NA dpmα	MDA	90 dpmα

Mfg.	Eberline	Mfg.	NE Electra	Mfg.	NE Electra
Model	BC-4	Model	DP-6	Model	DP-6
Serial #	700	Serial #	NA	Serial #	3110
Cal Due	12/13/02	Cal Due	NA	Cal Due	11/29/02
Bkg	34 cpmα	Bkg	NA cpmβ	Bkg	615 cpmβ
Eff.	25 %	Eff.	NA %	Eff.	34 %
MDA	200 dpmα	MDA	NA dpmβ	MDA	347 dpmβ

Survey Type: Contamination/ Radation
Building: 788 pad
Location: North East corner of pond C
Purpose: recycle

RWP #: 02-RISS-020

Date: 10/3/02 Time: 1500

[redacted]

RCT: NA / NA / NA
Print name Signature Emp. #

PRN/REN # : NA
Comments: Performed one minute pats, swipes, and scanned 15% bottom surface.

SURVEY RESULTS

		ALPHA			BETA		
Swipe #	LOCATION	Swipe	Direct	Wipe	Swipe	Direct	Wipe
		dpm/100cm2	dpm/100cm2	dpm/wipe	dpm/100cm2	dpm/100cm2	dpm/wipe
1	bottom of slab	0	0	NA	28	120	NA
2	bottom of slab	0	0		8	105	
3	bottom of slab	0	62		0	74	
4	bottom of slab	0	43		0	71	
5	bottom of slab	0	71		0	82	
6	bottom of slab	0	67		0	79	
7	bottom of slab	0	24		0	88	
8	bottom of slab	0	14		0	71	
9	bottom of slab	0	0		8	94	
10	bottom of slab	0	53		0	82	
NA	NA	NA	NA		NA	NA	
NA	NA	NA	NA	NA	NA	NA	NA

Date Reviewed: 10-3-02 **RS Supervision:** James W Smith / James W Smith [redacted]
Print Name Signature

246

ROCKY FLATS ENVIRONMENTAL TECHNOLOGY SITE

INSTRUMENT DATA

Mfg.	Eberline	Mfg.	NE Electra	Mfg.	NE Electra
Model	SAC-4	Model	DP-6	Model	DP-6
Serial #	959	Serial #	NA	Serial #	2394
Cal Due	1/18/03	Cal Due	NA	Cal Due	3/5/03
Bkg	0 cpmα	Bkg	NA cpmα	Bkg	5 cpmα
Eff.	33 %	Eff.	NA %	Eff.	22.1 %
MDA	20 dpmα	MDA	NA dpmα	MDA	59 dpmα

Mfg.	Eberline	Mfg.	NE Electra	Mfg.	NE Electra
Model	BC-4	Model	DP-6	Model	DP-6
Serial #	700	Serial #	NA	Serial #	2394
Cal Due	12/13/02	Cal Due	NA	Cal Due	3/5/03
Bkg	30.6 cpmα	Bkg	NA cpmβ	Bkg	553 cpmβ
Eff.	25 %	Eff.	NA %	Eff.	30.2 %
MDA	200 dpmα	MDA	NA dpmβ	MDA	371 dpmβ

Survey Type: Contamination/ Radation
Building: 788 pad
Location: North east corner of pond A
Purpose: LLW

RWP #: 02-RISS-020

Date: 10/1/02 Time: 1500

[redacted]

RCT: NA / NA / NA
Print name Signature Emp. #

PRN/REN # : NA
Comments: Performed one minute pats, swipes, and scanned.

SURVEY RESULTS

Swipe #	LOCATION	ALPHA Swipe dpm/100cm2	ALPHA Direct dpm/100cm2	ALPHA Wipe dpm/wipe	BETA Swipe dpm/100cm2	BETA Direct dpm/100cm2	BETA Wipe dpm/wipe
1	OPWL	0	16	NA	38	304	NA
2	OPWL	0	31		0	178	
3	OPWL	0	22		34	338	
4	OPWL	0	16		22	205	
5	OPWL	0	0		18	109	
6	OPWL	0	0		10	278	
NA	NA	NA	NA		NA	NA	
NA	NA	NA	NA	NA	NA	NA	NA

Date Reviewed: 10-3-02 **RS Supervision:** James W Smith James W Smith [redacted]
Print Name Signature

247

ROCKY FLATS ENVIRONMENTAL TECHNOLOGY SITE

INSTRUMENT DATA

Mfg.	Eberline	Mfg.	Eberline	Mfg.	NE Electra
Model	SAC-4	Model	BC-4	Model	DP-6
Serial #	959	Serial #	911	Serial #	2394
Cal Due	1/18/02	Cal Due	10/30/02	Cal Due	3/5/03
Bkg	0 cpmα	Bkg	32.0 cpmβ	Bkg	1 cpmα
Eff.	33 %	Eff.	25 %	Eff.	22.1 %
MDA	20 dpmα	MDA	200 dpmβ	MDA	33 dpmα
Mfg.	Eberline	Mfg.	Eberline	Mfg.	NE Electra
Model	SAC-4	Model	BC-4	Model	DP-6
Serial #	NA	Serial #	NA	Serial #	2394
Cal Due		Cal Due		Cal Due	3/5/03
Bkg	cpmα	Bkg	cpmβ	Bkg	343 cpmβ
Eff.	%	Eff.	%	Eff.	30.2 %
MDA	NA dpmα	MDA	NA dpmβ	MDA	294 dpmβ

Survey Type: Contamination
Building: Solar Pond
Location: general area
Purpose: Remove Drain line East side of "A"pond
RWP #: 02-RISS-020
Date: 10/4/02 Time: 1600
[redacted]
RCT: NA / NA / NA
Print name Signature Emp. #

PRN/REN # : NA
Comments: Remove drian line east side of "A" Solar Pond.

SURVEY RESULTS

Swipe #	LOCATION	ALPHA Swipe dpm/100cm2	ALPHA Direct dpm/100cm2	ALPHA Wipe dpm/wipe	BETA Swipe dpm/100cm2	BETA Direct dpm/100cm2	BETA Wipe dpm/wipe
1	Inside of line	< 20	<33	NA	< 200	<294	NA
2	Inside of line	< 20	<33	NA	< 200	<294	NA
3	Inside of line	< 20	<33	NA	< 200	<294	NA
4	Inside of line	< 20	<33	NA	< 200	<294	NA
5	Inside of line	< 20	<33	NA	< 200	<294	NA
6	NA	NA	NA	NA	NA	NA	NA
7	NA	NA	NA	NA	NA	NA	NA
8	NA	NA	NA	NA	NA	NA	NA
9	NA	NA	NA	NA	NA	NA	NA
10	NA	NA	NA	NA	NA	NA	NA
11	NA	NA	NA	NA	NA	NA	NA
12	NA	NA	NA	NA	NA	NA	NA
13	NA	NA	NA	NA	NA	NA	NA
14	NA	NA	NA	NA	NA	NA	NA
15	NA	NA	NA	NA	NA	NA	NA
NA	NA	NA	NA	NA	NA	NA	NA
NA	NA	NA	NA	NA	NA	NA	NA
NA	NA	NA	NA	NA	NA	NA	NA
NA	NA	NA	NA	NA	NA	NA	NA
NA	NA	NA	NA	NA	NA	NA	NA

Date Reviewed: 10-13-02 **RS Supervision:** [redacted]
Print Name Signature

248

ROCKY FLATS ENVIRONMENTAL TECHNOLOGY SITE

INSTRUMENT DATA

Mfg.	Eberline	Mfg.	Eberline	Mfg.	NE Electra
Model	SAC-4	Model	BC-4	Model	DP-6
Serial #	959	Serial #	911	Serial #	NA
Cal Due	1/18/02	Cal Due	10/30/02	Cal Due	
Bkg	0 cpmα	Bkg	33.3 cpmβ	Bkg	cpmα
Eff.	33 %	Eff.	25 %	Eff.	%
MDA	20 dpmα	MDA	200 dpmβ	MDA	NA dpmα

Mfg.	Eberline	Mfg.	Eberline	Mfg.	NE Electra
Model	SAC-4	Model	BC-4	Model	DP-6
Serial #	NA	Serial #	NA	Serial #	NA
Cal Due		Cal Due		Cal Due	
Bkg	cpmα	Bkg	cpmβ	Bkg	cpmβ
Eff.	%	Eff.	%	Eff.	%
MDA	NA dpmα	MDA	NA dpmβ	MDA	NA dpmβ

Survey Type: Contamination
Building: 788
Location: general area
Purpose: daily

RWP #: 02-RISS-020

Date: 10/1/02 Time: 1545

[redacted]

PRN/REN # : NA
Comments:

SURVEY RESULTS

Swipe #	LOCATION	ALPHA Swipe dpm/100cm2	ALPHA Direct dpm/100cm2	ALPHA Wipe dpm/wipe	BETA Swipe dpm/100cm2	BETA Direct dpm/100cm2	BETA Wipe dpm/wipe
1	loader	< 20	NA	NA	< 200	NA	NA
2	loader	< 20	NA	NA	< 200	NA	NA
3	loader	< 20	NA	NA	< 200	NA	NA
4	loader	< 20	NA	NA	< 200	NA	NA
5	loader	< 20	NA	NA	< 200	NA	NA
6	trackhoe	< 20	NA	NA	< 200	NA	NA
7	trackhoe	< 20	NA	NA	< 200	NA	NA
8	trackhoe	< 20	NA	NA	< 200	NA	NA
9	trackhoe	< 20	NA	NA	< 200	NA	NA
10	trackhoe	< 20	NA	NA	< 200	NA	NA
11	backhoe	< 20	NA	NA	< 200	NA	NA
12	backhoe	< 20	NA	NA	< 200	NA	NA
13	backhoe	< 20	NA	NA	< 200	NA	NA
14	backhoe	< 20	NA	NA	< 200	NA	NA
15	backhoe	< 20	NA	NA	< 200	NA	NA
NA	NA	NA	NA	NA	NA	NA	NA
NA	NA	NA	NA	NA	NA	NA	NA
NA	NA	NA	NA	NA	NA	NA	NA
NA	NA	NA	NA	NA	NA	NA	NA
NA	NA	NA	NA	NA	NA	NA	NA

Date Reviewed: 10-13-02 **RS Supervision:** [redacted]
Print Name Signature

Drawing Showing Survey Points

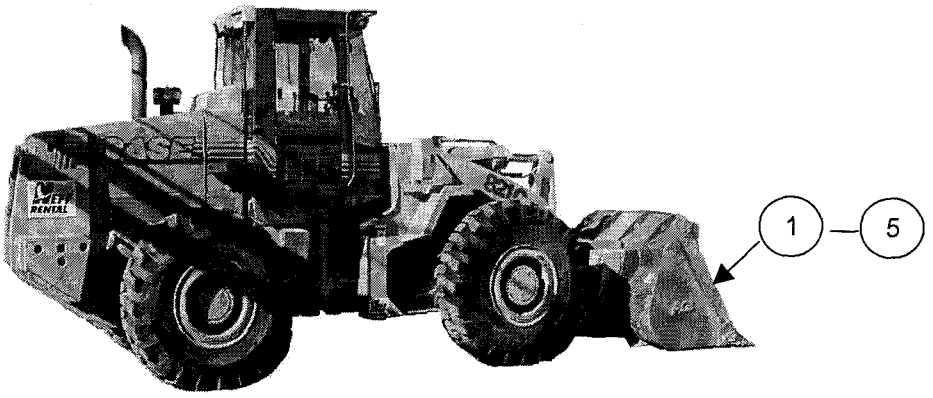

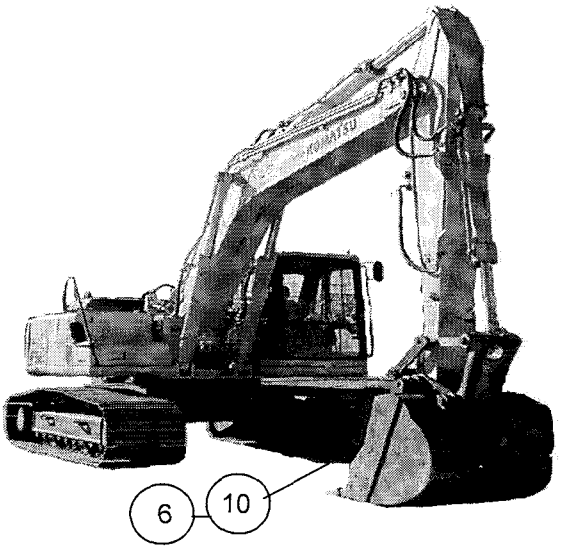

360

ROCKY FLATS ENVIRONMENTAL TECHNOLOGY SITE

INSTRUMENT DATA

Mfg.	Eberline	Mfg.	Eberline	Mfg.	NE Electra
Model	SAC-4	Model	BC-4	Model	DP-6
Serial #	959	Serial #	702	Serial #	3110
Cal Due	1/18/02	Cal Due	7/22/03	Cal Due	11/29/02
Bkg	0.2 cpmα	Bkg	33 cpmβ	Bkg	4 cpmα
Eff.	33 %	Eff.	25 %	Eff.	22 %
MDA	20 dpmα	MDA	200 dpmβ	MDA	55 dpmα

Mfg.	Eberline	Mfg.	Eberline	Mfg.	NE Electra
Model	SAC-4	Model	BC-4	Model	DP-6
Serial #	NA	Serial #	NA	Serial #	3110
Cal Due		Cal Due		Cal Due	11/29/02
Bkg	cpmα	Bkg	cpmβ	Bkg	447 cpmβ
Eff.	%	Eff.	%	Eff.	32.5 %
MDA	NA dpmα	MDA	NA dpmβ	MDA	311 dpmβ

Survey Type: Contamination
Building: Solar Ponds
Location: Northwest of solar ponds
Purpose: Survey after loading

RWP #: 02-RISS-026

Date: 11/22/02 Time: 1515

[redacted]

RCT: NA / NA / NA
Print name Signature Emp. #

PRN/REN # : NA
Comments: Intermodal containers GFLU-001007, GFLU-001126, BFLU-000247 surveyed after being filled with C pond sludge

SURVEY RESULTS

Swipe #	LOCATION	ALPHA Swipe dpm/100cm2	ALPHA Direct dpm/100cm2	ALPHA Wipe dpm/wipe	BETA Swipe dpm/100cm2	BETA Direct dpm/100cm2	BETA Wipe dpm/wipe
1	See map	< 20	< 55	NA	< 200	< 311	NA
2	See map	< 20	< 55		< 200	< 311	
3	See map	< 20	< 55		< 200	< 311	
4	See map	< 20	< 55		< 200	< 311	
5	See map	< 20	< 55		< 200	< 311	
6	See map	< 20	< 55		< 200	< 311	
7	See map	< 20	< 55		< 200	< 311	
8	See map	< 20	< 55		< 200	< 311	
9	See map	< 20	< 55		< 200	< 311	
10	See map	< 20	< 55		< 200	< 311	
NA	NA	NA	NA		NA		
NA	NA	NA	NA	NA	NA	NA	NA

Date Reviewed: 12902 **RS Supervision:** [redacted]
Print Name Signature

251

Drawing Showing Survey Points

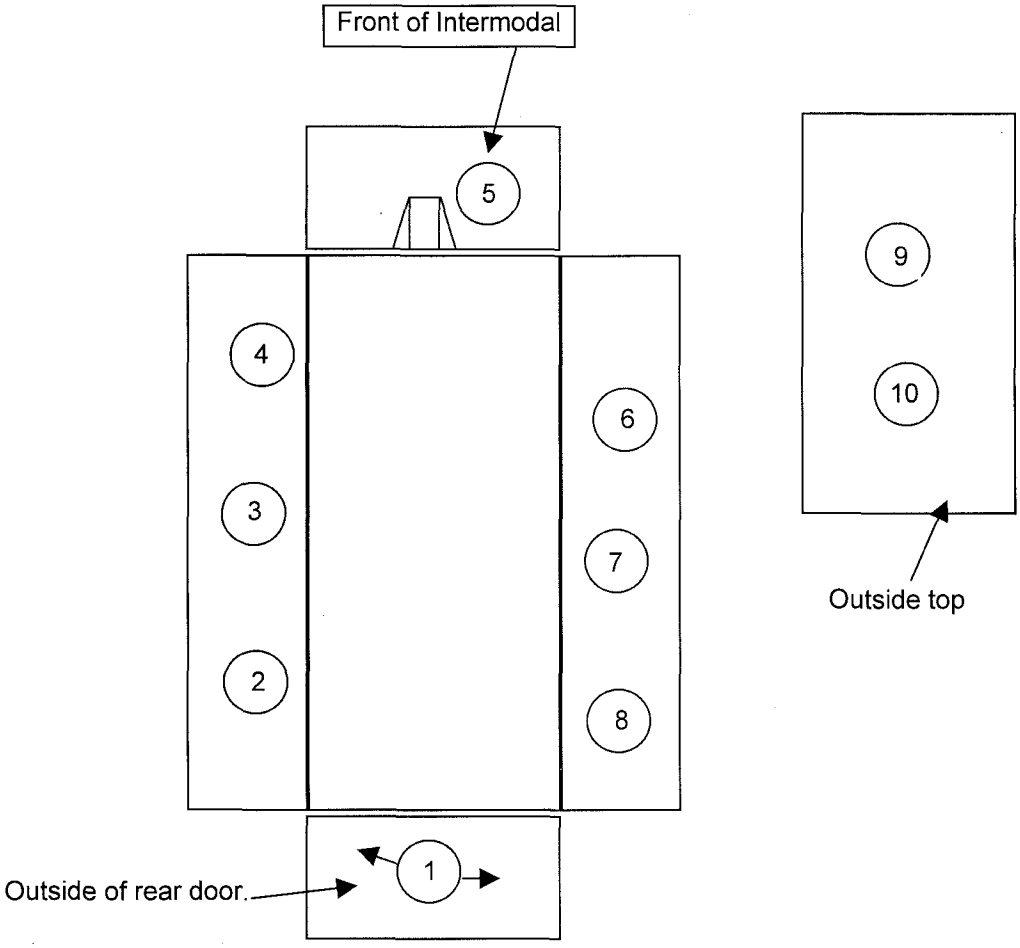

Typical survey performed on Intermodals GFLU-001007, GFLU-001126, BFLU-000247

252

ROCKY FLATS ENVIRONMENTAL TECHNOLOGY SITE

INSTRUMENT DATA

Mfg.	Eberline	Mfg.	Eberline	Mfg.	NE Electra
Model	SAC-4	Model	BC-4	Model	DP-6
Serial #	NA	Serial #	NA	Serial #	1445
Cal Due	NA	Cal Due	NA	Cal Due	5/7/03
Bkg	NA cpmα	Bkg	NA cpmβ	Bkg	13 cpmα
Eff.	33 %	Eff.	25 %	Eff.	22.3 %
MDA	20 dpmα	MDA	200 dpmβ	MDA	87 dpmα
Mfg.	Eberline	Mfg.	Eberline	Mfg.	NE Electra
Model	SAC-4	Model	BC-4	Model	DP-6
Serial #	NA	Serial #	NA	Serial #	1445
Cal Due	NA	Cal Due	NA	Cal Due	5/7/03
Bkg	NA cpmα	Bkg	NA cpmβ	Bkg	802 cpmβ
Eff.	33 %	Eff.	25 %	Eff.	33.6 %
MDA	20 dpmα	MDA	200 dpmβ	MDA	400 dpmβ

Survey Type: Contamination
Building: Solar Ponds
Location: Solar Ponds
Purpose: Berm baseline prior to peeling

RWP #: 02-RISS-026

Date: 11/20/02 Time: 1400

[redacted]

RCT: NA / NA / NA
Print name / Signature / Emp. #

PRN/REN # :

Comments: Survey consisted of gross area wipes, followed by 1-minute pat surveys. Area wipes approximately 2 m^2 in area.

SURVEY RESULTS

Swipe #	LOCATION	ALPHA Swipe dpm/100cm2	ALPHA Direct dpm/100cm2	ALPHA Wipe dpm/wipe	BETA Swipe dpm/100cm2	BETA Direct dpm/100cm2	BETA Wipe dpm/wipe
1	see survey map	NA	126	<87	NA	<400	<400
2	see survey map		99	<87		<400	<400
3	see survey map		<87	<87		<400	<400
4	see survey map		90	<87		<400	<400
5	see survey map		<87	<87		<400	<400
6	see survey map		108	<87		<400	<400
7	see survey map		<87	<87		<400	<400
8	see survey map		<87	<87		<400	<400
9	see survey map		<87	<87		<400	<400
10	see survey map		<87	<87		<400	<400
11	see survey map		<87	<87		<400	<400
12	see survey map		188	<87		<400	<400
13	see survey map		287	<87		<400	<400
14	see survey map		628	<87		<400	<400
15	see survey map		<87	<87		<400	<400
16	see survey map		117	<87		<400	<400
17	see survey map		<87	<87		<400	<400
18	see survey map		<87	<87		<400	<400
19	see survey map	▼	<87	<87	▼	<400	<400
20	see survey map	NA	<87	<87	NA	<400	<400

Date Reviewed: 11-28-02 **RS Supervision:** [redacted]
Print Name / Signature

ROCKY FLATS ENVIRONMENTAL TECHNOLOGY SITE

SURVEY RESULTS

Swipe #	LOCATION	ALPHA Swipe dpm/100cm2	ALPHA Direct dpm/100cm2	ALPHA Wipe dpm/wipe	BETA Swipe dpm/100cm2	BETA Direct dpm/100cm2	BETA Wipe dpm/wipe
21	see survey map	NA	<87	<87	NA	<400	<400
22	see survey map		90	<87		<400	<400
23	see survey map		<87	<87		<400	<400
24	see survey map		90	<87		<400	<400
25	see survey map		<87	<87		<400	<400
26	see survey map		<87	<87		<400	<400
27	see survey map		<87	<87		<400	<400
28	see survey map		404	<87		452	<400
29	see survey map		<87	<87		<400	<400
30	see survey map		126	<87		<400	<400
31	see survey map		<87	<87		<400	<400
32	see survey map		<87	<87		<400	<400
33	see survey map		<87	<87		<400	<400
34	see survey map		<87	<87		536	<400
35	see survey map		<87	<87		<400	<400
36	see survey map		<87	<87		<400	<400
37	see survey map		<87	<87		<400	<400
38	see survey map		<87	<87		<400	<400
39	see survey map		<87	<87		<400	<400
40	see survey map		<87	<87		<400	<400
41	see survey map		<87	<87		<400	<400
42	see survey map		<87	<87		<400	<400
43	see survey map		<87	<87		<400	<400
44	see survey map		<87	<87		<400	<400
45	see survey map		<87	<87		<400	<400
46	see survey map		126	<87		<400	<400
47	see survey map		<87	<87		<400	<400
48	see survey map		<87	<87		<400	<400
49	see survey map		<87	<87		<400	<400
50	see survey map		<87	<87		<400	<400
51	see survey map		<87	<87		<400	<400
52	see survey map		<87	<87		<400	<400
53	see survey map		<87	<87		<400	<400
54	see survey map		<87	<87		<400	<400
55	see survey map		<87	<87		<400	<400
56	see survey map		<87	<87		482	<400
57	see survey map		<87	<87		<400	<400
58	see survey map		<87	<87		<400	<400
59	see survey map		<87	<87		<400	<400
60	see survey map		<87	<87		<400	<400
61	see survey map		<87	<87		<400	<400
62	see survey map		<87	<87		<400	<400
63	see survey map	▼	<87	<87	▼	<400	<400
64	see survey map	NA	<87	<87	NA	<400	<400

254

SURVEY RESULTS

Swipe #	LOCATION	ALPHA Swipe dpm/100cm2	ALPHA Direct dpm/100cm2	ALPHA Wipe dpm/wipe	BETA Swipe dpm/100cm2	BETA Direct dpm/100cm2	BETA Wipe dpm/wipe
65	see survey map	NA	<87	<87	NA	<400	<400
66	see survey map		<87	<87		<400	<400
67	see survey map		<87	<87		<400	<400
68	see survey map		<87	<87		<400	<400
69	see survey map		<87	<87		<400	<400
70	see survey map		<87	<87		<400	<400
71	see survey map		<87	<87		<400	<400
72	see survey map		<87	<87		<400	<400
73	see survey map		<87	<87		<400	<400
74	see survey map		<87	<87		<400	<400
75	see survey map		<87	<87		<400	<400
NA	NA		NA	NA		NA	NA
NA	NA	NA	NA	NA	NA	NA	NA

ROCKY FLATS ENVIRONMENTAL TECHNOLOGY SITE

Drawing Showing Survey Points

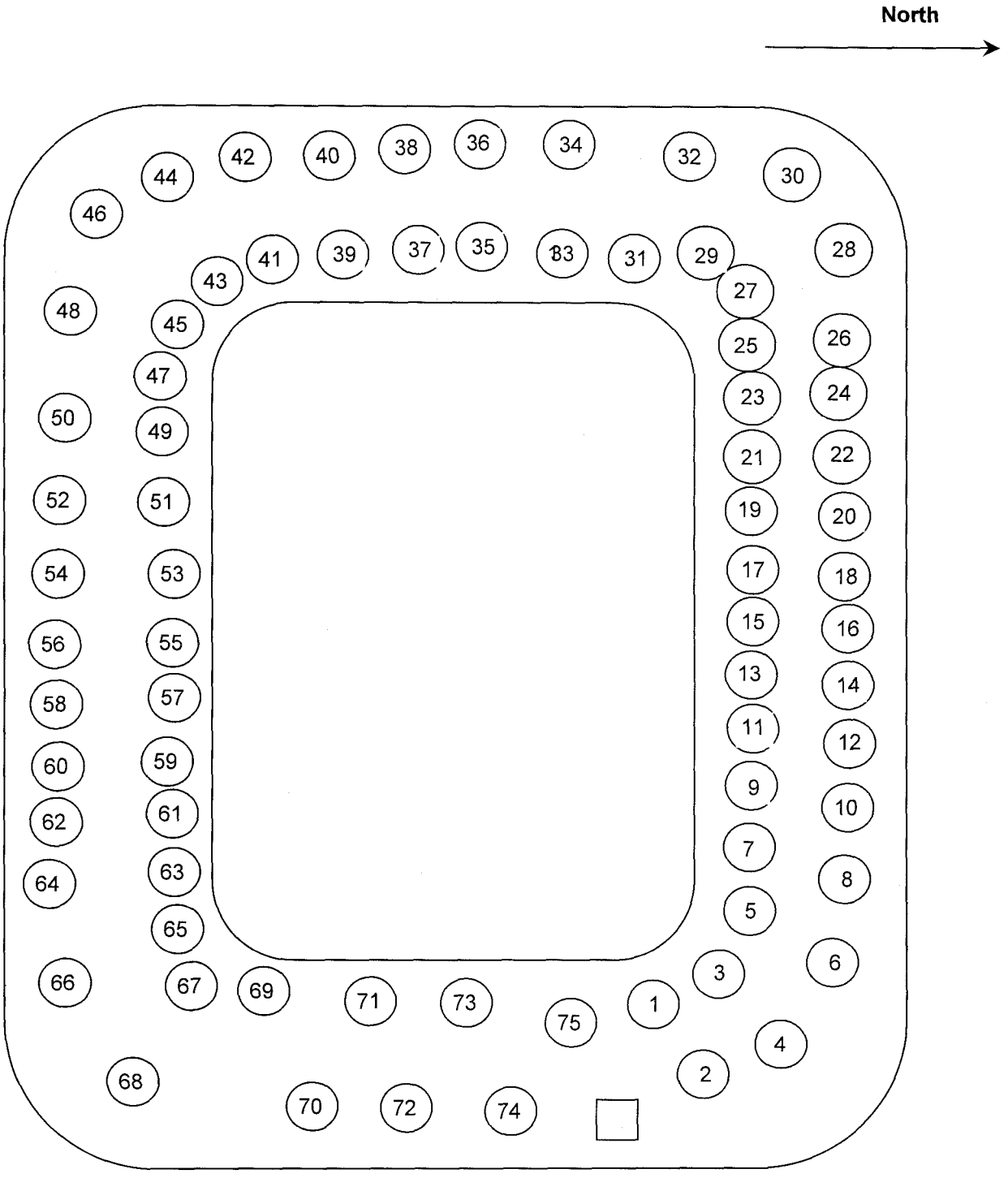

256

RADIOACTIVE MATERIAL (RAM) PACKAGE SURVEY FORM

Location:	East of B solar ponds	Date:	11/20/02	Time:	1430

RWP # 02- RISS- 026

Survey Instrument Data:

Mfg:	Bicron	Eberline	Eberline	NA	NA
Model:	Microrem	SAC-4	BC-4	NA	NA
Serial #:	B891M	883	911	NA	NA
Cal Due Date:	1/28/03	2/28/03	10/30/03	NA	NA
Background:	< 0.1mrem/hr.	0 cpm	31.9 cpm	NA	NA
Efficiency:	NA	33%	25%	NA	NA
MDA	0.017 mrem/hr	20 dpm	200 dpm	NA	NA

Reason for Survey: Pre shipping to envirocare

Contamination (dpm/300 cm2)					**Radiation (mrem/hr)**						
Swipe #	Removable		Total		Package Exterior Contact and @ 1m						
	Alpha	Beta/Gamma	Alpha	Beta/Gamma		β/γ		Neutron		Total	
						Cont.	@1m	Cont.	@1m	Cont.	@1m
1	< 20	< 200	NA	NA	1	< 0.017	< 0.017	0	0	< 0.017	< 0.017
2	< 20	< 200	NA	NA	2	< 0.017	< 0.017	0	0	< 0.017	< 0.017
3	< 20	< 200	NA	NA	3	< 0.017	< 0.017	0	0	< 0.017	< 0.017
4	< 20	< 200	NA	NA	4	< 0.017	< 0.017	0	0	< 0.017	< 0.017
5	< 20	< 200	NA	NA	5	< 0.017	< 0.017	0	0	< 0.017	< 0.017
6	< 20	< 200	NA	NA	6	< 0.017	< 0.017	0	0	< 0.017	< 0.017
7	< 20	< 200	NA	NA	7	< 0.017	< 0.017	NA	NA	< 0.017	< 0.017
8	< 20	< 200	NA	NA	8	< 0.017	< 0.017	NA	NA	< 0.017	< 0.017
NA	NA	NA	NA	NA	NA	NA	NA	NA	NA	NA	NA
NA	NA	NA	NA	NA	NA	NA	NA	NA	NA	NA	NA
NA	NA	NA	NA	NA	NA	NA	NA	NA	NA	NA	NA
NA	NA	NA	NA	NA	NA	NA	NA	NA	NA	NA	NA

***Drawing Showing Survey Points**

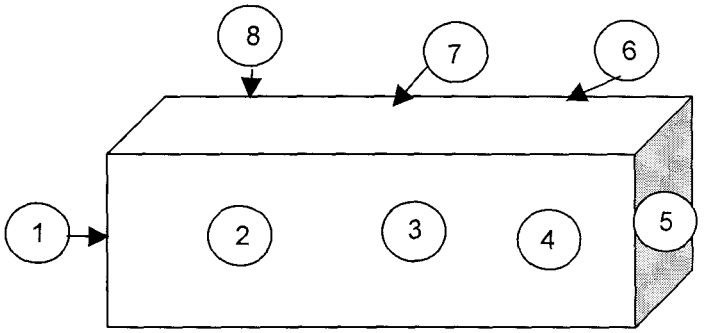

This survey is of the Intermodals that are ready to be shippedfrom the solar ponds. The WEMS numbers is L00891.

NOTE: Radiation readings are the highest for each distinct plane.

Performed by:	M. Simmers	M. Simmers	[redacted]	11/20/02
Name (Print)		Signature		Date
Approved by: RS Supervision:				11-21-02
Name (Print)		Signature		Date

RADIOACTIVE MATERIAL (RAM) PACKAGE SURVEY FORM

Location:	East of B solar ponds	Date:	11/20/02	Time:	1430

RWP # 02- RISS- 026

Survey Instrument Data:

Mfg:	Bicron	Eberline	Eberline	NA	NA
Model:	Microrem	SAC-4	BC-4	NA	NA
Serial #:	B891M	883	911	NA	NA
Cal Due Date:	1/28/03	2/28/03	10/30/03	NA	NA
Background:	< 0.1mrem/hr.	0 cpm	31.9 cpm	NA	NA
Efficiency:	NA	33%	25%	NA	NA
MDA	0.017 mrem/hr	20 dpm	200 dpm	NA	NA

Reason for Survey: Pre shipping to envirocare

Contamination (dpm/300 cm2)					Radiation (mrem/hr)						
Swipe #	Removable		Total		Package Exterior Contact and @ 1m						
	Alpha	Beta/Gamma	Alpha	Beta/Gamma		β/γ		Neutron		Total	
						Cont.	@1m	Cont.	@1m	Cont.	@1m
1	< 20	< 200	NA	NA	1	< 0.017	< 0.017	0	0	< 0.017	< 0.017
2	< 20	< 200	NA	NA	2	< 0.017	< 0.017	0	0	< 0.017	< 0.017
3	< 20	< 200	NA	NA	3	< 0.017	< 0.017	0	0	< 0.017	< 0.017
4	< 20	< 200	NA	NA	4	< 0.017	< 0.017	0	0	< 0.017	< 0.017
5	< 20	< 200	NA	NA	5	< 0.017	< 0.017	0	0	< 0.017	< 0.017
6	< 20	< 200	NA	NA	6	< 0.017	< 0.017	0	0	< 0.017	< 0.017
7	< 20	< 200	NA	NA	7	< 0.017	< 0.017	NA	NA	< 0.017	< 0.017
8	< 20	< 200	NA	NA	8	< 0.017	< 0.017	NA	NA	< 0.017	< 0.017
NA	NA	NA	NA	NA	NA	NA	NA	NA	NA	NA	NA
NA	NA	NA	NA	NA	NA	NA	NA	NA	NA	NA	NA
NA	NA	NA	NA	NA	NA	NA	NA	NA	NA	NA	NA
NA	NA	NA	NA	NA	NA	NA	NA	NA	NA	NA	NA

***Drawing Showing Survey Points**

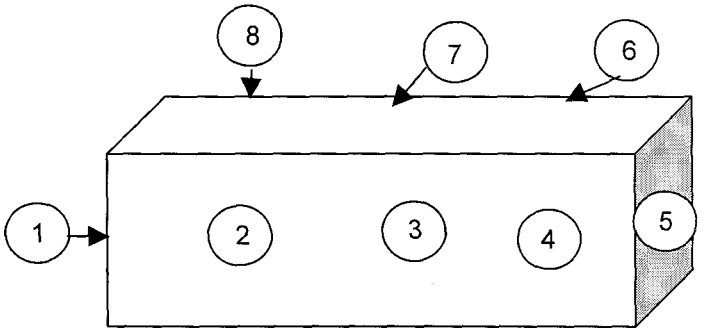

This survey is of the Intermodals that are ready to be shippedfrom the solar ponds. The WEMS numbers is L00889.

NOTE: Radiation readings are the highest for each distinct plane.

Performed by:	M. Simmers	M. Simmers	[redacted]	11/20/02
Name (Print)		Signature		Date
Approved by: RS Supervision:	Supervisor	/		11/21-02
Name (Print)		Signature		Date

RADIOACTIVE MATERIAL (RAM) PACKAGE SURVEY FORM

Location:	East of B solar ponds	Date:	11/20/02	Time:	1430

RWP # 02- RISS- 026

Survey Instrument Data:

Mfg:	Bicron	Eberline	Eberline	NA	NA
Model:	Microrem	SAC-4	BC-4	NA	NA
Serial #:	B891M	883	911	NA	NA
Cal Due Date:	1/28/03	2/28/03	10/30/03	NA	NA
Background:	< 0.1mrem/hr.	0 cpm	31.9 cpm	NA	NA
Efficiency:	NA	33%	25%	NA	NA
MDA	0.017 mrem/hr	20 dpm	200 dpm	NA	NA

Reason for Survey: Pre shipping to envirocare

Contamination (dpm/300 cm2)					**Radiation (mrem/hr)**						
Swipe #	Removable		Total		Package Exterior Contact and @ 1m						
	Alpha	Beta/Gamma	Alpha	Beta/Gamma		β/γ		Neutron		Total	
						Cont.	@1m	Cont.	@1m	Cont.	@1m
1	< 20	< 200	NA	NA	1	< 0.017	< 0.017	0	0	< 0.017	< 0.017
2	< 20	< 200	NA	NA	2	< 0.017	< 0.017	0	0	< 0.017	< 0.017
3	< 20	< 200	NA	NA	3	< 0.017	< 0.017	0	0	< 0.017	< 0.017
4	< 20	< 200	NA	NA	4	< 0.017	< 0.017	0	0	< 0.017	< 0.017
5	< 20	< 200	NA	NA	5	< 0.017	< 0.017	0	0	< 0.017	< 0.017
6	< 20	< 200	NA	NA	6	< 0.017	< 0.017	0	0	< 0.017	< 0.017
7	< 20	< 200	NA	NA	7	< 0.017	< 0.017	NA	NA	< 0.017	< 0.017
8	< 20	< 200	NA	NA	8	< 0.017	< 0.017	NA	NA	< 0.017	< 0.017
NA	NA	NA	NA	NA	NA	NA	NA	NA	NA	NA	NA
NA	NA	NA	NA	NA	NA	NA	NA	NA	NA	NA	NA
NA	NA	NA	NA	NA	NA	NA	NA	NA	NA	NA	NA
NA	NA	NA	NA	NA	NA	NA	NA	NA	NA	NA	NA

***Drawing Showing Survey Points**

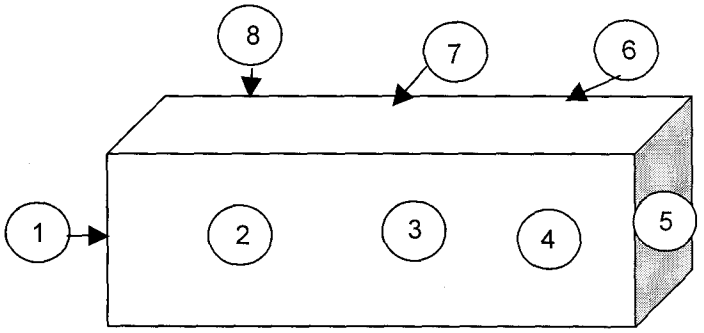

This survey is of the Intermodals that are ready to be shippedfrom the solar ponds. The WEMS numbers is L00890.

NOTE: Radiation readings are the highest for each distinct plane.

Performed by:	M. Simmers	M. Simmers	[redacted]	11/20/02
Name (Print)		Signature		Date
Approved by:				
RS Supervision:	[illegible]	[illegible]		11-21-02
Name (Print)		Signature		Date

259

RADIOACTIVE MATERIAL (RAM) PACKAGE SURVEY FORM

Location:	East of B solar ponds	Date:	11/20/02	Time:	1430

RWP # 02- RISS- 026

Survey Instrument Data:

Mfg:	Bicron	Eberline	Eberline	NA	NA
Model:	Microrem	SAC-4	BC-4	NA	NA
Serial #:	B891M	883	911	NA	NA
Cal Due Date:	1/28/03	2/28/03	10/30/03	NA	NA
Background:	< 0.1mrem/hr.	0 cpm	31.9 cpm	NA	NA
Efficiency:	NA	33%	25%	NA	NA
MDA	0.017 mrem/hr	20 dpm	200 dpm	NA	NA

Reason for Survey: Pre shipping to envirocare

Contamination (dpm/300 cm2)					**Radiation (mrem/hr)**						
Swipe #	Removable		Total		Package Exterior Contact and @ 1m						
	Alpha	Beta/Gamma	Alpha	Beta/Gamma		β/γ		Neutron		Total	
						Cont.	@1m	Cont.	@1m	Cont.	@1m
1	< 20	< 200	NA	NA	1	< 0.017	< 0.017	0	0	< 0.017	< 0.017
2	< 20	< 200	NA	NA	2	< 0.017	< 0.017	0	0	< 0.017	< 0.017
3	< 20	< 200	NA	NA	3	< 0.017	< 0.017	0	0	< 0.017	< 0.017
4	< 20	< 200	NA	NA	4	< 0.017	< 0.017	0	0	< 0.017	< 0.017
5	< 20	< 200	NA	NA	5	< 0.017	< 0.017	0	0	< 0.017	< 0.017
6	< 20	< 200	NA	NA	6	< 0.017	< 0.017	0	0	< 0.017	< 0.017
7	< 20	< 200	NA	NA	7	< 0.017	< 0.017	NA	NA	< 0.017	< 0.017
8	< 20	< 200	NA	NA	8	< 0.017	< 0.017	NA	NA	< 0.017	< 0.017
NA	NA	NA	NA	NA	NA	NA	NA	NA	NA	NA	NA
NA	NA	NA	NA	NA	NA	NA	NA	NA	NA	NA	NA
NA	NA	NA	NA	NA	NA	NA	NA	NA	NA	NA	NA
NA	NA	NA	NA	NA	NA	NA	NA	NA	NA	NA	NA

***Drawing Showing Survey Points**

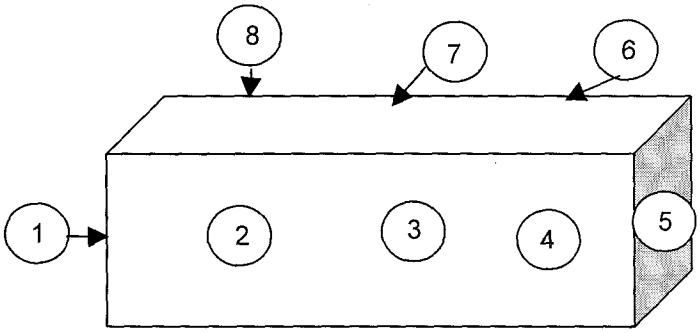

This survey is of the Intermodals that are ready to be shippedfrom the solar ponds. The WEMS numbers is L00887.

NOTE: Radiation readings are the highest for each distinct plane.

Performed by:	M. Simmers	M. Simmers	[redacted]	/ 11/20/02
Name (Print)		Signature		Date
Approved by: RS Supervision:	[illegible]	/ [illegible]	[redacted]	11-21-02
Name (Print)		Signature		Date

240

RADIOACTIVE MATERIAL (RAM) PACKAGE SURVEY FORM

Location:	East of B solar ponds	Date:	11/20/02	Time:	1430
RWP # 02- RISS- 026					

Survey Instrument Data:

Mfg:	Bicron	Eberline	Eberline	NA	NA
Model:	Microrem	SAC-4	BC-4	NA	NA
Serial #:	B891M	883	911	NA	NA
Cal Due Date:	1/28/03	2/28/03	10/30/03	NA	NA
Background:	< 0.1mrem/hr.	0 cpm	31.9 cpm	NA	NA
Efficiency:	NA	33%	25%	NA	NA
MDA	0.017 mrem/hr	20 dpm	200 dpm	NA	NA

Reason for Survey: Pre shipping to envirocare

Contamination (dpm/300 cm2)					Radiation (mrem/hr)						
Swipe #	Removable		Total		Package Exterior Contact and @ 1m						
	Alpha	Beta/Gamma	Alpha	Beta/Gamma		β/γ		Neutron		Total	
						Cont.	@1m	Cont.	@1m	Cont.	@1m
1	< 20	< 200	NA	NA	1	< 0.017	< 0.017	0	0	< 0.017	< 0.017
2	< 20	< 200	NA	NA	2	< 0.017	< 0.017	0	0	< 0.017	< 0.017
3	< 20	< 200	NA	NA	3	< 0.017	< 0.017	0	0	< 0.017	< 0.017
4	< 20	< 200	NA	NA	4	< 0.017	< 0.017	0	0	< 0.017	< 0.017
5	< 20	< 200	NA	NA	5	< 0.017	< 0.017	0	0	< 0.017	< 0.017
6	< 20	< 200	NA	NA	6	< 0.017	< 0.017	0	0	< 0.017	< 0.017
7	< 20	< 200	NA	NA	7	< 0.017	< 0.017	NA	NA	< 0.017	< 0.017
8	< 20	< 200	NA	NA	8	< 0.017	< 0.017	NA	NA	< 0.017	< 0.017
NA	NA	NA	NA	NA	NA	NA	NA	NA	NA	NA	NA
NA	NA	NA	NA	NA	NA	NA	NA	NA	NA	NA	NA
NA	NA	NA	NA	NA	NA	NA	NA	NA	NA	NA	NA
NA	NA	NA	NA	NA	NA	NA	NA	NA	NA	NA	NA

***Drawing Showing Survey Points**

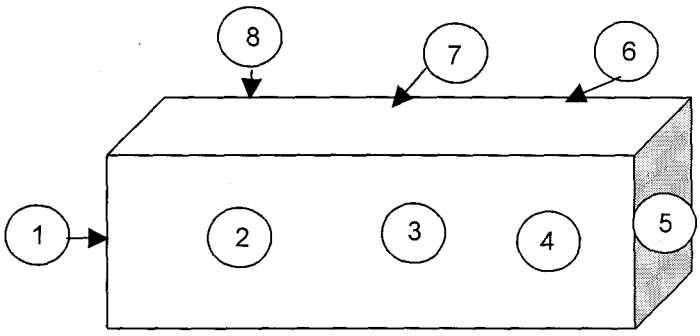

This survey is of the Intermodals that are ready to be shippedfrom the solar ponds. The WEMS numbers is L00873.

NOTE: Radiation readings are the highest for each distinct plane.

Performed by:	M. Simmers	M. Simmers	[redacted]	/ 11/20/02
Name (Print)		Signature		Date
Approved by: RS Supervision:	[signature]	/ [signature]		11-21-02
Name (Print)		Signature		Date

261

RADIOACTIVE MATERIAL (RAM) PACKAGE SURVEY FORM

Location:	East of B solar ponds	Date:	11/20/02	Time:	1430

RWP # 02- RISS- 026

Survey Instrument Data:

Mfg:	Bicron	Eberline	Eberline	NA	NA
Model:	Microrem	SAC-4	BC-4	NA	NA
Serial #:	B891M	883	911	NA	NA
Cal Due Date:	1/28/03	2/28/03	10/30/03	NA	NA
Background:	< 0.1mrem/hr.	0 cpm	31.9 cpm	NA	NA
Efficiency:	NA	33%	25%	NA	NA
MDA	0.017 mrem/hr	20 dpm	200 dpm	NA	NA

Reason for Survey: Pre shipping to envirocare

Contamination (dpm/300 cm2)					**Radiation (mrem/hr)**						
Swipe #	Removable		Total		Package Exterior Contact and @ 1m						
	Alpha	Beta/Gamma	Alpha	Beta/Gamma		β/γ		Neutron		Total	
						Cont.	@1m	Cont.	@1m	Cont.	@1m
1	< 20	< 200	NA	NA	1	< 0.017	< 0.017	0	0	< 0.017	< 0.017
2	< 20	< 200	NA	NA	2	< 0.017	< 0.017	0	0	< 0.017	< 0.017
3	< 20	< 200	NA	NA	3	< 0.017	< 0.017	0	0	< 0.017	< 0.017
4	< 20	< 200	NA	NA	4	< 0.017	< 0.017	0	0	< 0.017	< 0.017
5	< 20	< 200	NA	NA	5	< 0.017	< 0.017	0	0	< 0.017	< 0.017
6	< 20	< 200	NA	NA	6	< 0.017	< 0.017	0	0	< 0.017	< 0.017
7	< 20	< 200	NA	NA	7	< 0.017	< 0.017	NA	NA	< 0.017	< 0.017
8	< 20	< 200	NA	NA	8	< 0.017	< 0.017	NA	NA	< 0.017	< 0.017
NA	NA	NA	NA	NA	NA	NA	NA	NA	NA	NA	NA
NA	NA	NA	NA	NA	NA	NA	NA	NA	NA	NA	NA
NA	NA	NA	NA	NA	NA	NA	NA	NA	NA	NA	NA
NA	NA	NA	NA	NA	NA	NA	NA	NA	NA	NA	NA

***Drawing Showing Survey Points**

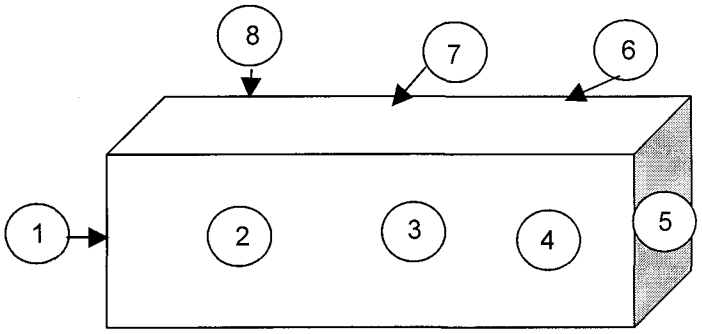

This survey is of the Intermodals that are ready to be shippedfrom the solar ponds. The WEMS numbers is L00883.

NOTE: Radiation readings are the highest for each distinct plane.

Performed by:	M. Simmers	M. Simmers	[redacted]	/ 11/20/02
Name (Print)		Signature		Date
Approved by: RS Supervision:		/		11-21-02
Name (Print)		Signature		Date

RADIOACTIVE MATERIAL (RAM) PACKAGE SURVEY FORM

Location:	East of B solar ponds	Date:	11/20/02	Time:	1430

RWP # 02- RISS- 026

Survey Instrument Data:

Mfg:	Bicron	Eberline	Eberline	NA	NA
Model:	Microrem	SAC-4	BC-4	NA	NA
Serial #:	B891M	883	911	NA	NA
Cal Due Date:	1/28/03	2/28/03	10/30/03	NA	NA
Background:	< 0.1mrem/hr.	0 cpm	31.9 cpm	NA	NA
Efficiency:	NA	33%	25%	NA	NA
MDA	0.017 mrem/hr	20 dpm	200 dpm	NA	NA

Reason for Survey: Pre shipping to envirocare

Contamination (dpm/300 cm2)					**Radiation (mrem/hr)**						
Swipe #	Removable		Total		Package Exterior Contact and @ 1m						
	Alpha	Beta/Gamma	Alpha	Beta/Gamma		β/γ		Neutron		Total	
						Cont.	@1m	Cont.	@1m	Cont.	@1m
1	< 20	< 200	NA	NA	1	< 0.017	< 0.017	0	0	< 0.017	< 0.017
2	< 20	< 200	NA	NA	2	< 0.017	< 0.017	0	0	< 0.017	< 0.017
3	< 20	< 200	NA	NA	3	< 0.017	< 0.017	0	0	< 0.017	< 0.017
4	< 20	< 200	NA	NA	4	< 0.017	< 0.017	0	0	< 0.017	< 0.017
5	< 20	< 200	NA	NA	5	< 0.017	< 0.017	0	0	< 0.017	< 0.017
6	< 20	< 200	NA	NA	6	< 0.017	< 0.017	0	0	< 0.017	< 0.017
7	< 20	< 200	NA	NA	7	< 0.017	< 0.017	NA	NA	< 0.017	< 0.017
8	< 20	< 200	NA	NA	8	< 0.017	< 0.017	NA	NA	< 0.017	< 0.017
NA	NA	NA	NA	NA	NA	NA	NA	NA	NA	NA	NA
NA	NA	NA	NA	NA	NA	NA	NA	NA	NA	NA	NA
NA	NA	NA	NA	NA	NA	NA	NA	NA	NA	NA	NA
NA	NA	NA	NA	NA	NA	NA	NA	NA	NA	NA	NA

***Drawing Showing Survey Points**

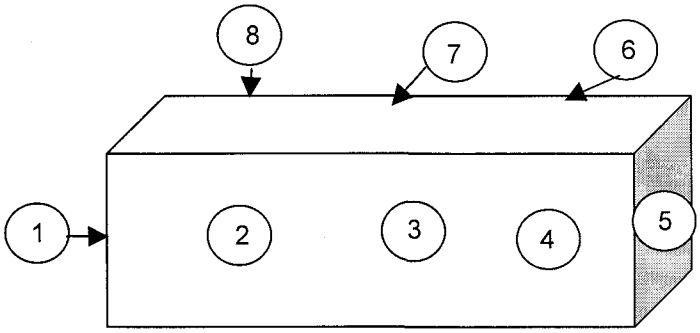

This survey is of the Intermodals that are ready to be shippedfrom the solar ponds. The WEMS numbers is L00871.

NOTE: Radiation readings are the highest for each distinct plane.

Performed by:	M. Simmers	M. Simmers	[redacted]	/ 11/20/02
Name (Print)		Signature		Date
Approved by: RS Supervision:	Signature	/		11-21-02
Name (Print)		Signature		Date

RADIOACTIVE MATERIAL (RAM) PACKAGE SURVEY FORM

Location:	East of B solar ponds	Date:	11/20/02	Time:	1430

RWP # 02- RISS- 026

Survey Instrument Data:

Mfg:	Bicron	Eberline	Eberline	NA	NA
Model:	Microrem	SAC-4	BC-4	NA	NA
Serial #:	B891M	883	911	NA	NA
Cal Due Date:	1/28/03	2/28/03	10/30/03	NA	NA
Background:	< 0.1mrem/hr.	0 cpm	31.9 cpm	NA	NA
Efficiency:	NA	33%	25%	NA	NA
MDA	0.017 mrem/hr	20 dpm	200 dpm	NA	NA

Reason for Survey: Pre shipping to envirocare

Contamination (dpm/300 cm2)					**Radiation (mrem/hr)**						
Swipe #	Removable		Total		Package Exterior Contact and @ 1m						
	Alpha	Beta/Gamma	Alpha	Beta/Gamma		β/γ		Neutron		Total	
						Cont.	@1m	Cont.	@1m	Cont.	@1m
1	< 20	< 200	NA	NA	1	< 0.017	< 0.017	0	0	< 0.017	< 0.017
2	< 20	< 200	NA	NA	2	< 0.017	< 0.017	0	0	< 0.017	< 0.017
3	< 20	< 200	NA	NA	3	< 0.017	< 0.017	0	0	< 0.017	< 0.017
4	< 20	< 200	NA	NA	4	< 0.017	< 0.017	0	0	< 0.017	< 0.017
5	< 20	< 200	NA	NA	5	< 0.017	< 0.017	0	0	< 0.017	< 0.017
6	< 20	< 200	NA	NA	6	< 0.017	< 0.017	0	0	< 0.017	< 0.017
7	< 20	< 200	NA	NA	7	< 0.017	< 0.017	NA	NA	< 0.017	< 0.017
8	< 20	< 200	NA	NA	8	< 0.017	< 0.017	NA	NA	< 0.017	< 0.017
NA	NA	NA	NA	NA	NA	NA	NA	NA	NA	NA	NA
NA	NA	NA	NA	NA	NA	NA	NA	NA	NA	NA	NA
NA	NA	NA	NA	NA	NA	NA	NA	NA	NA	NA	NA
NA	NA	NA	NA	NA	NA	NA	NA	NA	NA	NA	NA

***Drawing Showing Survey Points**

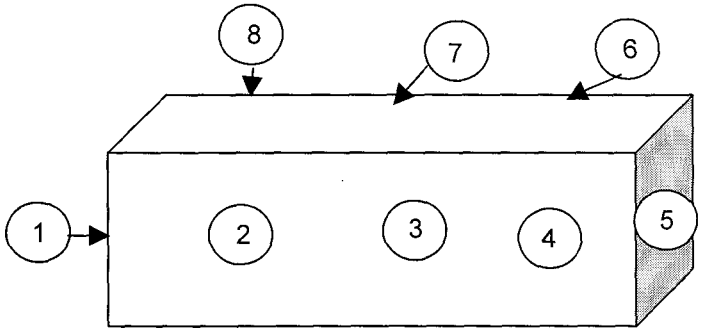

This survey is of the Intermodals that are ready to be shippedfrom the solar ponds. The WEMS numbers is L00872.

NOTE: Radiation readings are the highest for each distinct plane.

Performed by:	M. Simmers	M. Simmers /	[redacted] /	11/20/02
	Name (Print)	Signature		Date
Approved by: RS Supervision:	Sloan	/	/	11-21-02
	Name (Print)	Signature		Date

RADIOACTIVE MATERIAL (RAM) PACKAGE SURVEY FORM

Location:	East of B solar ponds	Date:	11/20/02	Time:	1430

RWP # 02- RISS- 026

Survey Instrument Data:

Mfg:	Bicron	Eberline	Eberline	NA	NA
Model:	Microrem	SAC-4	BC-4	NA	NA
Serial #:	B891M	883	911	NA	NA
Cal Due Date:	1/28/03	2/28/03	10/30/03	NA	NA
Background:	< 0.1mrem/hr.	0 cpm	31.9 cpm	NA	NA
Efficiency:	NA	33%	25%	NA	NA
MDA	0.017 mrem/hr	20 dpm	200 dpm	NA	NA

Reason for Survey: Pre shipping to envirocare

Contamination (dpm/300 cm2)					**Radiation (mrem/hr)**						
Swipe #	Removable		Total		Package Exterior Contact and @ 1m						
	Alpha	Beta/Gamma	Alpha	Beta/Gamma		β/γ		Neutron		Total	
						Cont.	@1m	Cont.	@1m	Cont.	@1m
1	< 20	< 200	NA	NA	1	< 0.017	< 0.017	0	0	< 0.017	< 0.017
2	< 20	< 200	NA	NA	2	< 0.017	< 0.017	0	0	< 0.017	< 0.017
3	< 20	< 200	NA	NA	3	< 0.017	< 0.017	0	0	< 0.017	< 0.017
4	< 20	< 200	NA	NA	4	< 0.017	< 0.017	0	0	< 0.017	< 0.017
5	< 20	< 200	NA	NA	5	< 0.017	< 0.017	0	0	< 0.017	< 0.017
6	< 20	< 200	NA	NA	6	< 0.017	< 0.017	0	0	< 0.017	< 0.017
7	< 20	< 200	NA	NA	7	< 0.017	< 0.017	NA	NA	< 0.017	< 0.017
8	< 20	< 200	NA	NA	8	< 0.017	< 0.017	NA	NA	< 0.017	< 0.017
NA	NA	NA	NA	NA	NA	NA	NA	NA	NA	NA	NA
NA	NA	NA	NA	NA	NA	NA	NA	NA	NA	NA	NA
NA	NA	NA	NA	NA	NA	NA	NA	NA	NA	NA	NA
NA	NA	NA	NA	NA	NA	NA	NA	NA	NA	NA	NA

***Drawing Showing Survey Points**

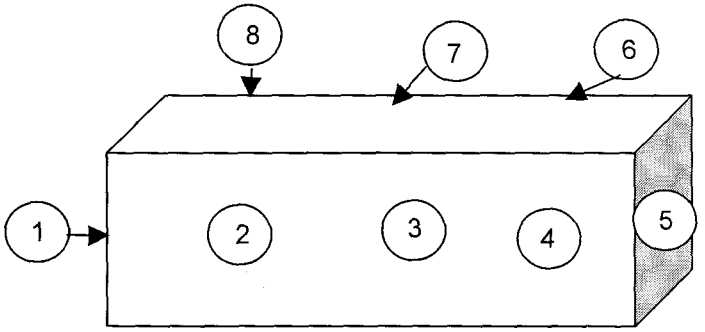

This survey is of the Intermodals that are ready to be shippedfrom the solar ponds. The WEMS numbers is L00888.

NOTE: Radiation readings are the highest for each distinct plane.

Performed by:	M. Simmers	M. Simmers	[redacted]	11/20/02
Name (Print)		Signature		Date
Approved by: RS Supervision:				11-21-02
Name (Print)		Signature		Date

RADIOACTIVE MATERIAL (RAM) PACKAGE SURVEY FORM

Location:	East of B solar ponds	Date:	11/20/02	Time:	1430

RWP # 02- RISS- 026

Survey Instrument Data:

Mfg:	Bicron	Eberline	Eberline	NA	NA
Model:	Microrem	SAC-4	BC-4	NA	NA
Serial #:	B891M	883	911	NA	NA
Cal Due Date:	1/28/03	2/28/03	10/30/03	NA	NA
Background:	< 0.1mrem/hr.	0 cpm	31.9 cpm	NA	NA
Efficiency:	NA	33%	25%	NA	NA
MDA	0.017 mrem/hr	20 dpm	200 dpm	NA	NA

Reason for Survey: Pre shipping to envirocare

Contamination (dpm/300 cm2)					Radiation (mrem/hr)						
Swipe #	Removable		Total		Package Exterior Contact and @ 1m						
	Alpha	Beta/Gamma	Alpha	Beta/Gamma		β/γ		Neutron		Total	
						Cont.	@1m	Cont.	@1m	Cont.	@1m
1	< 20	< 200	NA	NA	1	< 0.017	< 0.017	0	0	< 0.017	< 0.017
2	< 20	< 200	NA	NA	2	< 0.017	< 0.017	0	0	< 0.017	< 0.017
3	< 20	< 200	NA	NA	3	< 0.017	< 0.017	0	0	< 0.017	< 0.017
4	< 20	< 200	NA	NA	4	< 0.017	< 0.017	0	0	< 0.017	< 0.017
5	< 20	< 200	NA	NA	5	< 0.017	< 0.017	0	0	< 0.017	< 0.017
6	< 20	< 200	NA	NA	6	< 0.017	< 0.017	0	0	< 0.017	< 0.017
7	< 20	< 200	NA	NA	7	< 0.017	< 0.017	NA	NA	< 0.017	< 0.017
8	< 20	< 200	NA	NA	8	< 0.017	< 0.017	NA	NA	< 0.017	< 0.017
NA	NA	NA	NA	NA	NA	NA	NA	NA	NA	NA	NA
NA	NA	NA	NA	NA	NA	NA	NA	NA	NA	NA	NA
NA	NA	NA	NA	NA	NA	NA	NA	NA	NA	NA	NA
NA	NA	NA	NA	NA	NA	NA	NA	NA	NA	NA	NA

***Drawing Showing Survey Points**

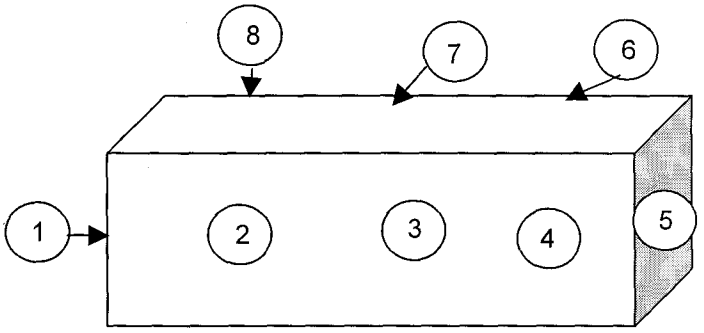

This survey is of the Intermodals that are ready to be shippedfrom the solar ponds. The WEMS numbers is L00870.

NOTE: Radiation readings are the highest for each distinct plane.

Performed by:	M. Simmers	/	[redacted]	/ 11/20/02
Name (Print)		Signature		Date
Approved by: RS Supervision:		/		11-21-02
Name (Print)		Signature		Date

2 of 2

ROCKY FLATS ENVIRONMENTAL TECHNOLOGY SITE

INSTRUMENT DATA

Mfg.	Ludlum	Mfg.	N/A	Mfg.	NE
Model	2929	Model	N/A	Model	Electra
Serial #	11/24/89	Serial #	N/A	Serial #	3252
Cal Due	3/26/03	Cal Due	N/A	Cal Due	2/6/03
Bkg	0.4 cpmα	Bkg	N/A cpmα	Bkg	3 cpmα
Efficiency	36.90 %	Efficiency	N/A %	Efficiency	21.80 %
MDA	18 dpmα	MDA	N/A dpmα	MDA	64 dpmα

Mfg.	Ludlum	Mfg.	N/A	Mfg.	NE
Model	2929	Model	N/A	Model	Electra
Serial #	11/24/89	Serial #	N/A	Serial #	3252
Cal Due	3/26/03	Cal Due	N/A	Cal Due	2/6/03
Bkg	53.8 cpmβ	Bkg	N/A cpmβ	Bkg	378 cpmβ
Efficiency	38.30 %	Efficiency	N/A %	Efficiency	31.60 %
MDA	205 dpmβ	MDA	N/A dpmβ	MDA	292 dpmβ

Survey Type: Contamination
Building: NA
Location: East of Solar Ponds
Purpose: Release of material
RWP #: NA
Date: 11/18/02 Time: 0:00
[redacted]
RCT: NA / . / NA
Print name Signature Emp. #

PRN/REN # :
Comments: Survey represents approximately 15% of entire surface area

SURVEY RESULTS

Swipe #	Results in DPM/100sq.cm	Removable Alpha	Removable Beta	Total Alpha	Total Beta
1	Asphalt Rubble	<18	<205	<64	<292
2	Asphalt Rubble	<18	<205	<64	<292
3	Asphalt Rubble	<18	<205	<64	<292
4	Asphalt Rubble	<18	<205	<64	<292
5	Asphalt Rubble	<18	<205	<64	<292
6	Asphalt Rubble	<18	<205	<64	<292
7	Asphalt Rubble	<18	<205	<64	<292
8	Asphalt Rubble	<18	<205	<64	<292
9	Asphalt Rubble	<18	<205	<64	<292
10	Asphalt Rubble	<18	<205	<64	<292
11	Asphalt Rubble	<18	<205	<64	<292
12	Asphalt Rubble	<18	<205	<64	<292
13	Asphalt Rubble	<18	<205	<64	<292
14	Asphalt Rubble	<18	<205	<64	<292
15	Asphalt Rubble	<18	<205	<64	<292
16	Asphalt Rubble	<18	<205	<64	<292
17	Asphalt Rubble	<18	<205	<64	<292
18	Asphalt Rubble	<18	<205	<64	<292
19	Asphalt Rubble	<18	<205	<64	<292
20	Asphalt Rubble	<18	<205	<64	<292
21	Asphalt Rubble	<18	<205	<64	<292
22	Asphalt Rubble	<18	<205	<64	<292
23	Asphalt Rubble	<18	<205	<64	<292
24	Asphalt Rubble	<18	<205	<64	<292
24	Asphalt Rubble	<18	<205	<64	<292

Swipe #	Location / Description Results in DPM/100sq.cm	Removable Alpha	Removable Beta	Total Alpha	Total Beta
26	Asphalt Rubble	<18	,205	<64	<292
27	Asphalt Rubble	<18	,205	<64	<292
28	Asphalt Rubble	<18	,205	<64	<292
29	Asphalt Rubble	<18	,205	<64	<292
30	Asphalt Rubble	<18	,205	<64	<292
31	Asphalt Rubble	<18	,205	<64	<292
32	Asphalt Rubble	<18	,205	<64	<292
33	Asphalt Rubble	<18	,205	<64	<292
34	Asphalt Rubble	<18	,205	<64	<292
35	Asphalt Rubble	<18	,205	<64	<292
36	Asphalt Rubble	<18	,205	<64	<292
37	Asphalt Rubble	<18	,205	<64	<292
38	Asphalt Rubble	<18	,205	<64	<292
39	Asphalt Rubble	<18	,205	<64	<292
40	Asphalt Rubble	<18	,205	<64	<292
41	Asphalt Rubble	<18	,205	<64	<292
42	Asphalt Rubble	<18	,205	<64	<292
43	Asphalt Rubble	<18	,205	<64	<292
44	Asphalt Rubble	<18	,205	<64	<292
45	Asphalt Rubble	<18	,205	<64	<292
46	Asphalt Rubble	<18	,205	<64	<292
47	Asphalt Rubble	<18	,205	<64	<292
48	Asphalt Rubble	<18	,205	<64	<292
49	Asphalt Rubble	<18	,205	<64	<292
50	Asphalt Rubble	<18	,205	<64	<292

Date Reviewed: 11-19-02 **RS Supervision:** Steve Gernatt / [signature] / [redacted]
Print Name Signature

ROCKY FLATS ENVIRONMENTAL TECHNOLOGY SITE

INSTRUMENT DATA

Mfg.	Eberline	Mfg.	Eberline	Mfg.	NE Electra
Model	SAC-4	Model	BC-4	Model	DP-6
Serial #	959	Serial #	702	Serial #	3113
Cal Due	1/18/03	Cal Due	7/22/03	Cal Due	3/24/03
Bkg	0.4 cpmα	Bkg	31.5 cpmβ	Bkg	3 cpmα
Eff.	33 %	Eff.	25 %	Eff.	21.5 %
MDA	20 dpmα	MDA	200 dpmβ	MDA	50 dpmα

Mfg.	Eberline	Mfg.	Eberline	Mfg.	NE Electra
Model	SAC-4	Model	BC-4	Model	DP-6
Serial #	N/	Serial #	N/	Serial #	3110
Cal Due	/A	Cal Due	/A	Cal Due	11/29/02
Bkg	NA cpmα	Bkg	NA cpmβ	Bkg	351 cpmβ
Eff.	33 %	Eff.	25 %	Eff.	32.4 %
MDA	20 dpmα	MDA	200 dpmβ	MDA	277 dpmβ

Survey Type: Contamination

Building: Solar Ponds

Location: north side A pond

Purpose: Daily of D8 dozer while pushing berms

RWP #: 02-RISS-026

Date: 11/16/02 Time: 1400

[redacted]

RCT: NA / NA / NA

Print name Signature Emp. #

PRN/REN # : NA

Comments:

SURVEY RESULTS

Swipe #	LOCATION	ALPHA Swipe dpm/100cm2	ALPHA Direct dpm/100cm2	ALPHA Wipe dpm/wipe	BETA Swipe dpm/100cm2	BETA Direct dpm/100cm2	BETA Wipe dpm/wipe
1	cab interior and pedals	<20	<50	NA	<200	<277	NA
2	upper L track	<20	<50		<200	<277	
3	lower inner L track	<20	<50		<200	<277	
4	L lower side of blade	<20	<50		<200	<277	
5	R inner side of blade	<20	<50		<200	<277	
6	R upper track	<20	<50		<200	<277	
7	R lower inner track	<20	<50		<200	<277	
8	R side claw	<20	<50		<200	<277	
9	L side claw	<20	<50		<200	<277	
NA	NA	NA	NA		NA	NA	
NA	NA	NA	NA	NA	NA	NA	NA

Date Reviewed: 112902 **RS Supervision:** [signature] / [signature]

Print Name Signature

[redacted]

268

Drawing Showing Survey Points

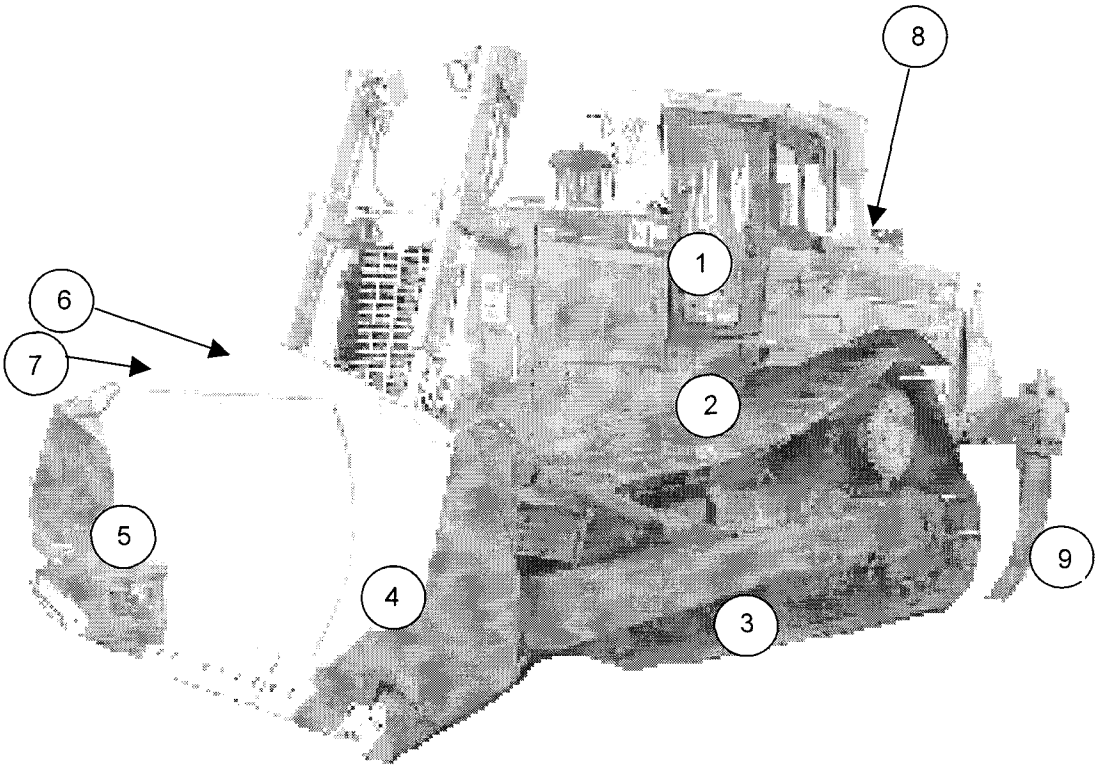

2169

Att: Dave Irvin

RADIOACTIVE MATERIAL (RAM) PACKAGE SURVEY FORM

Location:	East of B solar ponds	Date:	11/16/02	Time:	0810
RWP # 02-RISS-026					

Survey Instrument Data:

Mfg:	Bicron	Eberline	Eberline	NA	NA
Model:	Microrem	SAC-4	BC-4	NA	NA
Serial #:	B982H	959	702	NA	NA
Cal Due Date:	2/12/03	1/18/03	1/12/03	NA	NA
Background:	< 0.01mrem/hr.	0.4	32.6	NA	NA
Efficiency:	NA	33%	25%	NA	NA
MDA	0.017 mrem/hr	20dpm	200 dpm	NA	NA

Reason for Survey: Pre shipping to envirocare

Contamination (dpm/300 cm2)					Radiation (mrem/hr)						
Swipe #	Removable		Total		Package Exterior Contact and @ 1m						
	Alpha	Beta/Gamma	Alpha	Beta/Gamma		β/γ		Neutron		Total	
						Cont.	@1m	Cont.	@1m	Cont.	@1m
1	< 18	< 205	NA	NA	1	< 0.017	< 0.017	0	0	< 0.017	< 0.017
2	< 18	< 205	NA	NA	2	< 0.017	< 0.017	0	0	< 0.017	< 0.017
3	< 18	< 205	NA	NA	3	< 0.017	< 0.017	0	0	< 0.017	< 0.017
4	< 18	< 205	NA	NA	4	< 0.017	< 0.017	0	0	< 0.017	< 0.017
5	< 18	< 205	NA	NA	5	< 0.017	< 0.017	0	0	< 0.017	< 0.017
6	< 18	< 205	NA	NA	6	< 0.017	< 0.017	0	0	< 0.017	< 0.017
7	< 18	< 205	NA	NA	7	< 0.017	< 0.017	0	0	< 0.017	< 0.017
8	< 18	< 205	NA	NA	8	< 0.017	< 0.017	0	0	< 0.017	< 0.017
NA	NA	NA	NA	NA	NA	NA	NA	NA	NA	NA	NA
NA	NA	NA	NA	NA	NA	NA	NA	NA	NA	NA	NA
NA	NA	NA	NA	NA	NA	NA	NA	NA	NA	NA	NA
NA	NA	NA	NA	NA	NA	NA	NA	NA	NA	NA	NA

***Drawing Showing Survey Points**

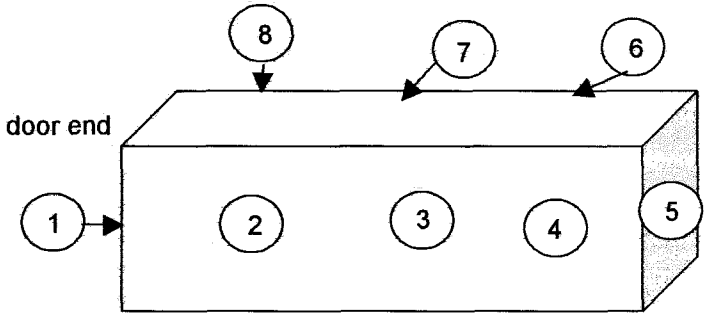

This survey is of the cargol container that is ready to be shipped from the solar ponds. The WEMS numbers is X30376.

NOTE: Radiation readings are the highest for each distinct plane.

Performed by:	J. Kennedy	[redacted]	[redacted]	11/16/02
Name (Print)		Signature		Date
Approved by: RS Supervision:	James W Smith	James W Smith	[redacted]	11/16/02
Name (Print)		Signature	Employee #	Date

270

RADIOACTIVE MATERIAL (RAM) PACKAGE SURVEY FORM

Location:	East of B solar ponds	Date:	11/16/02	Time:	0810
RWP # 02- RISS- 026					

Survey Instrument Data:

Mfg:	Bicron	Eberline	Eberline	NA	NA
Model:	Microrem	SAC-4	BC-4	NA	NA
Serial #:	B982H	959	702	NA	NA
Cal Due Date:	2/12/03	1/18/03	7/22/03	NA	NA
Background:	< 0.01mrem/hr.	0.4	32.6	NA	NA
Efficiency:	NA	33%	25%	NA	NA
MDA	0.017 mrem/hr	20 dpm	200 dpm	NA	NA

Reason for Survey: Pre shipping to envirocare

Contamination (dpm/300 cm2)					**Radiation (mrem/hr)**						
Swipe #	Removable		Total		Package Exterior Contact and @ 1m						
	Alpha	Beta/Gamma	Alpha	Beta/Gamma		β/γ		Neutron		Total	
						Cont.	@1m	Cont.	@1m	Cont.	@1m
1	< 20	< 200	NA	NA	1	< 0.017	< 0.017	0	0	< 0.017	< 0.017
2	< 20	< 200	NA	NA	2	< 0.017	< 0.017	0	0	< 0.017	< 0.017
3	< 20	< 200	NA	NA	3	< 0.017	< 0.017	0	0	< 0.017	< 0.017
4	< 20	< 200	NA	NA	4	< 0.017	< 0.017	0	0	< 0.017	< 0.017
5	< 20	< 200	NA	NA	5	< 0.017	< 0.017	0	0	< 0.017	< 0.017
6	< 20	< 200	NA	NA	6	< 0.017	< 0.017	0	0	< 0.017	< 0.017
7	< 20	< 200	NA	NA	7	< 0.017	< 0.017	0	0	< 0.017	< 0.017
8	< 20	< 200	NA	NA	8	< 0.017	< 0.017	0	0	< 0.017	< 0.017
NA	NA	NA	NA	NA	NA	NA	NA	NA	NA	NA	NA
NA	NA	NA	NA	NA	NA	NA	NA	NA	NA	NA	NA
NA	NA	NA	NA	NA	NA	NA	NA	NA	NA	NA	NA
NA	NA	NA	NA	NA	NA	NA	NA	NA	NA	NA	NA

***Drawing Showing Survey Points**

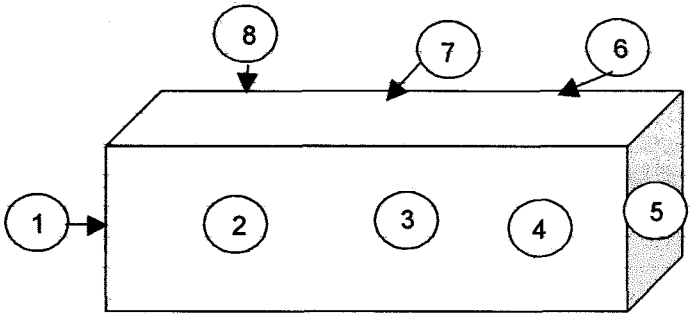

This survey is of the cargo container that is ready to be shipped from the solar ponds. The WEMS numbers is X30391.

NOTE: Radiation readings are the highest for each distinct plane.

Performed by:	J. Kennedy	/	[redacted]	/ 11/16/02
	Name (Print)	Signature		Date
Approved by: RS Supervision:	James W Smith	James W. Smith	[redacted]	12-11-02
	Name (Print)	Signature	Employee #	Date

271

RADIOACTIVE MATERIAL (RAM) PACKAGE SURVEY FORM

Location:	East of B solar ponds	Date:	11/16/02	Time:	0810
RWP # 02- RISS- 026					

Survey Instrument Data:

Mfg:	Bicron	Eberline	Eberline	NA	NA
Model:	Microrem	SAC-4	BC-4	NA	NA
Serial #:	B982H	959	702	NA	NA
Cal Due Date:	2/12/03	1/18/03	7/22/03	NA	NA
Background:	< 0.01mrem/hr.	0.4	32.6	NA	NA
Efficiency:	NA	33%	25%	NA	NA
MDA	0.017 mrem/hr	20 dpm	200 dpm	NA	NA

Reason for Survey: Pre shipping to envirocare

Contamination (dpm/300 cm2)					**Radiation (mrem/hr)**						
Swipe #	Removable		Total		Package Exterior Contact and @ 1m						
	Alpha	Beta/Gamma	Alpha	Beta/Gamma		β/γ		Neutron		Total	
						Cont.	@1m	Cont.	@1m	Cont.	@1m
1	< 20	< 200	NA	NA	1	< 0.017	< 0.017	0	0	< 0.017	< 0.017
2	< 20	< 200	NA	NA	2	< 0.017	< 0.017	0	0	< 0.017	< 0.017
3	< 20	< 200	NA	NA	3	< 0.017	< 0.017	0	0	< 0.017	< 0.017
4	< 20	< 200	NA	NA	4	< 0.017	< 0.017	0	0	< 0.017	< 0.017
5	< 20	< 200	NA	NA	5	< 0.017	< 0.017	0	0	< 0.017	< 0.017
6	< 20	< 200	NA	NA	6	< 0.017	< 0.017	0	0	< 0.017	< 0.017
7	< 20	< 200	NA	NA	7	< 0.017	< 0.017	0	0	< 0.017	< 0.017
8	< 20	< 200	NA	NA	8	< 0.017	< 0.017	0	0	< 0.017	< 0.017
NA	NA	NA	NA	NA	NA	NA	NA	NA	NA	NA	NA
NA	NA	NA	NA	NA	NA	NA	NA	NA	NA	NA	NA
NA	NA	NA	NA	NA	NA	NA	NA	NA	NA	NA	NA
NA	NA	NA	NA	NA	NA	NA	NA	NA	NA	NA	NA

***Drawing Showing Survey Points**

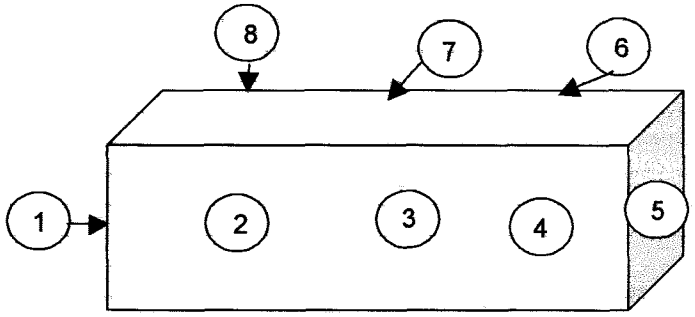

This survey is of the cargo container that is ready to be shipped from the solar ponds. The WEMS numbers is X30523.

NOTE: Radiation readings are the highest for each distinct plane.

Performed by:	J. Kennedy	/ [signature]	[redacted]	/ 11/16/02
	Name (Print)	Signature		Date
Approved by: RS Supervision:	James W Smith	James W Smith	[redacted]	12-11-02
	Name (Print)	Signature		Date

RADIOACTIVE MATERIAL (RAM) PACKAGE SURVEY FORM

Location:	East of B solar ponds	Date:	11/16/02	Time:	0810
RWP # 02- RISS- 026					

Survey Instrument Data:

Mfg:	Bicron	Eberline	Eberline	NA	NA
Model:	Microrem	SAC-4	BC-4	NA	NA
Serial #:	B982H	959	702	NA	NA
Cal Due Date:	2/12/03	1/18/03	7/22/03	NA	NA
Background:	< 0.01mrem/hr.	0.4	32.6	NA	NA
Efficiency:	NA	33%	25%	NA	NA
MDA	0.017 mrem/hr	20 dpm	200 dpm	NA	NA

Reason for Survey: Pre shipping to envirocare

Contamination (dpm/300 cm2)					Radiation (mrem/hr)						
Swipe #	Removable		Total		Package Exterior Contact and @ 1m						
	Alpha	Beta/Gamma	Alpha	Beta/Gamma		β/γ		Neutron		Total	
						Cont.	@1m	Cont.	@1m	Cont.	@1m
1	< 20	< 200	NA	NA	1	< 0.017	< 0.017	0	0	< 0.017	< 0.017
2	< 20	< 200	NA	NA	2	< 0.017	< 0.017	0	0	< 0.017	< 0.017
3	< 20	< 200	NA	NA	3	< 0.017	< 0.017	0	0	< 0.017	< 0.017
4	< 20	< 200	NA	NA	4	< 0.017	< 0.017	0	0	< 0.017	< 0.017
5	< 20	< 200	NA	NA	5	< 0.017	< 0.017	0	0	< 0.017	< 0.017
6	< 20	< 200	NA	NA	6	< 0.017	< 0.017	0	0	< 0.017	< 0.017
7	< 20	< 200	NA	NA	7	< 0.017	< 0.017	0	0	< 0.017	< 0.017
8	< 20	< 200	NA	NA	8	< 0.017	< 0.017	0	0	< 0.017	< 0.017
NA	NA	NA	NA	NA	NA	NA	NA	NA	NA	NA	NA
NA	NA	NA	NA	NA	NA	NA	NA	NA	NA	NA	NA
NA	NA	NA	NA	NA	NA	NA	NA	NA	NA	NA	NA
NA	NA	NA	NA	NA	NA	NA	NA	NA	NA	NA	NA

***Drawing Showing Survey Points**

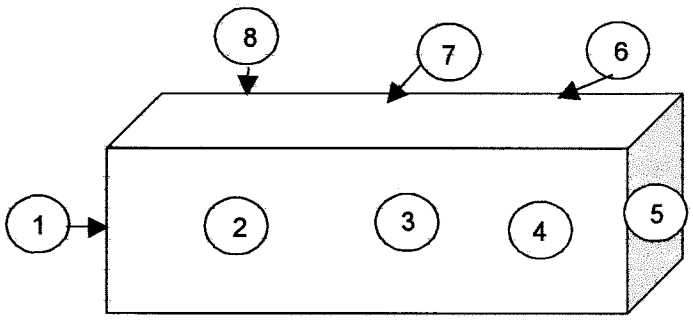

This survey is of the cargo container that is ready to be shipped from the solar ponds. The WEMS numbers is X30607.

NOTE: Radiation readings are the highest for each distinct plane.

Performed by:	J. Kennedy	/ JK /	[redacted]	/ 11/16/02
	Name (Print)	Signature		Date
Approved by: RS Supervision:	James W Smith	/ James W Smith /	[redacted]	11-12-02
	Name (Print)	Signature		Date

273

RADIOACTIVE MATERIAL (RAM) PACKAGE SURVEY FORM

Location:	East of B solar ponds	Date:	11/16/02	Time:	0810

RWP # 02- RISS- 026

Survey Instrument Data:

Mfg:	Bicron	Eberline	Eberline	NA	NA
Model:	Microrem	SAC-4	BC-4	NA	NA
Serial #:	B982H	959	702	NA	NA
Cal Due Date:	2/12/03	1/18/03	7/22/03	NA	NA
Background:	< 0.01mrem/hr.	0.4	32.6	NA	NA
Efficiency:	NA	33%	25%	NA	NA
MDA	0.017 mrem/hr	20 dpm	200 dpm	NA	NA

Reason for Survey: Pre shipping to envirocare

Contamination (dpm/300 cm2)					**Radiation (mrem/hr)**						
Swipe #	Removable		Total		Package Exterior Contact and @ 1m						
	Alpha	Beta/Gamma	Alpha	Beta/Gamma		β/γ		Neutron		Total	
						Cont.	@1m	Cont.	@1m	Cont.	@1m
1	< 20	< 200	NA	NA	1	< 0.017	< 0.017	0	0	< 0.017	< 0.017
2	< 20	< 200	NA	NA	2	< 0.017	< 0.017	0	0	< 0.017	< 0.017
3	< 20	< 200	NA	NA	3	< 0.017	< 0.017	0	0	< 0.017	< 0.017
4	< 20	< 200	NA	NA	4	< 0.017	< 0.017	0	0	< 0.017	< 0.017
5	< 20	< 200	NA	NA	5	< 0.017	< 0.017	0	0	< 0.017	< 0.017
6	< 20	< 200	NA	NA	6	< 0.017	< 0.017	0	0	< 0.017	< 0.017
7	< 20	< 200	NA	NA	7	< 0.017	< 0.017	0	0	< 0.017	< 0.017
8	< 20	< 200	NA	NA	8	< 0.017	< 0.017	0	0	< 0.017	< 0.017
NA	NA	NA	NA	NA	NA	NA	NA	NA	NA	NA	NA
NA	NA	NA	NA	NA	NA	NA	NA	NA	NA	NA	NA
NA	NA	NA	NA	NA	NA	NA	NA	NA	NA	NA	NA
NA	NA	NA	NA	NA	NA	NA	NA	NA	NA	NA	NA

***Drawing Showing Survey Points**

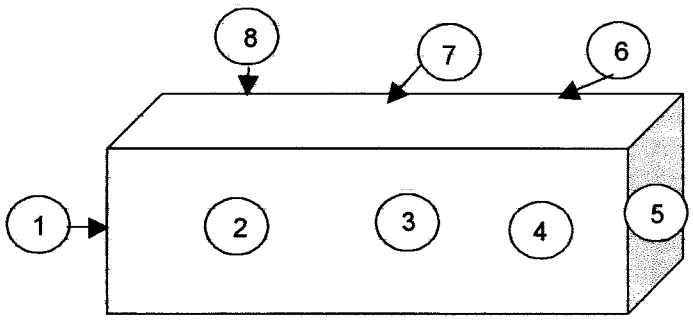

This survey is of the cargo container that is ready to be shipped from the solar ponds. The WEMS numbers is X30608.

NOTE: Radiation readings are the highest for each distinct plane.

Performed by:	J. Kennedy	/	/ [redacted]	/ 11/16/02
	Name (Print)	Signature		Date
Approved by: RS Supervision:	James W Smith	James W Smith		11-11-02
	Name (Print)	Signature	Employee #	Date

274

RADIOACTIVE MATERIAL (RAM) PACKAGE SURVEY FORM

Location:	East of B solar ponds	Date:	11/16/02	Time:	0810
RWP # 02- RISS- 026					

Survey Instrument Data:

Mfg:	Bicron	Eberline	Eberline	NA	NA
Model:	Microrem	SAC-4	BC-4	NA	NA
Serial #:	B982H	959	702	NA	NA
Cal Due Date:	2/12/03	1/18/03	7/22/03	NA	NA
Background:	< 0.01mrem/hr.	0.4	32.6	NA	NA
Efficiency:	NA	33%	25%	NA	NA
MDA	0.017 mrem/hr	20 dpm	200 dpm	NA	NA

Reason for Survey: Pre shipping to envirocare

Contamination (dpm/300 cm2)					**Radiation (mrem/hr)**						
Swipe #	Removable		Total		Package Exterior Contact and @ 1m						
	Alpha	Beta/Gamma	Alpha	Beta/Gamma		β/γ		Neutron		Total	
						Cont.	@1m	Cont.	@1m	Cont.	@1m
1	< 20	< 200	NA	NA	1	< 0.017	< 0.017	0	0	< 0.017	< 0.017
2	< 20	< 200	NA	NA	2	< 0.017	< 0.017	0	0	< 0.017	< 0.017
3	< 20	< 200	NA	NA	3	< 0.017	< 0.017	0	0	< 0.017	< 0.017
4	< 20	< 200	NA	NA	4	< 0.017	< 0.017	0	0	< 0.017	< 0.017
5	< 20	< 200	NA	NA	5	< 0.017	< 0.017	0	0	< 0.017	< 0.017
6	< 20	< 200	NA	NA	6	< 0.017	< 0.017	0	0	< 0.017	< 0.017
7	< 20	< 200	NA	NA	7	< 0.017	< 0.017	0	0	< 0.017	< 0.017
8	< 20	< 200	NA	NA	8	< 0.017	< 0.017	0	0	< 0.017	< 0.017
NA	NA	NA	NA	NA	NA	NA	NA	NA	NA	NA	NA
NA	NA	NA	NA	NA	NA	NA	NA	NA	NA	NA	NA
NA	NA	NA	NA	NA	NA	NA	NA	NA	NA	NA	NA
NA	NA	NA	NA	NA	NA	NA	NA	NA	NA	NA	NA

***Drawing Showing Survey Points**

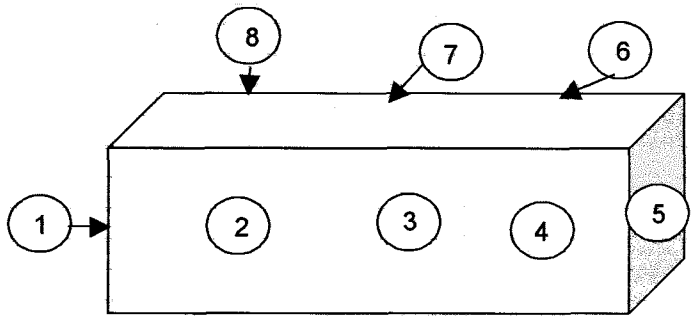

This survey is of the cargo container that is ready to be shipped from the solar ponds. The WEMS numbers is X30524.

NOTE: Radiation readings are the highest for each distinct plane.

Performed by:	J. Kennedy	[redacted]	11/16/02
Name (Print)		Signature	Date
Approved by: RS Supervision:	James W Smith	[redacted]	11-12-02
Name (Print)		Signature	Date

RADIOACTIVE MATERIAL (RAM) PACKAGE SURVEY FORM

Location:	East of B solar ponds	Date:	11/16/02	Time:	0810

RWP # 02- RISS- 026

Survey Instrument Data:

Mfg:	Bicron	Eberline	Eberline	NA	NA
Model:	Microrem	SAC-4	BC-4	NA	NA
Serial #:	B982H	959	702	NA	NA
Cal Due Date:	2/12/03	1/18/03	7/22/03	NA	NA
Background:	< 0.01mrem/hr.	0.4	32.6	NA	NA
Efficiency:	NA	33%	25%	NA	NA
MDA	0.017 mrem/hr	20 dpm	200 dpm	NA	NA

Reason for Survey: Pre shipping to envirocare

Contamination (dpm/300 cm2)					**Radiation (mrem/hr)**						
Swipe #	Removable		Total		Package Exterior Contact and @ 1m						
	Alpha	Beta/Gamma	Alpha	Beta/Gamma		β/γ		Neutron		Total	
						Cont.	@1m	Cont.	@1m	Cont.	@1m
1	< 20	< 200	NA	NA	1	< 0.017	< 0.017	0	0	< 0.017	< 0.017
2	< 20	< 200	NA	NA	2	< 0.017	< 0.017	0	0	< 0.017	< 0.017
3	< 20	< 200	NA	NA	3	< 0.017	< 0.017	0	0	< 0.017	< 0.017
4	< 20	< 200	NA	NA	4	< 0.017	< 0.017	0	0	< 0.017	< 0.017
5	< 20	< 200	NA	NA	5	< 0.017	< 0.017	0	0	< 0.017	< 0.017
6	< 20	< 200	NA	NA	6	< 0.017	< 0.017	0	0	< 0.017	< 0.017
7	< 20	< 200	NA	NA	7	< 0.017	< 0.017	0	0	< 0.017	< 0.017
8	< 20	< 200	NA	NA	8	< 0.017	< 0.017	0	0	< 0.017	< 0.017
NA	NA	NA	NA	NA	NA	NA	NA	NA	NA	NA	NA
NA	NA	NA	NA	NA	NA	NA	NA	NA	NA	NA	NA
NA	NA	NA	NA	NA	NA	NA	NA	NA	NA	NA	NA
NA	NA	NA	NA	NA	NA	NA	NA	NA	NA	NA	NA

***Drawing Showing Survey Points**

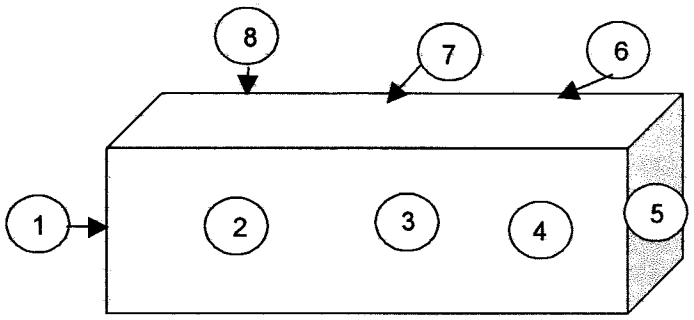

This survey is of the cargo container that is ready to be shipped from the solar ponds. The WEMS numbers is X30488.

NOTE: Radiation readings are the highest for each distinct plane.

Performed by:	J. Kennedy	[redacted]	11/16/02
Name (Print)		Signature	Date
Approved by: RS Supervision:	James W. Smith	James W. Smith [redacted]	11-11-02
Name (Print)		Signature	Date

276

ROCKY FLATS ENVIRONMENTAL TECHNOLOGY SITE

INSTRUMENT DATA

Mfg.	Eberline	Mfg.	NE	Mfg.	Bicron
Model	SAC 4	Model	Electra	Model	Micro Rem
Serial #	959	Serial #	3113	Serial #	B982H
Cal Due	1/18/03	Cal Due	3/24/03	Cal Due	2/12/03
Bkg	0.4 cpmα	Bkg	3 cpmα	Bkg	10 cpmα
Efficiency	33.00 %	Efficiency	21.50 %	Efficiency	NA %
MDA	20 dpmα	MDA	50 dpmα	MDA	17 dpmα
Mfg.	Eberline	Mfg.	NE	Mfg.	NA
Model	BC 4	Model	Electra	Model	NA
Serial #	702	Serial #	3113	Serial #	B982H
Cal Due	7/22/03	Cal Due	3/24/03	Cal Due	2/12/03
Bkg	32.6 cpmβ	Bkg	351 cpmβ	Bkg	NA cpmβ
Efficiency	25.00 %	Efficiency	32.40 %	Efficiency	NA %
MDA	200 dpmβ	MDA	277 dpmβ	MDA	NA dpmβ

Survey Type: Contamination
Building: Cargo Containers
Location: Solar Ponds
Purpose: Off-site Shipment

RWP #: 02-RISS-026

Date: 11/16/02 Time: 8:10: AM

[redacted]

RCT: NA / NA / NA
Print name Signature Emp. #

PRN/REN # : NA

Comments: Cargo Containers from Solar Ponds. Sample points typical on all containers (X30467, X30465, X30446,X0447, X30445, X30590, X30593,, X30488, X30524, X30608, X30481, X30377, X30588, X30591, X30401, X30391, X30376, X30523, X30607). Dose rates <17 ur/hr

SURVEY RESULTS

Swipe #	Location / Description Results in DPM/100sq.cm	Removable		Total	
		Alpha	Beta	Alpha	Beta
1	Top	<20	<200	<21.5	<277
2	Top	<20	<200	<21.5	<277
3	Left Side	<20	<200	<21.5	<277
4	Left Side	<20	<200	<21.5	<277
5	Right Side	<20	<200	<21.5	<277
6	Right Side	<20	<200	<21.5	<277
7	Bottom	<20	<200	<21.5	<277
8	Bottom	<20	<200	<21.5	<277
9	Back Side	<20	<200	<21.5	<277
10	Back Side	<20	<200	<21.5	<277
11	NA	NA	NA	NA	NA
12	NA	NA	NA	NA	NA
13	NA	NA	NA	NA	NA
14	NA	NA	NA	NA	NA
15	NA	NA	NA	NA	NA
16	NA	NA	NA	NA	NA
17	NA	NA	NA	NA	NA
18	NA	NA	NA	NA	NA
19	NA	NA	NA	NA	NA
20	NA	NA	NA	NA	NA
21	NA	NA	NA	NA	NA
22	NA	NA	NA	NA	NA
23	NA	NA	NA	NA	NA
24	NA	NA	NA	NA	NA
25	NA	NA	NA	NA	NA

Map

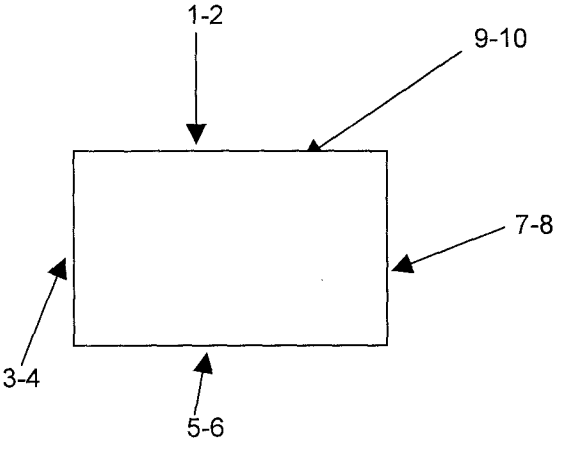

Date Reviewed: 11-20-02 **RS Supervision:** S GERNATT / [redacted] /
Print Name Signature

777

ROCKY FLATS ENVIRONMENTAL TECHNOLOGY SITE

INSTRUMENT DATA

Mfg.	Eberline	Mfg.	NE	Mfg.	NA
Model	SAC 4	Model	Electra	Model	NA
Serial #	959	Serial #	3113	Serial #	NA
Cal Due	1/18/03	Cal Due	3/24/03	Cal Due	NA
Bkg	0.1 cpmα	Bkg	2 cpmα	Bkg	NA cpmα
Efficiency	33.00 %	Efficiency	21.50 %	Efficiency	NA %
MDA	20 dpmα	MDA	43 dpmα	MDA	NA dpmα
Mfg.	Eberline	Mfg.	NE	Mfg.	NA
Model	BC 4	Model	Electra	Model	NA
Serial #	702	Serial #	3113	Serial #	NA
Cal Due	7/22/03	Cal Due	3/24/03	Cal Due	NA
Bkg	32.6 cpmβ	Bkg	279 cpmβ	Bkg	NA cpmβ
Efficiency	25.00 %	Efficiency	32.40 %	Efficiency	NA %
MDA	200 dpmβ	MDA	248 dpmβ	MDA	NA dpmβ

Survey Type: Contamination
Building: General Area
Location: Solar Ponds
Purpose: Off-site Shipment

RWP #: 02-RISS-022

Date: 11/14/02 Time: 8:30

[redacted]

RCT: NA / . / NA
Print name Signature Emp. #

PRN/REN # : NA
Comments: Sample ponits typical on all 11 containers (B02845, B03662, B03663, B03664, B03905, B03906, B03963, B03964, B03974, B03975, B03976)

SURVEY RESULTS

Swipe #	Location / Description Results in DPM/100sq.cm	Removable		Total	
		Alpha	Beta	Alpha	Beta
1	Top	<20	<200	<43	<248
2	Top	<20	<200	<43	<248
3	Left Side	<20	<200	<43	<248
4	Left Side	<20	<200	<43	<248
5	Right Side	<20	<200	<43	<248
6	Right Side	<20	<200	<43	<248
7	Bottom	<20	<200	<43	<248
8	Bottom	<20	<200	<43	<248
9	Back Side	<20	<200	<43	<248
10	Back Side	<20	<200	<43	<248
11	NA	NA	NA	NA	NA
12	NA	NA	NA	NA	NA
13	NA	NA	NA	NA	NA
14	NA	NA	NA	NA	NA
15	NA	NA	NA	NA	NA
16	NA	NA	NA	NA	NA
17	NA	NA	NA	NA	NA
18	NA	NA	NA	NA	NA
19	NA	NA	NA	NA	NA
20	NA	NA	NA	NA	NA
21	NA	NA	NA	NA	NA
22	NA	NA	NA	NA	NA
23	NA	NA	NA	NA	NA
24	NA	NA	NA	NA	NA
25	NA	NA	NA	NA	NA

Map

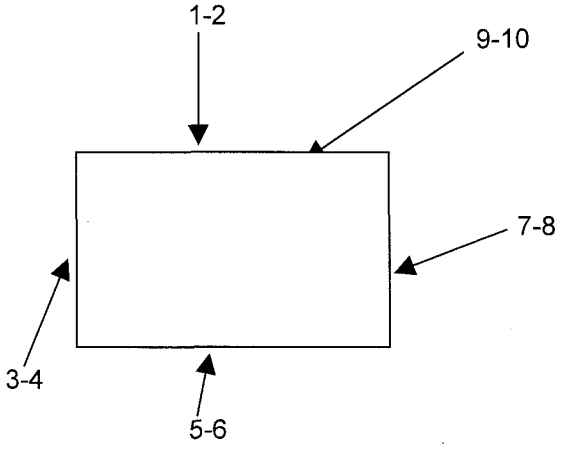

Date Reviewed: 11-14-02 **RS Supervision:** S GERNATT / [redacted]
Print Name Signature

ROCKY FLATS ENVIRONMENTAL TECHNOLOGY SITE

INSTRUMENT DATA

Mfg.	Eberline	Mfg.	NE	Mfg.	NE
Model	SAC 4	Model	Electra	Model	Electra
Serial #	959	Serial #	3113	Serial #	3110
Cal Due	1/18/03	Cal Due	11/29/02	Cal Due	11/29/02
Bkg	0.1 cpmα	Bkg	0.1 cpmα	Bkg	4 cpmα
Efficiency	33.00 %	Efficiency	20.90 %	Efficiency	20.40 %
MDA	20 dpmα	MDA	20 dpmα	MDA	59 dpmα

Mfg.	Eberline	Mfg.	NE	Mfg.	NE
Model	BC 4	Model	Electra	Model	Electra
Serial #	702	Serial #	3113	Serial #	3110
Cal Due	7/22/03	Cal Due	11/29/02	Cal Due	11/29/02
Bkg	30.3 cpmβ	Bkg	320 cpmβ	Bkg	471 cpmβ
Efficiency	25.00 %	Efficiency	34.00 %	Efficiency	28.20 %
MDA	200 dpmβ	MDA	253 dpmβ	MDA	367 dpmβ

Survey Type: Contamination
Building: Solar Ponds
Location: General Area
Purpose: Baseline

RWP #: 02-RISS-021

Date: 11/12/02 Time: 15:00

[redacted]

RCT: NA / NA / NA
Print name Signature Emp. #

PRN/REN # : NA
Comments: Baseline Survey on "long reach" track hoe. Picture shown is typical of track hoe but not the actual piece of equipment.

SURVEY RESULTS

Swipe #	Location / Description Results in DPM/100sq.cm	Removable		Total	
		Alpha	Beta	Alpha	Beta
1	BUCKET	< 20	< 200	<20	<253
2	BUCKET	< 20	< 200	<20	<253
3	BUCKET	< 20	< 200	<20	<253
4	BUCKET	< 20	< 200	<20	<253
5	BUCKET	< 20	< 200	<20	<253
6	TRACKS	< 20	< 200	<20	<253
7	TRACKS	< 20	< 200	<20	<253
8	TRACKS	< 20	< 200	<20	<253
9	TRACKS	< 20	< 200	<20	<253
10	TRACKS	< 20	< 200	<20	<253
11	BOOM	< 20	< 200	<20	<253
12	BOOM	< 20	< 200	<20	<253
13	BOOM	< 20	< 200	<20	<253
14	BOOM	< 20	< 200	<20	<253
15	BOOM	< 20	< 200	<20	<253
16	BODY	< 20	< 200	<20	<253
17	BODY	< 20	< 200	<20	<253
18	BODY	< 20	< 200	<20	<253
19	BODY	< 20	< 200	<20	<253
20	BODY	< 20	< 200	<20	<253
21	CAB	< 20	< 200	<20	<253
22	CAB	< 20	< 200	<20	<253
23	CAB	< 20	< 200	<20	<253
24	CAB	< 20	< 200	<20	<253
25	CAB	< 20	< 200	<20	<253

MAP

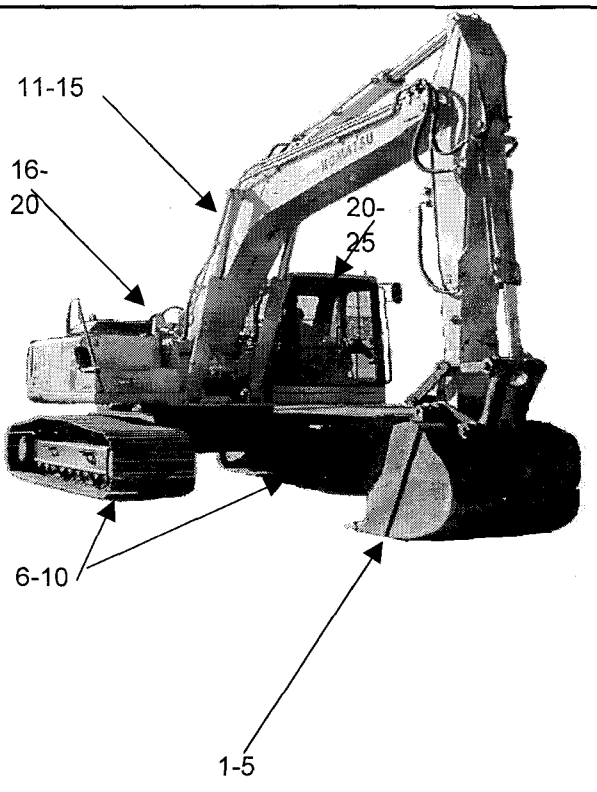

Date Reviewed: 11-20-02 **RS Supervision:** Steve Gernatt / [redacted]
Print Name Signature

279

ROCKY FLATS ENVIRONMENTAL TECHNOLOGY SITE

INSTRUMENT DATA

Mfg.	Eberline	Mfg.	Eberline	Mfg.	NE Electra
Model	SAC-4	Model	BC-4	Model	DP-6
Serial #	959	Serial #	702	Serial #	3110
Cal Due	1/18/03	Cal Due	7/22/03	Cal Due	11/29/02
Bkg	0.1 cpmα	Bkg	36 cpmβ	Bkg	1 cpmα
Eff.	33 %	Eff.	25 %	Eff.	21.5 %
MDA	20 dpmα	MDA	200 dpmβ	MDA	34 dpmα

Mfg.	Eberline	Mfg.	Eberline	Mfg.	NE Electra
Model	SAC-4	Model	BC-4	Model	DP-6
Serial #	N/A	Serial #	N/A	Serial #	3110
Cal Due	N/A	Cal Due	N/A	Cal Due	11/29/02
Bkg	cpmα	Bkg	cpmβ	Bkg	459 cpmβ
Eff.	33 %	Eff.	25 %	Eff.	32.4 %
MDA	20 dpmα	MDA	200 dpmβ	MDA	316 dpmβ

Survey Type: Contamination
Building: Solar Ponds
Location: East of B ponds
Purpose: Acceptance baseline of D8 dozer RE-022

RWP #: 02-RISS-020

Date: 11/11/02 Time: 1400

[redacted]

RCT: NA / NA / NA
Print name / Signature / Emp. #

PRN/REN # : NA
Comments:

SURVEY RESULTS

Swipe #	LOCATION	ALPHA Swipe dpm/100cm2	ALPHA Direct dpm/100cm2	ALPHA Wipe dpm/wipe	BETA Swipe dpm/100cm2	BETA Direct dpm/100cm2	BETA Wipe dpm/wipe
1	cab interior and pedals	<20	<34	NA	<200	<316	NA
2	upper L track	<20	<34		<200	<316	
3	lower inner L track	<20	<34		<200	<316	
4	L lower side of blade	<20	<34		<200	<316	
5	R inner side of blade	<20	<34		<200	<316	
6	R upper track	<20	<34		<200	<316	
7	R lower inner track	<20	<34		<200	<316	
8	R side claw	<20	<34		<200	<316	
9	L side claw	<20	<34		<200	<316	
NA	NA	NA	NA		NA	NA	
NA	NA	NA	NA	NA	NA	NA	NA

Date Reviewed: 11/20/02 **RS Supervision:** S Eggett / [signature]
Print Name / Signature

[redacted]

280

ROCKY FLATS ENVIRONMENTAL TECHNOLOGY SITE

Drawing Showing Survey Points

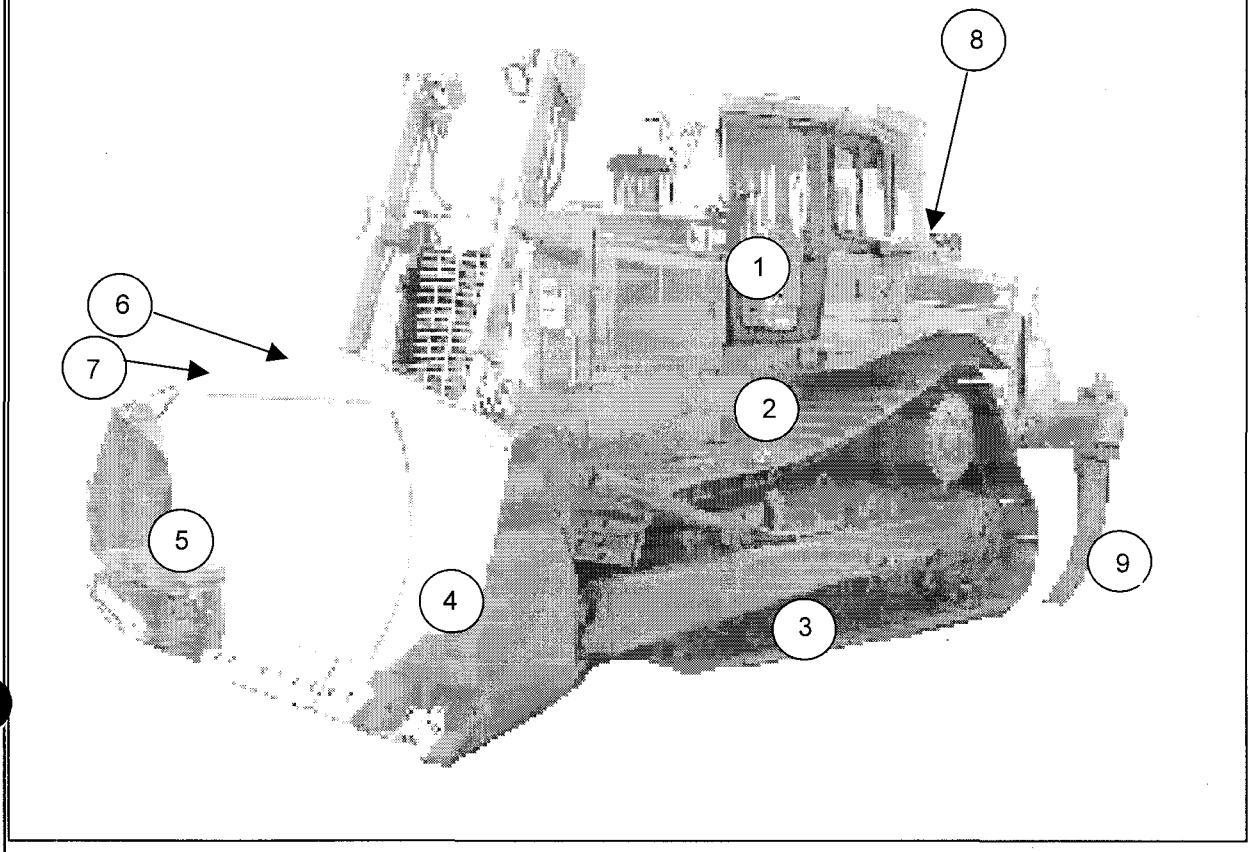

281

ROCKY FLATS ENVIRONMENTAL TECHNOLOGY SITE

INSTRUMENT DATA

Mfg.	Eberline	Mfg.	NE	Mfg.	NA
Model	SAC 4	Model	Electra	Model	NA
Serial #	959	Serial #	1589	Serial #	NA
Cal Due	1/18/03	Cal Due	4/30/03	Cal Due	NA
Bkg	0.1 cpmα	Bkg	3 cpmα	Bkg	NA cpmα
Efficiency	33.00 %	Efficiency	20.90 %	Efficiency	NA %
MDA	20 dpmα	MDA	52 dpmα	MDA	NA dpmα
Mfg.	Eberline	Mfg.	NE	Mfg.	NA
Model	BC 4	Model	Electra	Model	NA
Serial #	702	Serial #	1589	Serial #	NA
Cal Due	7/22/03	Cal Due	4/30/03	Cal Due	NA
Bkg	33.6 cpmβ	Bkg	367 cpmβ	Bkg	NA cpmβ
Efficiency	25.00 %	Efficiency	34.00 %	Efficiency	NA %
MDA	200 dpmβ	MDA	270 dpmβ	MDA	NA dpmβ

Survey Type: Contamination
Building: Access Conex
Location: Solar Ponds
Purpose: DAILY

RWP #: 02-RISS-026

Date: 11/10/02 Time: 16:00

[redacted]

RCT: NA / NA / NA
Print name / Signature / Emp. #

PRN/REN # : NA
Comments: NA

SURVEY RESULTS

Swipe #	Location / Description Results in DPM/100sq.cm	Removable		Total	
		Alpha	Beta	Alpha	Beta
1	Table	<20	<200	<52	<270
2	Table	<20	<200	<52	<270
3	Table	<20	<200	<52	<270
4	Table	<20	<200	<52	<270
5	Table	<20	<200	<52	<270
6	Trash Barrel	<20	<200	<52	<270
7	Trash Barrel	<20	<200	<52	<270
8	Floor	<20	<200	<52	<270
9	Floor	<20	<200	<52	<270
10	Floor	<20	<200	<52	<270
11	Floor	<20	<200	<52	<270
12	Floor	<20	<200	<52	<270
13	Floor	<20	<200	<52	<270
14	Floor	<20	<200	<52	<270
15	Floor	<20	<200	<52	<270
16	NA	NA	NA	NA	NA
17	NA	NA	NA	NA	NA
18	NA	NA	NA	NA	NA
19	NA	NA	NA	NA	NA
20	NA	NA	NA	NA	NA
21	NA	NA	NA	NA	NA
22	NA	NA	NA	NA	NA
23	NA	NA	NA	NA	NA
24	NA	NA	NA	NA	NA
25	NA	NA	NA	NA	NA

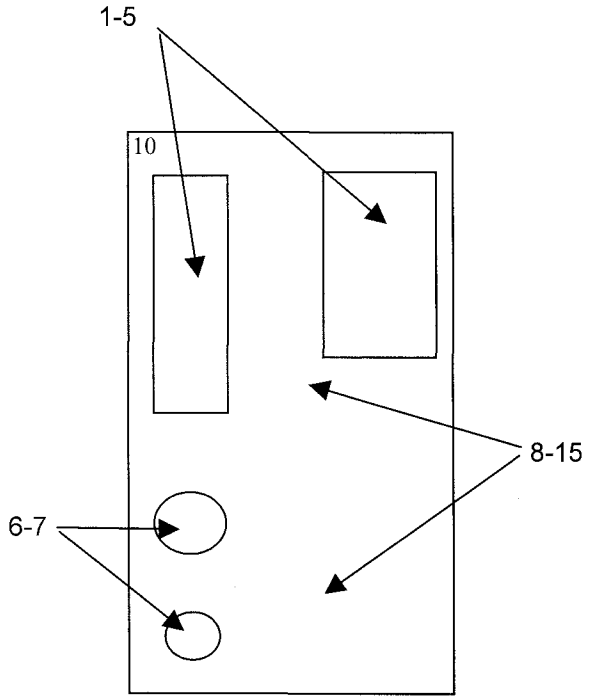

Date Reviewed: 11-11-02 **RS Supervision:** Steve Gernatt / [signature] /
Print Name / Signature

[redacted]

ROCKY FLATS ENVIRONMENTAL TECHNOLOGY SITE

INSTRUMENT DATA

Mfg.	Eberline	Mfg.	NE	Mfg.	NA
Model	SAC 4	Model	Electra	Model	NA
Serial #	959	Serial #	1589	Serial #	NA
Cal Due	1/18/03	Cal Due	4/30/03	Cal Due	NA
Bkg	0.2 cpmα	Bkg	3 cpmα	Bkg	NA cpmα
Efficiency	33.00 %	Efficiency	20.90 %	Efficiency	NA %
MDA	20 dpmα	MDA	52 dpmα	MDA	NA dpmα
Mfg.	Eberline	Mfg.	NE	Mfg.	NA
Model	BC 4	Model	Electra	Model	NA
Serial #	702	Serial #	1589	Serial #	NA
Cal Due	7/22/03	Cal Due	4/30/03	Cal Due	NA
Bkg	32.4 cpmβ	Bkg	367 cpmβ	Bkg	NA cpmβ
Efficiency	25.00 %	Efficiency	34.00 %	Efficiency	NA %
MDA	200 dpmβ	MDA	270 dpmβ	MDA	NA dpmβ

Survey Type: Contamination
Building: General Area
Location: Solar Ponds
Purpose: Daily

RWP #: 02-RISS-026

Date: 11/10/02 Time: 13:00

[redacted]

RCT: NA / NA / NA
Print name / Signature / Emp. #

PRN/REN # : NA
Comments:

SURVEY RESULTS

Swipe #	Location / Description Results in DPM/100sq.cm	Removable Alpha	Removable Beta	Total Alpha	Total Beta
1	BUCKET	< 20	< 200	<52	<270
2	BUCKET	< 20	< 200	<52	<270
3	BUCKET	< 20	< 200	<52	<270
4	BUCKET	< 20	< 200	<52	<270
5	BUCKET	< 20	< 200	<52	<270
6	TRACKS	< 20	< 200	<52	<270
7	TRACKS	< 20	< 200	<52	<270
8	TRACKS	< 20	< 200	<52	<270
9	TRACKS	< 20	< 200	<52	<270
10	TRACKS	< 20	< 200	<52	<270
11	BOOM	< 20	< 200	<52	<270
12	BOOM	< 20	< 200	<52	<270
13	BOOM	< 20	< 200	<52	<270
14	BOOM	< 20	< 200	<52	<270
15	BOOM	< 20	< 200	<52	<270
16	BODY	< 20	< 200	<52	<270
17	BODY	< 20	< 200	<52	<270
18	BODY	< 20	< 200	<52	<270
19	BODY	< 20	< 200	<52	<270
20	BODY	< 20	< 200	<52	<270
21	CAB	< 20	< 200	<52	<270
22	CAB	< 20	< 200	<52	<270
23	CAB	< 20	< 200	<52	<270
24	CAB	< 20	< 200	<52	<270
25	CAB	< 20	< 200	<52	<270

MAP

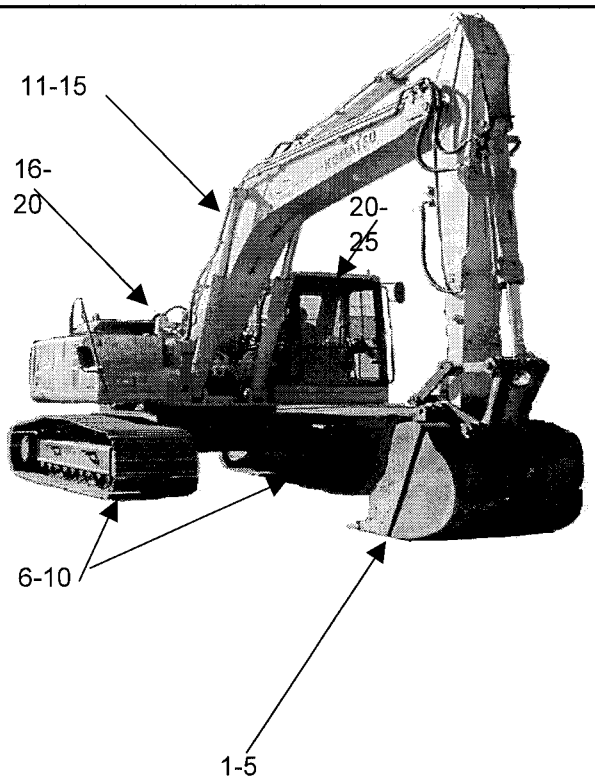

Date Reviewed: 11-1-02 **RS Supervision:** Steve Gernatt / [redacted]
Print Name / Signature

ROCKY FLATS ENVIRONMENTAL TECHNOLOGY SITE

INSTRUMENT DATA

Mfg.	Eberline	Mfg.	Eberline	Mfg.	NE Electra
Model	SAC-4	Model	BC-4	Model	DP-6
Serial #	959	Serial #	702	Serial #	3110
Cal Due	1/18/03	Cal Due	7/22/03	Cal Due	11/29/02
Bkg	0 cpmα	Bkg	35.7 cpmβ	Bkg	2 cpmα
Eff.	33 %	Eff.	25 %	Eff.	21.5 %
MDA	20 dpmα	MDA	200 dpmβ	MDA	43 dpmα

Mfg.	Eberline	Mfg.	Eberline	Mfg.	NE Electra
Model	SAC-4	Model	BC-4	Model	DP-6
Serial #	N/A	Serial #	N/A	Serial #	3110
Cal Due	N/A	Cal Due	N/A	Cal Due	11/29/02
Bkg	cpmα	Bkg	cpmβ	Bkg	454 cpmβ
Eff.	33 %	Eff.	25 %	Eff.	32.4 %
MDA	20 dpmα	MDA	200 dpmβ	MDA	314 dpmβ

Survey Type: Contamination
Building: Solar Ponds
Location: west of A pond, and east of B ponds
Purpose: Acceptance baseline of Frac Tanks

RWP #: 02-RISS-020

Date: 11/8/02 Time: 0900

RCT: NA / NA / NA

[redacted]

PRN/REN # : NA
Comments:

SURVEY RESULTS

Swipe #	LOCATION	ALPHA Swipe dpm/100cm2	ALPHA Direct dpm/100cm2	ALPHA Wipe dpm/wipe	BETA Swipe dpm/100cm2	BETA Direct dpm/100cm2	BETA Wipe dpm/wipe
1	see map	<20	<43	NA	<200	<314	NA
2	see map	<20	<43		<200	<314	
3	see map	<20	<43		<200	<314	
4	see map	<20	<43		<200	<314	
5	see map for sample point on FADW4721L only	<20	<43		<200	<314	
NA		NA	NA		NA	NA	
NA	NA	NA	NA	NA	NA	NA	NA

Date Reviewed: 11/29/02 **RS Supervision:** [redacted]
Print Name Signature

284

Drawing Showing Survey Points

Survey is typical of 5 Frac tank trucks: SV21601L,255543,255612,255268 and FADW4721L

Surveys taken at back edge of tank due to being the most likely location of precipitates or accumulation of activity

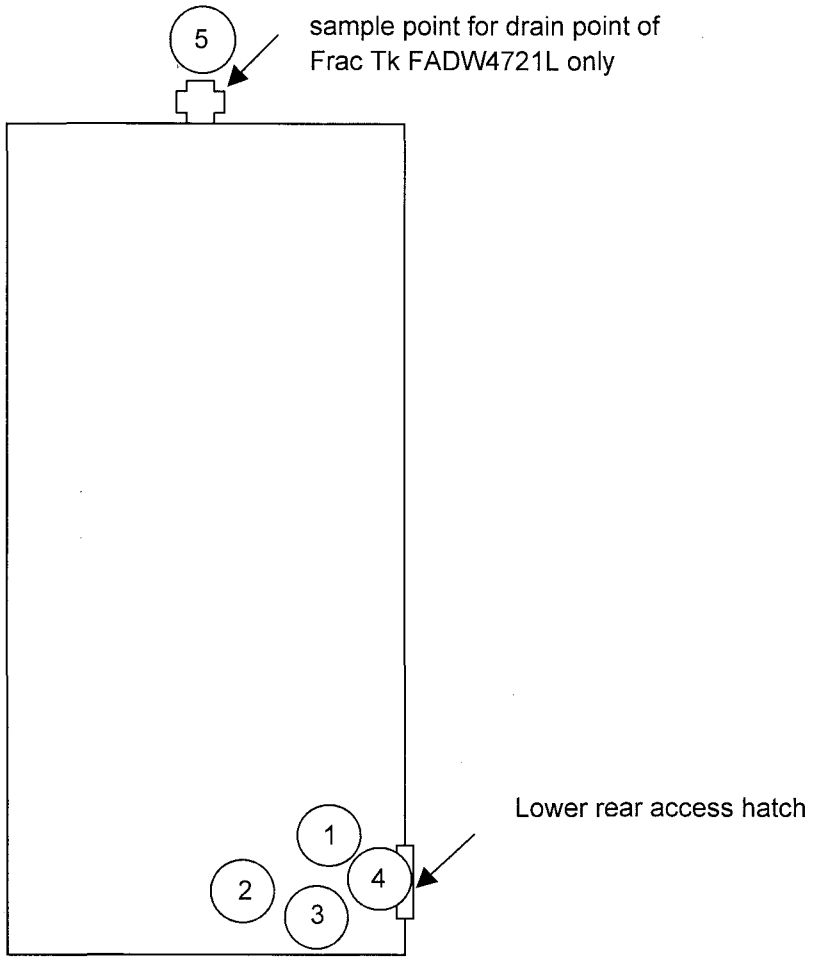

ROCKY FLATS ENVIRONMENTAL TECHNOLOGY SITE

INSTRUMENT DATA

Mfg.	Eberline	Mfg.	Eberline	Mfg.	NE Electra
Model	SAC-4	Model	BC-4	Model	DP-6
Serial #	959	Serial #	702	Serial #	3110
Cal Due	1/18/03	Cal Due	7/22/03	Cal Due	11/29/02
Bkg	1.6 cpmα	Bkg	33.6 cpmβ	Bkg	2 cpmα
Eff.	33 %	Eff.	25 %	Eff.	21.5 %
MDA	20 dpmα	MDA	200 dpmβ	MDA	43 dpmα

Mfg.	Eberline	Mfg.	Eberline	Mfg.	NE Electra
Model	SAC-4	Model	BC-4	Model	DP-6
Serial #	N/A	Serial #	N/A	Serial #	3110
Cal Due	N/A	Cal Due	N/A	Cal Due	11/29/02
Bkg	cpmα	Bkg	cpmβ	Bkg	454 cpmβ
Eff.	33 %	Eff.	25 %	Eff.	32.4 %
MDA	20 dpmα	MDA	200 dpmβ	MDA	314 dpmβ

Survey Type: Contamination
Building: Solar Ponds
Location: East of B ponds
Purpose: Acceptance baseline of scrapers

RWP #: 02-RISS-020

Date: 11/7/02 Time: 1400

[redacted]

RCT: NA / NA / NA
Print name / Signature / Emp. #

PRN/REN # : NA
Comments:

SURVEY RESULTS

Swipe #	LOCATION	ALPHA Swipe dpm/100cm2	ALPHA Direct dpm/100cm2	ALPHA Wipe dpm/wipe	BETA Swipe dpm/100cm2	BETA Direct dpm/100cm2	BETA Wipe dpm/wipe
1	cab interior and pedals	<20	<43	NA	<200	<314	NA
2	air intake grill	<20	<43		<200	<314	
3	front L tire	<20	<43		<200	<314	
4	front R tire	<20	<43		<200	<314	
5	hydraulic pump and pan	<20	<43		<200	<314	
6	3rd blade from bottom	<20	<43		<200	<314	
7	bottom blade	<20	<43		<200	<314	
8	lower R cutting edge	<20	<43		<200	<314	
9	rear R tire	<20	<43		<200	<314	
10	rear L tire	<20	<43		<200	<314	
NA	NA	NA	NA		NA	NA	
NA	NA	NA	NA	NA	NA	NA	NA

Date Reviewed: 11/7/02 **RS Supervision:** [redacted]
Print Name / Signature

286

Drawing Showing Survey Points

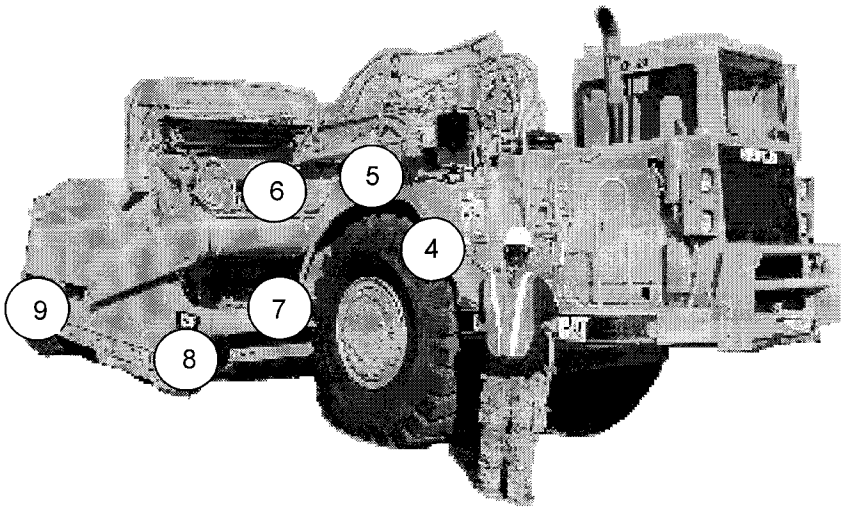

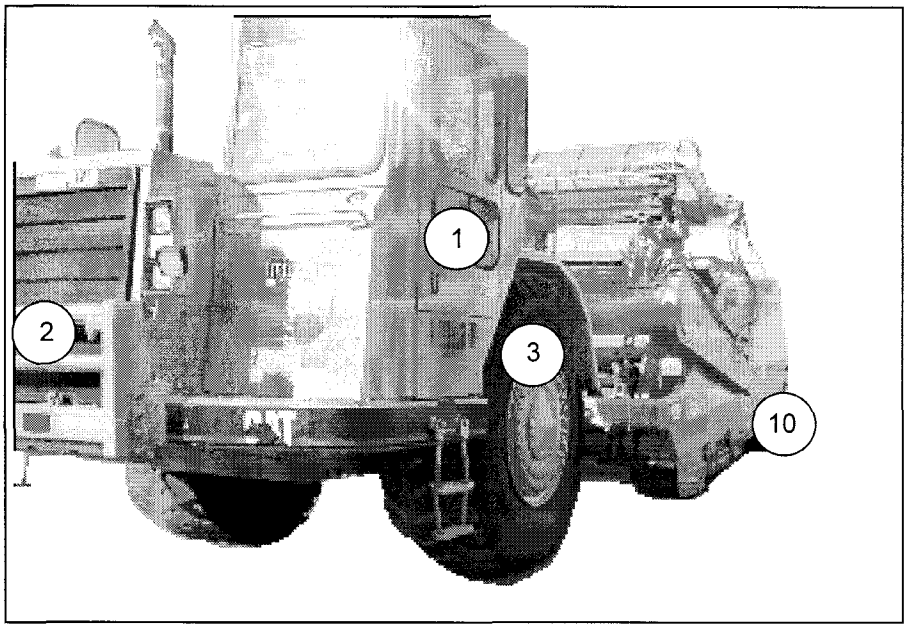

Survey is typical of 3 Cat 623E scrapers: 93-017, 93-028 and Colo # TE11779

287

ROCKY FLATS ENVIRONMENTAL TECHNOLOGY SITE

INSTRUMENT DATA

Mfg.	Eberline	Mfg.	Eberline	Mfg.	NE Electra
Model	SAC-4	Model	BC-4	Model	DP-6
Serial #	959	Serial #	700	Serial #	3110
Cal Due	1/18/02	Cal Due	12/13/02	Cal Due	11/29/02
Bkg	0.3 cpmα	Bkg	35.8 cpmβ	Bkg	2 cpmα
Eff.	33 %	Eff.	25 %	Eff.	22.0 %
MDA	20 dpmα	MDA	200 dpmβ	MDA	42 dpmα

Mfg.	Eberline	Mfg.	Eberline	Mfg.	NE Electra
Model	SAC-4	Model	BC-4	Model	DP-6
Serial #	NA	Serial #	NA	Serial #	3110
Cal Due		Cal Due		Cal Due	11/29/02
Bkg	cpmα	Bkg	cpmβ	Bkg	402 cpmβ
Eff.	%	Eff.	%	Eff.	32.5 %
MDA	NA dpmα	MDA	NA dpmβ	MDA	295 dpmβ

Survey Type: Contamination

Building: Solar Ponds

Location: general area

Purpose: moving from B ponds CA to A pond CA

RWP #: 02-RISS-026

Date: 11/5/02 Time: ~~0945~~ 1600

[redacted]

RCT: NA / NA / NA

Print name Signature Emp. #

PRN/REN # : NA

Comments:

SURVEY RESULTS

Swipe #	LOCATION	ALPHA Swipe dpm/100cm2	ALPHA Direct dpm/100cm2	ALPHA Wipe dpm/wipe	BETA Swipe dpm/100cm2	BETA Direct dpm/100cm2	BETA Wipe dpm/wipe
1	top interior of bucket, left	< 20	<42	NA	< 200	<295	NA
2	top interior of bucket, center	< 20	<42	NA	< 200	<295	NA
3	top interior of bucket, right	< 20	<42	NA	< 200	<295	NA
4	lower interior of bucket, left	< 20	<42	NA	< 200	<295	NA
5	lower interior of bucket, right	< 20	<42	NA	< 200	<295	NA
6	lower interior of bucket, center	< 20	<42	NA	< 200	<295	NA
7	left exterior of bucket	< 20	<42	NA	< 200	<295	NA
8	right exterior of bucket	< 20	<42	NA	< 200	<295	NA
9	teeth of bucket, left	< 20	<42	NA	< 200	<295	NA
10	teeth of bucket,right	< 20	<42	NA	< 200	<295	NA
NA	NA	NA	NA	NA	NA	NA	NA
NA	NA	NA	NA	NA	NA	NA	NA
NA	NA	NA	NA	NA	NA	NA	NA
NA	NA	NA	NA	NA	NA	NA	NA
NA	NA	NA	NA	NA	NA	NA	NA
NA	NA	NA	NA	NA	NA	NA	NA
NA	NA	NA	NA	NA	NA	NA	NA
NA	NA	NA	NA	NA	NA	NA	NA
NA	NA	NA	NA	NA	NA	NA	NA
NA	NA	NA	NA	NA	NA	NA	NA

Date Reviewed: 11/29/02 **RS Supervision:** [signature] / [signature] [redacted]

Print Name Signature

288

Drawing Showing Survey Points

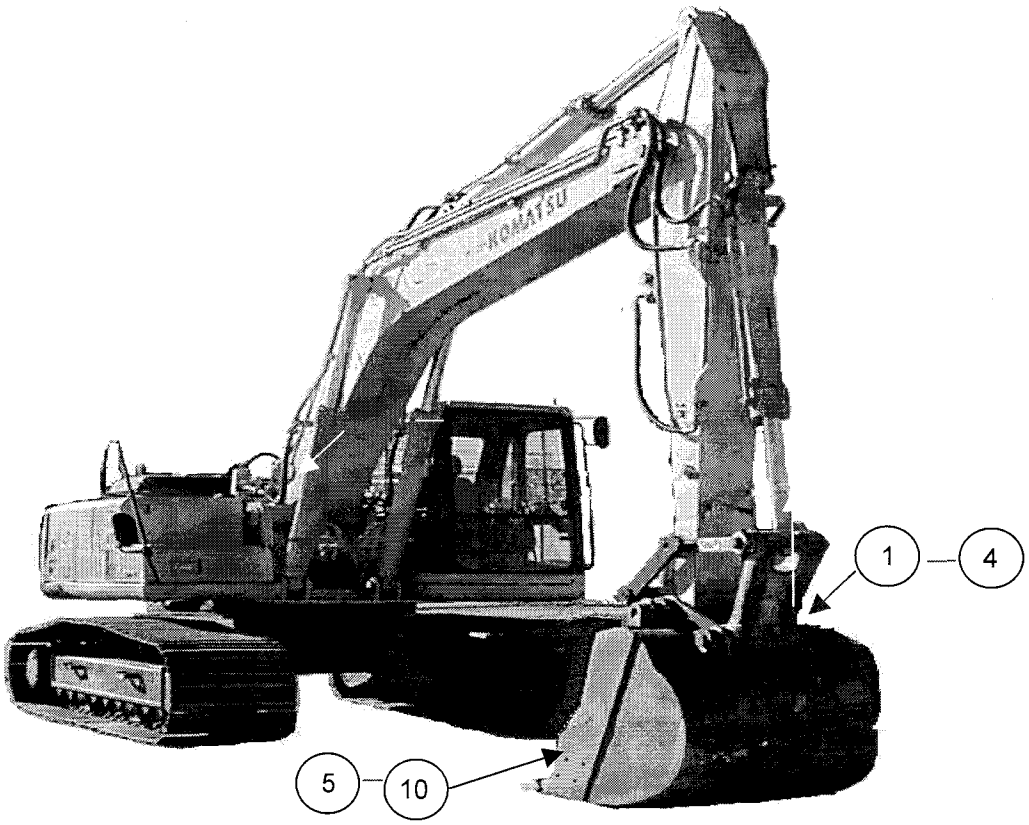

289

ROCKY FLATS ENVIRONMENTAL TECHNOLOGY SITE

INSTRUMENT DATA

Mfg.	Eberline	Mfg.	Eberline	Mfg.	NE Electra
Model	SAC-4	Model	BC-4	Model	DP-6
Serial #	959	Serial #	700	Serial #	3110
Cal Due	1/18/02	Cal Due	12/13/02	Cal Due	11/29/02
Bkg	0.4 cpmα	Bkg	32.3 cpmβ	Bkg	1 cpmα
Eff.	33 %	Eff.	25 %	Eff.	22.0 %
MDA	20 dpmα	MDA	200 dpmβ	MDA	33 dpmα
Mfg.	Eberline	Mfg.	Eberline	Mfg.	NE Electra
Model	SAC-4	Model	BC-4	Model	DP-6
Serial #	NA	Serial #	NA	Serial #	3110
Cal Due		Cal Due		Cal Due	11/29/02
Bkg	cpmα	Bkg	cpmβ	Bkg	287 cpmβ
Eff.	%	Eff.	%	Eff.	32.5 %
MDA	NA dpmα	MDA	NA dpmβ	MDA	251 dpmβ

Survey Type: Contamination
Building: 788
Location: general area
Purpose: daily

RWP #: 02-RISS-020

Date: 11/5/02 Time: 0945

[redacted]

RCT: NA / NA / NA
Print name Signature Emp. #

PRN/REN # : NA
Comments:

SURVEY RESULTS

Swipe #	LOCATION	ALPHA Swipe dpm/100cm2	ALPHA Direct dpm/100cm2	ALPHA Wipe dpm/wipe	BETA Swipe dpm/100cm2	BETA Direct dpm/100cm2	BETA Wipe dpm/wipe
1	dozer blade	< 20	< 33	NA	< 200	< 251	NA
2	dozer blade	< 20	< 33	NA	< 200	< 251	NA
3	dozer blade	< 20	< 33	NA	< 200	< 251	NA
4	dozer blade	< 20	< 33	NA	< 200	< 251	NA
5	dozer tracks	< 20	< 33	NA	< 200	< 251	NA
6	dozer tracks	< 20	< 33	NA	< 200	< 251	NA
7	dozer tracks	< 20	< 33	NA	< 200	< 251	NA
8	dozer tracks	< 20	< 33	NA	< 200	< 251	NA
9	dozer tracks	< 20	< 33	NA	< 200	< 251	NA
10	dozer tracks	< 20	< 33	NA	< 200	< 251	NA
NA	NA	NA	NA	NA	NA	NA	NA
NA	NA	NA	NA	NA	NA	NA	NA
NA	NA	NA	NA	NA	NA	NA	NA
NA	NA	NA	NA	NA	NA	NA	NA
NA	NA	NA	NA	NA	NA	NA	NA
NA	NA	NA	NA	NA	NA	NA	NA
NA	NA	NA	NA	NA	NA	NA	NA
NA	NA	NA	NA	NA	NA	NA	NA
NA	NA	NA	NA	NA	NA	NA	NA
NA	NA	NA	NA	NA	NA	NA	NA

Date Reviewed: 11/29/02 **RS Supervision:** S Eggett / [redacted]
Print Name Signature

290

Drawing Showing Survey Points

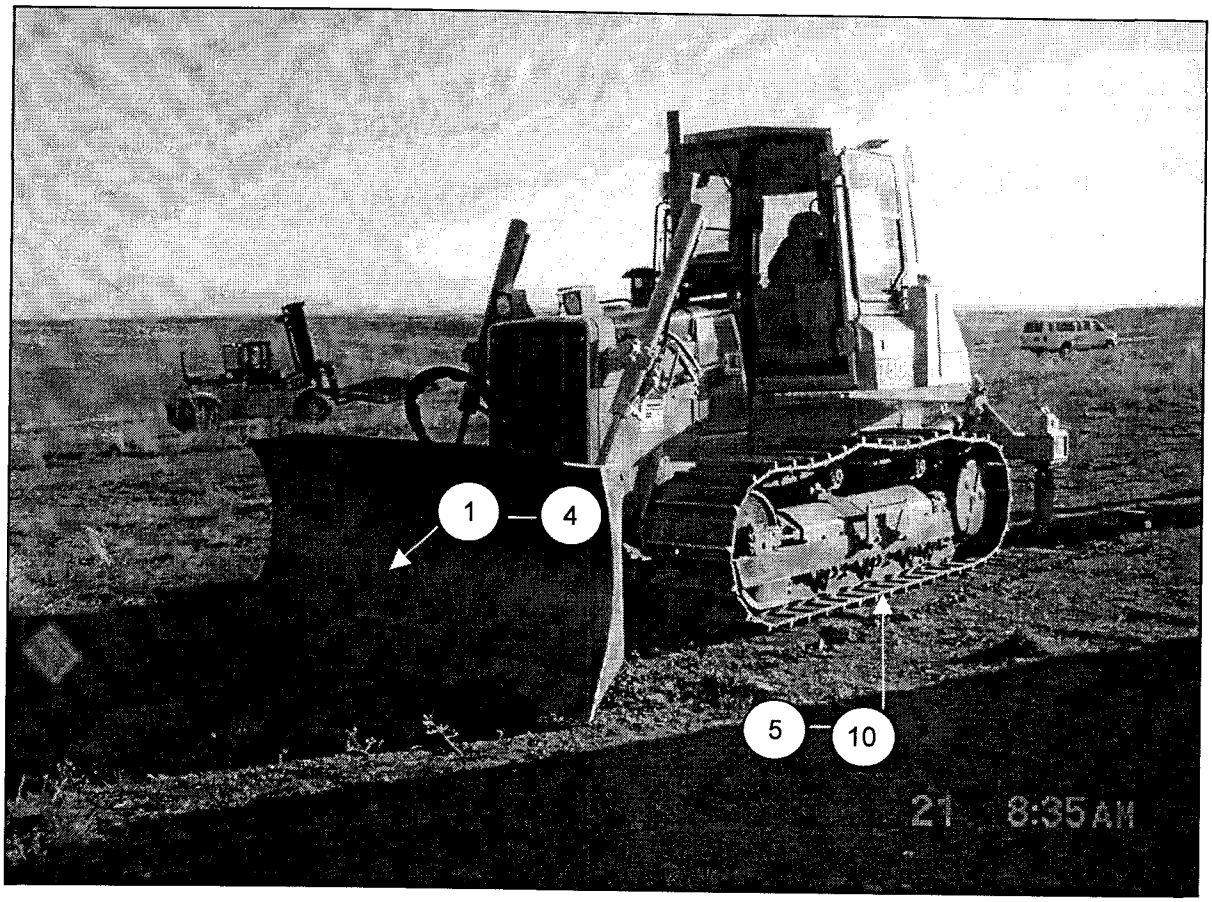

291

ROCKY FLATS ENVIRONMENTAL TECHNOLOGY SITE

INSTRUMENT DATA

Mfg.	Eberline	Mfg.	Eberline	Mfg.	NE Electra
Model	SAC-4	Model	BC-4	Model	DP-6
Serial #	959	Serial #	700	Serial #	3110
Cal Due	1/18/02	Cal Due	12/13/02	Cal Due	11/29/02
Bkg	0.3 cpmα	Bkg	35.8 cpmβ	Bkg	2 cpmα
Eff.	33 %	Eff.	25 %	Eff.	22.0 %
MDA	20 dpmα	MDA	200 dpmβ	MDA	42 dpmα
Mfg.	Eberline	Mfg.	Eberline	Mfg.	NE Electra
Model	SAC-4	Model	BC-4	Model	DP-6
Serial #	NA	Serial #	NA	Serial #	3110
Cal Due		Cal Due		Cal Due	11/29/02
Bkg	cpmα	Bkg	cpmβ	Bkg	402 cpmβ
Eff.	%	Eff.	%	Eff.	32.5 %
MDA	NA dpmα	MDA	NA dpmβ	MDA	295 dpmβ

Survey Type: Contamination
Building: 788
Location: general area
Purpose: daily
RWP #: 02-RISS-020
Date: 11/4/02 Time: 1500
[redacted]
RCT: NA / NA / NA
Print name / Signature / Emp. #

PRN/REN # : NA
Comments:

SURVEY RESULTS

Swipe #	LOCATION	ALPHA Swipe dpm/100cm2	ALPHA Direct dpm/100cm2	ALPHA Wipe dpm/wipe	BETA Swipe dpm/100cm2	BETA Direct dpm/100cm2	BETA Wipe dpm/wipe
1	dozer blade	< 20	< 42	NA	< 200	< 295	NA
2	dozer blade	< 20	< 42	NA	< 200	< 295	NA
3	dozer blade	< 20	< 42	NA	< 200	< 295	NA
4	dozer blade	< 20	< 42	NA	< 200	< 295	NA
5	dozer tracks	< 20	< 42	NA	< 200	< 295	NA
6	dozer tracks	< 20	< 42	NA	< 200	< 295	NA
7	dozer tracks	< 20	< 42	NA	< 200	< 295	NA
8	dozer tracks	< 20	< 42	NA	< 200	< 295	NA
9	dozer tracks	< 20	< 42	NA	< 200	< 295	NA
10	dozer tracks	< 20	< 42	NA	< 200	< 295	NA
NA	NA	NA	NA	NA	NA	NA	NA
NA	NA	NA	NA	NA	NA	NA	NA
NA	NA	NA	NA	NA	NA	NA	NA
NA	NA	NA	NA	NA	NA	NA	NA
NA	NA	NA	NA	NA	NA	NA	NA
NA	NA	NA	NA	NA	NA	NA	NA
NA	NA	NA	NA	NA	NA	NA	NA
NA	NA	NA	NA	NA	NA	NA	NA
NA	NA	NA	NA	NA	NA	NA	NA
NA	NA	NA	NA	NA	NA	NA	NA

Date Reviewed: 11/29/02 **RS Supervision:** [redacted]
Print Name / Signature

292

Drawing Showing Survey Points

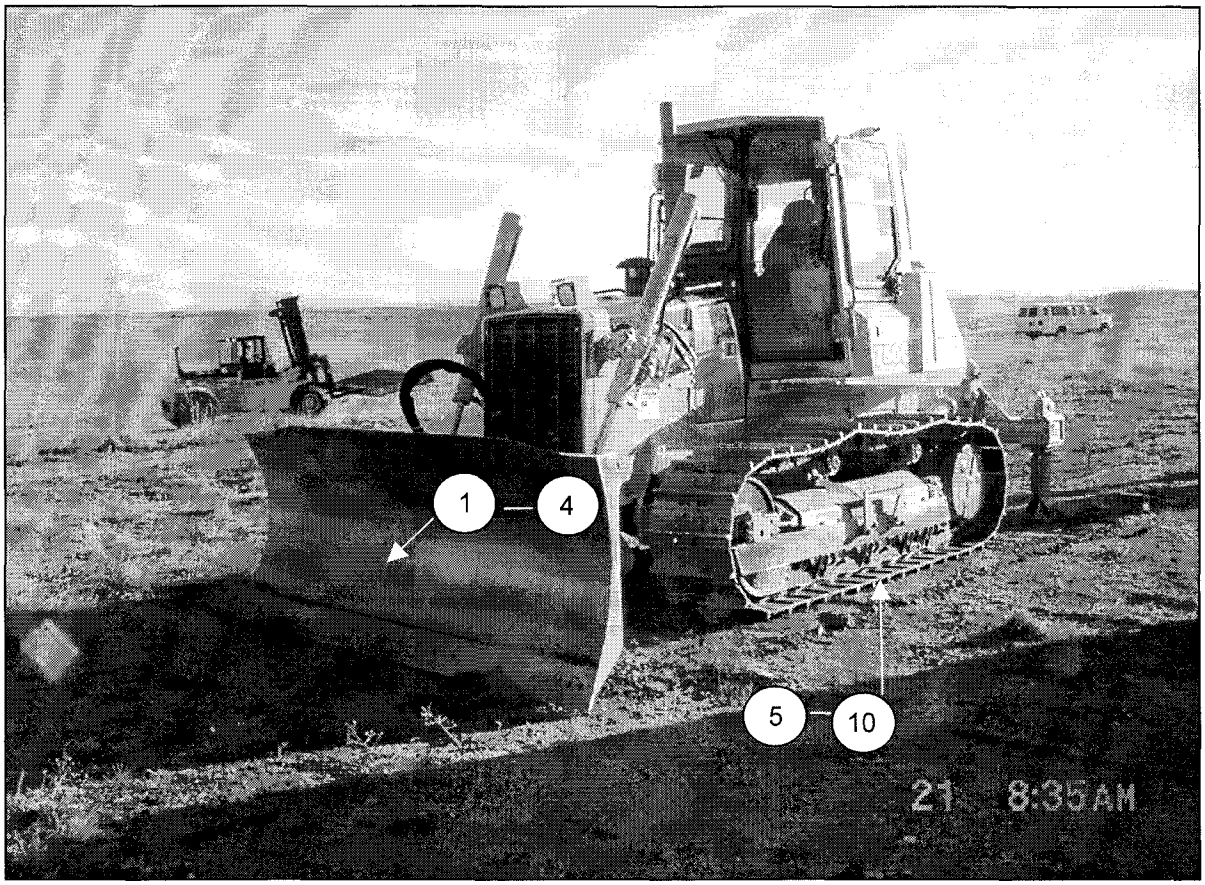

293

ROCKY FLATS ENVIRONMENTAL TECHNOLOGY SITE

INSTRUMENT DATA

Mfg.	Ludlum	Mfg.	Ludlum	Mfg.	NE Electra
Model	2929	Model	2929	Model	DP-6
Serial #	147727	Serial #	NA	Serial #	3252
Cal Due	1/12/03	Cal Due	NA	Cal Due	2/6/03
Bkg.	0.5 cpm α	Bkg.	NA cpm α	Bkg.	6 cpm α
Efficiency	33.5 %	Efficiency	NA %	Efficiency	21.8 %
MDA	18 dpm α	MDA	NA dpm α	MDA	65 dpm α
Mfg.	Ludlum	Mfg.	Ludlum	Mfg.	NE Electra
Model	2929	Model	2929	Model	DP-6
Serial #	147727	Serial #	NA	Serial #	3248
Cal Due	1/12/03	Cal Due	NA	Cal Due	2/6/03
Bkg.	58.7 cpm β	Bkg.	NA cpm β	Bkg.	431 cpm β
Efficiency	42.9 %	Efficiency	NA %	Efficiency	31.6 %
MDA	205 dpm α	MDA	NA dpm α	MDA	314 dpm β

Survey type: Contamination
Building: Solar Ponds
Location: Solar Ponds
Purpose: Release
RWP #: NA
Date: 12/24/02 Time: 1100

[redacted]

PRN/REN # : NA
Comments:
Surveyed frack tank access door and all accessible areas inside. All results were < MDA. Serial # 255612

SURVEY RESULTS

Swipe #	LOCATION/DESCRIPTION	ALPHA Swipe	ALPHA Direct	ALPHA Wipe	BETA Swipe	BETA Direct	BETA Wipe
		dpm/100cm2	dpm/100cm2	dpm/wipe	dpm/100cm2	dpm/100cm2	dpm/wipe
1	Access portal/accessible areas	<18	<65	NA	<205	<314	NA
2	Access portal/accessible areas	<18	<65		<205	<314	
3	Access portal/accessible areas	<18	<65		<205	<314	
4	Access portal/accessible areas	<18	<65		<205	<314	
5	Access portal/accessible areas	<18	<65		<205	<314	
6	Access portal/accessible areas	<18	<65		<205	<314	
7	NA	NA	NA		NA	NA	
8							
9							
10							
11							
12							
13							
14							
15							
16							
17							
18							
19	↓	↓	↓	↓	↓	↓	↓
20	NA	NA	NA	NA	NA	NA	NA

Date Reviewed: 12/24/02 **RS Supervision:** James A Smith / [redacted]
Print Name Signature

294

ROCKY FLATS ENVIRONMENTAL TECHNOLOGY SITE

INSTRUMENT DATA

Mfg.	Ludlum	Mfg.	NE Electra	Mfg.	NE Electra
Model	2929	Model	DP-6	Model	DP-6
Serial #	147727	Serial #	3252	Serial #	NA
Cal Due	1/12/03	Cal Due	2/6/03	Cal Due	NA
Bkg	0.2 cpmα	Bkg	5 cpmα	Bkg	NA cpmα
Efficiency	33.50 %	Efficiency	21.80 %	Efficiency	NA %
MDA	18 dpmα	MDA	60 dpmα	MDA	NA dpmα
Mfg.	Ludlum	Mfg.	NE Electra	Mfg.	NE Electra
Model	2929	Model	DP-6	Model	DP-6
Serial #	147727	Serial #	3252	Serial #	NA
Cal Due	1/12/03	Cal Due	2/6/03	Cal Due	NA
Bkg	55.6 cpmβ	Bkg	426 cpmβ	Bkg	NA cpmβ
Efficiency	42.90 %	Efficiency	31.60 %	Efficiency	NA %
MDA	205 dpmβ	MDA	312 dpmβ	MDA	NA dpmβ

Survey Type: Contamination
Building: Solar Ponds
Location: Solar Ponds
Purpose: Release

RWP #: NA

Date: 12/20/02 Time: 1100

[redacted]

PRN/REN # :

Comments: Surveyed the inside of the door hatch, and also all accessible areas immediately inside the hatch. All results <MDA. Survey of Fracktanker #254979.

SURVEY RESULTS

Swipe #	Location / Description Results in DPM/100sq.cm	Removable Alpha	Removable Beta	Total Alpha	Total Beta
1	access portal	<18	<205	<60	<312
2	access portal	<18	<205	<60	<312
3	access portal	<18	<205	<60	<312
4	access portal	<18	<205	<60	<312
5	access portal	<18	<205	<60	<312
6	access portal	<18	<205	<60	<312
NA	NA	NA	NA	NA	NA
NA	NA	NA	NA	NA	NA

Map

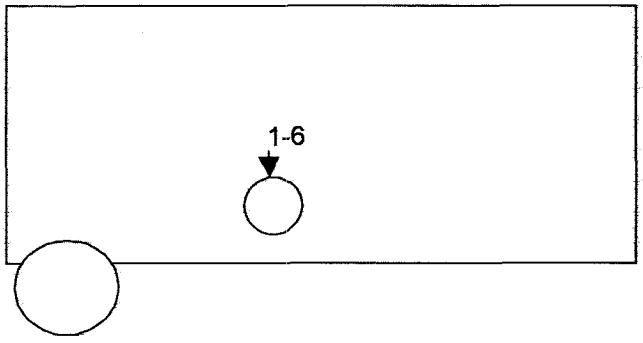

Date Reviewed: 12-20-02 **RS Supervision:** James Smith [redacted]
Print Name Signature

ROCKY FLATS ENVIRONMENTAL TECHNOLOGY SITE

INSTRUMENT DATA

Mfg.	Ludlum	Mfg.	Eberline	Mfg.	NE Electra
Model	2929	Model	SAC-4	Model	DP-6
Serial #	147727	Serial #	NA	Serial #	1589
Cal Due	1/12/03	Cal Due		Cal Due	4/30/03
Bkg	0.2 cpmα	Bkg	cpmα	Bkg	4 cpmα
Eff.	33.5 %	Eff.	%	Eff.	21.5 %
MDA	18 dpmα	MDA	NA dpmα	MDA	56 dpmα
Mfg.	Ludlum	Mfg.	Eberline	Mfg.	NE Electra
Model	2929	Model	BC-4	Model	DP-6
Serial #	147727	Serial #	NA	Serial #	1589
Cal Due	1/12/03	Cal Due		Cal Due	4/30/03
Bkg	61.3 cpmβ	Bkg	cpmβ	Bkg	442 cpmβ
Eff.	42.9 %	Eff.	%	Eff.	31.5 %
MDA	205 dpmβ	MDA	NA dpmβ	MDA	319 dpmβ

Survey Type: Contamination
Building: Solar Ponds
Location: Solar Ponds
Purpose: Release offsite to rental company

RWP #: NA

Date: 12/16/02 Time: 1415

[redacted]

RCT: NA / NA / NA
Print name / Signature / Emp. #

PRN/REN # : NA

Comments: Komatsu Loader owned by Envirocon #3398 surveyed prior to going to another project on site. Spot scanned suspect areas including the bottom. No detectable counts noted above background for alpha or beta contamination. Picture on page two is of a simular loader by another company.

SURVEY RESULTS

Swipe #	LOCATION	ALPHA Swipe dpm/100cm2	ALPHA Direct dpm/100cm2	ALPHA Wipe dpm/wipe	BETA Swipe dpm/100cm2	BETA Direct dpm/100cm2	BETA Wipe dpm/wipe
1	controls	< 18	< 56	NA	< 205	< 319	NA
2	controls	< 18	< 56	NA	< 205	< 319	NA
3	controls	< 18	< 56	NA	< 205	< 319	NA
4	controls	< 18	< 56	NA	< 205	< 319	NA
5	tire	< 18	< 56	NA	< 205	< 319	NA
6	opposite tire	< 18	< 56	NA	< 205	< 319	NA
7	tire	< 18	< 56	NA	< 205	< 319	NA
8	opposite tire	< 18	< 56	NA	< 205	< 319	NA
9	back of bucket	< 18	< 56	NA	< 205	< 319	NA
10	inside bucket	< 18	< 56	NA	< 205	< 319	NA
11	inside bucket	< 18	< 56	NA	< 205	< 319	NA
12	air cleaner	< 18	< 56	NA	< 205	< 319	NA
13	radiator	< 18	< 56	NA	< 205	< 319	NA
14	middle of loader	< 18	< 56	NA	< 205	< 319	NA
15	middle of loader	< 18	< 56	NA	< 205	< 319	NA
NA	NA	NA	NA	NA	NA	NA	NA
NA	NA	NA	NA	NA	NA	NA	NA
NA	NA	NA	NA	NA	NA	NA	NA
NA	NA	NA	NA	NA	NA	NA	NA
NA	NA	NA	NA	NA	NA	NA	NA

Date Reviewed: 12-16-02 **RS Supervision:** James W Smith / James W Smith [redacted]
Print Name / Signature

296

ROCKY FLATS ENVIRONMENTAL TECHNOLOGY SITE

Drawing Showing Survey Points

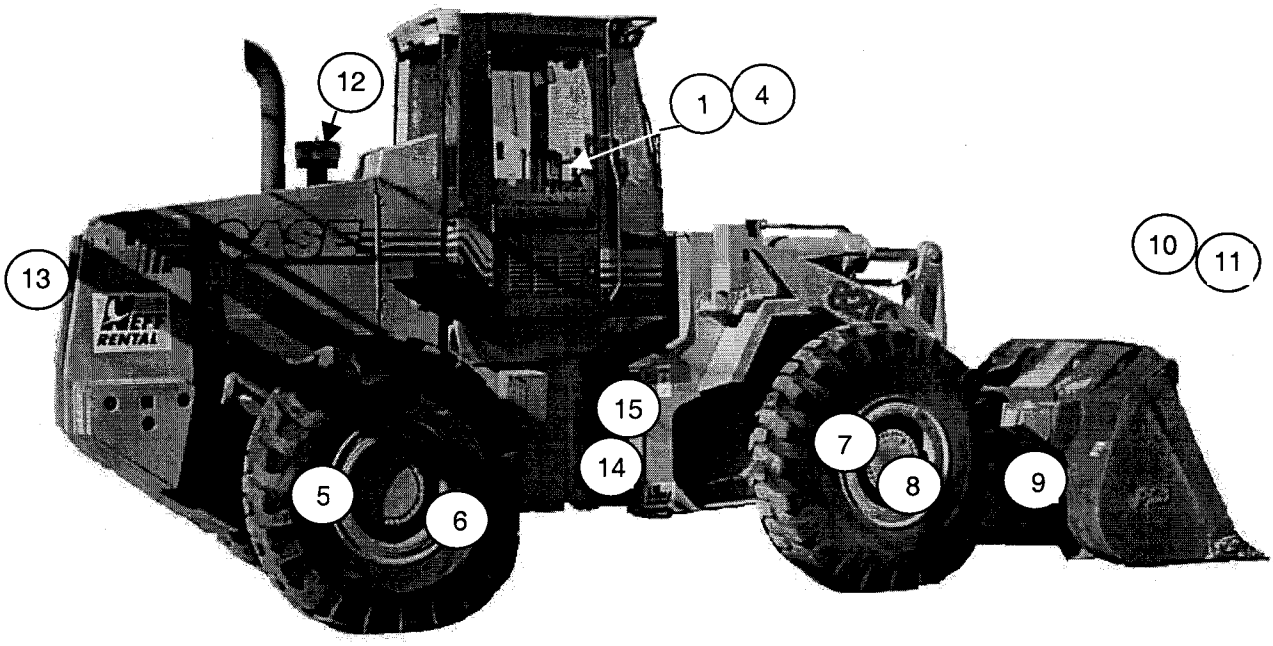

297

RADIOACTIVE MATERIAL (RAM) PACKAGE SURVEY FORM

Location:	East of B solar ponds	Date:	12/13/02	Time:	1000

RWP # NA

Survey Instrument Data:

Mfg:	Bicron	Ludlum	Ludlum	NA	NA
Model:	Microrem	2929	2929	NA	NA
Serial #:	B982H	147727	147727	NA	NA
Cal Due Date:	2/12/03	1/12/03	1/12/03	NA	NA
Background:	< 0.01mrem/hr.	0.3	32.6	NA	NA
Efficiency:	NA	34%	25%	NA	NA
MDA	0.017 mrem/hr	18 dpm	200 dpm	NA	NA

Reason for Survey: Pre shipping to envirocare

Contamination (dpm/300 cm2)					**Radiation (mrem/hr)**						
Swipe #	Removable		Total		Package Exterior Contact and @ 1m						
	Alpha	Beta/Gamma	Alpha	Beta/Gamma		β/γ		Neutron		Total	
						Cont.	@1m	Cont.	@1m	Cont.	@1m
1	< 18	< 205	NA	NA	1	< 0.017	< 0.017	0	0	< 0.017	< 0.017
2	< 18	< 205	NA	NA	2	< 0.017	< 0.017	0	0	< 0.017	< 0.017
3	< 18	< 205	NA	NA	3	< 0.017	< 0.017	0	0	< 0.017	< 0.017
4	< 18	< 205	NA	NA	4	< 0.017	< 0.017	0	0	< 0.017	< 0.017
5	< 18	< 205	NA	NA	5	< 0.017	< 0.017	0	0	< 0.017	< 0.017
6	< 18	< 205	NA	NA	6	< 0.017	< 0.017	0	0	< 0.017	< 0.017
7	< 18	< 205	NA	NA	7	< 0.017	< 0.017	0	0	< 0.017	< 0.017
8	< 18	< 205	NA	NA	8	< 0.017	< 0.017	0	0	< 0.017	< 0.017
NA	NA	NA	NA	NA	NA	NA	NA	NA	NA	NA	NA
NA	NA	NA	NA	NA	NA	NA	NA	NA	NA	NA	NA
NA	NA	NA	NA	NA	NA	NA	NA	NA	NA	NA	NA
NA	NA	NA	NA	NA	NA	NA	NA	NA	NA	NA	NA

***Drawing Showing Survey Points**

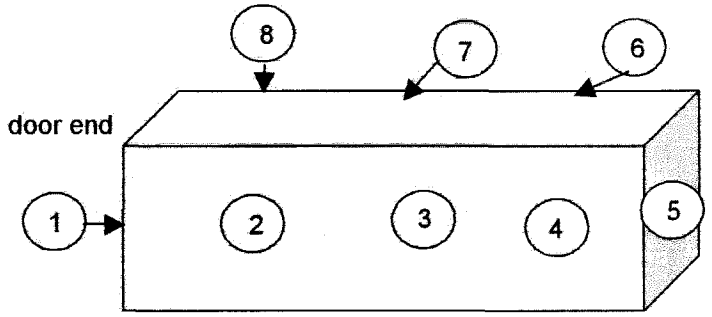

This survey is of the intermodal container that is ready to be shipped from the solar ponds. The WEMS numbers is L00897.

NOTE: Radiation readings are the highest for each distinct plane.

Performed by:	M. Simmers	/ Matt Simmers /	[redacted]	/ 12/13/02
Name (Print)		Signature		Date
Approved by: RS Supervision:	James W Smith	/ James W Smith /	[redacted]	12/13/02
Name (Print)		Signature		Date

ROCKY FLATS ENVIRONMENTAL TECHNOLOGY SITE

INSTRUMENT DATA

Mfg.	Ludlum	Mfg.	Ludlum	Mfg.	NE Electra
Model	2929	Model	2929	Model	DP-6
Serial #	105885	Serial #	147727	Serial #	1429
Cal Due	3/26/03	Cal Due	1/12/03	Cal Due	5/11/03
Bkg	0.2 cpmα	Bkg	0.3 cpmα	Bkg	0 cpmα
Eff.	36.9 %	Eff.	33.5 %	Eff.	20.9 %
MDA	18 dpmα	MDA	18 dpmα	MDA	13 dpmα
Mfg.	Ludlum	Mfg.	Ludlum	Mfg.	NE Electra
Model	2929	Model	2929	Model	DP-6
Serial #	105885	Serial #	147727	Serial #	1429
Cal Due	3/26/03	Cal Due	1/12/03	Cal Due	5/11/03
Bkg	59.2 cpmβ	Bkg	56 cpmβ	Bkg	423 cpmβ
Eff.	38.3 %	Eff.	42.9 %	Eff.	29 %
MDA	205 dpmβ	MDA	205 dpmβ	MDA	339 dpmβ

Survey Type: Contamination

Building: 335

Location: 335

Purpose: Sent to offsite landfill

RWP #: NA

Date: 12/13/02 Time: 1245

[redacted]

RCT: NA / NA / NA

Print name Signature Emp. #

PRN/REN # :

Comments: Survey performed at the request of the Radiological Engineer for shipment to sanitary landfill. Scanned all accessible areas of the sump and associated piping no detectable counts found above background for alpha or beta contamination.

SURVEY RESULTS

Swipe #	LOCATION	ALPHA Swipe dpm/100cm2	ALPHA Direct dpm/100cm2	ALPHA Wipe dpm/wipe	BETA Swipe dpm/100cm2	BETA Direct dpm/100cm2	BETA Wipe dpm/wipe
1	Cast drain pipe	< 18	< 13	NA	< 205	< 339	NA
2	Cast drain pipe	< 18	< 13	NA	< 205	< 339	NA
3	Inside of cast pipe	< 18	< 13	NA	< 205	< 339	NA
4	sump	< 18	< 13	NA	< 205	< 339	NA
5	Inside of sump	< 18	< 13	NA	< 205	< 339	NA
6	sump	< 18	< 13	NA	< 205	< 339	NA
7	sump pump	< 18	< 13	NA	< 205	< 339	NA
8	plastic pipe	< 18	< 13	NA	< 205	< 339	NA
NA	NA	NA	NA	NA	NA	NA	NA
NA	NA	NA	NA	NA	NA	NA	NA

Date Reviewed: 12/16/02 **RS Supervision:** [redacted]

Print Name Signature

299

ROCKY FLATS ENVIRONMENTAL TECHNOLOGY SITE

INSTRUMENT DATA

Mfg.	Eberline	Mfg.	Ludlum	Mfg.	NE Electra
Model	SAC-4	Model	2929	Model	DP-6
Serial #	NA	Serial #	147727	Serial #	1429
Cal Due		Cal Due	1/12/03	Cal Due	5/11/03
Bkg	cpmα	Bkg	0.3 cpmα	Bkg	4 cpmα
Eff.	%	Eff.	33.5 %	Eff.	20.9 %
MDA	NA dpmα	MDA	18 dpmα	MDA	57 dpmα

Mfg.	Eberline	Mfg.	Ludlum	Mfg.	NE Electra
Model	SAC-4	Model	2929	Model	DP-6
Serial #	NA	Serial #	147727	Serial #	1429
Cal Due		Cal Due	1/12/03	Cal Due	5/11/03
Bkg	cpmα	Bkg	56 cpmβ	Bkg	456 cpmβ
Eff.	%	Eff.	42.9 %	Eff.	29 %
MDA	NA dpmα	MDA	205 dpmβ	MDA	352 dpmβ

Survey Type: Contamination
Building: Solar ponds
Location: east of former B pond
Purpose: Final disposal

RWP #: NA

Date: 12/12/02 Time: 1500

[redacted]

RCT: NA / NA / NA
Print name Signature Emp. #

PRN/REN # :

Comments: Survey performed per the direction of the Rad Eng.. Swipes counted the next day. Spot scans of the area around the direct survey points should no significant counts above background for alpha or beta contamination. Waste is be put into a roll off to go to the land fill.

SURVEY RESULTS

Swipe #	LOCATION	ALPHA Swipe dpm/100cm2	ALPHA Direct dpm/100cm2	ALPHA Wipe dpm/wipe	BETA Swipe dpm/100cm2	BETA Direct dpm/100cm2	BETA Wipe dpm/wipe
1	Misc concrete from portected area fence & ponds	0	33	NA	16	1555	NA
2	Misc concrete from portected area fence & ponds	0	14	NA	7	334	NA
3	Misc concrete from portected area fence & ponds	3	48	NA	0	748	NA
4	Misc concrete from portected area fence & ponds	0	33	NA	19	0	NA
5	Misc concrete from portected area fence & ponds	11	48	NA	5	0	NA
6	Misc concrete from portected area fence & ponds	0	48	NA	19	0	NA
7	Misc concrete from portected area fence & ponds	9	14	NA	2	214	NA
8	Misc concrete from portected area fence & ponds	9	0	NA	0	0	NA
9	Misc concrete from portected area fence & ponds	0	0	NA	0	955	NA
10	Misc wood	0	10	NA	14	786	NA
11	Misc wood	6	29	NA	14	1165	NA
12	Misc wood	0	33	NA	19	1562	NA
13	Misc wood	0	33	NA	0	0	NA
14	Misc wood	3	0	NA	0	969	NA
15	Pieces of culvert from north of 910 bldg.	0	10	NA	0	952	NA
16	Pieces of culvert from north of 910 bldg.	0	14	NA	2	0	NA
17	Pieces of culvert from north of 910 bldg.	0	29	NA	0	683	NA
18	Pieces of culvert from north of 910 bldg.	3	29	NA	14	724	NA
19	Pieces of culvert from north of 910 bldg.	0	0	NA	5	1321	NA
20	Pieces of culvert from north of 910 bldg.	0	0	NA	21	883	NA

Date Reviewed: 12-13-02 **RS Supervision:** James W Smith / James W Smith [redacted]
Print Name Signature

300

ROCKY FLATS ENVIRONMENTAL TECHNOLOGY SITE

SURVEY RESULTS

Swipe	LOCATION	ALPHA			BETA		
		Swipe	Direct	Wipe	Swipe	Direct	Wipe
#		dpm/100cm2	dpm/100cm2	dpm/wipe	dpm/100cm2	dpm/100cm2	dpm/wipe
21	man hole and casing uncovered near bldg.964	6	5	NA	0	310	NA
22	man hole and casing uncovered near bldg.965	0	14	NA	0	0	NA
23	man hole and casing uncovered near bldg.966	0	29	NA	0	0	NA
24	man hole and casing uncovered near bldg.967	3	5	NA	0	79	NA
25	man hole and casing uncovered near bldg.968	0	24	NA	0	0	NA
NA	NA	NA	NA	NA	NA	NA	NA
NA	NA	NA	NA	NA	NA	NA	NA

301

ROCKY FLATS ENVIRONMENTAL TECHNOLOGY SITE

INSTRUMENT DATA

Mfg.	Eberline	Mfg.	Eberline	Mfg.	NE Electra
Model	SAC-4	Model	BC-4	Model	DP-6
Serial #	959	Serial #	702	Serial #	1429
Cal Due	1/18/03	Cal Due	7/22/03	Cal Due	5/11/03
Bkg	0.1 cpmα	Bkg	31.3 cpmβ	Bkg	4 cpmα
Eff.	33 %	Eff.	25 %	Eff.	20.9 %
MDA	20 dpmα	MDA	200 dpmβ	MDA	57 dpmα
Mfg.	Eberline	Mfg.	Eberline	Mfg.	NE Electra
Model	SAC-4	Model	BC-4	Model	DP-6
Serial #	NA	Serial #	NA	Serial #	1429
Cal Due		Cal Due		Cal Due	5/11/03
Bkg	cpmα	Bkg	cpmβ	Bkg	456 cpmβ
Eff.	%	Eff.	%	Eff.	29 %
MDA	NA dpmα	MDA	NA dpmβ	MDA	352 dpmβ

Survey Type: Contamination
Building: 335
Location: 335
Purpose: Recycle concrete disposal

RWP #: NA

Date: 12/12/02 Time: 1500

R [redacted]

RCT: NA / NA / NA
Print name Signature Emp. #

PRN/REN # :
Comments: Surveyed at the request of the project Radiological Engineer. Spot scanned and performed pat survey on approximately 20% of the one half of the under side of bldg. 335 slab. Pats and swipes performed in the area of highest count during scan.

SURVEY RESULTS

Swipe #	LOCATION	ALPHA Swipe	ALPHA Direct	ALPHA Wipe	BETA Swipe	BETA Direct	BETA Wipe
		dpm/100cm2	dpm/100cm2	dpm/wipe	dpm/100cm2	dpm/100cm2	dpm/wipe
1	concrete	0	24	NA	0	1045	NA
2	concrete	0	10	NA	0	1169	NA
3	concrete	0	48	NA	16	476	NA
4	concrete	3	43	NA	0	400	NA
5	concrete	0	10	NA	0	834	NA
6	concrete	0	0	NA	0	1169	NA
7	concrete	0	29	NA	0	466	NA
8	concrete	3	0	NA	20	924	NA
9	concrete	3	5	NA	0	345	NA
10	concrete	0	19	NA	32	1107	NA
11	concrete	6	5	NA	0	1234	NA
12	concrete	0	14	NA	8	1866	NA
13	concrete	0	14	NA	8	600	NA
14	concrete	0	0	NA	0	421	NA
15	concrete	0	0	NA	0	0	NA
NA	NA	NA	NA	NA	NA	NA	NA
NA	NA	NA	NA	NA	NA	NA	NA
NA	NA	NA	NA	NA	NA	NA	NA
NA	NA	NA	NA	NA	NA	NA	NA
NA	NA	NA	NA	NA	NA	NA	NA

Date Reviewed: 12-16-02 **RS Supervision:** [redacted]
Print Name Signature

302

ROCKY FLATS ENVIRONMENTAL TECHNOLOGY SITE

INSTRUMENT DATA

Mfg.	Eberline	Mfg.	Eberline	Mfg.	NE Electra
Model	SAC-4	Model	BC-4	Model	DP-6
Serial #	959	Serial #	702	Serial #	1665
Cal Due	1/18/03	Cal Due	7/22/03	Cal Due	3/3/03
Bkg	0.1 cpmα	Bkg	36.5 cpmβ	Bkg	7 cpmα
Eff.	33 %	Eff.	25 %	Eff.	21.8 %
MDA	20 dpmα	MDA	200 dpmβ	MDA	69 dpmα
Mfg.	Eberline	Mfg.	Eberline	Mfg.	NE Electra
Model	SAC-4	Model	BC-4	Model	DP-6
Serial #	NA	Serial #	NA	Serial #	1665
Cal Due		Cal Due		Cal Due	3/3/03
Bkg	cpmα	Bkg	cpmβ	Bkg	597 cpmβ
Eff.	%	Eff.	%	Eff.	30.9 %
MDA	NA dpmα	MDA	NA dpmβ	MDA	376 dpmβ

Survey Type: Contamination
Building: 335
Location: 335
Purpose: Recycle concrete disposal

RWP #: NA

Date: 12/11/02 Time: 0900

[redacted]

RCT: NA / NA / NA
Print name Signature Emp. #

PRN/REN # :

Comments: Surveyed at the request of the project Radiological Engineer. Spot scanned and performed pat survey on approximately 20% of the one half of the under side of bldg. 335 slab. Pats and swipes performed in the area of highest count during scan.

SURVEY RESULTS

Swipe #	LOCATION	ALPHA Swipe	ALPHA Direct	ALPHA Wipe	BETA Swipe	BETA Direct	BETA Wipe
		dpm/100cm2	dpm/100cm2	dpm/wipe	dpm/100cm2	dpm/100cm2	dpm/wipe
1	concrete	3	0	NA	0	469	NA
2	concrete	0	0	NA	0	518	NA
3	concrete	0	9	NA	16	718	NA
4	concrete	3	0	NA	0	663	NA
5	concrete	0	0	NA	0	388	NA
6	concrete	0	0	NA	0	790	NA
7	concrete	0	0	NA	0	751	NA
8	concrete	0	0	NA	20	722	NA
9	concrete	6	5	NA	0	638	NA
10	concrete	0	0	NA	32	650	NA
NA	NA	NA	NA	NA	NA	NA	NA
NA	NA	NA	NA	NA	NA	NA	NA
NA	NA	NA	NA	NA	NA	NA	NA
NA	NA	NA	NA	NA	NA	NA	NA
NA	NA	NA	NA	NA	NA	NA	NA
NA	NA	NA	NA	NA	NA	NA	NA
NA	NA	NA	NA	NA	NA	NA	NA
NA	NA	NA	NA	NA	NA	NA	NA
NA	NA	NA	NA	NA	NA	NA	NA
NA	NA	NA	NA	NA	NA	NA	NA

Date Reviewed: 12-16-02 **RS Supervision:** Steven / [signature] [redacted]
Print Name Signature

303

ROCKY FLATS ENVIRONMENTAL TECHNOLOGY SITE

INSTRUMENT DATA

Mfg.	Eberline	Mfg.	Eberline	Mfg.	NE Electra
Model	SAC-4	Model	BC-4	Model	DP-6
Serial #	959	Serial #	70	Serial #	3110
Cal Due	1/18/03	Cal Due	12/13/02	Cal Due	6/4/03
Bkg	0 cpmα	Bkg	33.2 cpmβ	Bkg	1 cpmα
Eff.	33 %	Eff.	25 %	Eff.	21.2 %
MDA	20 dpmα	MDA	200 dpmβ	MDA	35 dpmα

Mfg.	Eberline	Mfg.	Eberline	Mfg.	NE Electra
Model	SAC-4	Model	BC-4	Model	DP-6
Serial #	NA	Serial #	NA	Serial #	3110
Cal Due		Cal Due		Cal Due	6/4/03
Bkg	cpmα	Bkg	cpmβ	Bkg	440 cpmβ
Eff.	%	Eff.	%	Eff.	29.9 %
MDA	NA dpmα	MDA	NA dpmβ	MDA	335 dpmβ

Survey Type: Contamination
Building: 335
Location: 335
Purpose: incomming base line

RWP #: NA

Date: 12/10/02 Time: 0900

[redacted]
Print name Signature Emp. #

PRN/REN # : NA

Comments: Survey picture is not of the actual back hoe surveys but is a simmular model. The SMM # is 006252. Scanned accessible area of back hoe. No detectable counts found above background for alpha or beta contamination.

SURVEY RESULTS

Swipe #	LOCATION	ALPHA Swipe dpm/100cm2	ALPHA Direct dpm/100cm2	ALPHA Wipe dpm/wipe	BETA Swipe dpm/100cm2	BETA Direct dpm/100cm2	BETA Wipe dpm/wipe
1	bucket	< 20	< 35	NA	< 200	< 335	NA
2	bucket	< 20	< 35	NA	< 200	< 335	NA
3	hammer	< 20	< 35	NA	< 200	< 335	NA
4	hammer	< 20	< 35	NA	< 200	< 335	NA
5	side op bucket	< 20	< 35	NA	< 200	< 335	NA
6	tire	< 20	< 35	NA	< 200	< 335	NA
7	tire	< 20	< 35	NA	< 200	< 335	NA
8	air intake	< 20	< 35	NA	< 200	< 335	NA
9	radiator intake	< 20	< 35	NA	< 200	< 335	NA
10	controls	< 20	< 35	NA	< 200	< 335	NA
11	controls	< 20	< 35	NA	< 200	< 335	NA
12	controls	< 20	< 35	NA	< 200	< 335	NA
13	controls	< 20	< 35	NA	< 200	< 335	NA
14	controls	< 20	< 35	NA	< 200	< 335	NA
15	controls	< 20	< 35	NA	< 200	< 335	NA
16	floor	< 20	< 35	NA	< 200	< 335	NA
17	tire	< 20	< 35	NA	< 200	< 335	NA
18	tire	< 20	< 35	NA	< 200	< 335	NA
19	hoe arm	< 20	< 35	NA	< 200	< 335	NA
20	bucket	< 20	< 35	NA	< 200	< 335	NA

Date Reviewed: 12/11/02 **RS Supervision:** [redacted]
Print Name Signature

304

ROCKY FLATS ENVIRONMENTAL TECHNOLOGY SITE

Drawing Showing Survey Points

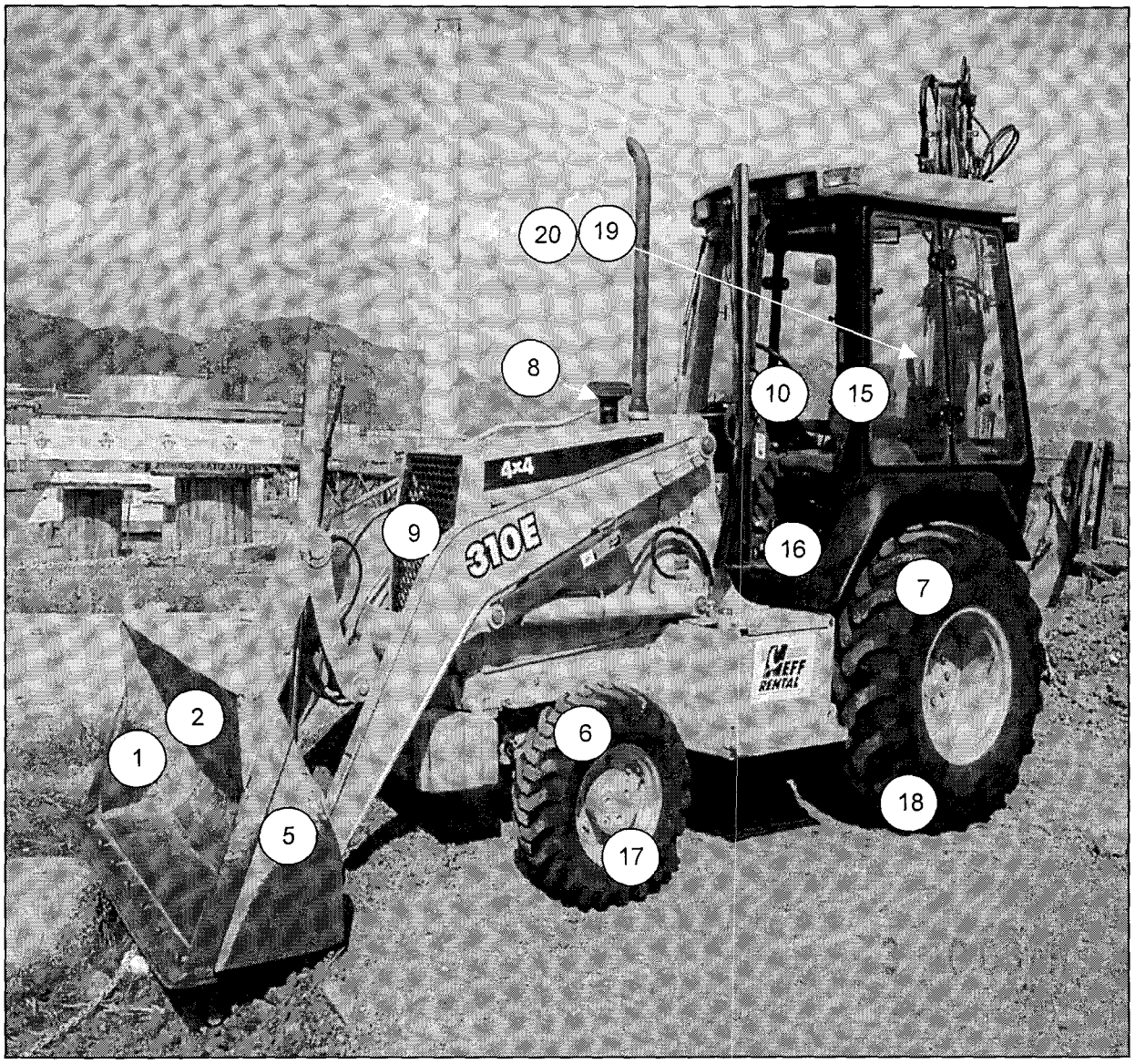

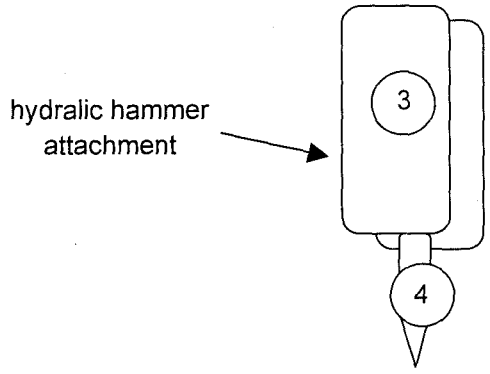

305

ROCKY FLATS ENVIRONMENTAL TECHNOLOGY SITE

INSTRUMENT DATA

Mfg.	Eberline	Mfg.	Eberline	Mfg.	NE Electra
Model	SAC-4	Model	BC-4	Model	DP-6
Serial #	959	Serial #	70	Serial #	3110
Cal Due	1/18/03	Cal Due	12/13/02	Cal Due	6/4/03
Bkg	0 cpmα	Bkg	33.2 cpmβ	Bkg	1 cpmα
Eff.	33 %	Eff.	25 %	Eff.	21.2 %
MDA	20 dpmα	MDA	200 dpmβ	MDA	35 dpmα

Mfg.	Eberline	Mfg.	Eberline	Mfg.	NE Electra
Model	SAC-4	Model	BC-4	Model	DP-6
Serial #	NA	Serial #	NA	Serial #	3110
Cal Due		Cal Due		Cal Due	6/4/03
Bkg	cpmα	Bkg	cpmβ	Bkg	440 cpmβ
Eff.	%	Eff.	%	Eff.	29.9 %
MDA	NA dpmα	MDA	NA dpmβ	MDA	335 dpmβ

Survey Type: Contamination
Building: Solar Ponds
Location: Solar Ponds
Purpose: Final survey before going to 335

RWP #: NA

Date: 12/10/02 Time: 1040

[redacted]

PRN/REN # : NA
Comments: The back hoe number is SMM # is 065471 . Scanned accessible area of back hoe. No detectable counts found above background for alpha or beta contamination.

SURVEY RESULTS

Swipe	LOCATION	ALPHA Swipe	ALPHA Direct	ALPHA Wipe	BETA Swipe	BETA Direct	BETA Wipe
#	see map	dpm/100cm2	dpm/100cm2	dpm/wipe	dpm/100cm2	dpm/100cm2	dpm/wipe
1	bucket	< 20	< 35	NA	< 200	< 335	NA
2	bucket	< 20	< 35	NA	< 200	< 335	NA
3	pads	< 20	< 35	NA	< 200	< 335	NA
4	pads	< 20	< 35	NA	< 200	< 335	NA
5	side op bucket	< 20	< 35	NA	< 200	< 335	NA
6	tire	< 20	< 35	NA	< 200	< 335	NA
7	tire	< 20	< 35	NA	< 200	< 335	NA
8	air intake	< 20	< 35	NA	< 200	< 335	NA
9	radiator intake	< 20	< 35	NA	< 200	< 335	NA
10	controls	< 20	< 35	NA	< 200	< 335	NA
11	controls	< 20	< 35	NA	< 200	< 335	NA
12	controls	< 20	< 35	NA	< 200	< 335	NA
13	controls	< 20	< 35	NA	< 200	< 335	NA
14	controls	< 20	< 35	NA	< 200	< 335	NA
15	controls	< 20	< 35	NA	< 200	< 335	NA
16	floor	< 20	< 35	NA	< 200	< 335	NA
17	tire	< 20	< 35	NA	< 200	< 335	NA
18	tire	< 20	< 35	NA	< 200	< 335	NA
19	hoe arm	< 20	< 35	NA	< 200	< 335	NA
20	bucket	< 20	< 35	NA	< 200	< 335	NA

Date Reviewed: 12-11-02 **RS Supervision:** S Gaskins / [redacted]
Print Name Signature

306

ROCKY FLATS ENVIRONMENTAL TECHNOLOGY SITE

Drawing Showing Survey Points

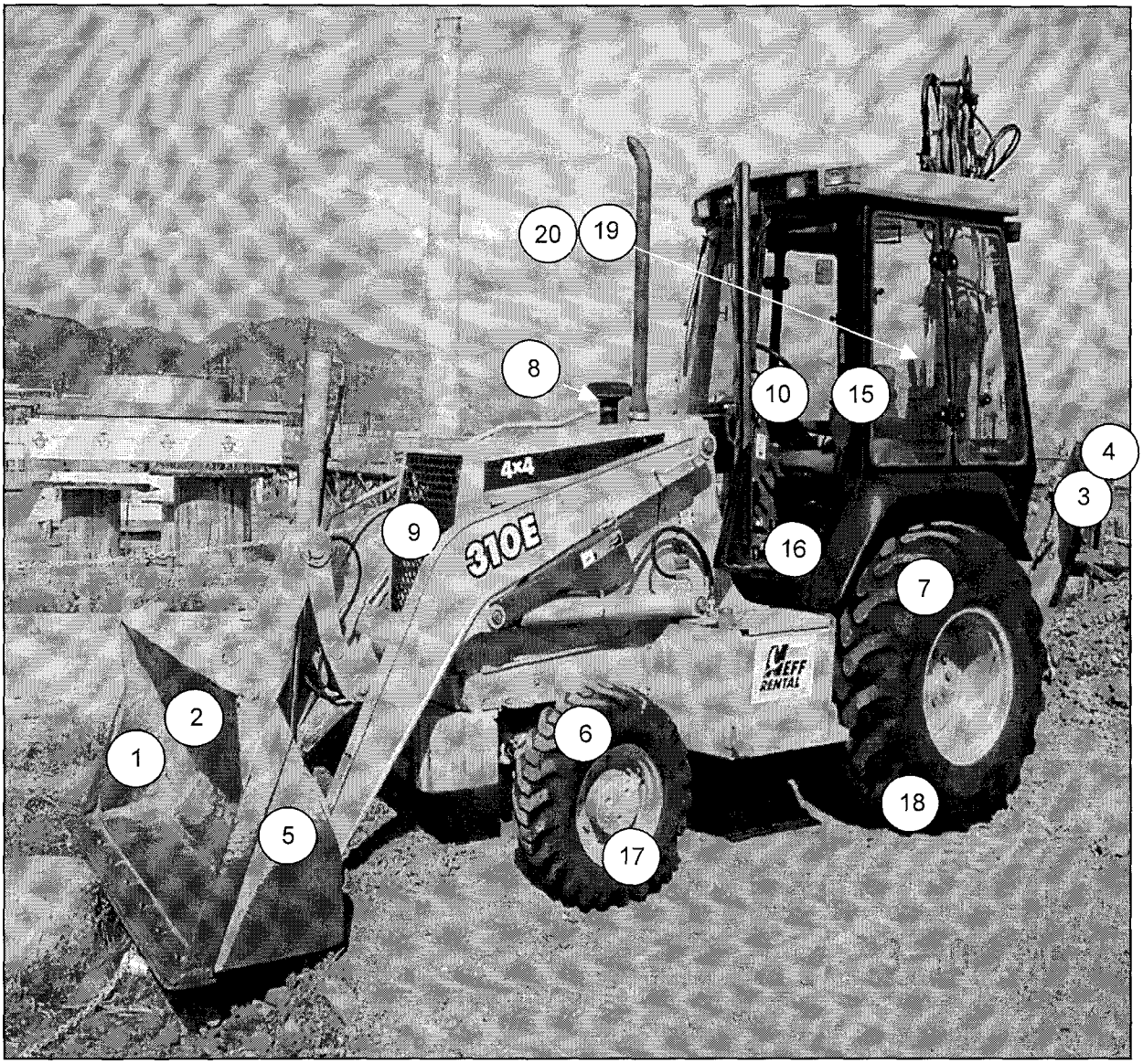

307

ROCKY FLATS ENVIRONMENTAL TECHNOLOGY SITE

INSTRUMENT DATA

Mfg.	Eberline	Mfg.	Eberline	Mfg.	NE Electra
Model	SAC-4	Model	BC-4	Model	DP-6
Serial #	959	Serial #	70	Serial #	3110
Cal Due	1/18/03	Cal Due	12/13/02	Cal Due	6/4/03
Bkg	0 cpmα	Bkg	33.2 cpmβ	Bkg	1 cpmα
Eff.	33 %	Eff.	25 %	Eff.	21.2 %
MDA	20 dpmα	MDA	200 dpmβ	MDA	35 dpmα

Mfg.	Eberline	Mfg.	Eberline	Mfg.	NE Electra
Model	SAC-4	Model	BC-4	Model	DP-6
Serial #	NA	Serial #	NA	Serial #	3110
Cal Due		Cal Due		Cal Due	6/4/03
Bkg	cpmα	Bkg	cpmβ	Bkg	440 cpmβ
Eff.	%	Eff.	%	Eff.	29.9 %
MDA	NA dpmα	MDA	NA dpmβ	MDA	335 dpmβ

Survey Type: Contamination
Building: Solar Ponds
Location: Solar Ponds
Purpose: Final survey before going to 335

RWP #: NA

Date: 12/10/02 Time: 1230

[redacted]

PRN/REN # :

Comments: Truck used at the solar ponds to hall water from the frac tanks to the sewer treatment plant. The Colorado registration number is 340-BHI . Scanned accessible area of truck. No detectable counts found above background for alpha or beta contamination.

SURVEY RESULTS

Swipe #	LOCATION	ALPHA Swipe dpm/100cm2	ALPHA Direct dpm/100cm2	ALPHA Wipe dpm/wipe	BETA Swipe dpm/100cm2	BETA Direct dpm/100cm2	BETA Wipe dpm/wipe
1	tires	< 20	< 35	NA	< 200	< 335	NA
2	step	< 20	< 35	NA	< 200	< 335	NA
3	tires	< 20	< 35	NA	< 200	< 335	NA
4	tires	< 20	< 35	NA	< 200	< 335	NA
5	opposite side tire	< 20	< 35	NA	< 200	< 335	NA
6	opposite side tire	< 20	< 35	NA	< 200	< 335	NA
7	opposite side tire	< 20	< 35	NA	< 200	< 335	NA
8	controls	< 20	< 35	NA	< 200	< 335	NA
9	controls	< 20	< 35	NA	< 200	< 335	NA
10	controls	< 20	< 35	NA	< 200	< 335	NA
11	controls	< 20	< 35	NA	< 200	< 335	NA
12	controls	< 20	< 35	NA	< 200	< 335	NA
13	floor	< 20	< 35	NA	< 200	< 335	NA
14	fender	< 20	< 35	NA	< 200	< 335	NA
15	opposite side fender	< 20	< 35	NA	< 200	< 335	NA
16	valves / piping	< 20	< 35	NA	< 200	< 335	NA
17	valves / piping	< 20	< 35	NA	< 200	< 335	NA
18	valves / piping	< 20	< 35	NA	< 200	< 335	NA
19	valves / piping	< 20	< 35	NA	< 200	< 335	NA
20	valves / piping	< 20	< 35	NA	< 200	< 335	NA

Date Reviewed: 12-11-02 **RS Supervision:** S Goodman / [redacted]

Print Name Signature

308

Drawing Showing Survey Points

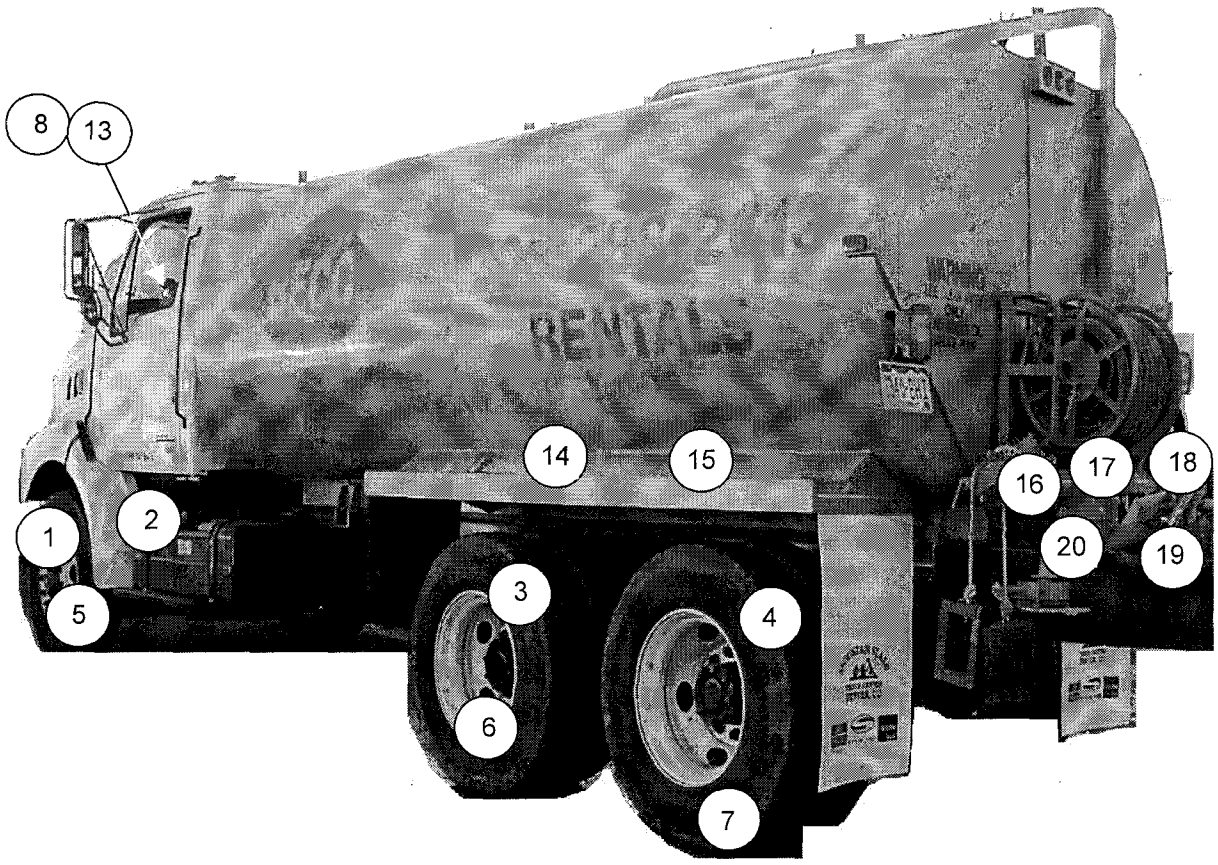

309

ROCKY FLATS ENVIRONMENTAL TECHNOLOGY SITE

INSTRUMENT DATA

Mfg.	Eberline	Mfg.	Eberline	Mfg.	NE Electra
Model	SAC-4	Model	BC-4	Model	DP-6
Serial #	959	Serial #	70	Serial #	3110
Cal Due	1/18/03	Cal Due	12/13/02	Cal Due	6/4/03
Bkg	0 cpmα	Bkg	33.2 cpmβ	Bkg	1 cpmα
Eff.	33 %	Eff.	25 %	Eff.	21.2 %
MDA	20 dpmα	MDA	200 dpmβ	MDA	35 dpmα
Mfg.	Eberline	Mfg.	Eberline	Mfg.	NE Electra
Model	SAC-4	Model	BC-4	Model	DP-6
Serial #	NA	Serial #	NA	Serial #	3110
Cal Due		Cal Due		Cal Due	6/4/03
Bkg	cpmα	Bkg	cpmβ	Bkg	440 cpmβ
Eff.	%	Eff.	%	Eff.	29.9 %
MDA	NA dpmα	MDA	NA dpmβ	MDA	335 dpmβ

Survey Type: Contamination
Building: Solar Ponds
Location: Solar Ponds
Purpose: Material to be sent to land fill

RWP #: NA

Date: 12/10/02 Time: 1230

[redacted]

PRN/REN # :

Comments: Survey perform per rad engineer for misc. concrete and debre from former protected area fence to be sent to public land fill. Spot scanned accessible areas of debre and concrete no detectable counts found for alpha of beta contamination.

SURVEY RESULTS

Swipe #	LOCATION	ALPHA Swipe dpm/100cm2	ALPHA Direct dpm/100cm2	ALPHA Wipe dpm/wipe	BETA Swipe dpm/100cm2	BETA Direct dpm/100cm2	BETA Wipe dpm/wipe
1	Misc concrete from portected area fence	< 20	< 35	NA	< 200	< 335	NA
2	Misc concrete from portected area fence	< 20	< 35	NA	< 200	< 335	NA
3	Misc concrete from portected area fence	< 20	< 35	NA	< 200	< 335	NA
4	Misc concrete from portected area fence	< 20	< 35	NA	< 200	< 335	NA
5	Misc concrete from portected area fence	< 20	< 35	NA	< 200	< 335	NA
6	Misc concrete from portected area fence	< 20	< 35	NA	< 200	< 335	NA
7	Misc concrete from portected area fence	< 20	< 35	NA	< 200	< 335	NA
8	Misc concrete from portected area fence	< 20	< 35	NA	< 200	< 335	NA
9	Misc concrete from portected area fence	< 20	< 35	NA	< 200	< 335	NA
10	Misc concrete from portected area fence	< 20	< 35	NA	< 200	< 335	NA
11	Misc concrete from portected area fence	< 20	< 35	NA	< 200	< 335	NA
12	Misc concrete from portected area fence	< 20	< 35	NA	< 200	< 335	NA
13	Misc concrete from portected area fence	< 20	< 35	NA	< 200	< 335	NA
14	Misc concrete from portected area fence	< 20	< 35	NA	< 200	< 335	NA
15	Misc concrete from portected area fence	< 20	< 35	NA	< 200	< 335	NA
16	Misc concrete from portected area fence	< 20	< 35	NA	< 200	< 335	NA
17	Misc concrete from portected area fence	< 20	< 35	NA	< 200	< 335	NA
18	Misc concrete from portected area fence	< 20	< 35	NA	< 200	< 335	NA
19	Misc concrete from portected area fence	< 20	< 35	NA	< 200	< 335	NA
20	Misc concrete from portected area fence	< 20	< 35	NA	< 200	< 335	NA

Date Reviewed: 12-10-02 **RS Supervision:** James W. Smith / James W. Smith [redacted]
Print Name Signature

310

RADIOACTIVE MATERIAL (RAM) PACKAGE SURVEY FORM

Location:	East of B solar ponds	Date:	12/6/02	Time:	1515
RWP # 02- RISS- 026					

Survey Instrument Data:

Mfg:	Bicron	Eberline	Eberline	NA	NA
Model:	Microrem	SAC-4	BC-4	NA	NA
Serial #:	B982H	883	911	NA	NA
Cal Due Date:	2/12/03	2/28/03	10/30/03	NA	NA
Background:	< 0.01mrem/hr.	0.2	34.7	NA	NA
Efficiency:	NA	33%	25%	NA	NA
MDA	0.017 mrem/hr	20 dpm	200 dpm	NA	NA

Reason for Survey: Pre shipping to envirocare

Contamination (dpm/300 cm2)					**Radiation (mrem/hr)**						
Swipe #	Removable		Total		Package Exterior Contact and @ 1m						
	Alpha	Beta/Gamma	Alpha	Beta/Gamma		β/γ		Neutron		Total	
						Cont.	@1m	Cont.	@1m	Cont.	@1m
1	< 20	< 200	NA	NA	1	< 0.017	< 0.017	0	0	< 0.017	< 0.017
2	< 20	< 200	NA	NA	2	< 0.017	< 0.017	0	0	< 0.017	< 0.017
3	< 20	< 200	NA	NA	3	< 0.017	< 0.017	0	0	< 0.017	< 0.017
4	< 20	< 200	NA	NA	4	< 0.017	< 0.017	0	0	< 0.017	< 0.017
5	< 20	< 200	NA	NA	5	< 0.017	< 0.017	0	0	< 0.017	< 0.017
6	< 20	< 200	NA	NA	6	< 0.017	< 0.017	0	0	< 0.017	< 0.017
7	< 20	< 200	NA	NA	7	< 0.017	< 0.017	NA	NA	< 0.017	< 0.017
8	< 20	< 200	NA	NA	8	< 0.017	< 0.017	NA	NA	< 0.017	< 0.017
NA	NA	NA	NA	NA	NA	NA	NA	NA	NA	NA	NA
NA	NA	NA	NA	NA	NA	NA	NA	NA	NA	NA	NA
NA	NA	NA	NA	NA	NA	NA	NA	NA	NA	NA	NA
NA	NA	NA	NA	NA	NA	NA	NA	NA	NA	NA	NA

***Drawing Showing Survey Points**

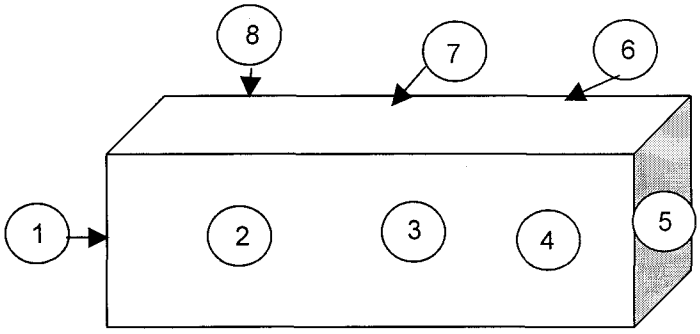

This survey is of the Intermodals that are ready to be shippedfrom the solar ponds. The WEMS numbers is L00892.

NOTE: Radiation readings are the highest for each distinct plane.

Performed by:	M. Simmers	M. Simmers	[redacted]	/ 12/6/02
Name (Print)		Signature		Date
Approved by: RS Supervision:	Signature	/		/ 12-6-02
Name (Print)		Signature		Date

RADIOACTIVE MATERIAL (RAM) PACKAGE SURVEY FORM

Location:	East of B solar ponds	Date:	12/6/02	Time:	1515

RWP # 02- RISS- 026

Survey Instrument Data:

Mfg:	Bicron	Eberline	Eberline	NA	NA
Model:	Microrem	SAC-4	BC-4	NA	NA
Serial #:	B982H	883	911	NA	NA
Cal Due Date:	2/12/03	2/28/03	10/30/03	NA	NA
Background:	< 0.01mrem/hr.	0.2	34.7	NA	NA
Efficiency:	NA	33%	25%	NA	NA
MDA	0.017 mrem/hr	20 dpm	200 dpm	NA	NA

Reason for Survey: Pre shipping to envirocare

Contamination (dpm/300 cm2)					Radiation (mrem/hr)						
Swipe #	Removable		Total		Package Exterior Contact and @ 1m						
	Alpha	Beta/Gamma	Alpha	Beta/Gamma		β/γ		Neutron		Total	
						Cont.	@1m	Cont.	@1m	Cont.	@1m
1	< 20	< 200	NA	NA	1	< 0.017	< 0.017	0	0	< 0.017	< 0.017
2	< 20	< 200	NA	NA	2	< 0.017	< 0.017	0	0	< 0.017	< 0.017
3	< 20	< 200	NA	NA	3	< 0.017	< 0.017	0	0	< 0.017	< 0.017
4	< 20	< 200	NA	NA	4	< 0.017	< 0.017	0	0	< 0.017	< 0.017
5	< 20	< 200	NA	NA	5	< 0.017	< 0.017	0	0	< 0.017	< 0.017
6	< 20	< 200	NA	NA	6	< 0.017	< 0.017	0	0	< 0.017	< 0.017
7	< 20	< 200	NA	NA	7	< 0.017	< 0.017	NA	NA	< 0.017	< 0.017
8	< 20	< 200	NA	NA	8	< 0.017	< 0.017	NA	NA	< 0.017	< 0.017
NA	NA	NA	NA	NA	NA	NA	NA	NA	NA	NA	NA
NA	NA	NA	NA	NA	NA	NA	NA	NA	NA	NA	NA
NA	NA	NA	NA	NA	NA	NA	NA	NA	NA	NA	NA
NA	NA	NA	NA	NA	NA	NA	NA	NA	NA	NA	NA

***Drawing Showing Survey Points**

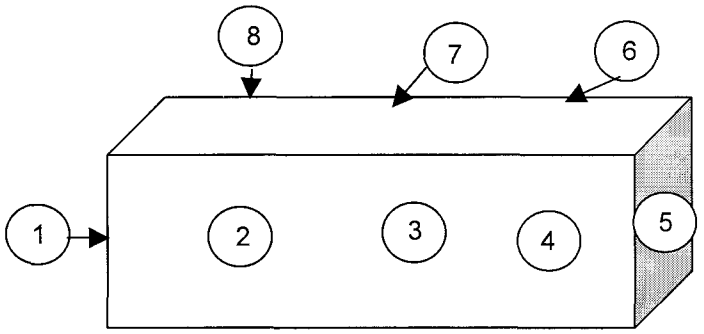

This survey is of the Intermodals that are ready to be shippedfrom the solar ponds. The WEMS numbers is L00893.

NOTE: Radiation readings are the highest for each distinct plane.

Performed by:	M. Simmers	/ M. Simmers /	[redacted]	/ 12/6/02
	Name (Print)	Signature		Date
Approved by: RS Supervision:	S Simmers	/	[redacted]	/ 12-6-02
	Name (Print)	Signature		Date

RADIOACTIVE MATERIAL (RAM) PACKAGE SURVEY FORM

Location:	East of B solar ponds	Date:	12/6/02	Time:	1515

RWP # 02- RISS- 026

Survey Instrument Data:

Mfg:	Bicron	Eberline	Eberline	NA	NA
Model:	Microrem	SAC-4	BC-4	NA	NA
Serial #:	B982H	883	911	NA	NA
Cal Due Date:	2/12/03	2/28/03	10/30/03	NA	NA
Background:	< 0.01mrem/hr.	0.2	34.7	NA	NA
Efficiency:	NA	33%	25%	NA	NA
MDA	0.017 mrem/hr	20 dpm	200 dpm	NA	NA

Reason for Survey: Pre shipping to envirocare

Contamination (dpm/300 cm2)					**Radiation (mrem/hr)**						
Swipe #	Removable		Total		Package Exterior Contact and @ 1m						
	Alpha	Beta/Gamma	Alpha	Beta/Gamma		β/γ		Neutron		Total	
						Cont.	@1m	Cont.	@1m	Cont.	@1m
1	< 20	< 200	NA	NA	1	< 0.017	< 0.017	0	0	< 0.017	< 0.017
2	< 20	< 200	NA	NA	2	< 0.017	< 0.017	0	0	< 0.017	< 0.017
3	< 20	< 200	NA	NA	3	< 0.017	< 0.017	0	0	< 0.017	< 0.017
4	< 20	< 200	NA	NA	4	< 0.017	< 0.017	0	0	< 0.017	< 0.017
5	< 20	< 200	NA	NA	5	< 0.017	< 0.017	0	0	< 0.017	< 0.017
6	< 20	< 200	NA	NA	6	< 0.017	< 0.017	0	0	< 0.017	< 0.017
7	< 20	< 200	NA	NA	7	< 0.017	< 0.017	NA	NA	< 0.017	< 0.017
8	< 20	< 200	NA	NA	8	< 0.017	< 0.017	NA	NA	< 0.017	< 0.017
NA	NA	NA	NA	NA	NA	NA	NA	NA	NA	NA	NA
NA	NA	NA	NA	NA	NA	NA	NA	NA	NA	NA	NA
NA	NA	NA	NA	NA	NA	NA	NA	NA	NA	NA	NA
NA	NA	NA	NA	NA	NA	NA	NA	NA	NA	NA	NA

***Drawing Showing Survey Points**

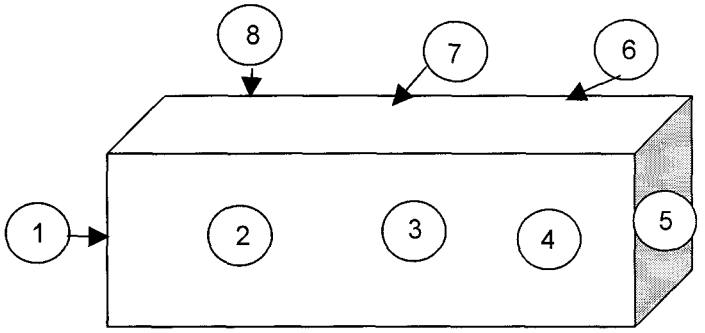

This survey is of the Intermodals that are ready to be shippedfrom the solar ponds. The WEMS numbers is L00894.

NOTE: Radiation readings are the highest for each distinct plane.

Performed by:	M. Simmers	M. Simmers	[redacted]	12/6/02
Name (Print)		Signature		Date
Approved by: RS Supervision:			[redacted]	12-6-02
Name (Print)		Signature		Date

RADIOACTIVE MATERIAL (RAM) PACKAGE SURVEY FORM

Location:	East of B solar ponds	Date:	12/6/02	Time:	1515

RWP # 02- RISS- 026

Survey Instrument Data:

Mfg:	Bicron	Eberline	Eberline	NA	NA
Model:	Microrem	SAC-4	BC-4	NA	NA
Serial #:	B982H	883	911	NA	NA
Cal Due Date:	2/12/03	2/28/03	10/30/03	NA	NA
Background:	< 0.01mrem/hr.	0.2	34.7	NA	NA
Efficiency:	NA	33%	25%	NA	NA
MDA	0.017 mrem/hr	20 dpm	200 dpm	NA	NA

Reason for Survey: Pre shipping to envirocare

Contamination (dpm/300 cm2)					**Radiation (mrem/hr)**						
Swipe #	Removable		Total		Package Exterior Contact and @ 1m						
	Alpha	Beta/Gamma	Alpha	Beta/Gamma		β/γ		Neutron		Total	
						Cont.	@1m	Cont.	@1m	Cont.	@1m
1	< 20	< 200	NA	NA	1	< 0.017	< 0.017	0	0	< 0.017	< 0.017
2	< 20	< 200	NA	NA	2	< 0.017	< 0.017	0	0	< 0.017	< 0.017
3	< 20	< 200	NA	NA	3	< 0.017	< 0.017	0	0	< 0.017	< 0.017
4	< 20	< 200	NA	NA	4	< 0.017	< 0.017	0	0	< 0.017	< 0.017
5	< 20	< 200	NA	NA	5	< 0.017	< 0.017	0	0	< 0.017	< 0.017
6	< 20	< 200	NA	NA	6	< 0.017	< 0.017	0	0	< 0.017	< 0.017
7	< 20	< 200	NA	NA	7	< 0.017	< 0.017	NA	NA	< 0.017	< 0.017
8	< 20	< 200	NA	NA	8	< 0.017	< 0.017	NA	NA	< 0.017	< 0.017
NA	NA	NA	NA	NA	NA	NA	NA	NA	NA	NA	NA
NA	NA	NA	NA	NA	NA	NA	NA	NA	NA	NA	NA
NA	NA	NA	NA	NA	NA	NA	NA	NA	NA	NA	NA
NA	NA	NA	NA	NA	NA	NA	NA	NA	NA	NA	NA

***Drawing Showing Survey Points**

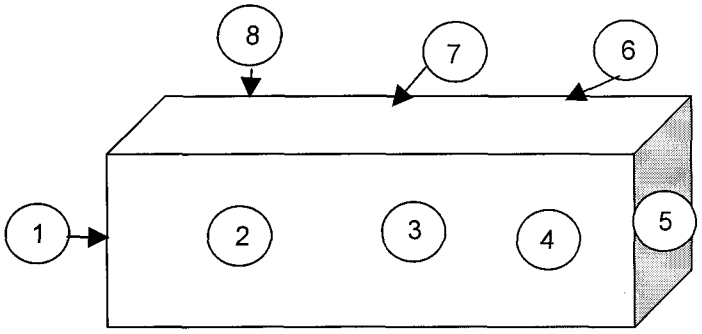

This survey is of the Intermodals that are ready to be shippedfrom the solar ponds. The WEMS numbers is L00895.

NOTE: Radiation readings are the highest for each distinct plane.

Performed by:	M. Simmers	M. Simmers	[redacted]	12/6/02
Name (Print)		Signature		Date
Approved by: RS Supervision:	S Cashman		[redacted]	12-6-02
Name (Print)		Signature		Date

ROCKY FLATS ENVIRONMENTAL TECHNOLOGY SITE

INSTRUMENT DATA

Mfg.	Ludlum	Mfg.	Ludlum	Mfg.	NE Electra
Model	2929	Model	2929	Model	DP-6
Serial #	147727	Serial #	105885	Serial #	1589
Cal Due	1/12/03	Cal Due	3/26/03	Cal Due	4/30/03
Bkg	0.3 cpmα	Bkg	0.3 cpmα	Bkg	1 cpmα
Eff.	38.5 %	Eff.	36.9 %	Eff.	21.5 %
MDA	18 dpmα	MDA	18 dpmα	MDA	34 dpmα

Mfg.	Ludlum	Mfg.	Ludlum	Mfg.	NE Electra
Model	2929	Model	2929	Model	DP-6
Serial #	147727	Serial #	105885	Serial #	1589
Cal Due	1/12/03	Cal Due	3/26/03	Cal Due	4/30/03
Bkg	60.9 cpmβ	Bkg	60.8 cpmβ	Bkg	445 cpmβ
Eff.	42.9 %	Eff.	38.3 %	Eff.	31.5 %
MDA	205 dpmβ	MDA	205 dpmβ	MDA	320 dpmβ

Survey Type: Contamination

Building: Solar ponds

Location: Old protected area fence east of S.P.s

Purpose: Disposal of old fence post concrete

RWP #: NA

Date: 12/6/02 Time: 1415

[redacted]

RCT: NA / NA / NA

Print name Signature Emp. #

PRN/REN # :

Comments:

SURVEY RESULTS

Swipe #	LOCATION	ALPHA Swipe dpm/100cm2	ALPHA Direct dpm/100cm2	ALPHA Wipe dpm/wipe	BETA Swipe dpm/100cm2	BETA Direct dpm/100cm2	BETA Wipe dpm/wipe
1	Misc concrete from portected area fence	< 18	47	NA	< 205	581	NA
2	Misc concrete from portected area fence	< 18	42	NA	< 205	467	NA
3	Misc concrete from portected area fence	< 18	19	NA	< 205	1425	NA
4	Misc concrete from portected area fence	< 18	0	NA	< 205	1921	NA
5	Misc concrete from portected area fence	< 18	47	NA	< 205	1603	NA
6	Misc concrete from portected area fence	< 18	9	NA	< 205	1838	NA
7	Misc concrete from portected area fence	< 18	37	NA	< 205	2044	NA
8	Misc concrete from portected area fence	< 18	9	NA	< 205	1340	NA
9	Misc concrete from portected area fence	< 18	0	NA	< 205	1333	NA
10	Misc concrete from portected area fence	< 18	56	NA	< 205	1575	NA
11	Misc concrete from portected area fence	< 18	70	NA	< 205	1549	NA
12	Misc concrete from portected area fence	< 18	56	NA	< 205	1603	NA
13	Misc concrete from portected area fence	< 18	107	NA	< 205	1610	NA
14	Misc concrete from portected area fence	< 18	19	NA	< 205	1511	NA
15	Misc concrete from portected area fence	< 18	88	NA	< 205	2927	NA
16	Misc concrete from portected area fence	< 18	93	NA	< 205	2742	NA
17	Misc concrete from portected area fence	< 18	107	NA	< 205	2765	NA
18	Misc concrete from portected area fence	< 18	93	NA	< 205	1244	NA
19	Misc concrete from portected area fence	< 18	79	NA	< 205	971	NA
20	Misc concrete from portected area fence	< 18	51	NA	< 205	781	NA

Date Reviewed: 12-9-02 **RS Supervision:** S Greenwood / [redacted]

Print Name Signature

ROCKY FLATS ENVIRONMENTAL TECHNOLOGY SITE

SURVEY RESULTS

Swipe #	LOCATION	ALPHA Swipe dpm/100cm2	ALPHA Direct dpm/100cm2	ALPHA Wipe dpm/wipe	BETA Swipe dpm/100cm2	BETA Direct dpm/100cm2	BETA Wipe dpm/wipe
21	Misc concrete from portected area fence	< 18	47	NA	< 205	1086	NA
22	Misc concrete from portected area fence	< 18	56	NA	< 205	724	NA
23	Misc concrete from portected area fence	< 18	8	NA	< 205	1921	NA
24	Misc concrete from portected area fence	< 18	37	NA	< 205	1623	NA
25	Misc concrete from portected area fence	< 18	93	NA	< 205	1511	NA
26	Misc concrete from portected area fence	< 18	0	NA	< 205	1925	NA
27	Misc concrete from portected area fence	< 18	42	NA	< 205	1345	NA
28	Misc concrete from portected area fence	< 18	37	NA	< 205	1328	NA
29	Misc concrete from portected area fence	< 18	9	NA	< 205	1578	NA
30	Misc concrete from portected area fence	< 18	9	NA	< 205	1501	NA
NA	NA	NA	NA	NA	NA	NA	NA
NA	NA	NA	NA	NA	NA	NA	NA

ROCKY FLATS ENVIRONMENTAL TECHNOLOGY SITE

INSTRUMENT DATA

Mfg.	Eberline	Mfg.	Eberline	Mfg.	NE Electra
Model	SAC-4	Model	BC-4	Model	DP-6
Serial #	959	Serial #	700	Serial #	3113
Cal Due	1/18/02	Cal Due	12/13/02	Cal Due	3/24/03
Bkg	0.5 cpmα	Bkg	32.4 cpmβ	Bkg	2 cpmα
Eff.	33 %	Eff.	25 %	Eff.	21.9 %
MDA	20 dpmα	MDA	200 dpmβ	MDA	42 dpmα

Mfg.	Eberline	Mfg.	Eberline	Mfg.	NE Electra
Model	SAC-4	Model	BC-4	Model	DP-6
Serial #	NA	Serial #	NA	Serial #	3113
Cal Due	NA	Cal Due	NA	Cal Due	3/24/03
Bkg	NA cpmα	Bkg	NA cpmβ	Bkg	364 cpmβ
Eff.	NA %	Eff.	NA %	Eff.	30.3 %
MDA	NA dpmα	MDA	NA dpmβ	MDA	302 dpmβ

Survey Type: Contamination
Building: Solar ponds
Location: N of C pond
Purpose: daily on D8 dozer and excavator

RWP #: 02-RISS-020

Date: 12/4/02 Time: 1500

[redacted]

RCT: NA / NA / NA
Print name Signature Emp. #

PRN/REN # : NA
Comments:

SURVEY RESULTS

Swipe #	LOCATION	ALPHA Swipe dpm/100cm2	ALPHA Direct dpm/100cm2	ALPHA Wipe dpm/wipe	BETA Swipe dpm/100cm2	BETA Direct dpm/100cm2	BETA Wipe dpm/wipe
1	cab and pedals	< 20	<42	NA	< 200	<302	NA
2	L rear upper tracks	< 20	<42	NA	< 200	<302	NA
3	L front upper tracks	< 20	<42	NA	< 200	<302	NA
4	L front bottom tracks	< 20	<42	NA	< 200	<302	NA
5	R exterior of bucket	< 20	<42	NA	< 200	<302	NA
6	center interior of bucket	< 20	<42	NA	< 200	<302	NA
7	R interior and exterior of bucket	< 20	<42	NA	< 200	<302	NA
8	R front upper tracks	< 20	<42	NA	< 200	<302	NA
9	R rear upper tracks	< 20	<42	NA	< 200	<302	NA
10	R rear lower tracks	< 20	<42	NA	< 200	<302	NA
11	cab and pedals	< 20	<42	NA	< 200	<302	NA
12	L rear upper tracks	< 20	<42	NA	< 200	<302	NA
13	L front upper tracks	< 20	<42	NA	< 200	<302	NA
14	L front bottom tracks	< 20	<42	NA	< 200	<302	NA
15	R interior of blade	< 20	<42	NA	< 200	<302	NA
16	center interior of blade	< 20	<42	NA	< 200	<302	NA
17	R interior of blade	< 20	<42	NA	< 200	<302	NA
18	R front upper tracks	< 20	<42	NA	< 200	<302	NA
19	R rear upper tracks	< 20	<42	NA	< 200	<302	NA
20	R rear lower tracks	< 20	<42	NA	< 200	<302	NA

Date Reviewed: 12-11-02 **RS Supervision:** S Odenwald [redacted]
Print Name Signature

317

Drawing Showing Survey Points

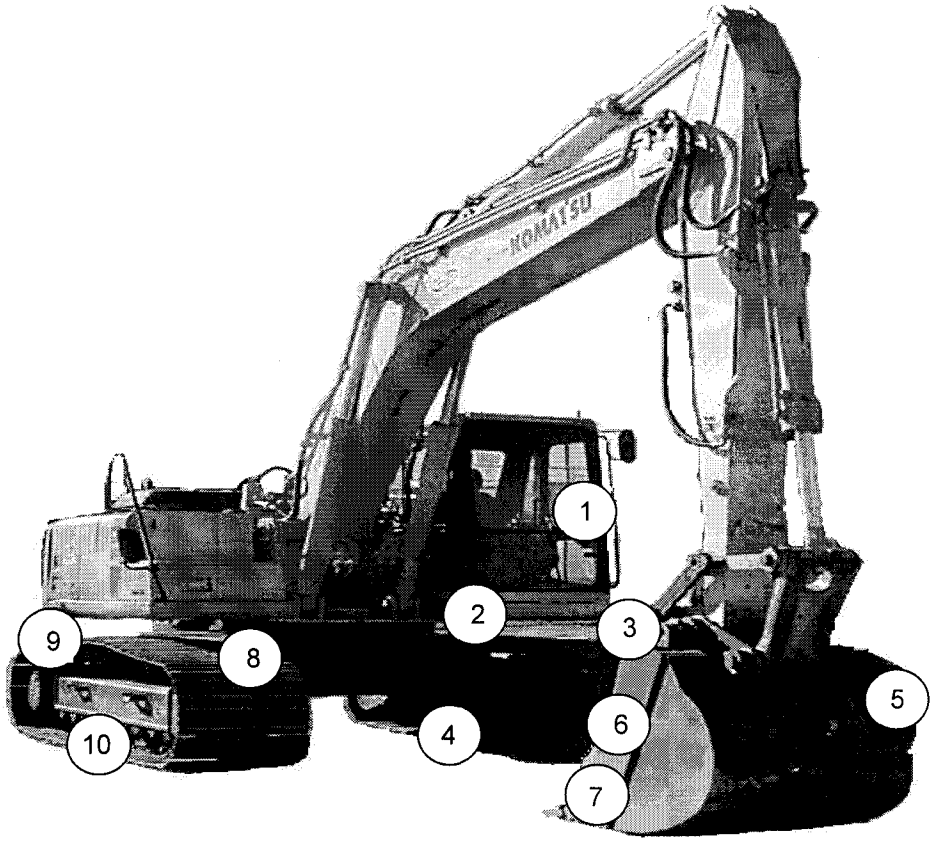

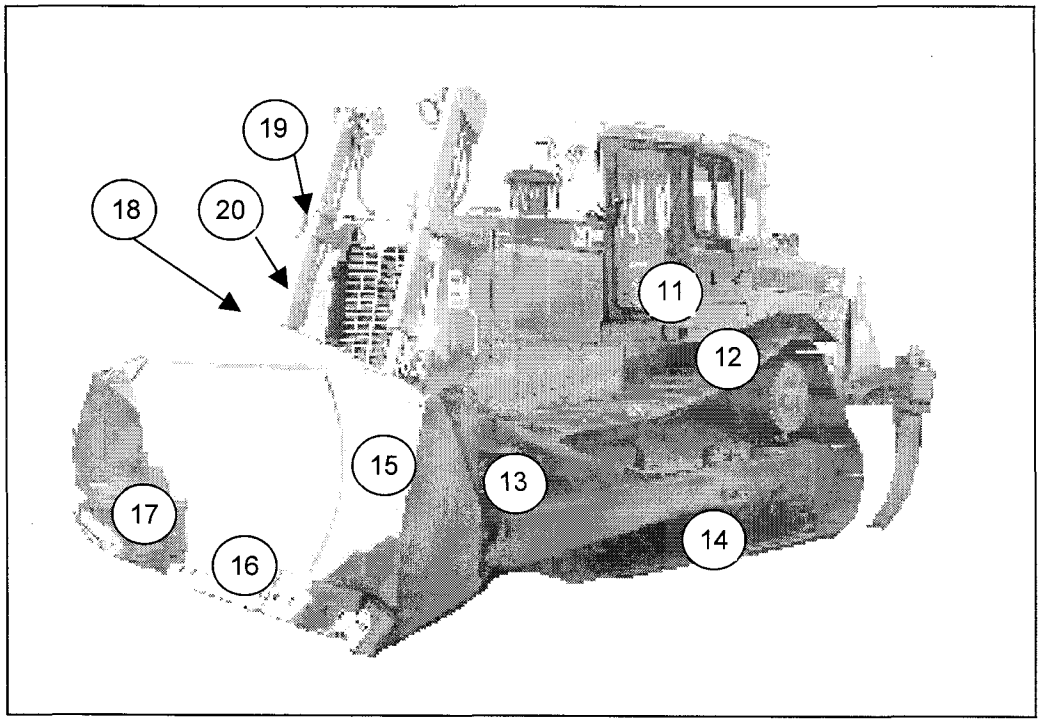

ROCKY FLATS ENVIRONMENTAL TECHNOLOGY SITE

INSTRUMENT DATA

Mfg.	Eberline	Mfg.	Eberline	Mfg.	NE Electra
Model	SAC-4	Model	BC-4	Model	DP-6
Serial #	959	Serial #	700	Serial #	3113
Cal Due	1/18/02	Cal Due	12/13/02	Cal Due	3/24/03
Bkg	0.3 cpmα	Bkg	32.5 cpmβ	Bkg	1 cpmα
Eff.	33 %	Eff.	25 %	Eff.	22.0 %
MDA	20 dpmα	MDA	200 dpmβ	MDA	33 dpmα

Mfg.	Eberline	Mfg.	Eberline	Mfg.	NE Electra
Model	SAC-4	Model	BC-4	Model	DP-6
Serial #	833	Serial #	911	Serial #	3113
Cal Due	2/28/03	Cal Due	10/30/03	Cal Due	3/24/03
Bkg	0.1 cpmα	Bkg	34.4 cpmβ	Bkg	365 cpmβ
Eff.	33 %	Eff.	25 %	Eff.	32.5 %
MDA	20 dpmα	MDA	200 dpmβ	MDA	282 dpmβ

Survey Type: Contamination
Building: Solar ponds
Location: N of C pond
Purpose: release of 325C excavator

RWP #: 02-RISS-020

Date: 12/3/02 Time: 1500

[redacted]

RCT: NA / NA / NA
Print name Signature Emp. #

PRN/REN # : NA
Comments:

SURVEY RESULTS

Swipe #	LOCATION	ALPHA Swipe dpm/100cm2	ALPHA Direct dpm/100cm2	ALPHA Wipe dpm/wipe	BETA Swipe dpm/100cm2	BETA Direct dpm/100cm2	BETA Wipe dpm/wipe
1	cab and pedals	< 20	<33	NA	< 200	<282	NA
2	left door and exterior	< 20	<33	NA	< 200	<282	NA
3	left track upper	< 20	<33	NA	< 200	<282	NA
4	left track upper	< 20	<33	NA	< 200	<282	NA
5	left track lower	< 20	<33	NA	< 200	<282	NA
6	left track lower	< 20	<33	NA	< 200	<282	NA
7	chassis upper L	< 20	<33	NA	< 200	<282	NA
8	chassis R underside	< 20	<33	NA	< 200	<282	NA
9	outside of claw	< 20	<33	NA	< 200	<282	NA
10	inside and teeth of claw	< 20	<33	NA	< 200	<282	NA
11	outside L of bucket	< 20	<33	NA	< 200	<282	NA
12	interior L of bucket	< 20	<33	NA	< 200	<282	NA
13	butterbar	< 20	<33	NA	< 200	<282	NA
14	interior R of bucket	< 20	<33	NA	< 200	<282	NA
15	exterior R of bucket	< 20	<33	NA	< 200	<282	NA
16	interior center of bucket	< 20	<33	NA	< 200	<282	NA
17	top right tracktop R track on rear	< 20	<33	NA	< 200	<282	NA
18	lower R track front	< 20	<33	NA	< 200	<282	NA
19	R track, inner, lower	< 20	<33	NA	< 200	<282	NA
20	engine compartment	< 20	<33	NA	< 200	<282	NA

Date Reviewed: 12/4/02 **RS Supervision:** [redacted]
Print Name Signature

Drawing Showing Survey Points

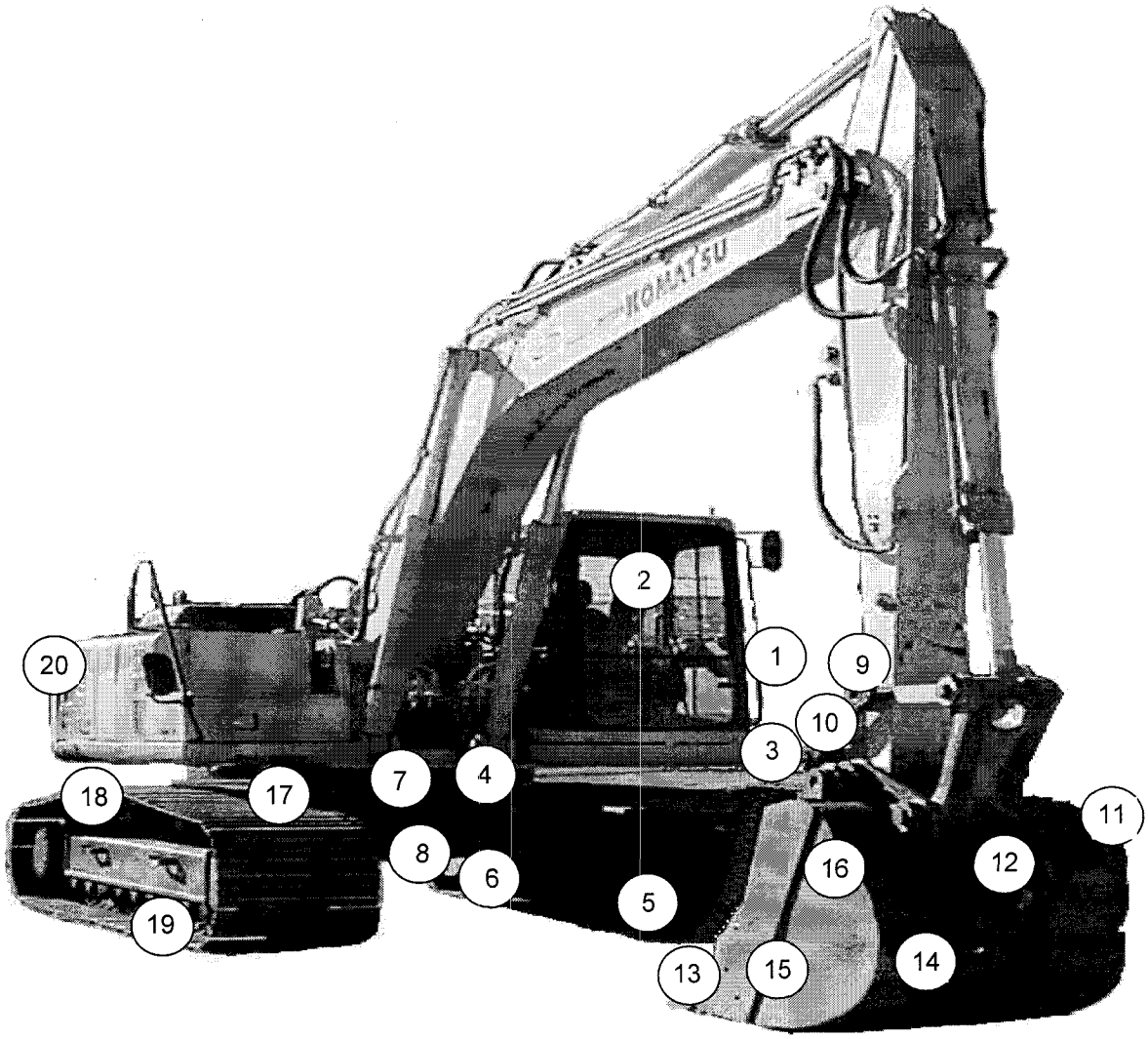

320

ROCKY FLATS ENVIRONMENTAL TECHNOLOGY SITE

INSTRUMENT DATA

Mfg.	Eberline	Mfg.	Eberline	Mfg.	NE Electra
Model	SAC-4	Model	BC-4	Model	DP-6
Serial #	959	Serial #	700	Serial #	3113
Cal Due	1/18/02	Cal Due	12/13/02	Cal Due	3/24/03
Bkg	0.3 cpmα	Bkg	32.5 cpmβ	Bkg	1 cpmα
Eff.	33 %	Eff.	25 %	Eff.	22.0 %
MDA	20 dpmα	MDA	200 dpmβ	MDA	33 dpmα

Mfg.	Eberline	Mfg.	Eberline	Mfg.	NE Electra
Model	SAC-4	Model	BC-4	Model	DP-6
Serial #	833	Serial #	911	Serial #	3113
Cal Due	2/28/03	Cal Due	10/30/03	Cal Due	3/24/03
Bkg	0.1 cpmα	Bkg	34.4 cpmβ	Bkg	365 cpmβ
Eff.	33 %	Eff.	25 %	Eff.	32.5 %
MDA	20 dpmα	MDA	200 dpmβ	MDA	282 dpmβ

Survey Type: Contamination
Building: Solar ponds
Location: N of C pond
Purpose: survey of orange sandbox

RWP #: 02-RISS-020

Date: 12/3/02 Time: 1500

[redacted]

RCT: NA / NA / NA
Print name Signature Emp. #

PRN/REN # : NA
Comments: The drawing is an exploded view of the sandbox used for sludge mixing

SURVEY RESULTS

Swipe #	LOCATION	ALPHA Swipe dpm/100cm2	ALPHA Direct dpm/100cm2	ALPHA Wipe dpm/wipe	BETA Swipe dpm/100cm2	BETA Direct dpm/100cm2	BETA Wipe dpm/wipe
1	West,outer,upper	0	236	NA	148	422	NA
2	West, outer, lower	0	91	NA	144	449	NA
3	West,mid,outer,lower NW	12	136	NA	104	280	NA
4	N, outer, upper NW	0	45	NA	128	498	NA
5	N,upper,outer, mid N	21	45	NA	116	0	NA
6	N, outer, upper rim NE	3	200	NA	124	0	NA
7	N,outer,mid,slant edge	3	45	NA	152	0	NA
8	N,inner,near top	3	300	NA	128	0	NA
9	N,inner,NE,mid	12	345	NA	156	0	NA
10	E,outer,upper,slant	0	18	NA	112	0	NA
11	E,outer,slant,lower	0	100	NA	156	0	NA
12	E,outer,upper SE end corner	0	73	NA	104	0	NA
13	E,inner,slant upper	0	209	NA	132	825	NA
14	S,outer,SE,lower near bottom	3	55	NA	108	0	NA
15	S,outer,upper mid along edge	0	327	NA	176	218	NA
16	S,outer,lower SW	3	27	NA	176	0	NA
17	S,outer,upper along edge	9	236	NA	136	0	NA
18	S,inner,SE,upper	3	455	NA	136	0	NA
19	S,inner,mid upper	3	336	NA	152	0	NA
20	S,inner,SW corner,upper	3	336	NA	136	1114	NA
21	W,inner, SW corner, top edge	3	355	NA	140	1003	NA

Date Reviewed: 1-8-03 **RS Supervision:** [redacted]
Print Name Signature

321

ROCKY FLATS ENVIRONMENTAL TECHNOLOGY SITE

Drawing Showing Survey Points

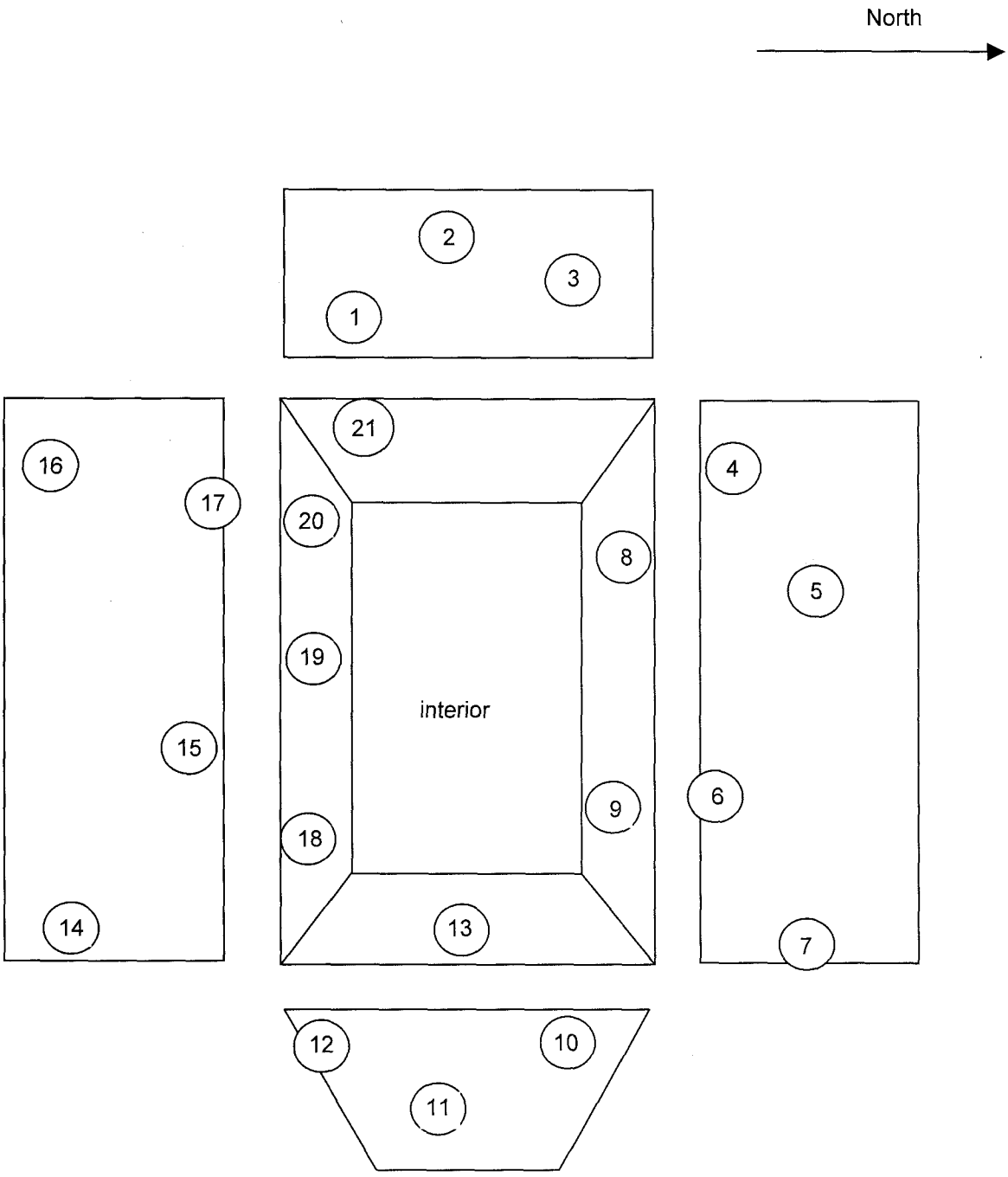

322

ROCKY FLATS ENVIRONMENTAL TECHNOLOGY SITE

INSTRUMENT DATA

Mfg.	Eberline	Mfg.	Eberline	Mfg.	NE Electra
Model	SAC-4	Model	BC-4	Model	DP-6
Serial #	959	Serial #	700	Serial #	3113
Cal Due	1/18/02	Cal Due	12/13/02	Cal Due	3/24/03
Bkg	0.3 cpmα	Bkg	32.5 cpmβ	Bkg	1 cpmα
Eff.	33 %	Eff.	25 %	Eff.	22.0 %
MDA	20 dpmα	MDA	200 dpmβ	MDA	33 dpmα

Mfg.	Eberline	Mfg.	Eberline	Mfg.	NE Electra
Model	SAC-4	Model	BC-4	Model	DP-6
Serial #	833	Serial #	911	Serial #	3113
Cal Due	2/28/03	Cal Due	10/30/03	Cal Due	3/24/03
Bkg	0.1 cpmα	Bkg	34.4 cpmβ	Bkg	365 cpmβ
Eff.	33 %	Eff.	25 %	Eff.	32.5 %
MDA	20 dpmα	MDA	200 dpmβ	MDA	282 dpmβ

Survey Type: Contamination

Building: Solar ponds

Location: N of C pond

Purpose: survey of orange sandbox

RWP #: 02-RISS-020

Date: 12/3/02 Time: 1500

[redacted]

RCT: NA / NA / NA

Print name Signature Emp. #

PRN/REN # : NA

Comments: The drawing is an exploded view of the sandbox used for sludge mixing

SURVEY RESULTS

Swipe #	LOCATION	ALPHA Swipe dpm/100cm2	ALPHA Direct dpm/100cm2	ALPHA Wipe dpm/wipe	BETA Swipe dpm/100cm2	BETA Direct dpm/100cm2	BETA Wipe dpm/wipe
1	West,outer,upper	0	236	NA	148	422	NA
2	West, outer, lower	0	91	NA	144	449	NA
3	West,mid,outer,lower NW	12	136	NA	104	280	NA
4	N, outer, upper NW	0	45	NA	128	498	NA
5	N,upper,outer, mid N	21	45	NA	116	0	NA
6	N, outer, upper rim NE	3	200	NA	124	0	NA
7	N,outer,mid,slant edge	3	45	NA	152	0	NA
8	N,inner,near top	3	300	NA	128	0	NA
9	N,inner,NE,mid	12	345	NA	156	0	NA
10	E,outer,upper,slant	0	18	NA	112	0	NA
11	E,outer,slant,lower	0	100	NA	156	0	NA
12	E,outer,upper SE end corner	0	73	NA	104	0	NA
13	E,inner,slant upper	0	209	NA	132	825	NA
14	S,outer,SE,lower near bottom	3	55	NA	108	0	NA
15	S,outer,upper mid along edge	0	327	NA	176	218	NA
16	S,outer,lower SW	3	27	NA	176	0	NA
17	S,outer,upper along edge	9	236	NA	136	0	NA
18	S,inner,SE,upper	3	455	NA	136	0	NA
19	S,inner,mid upper	3	336	NA	152	0	NA
20	S,inner,SW corner,upper	3	336	NA	136	1114	NA
21	W,inner, SW corner, top edge	3	355	NA	140	1003	NA

Date Reviewed: 12-11-02 **RS Supervision:** S. Gerwatt / [signature] [redacted]

Print Name Signature

323

Drawing Showing Survey Points

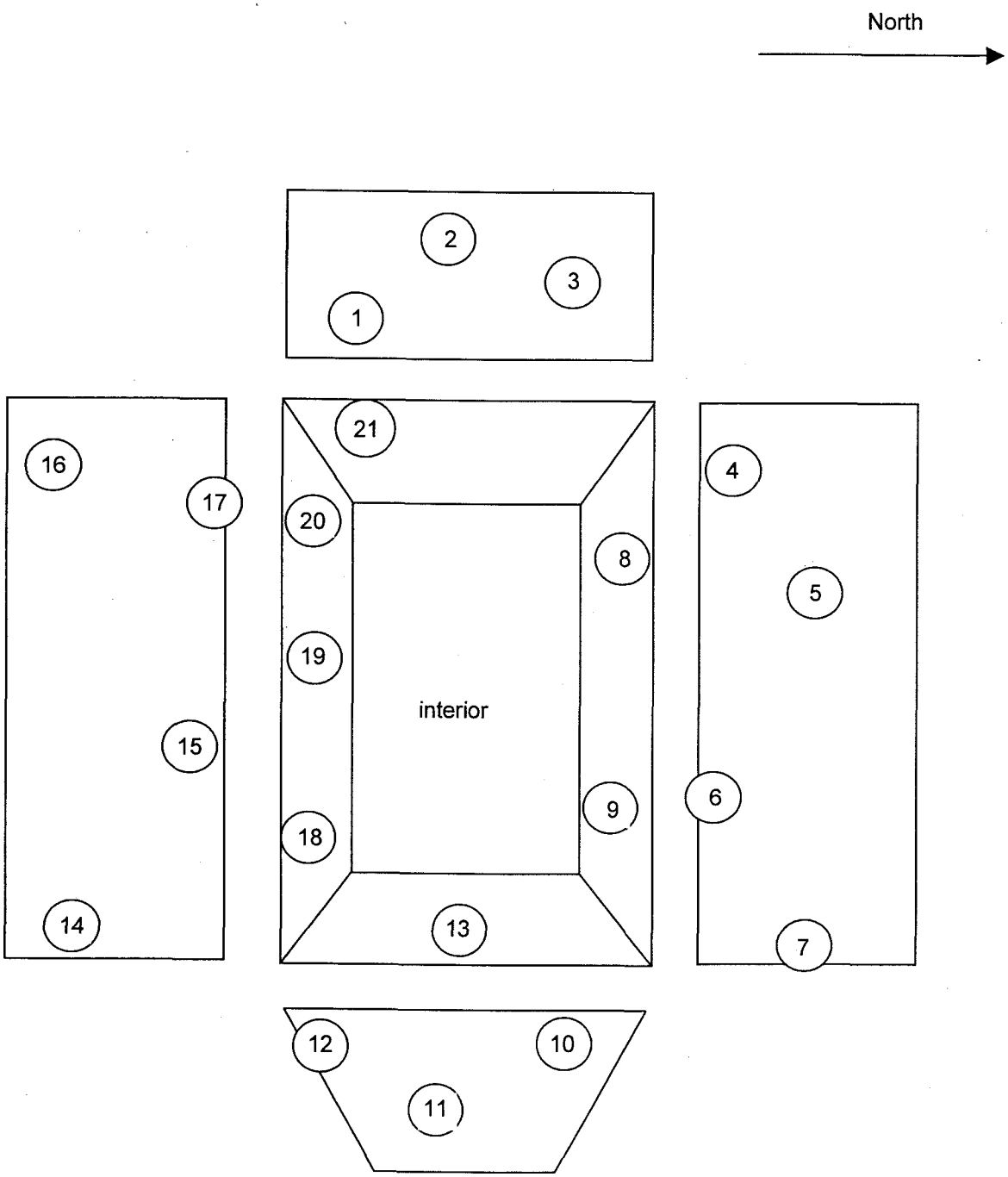

Standard Air Sample Analysis Form

High-Volume Air Samples

Bldg # 207a Purpose: cutting of inner pipe RWP#: 02-RISS-020

Isotope: Pu-239 Inhalation Class: w Filter Media: 47mm

Sample ID #	#1	NA	NA
Location	center west, of a pond	NA	NA
Sample Model / Serial #	hi vol/ RF095638	NA	NA
Sampler Calibration Due Date	2/11/02 0:00	NA	NA
Date / Time On	8/5/02 8:40	NA	NA
Date / Time Off	8/5/02 9:00	NA	NA
Total Run Time (min)	20	NA	NA
Average Flow Rate (cfm)	50	NA	NA
m3/min = (cfm x .0283)	1.415	NA	NA
Volume V=m3/min x time	28.3	NA	NA
COUNT ANALYSIS DATA:			
Date	8/5/02	8/13/02	NA
Time	13:30	16:30	NA
Instrument Model / Serial #	SAC-4/824	SAC-4/824	NA
Instrument Calibration Due Date	10/1/02	10/1/02	NA
Total Count	352	1	NA
Count Duration (min)	10	10	NA
Gross Count Rate (cpm)	35.2	0.1	NA
Background Count Rate (cpm)	0.1	0.1	NA
Net Count Rate (cpm)	35.1	0	NA
Net Activity (C1) in dpm	105.3	0	NA

SAC-4 (dpm = cpm x 3) ELECTRA (dpm = cpm x 6) LUDLUM 12-1A (dpm = cpm x 2)

CF = 0.7 4-in filter
CF = 0.2 47 - mm punchout
CF = 0.5 planchet

$$DAC = \frac{C1}{(V)(CF)(DAC_{REF})}$$

NA
NA

Decay Time (t4-t3)	NA	NA	NA
DAC_{REF}	4.8	4.8	NA
Correction Factor (CF)	0.2	0.2	NA
KOVAL Factor (K)	NA	NA	NA
DAC:	3.875883392	0	NA
[redacted]			NA
			NA
			NA

Approved by:
RS Supervision S GERNATT / [signature] / [redacted] / 82502
Print Name Signature Employee # Date

Standard Air Sample Analysis Form

High-Volume Air Samples

Bldg # 207a **Purpose:** cutting of inner pipe **RWP#:** 02-RISS-020

Isotope: Pu-239 **Inhalation Class:** w **Filter Media:** 47mm

Sample ID #	#1	NA	NA
Location	center west, of a pond	NA	NA
Sample Model / Serial #	hi vol/ RF095638	NA	NA
Sampler Calibration Due Date	11/2/02 0:00	NA	NA
Date / Time On	8/6/02 8:20	NA	NA
Date / Time Off	8/6/02 8:40	NA	NA
Total Run Time (min)	20	NA	NA
Average Flow Rate (cfm)	50	NA	NA
m3/min = (cfm x .0283)	1.415	NA	NA
Volume V=m3/min x time	28.3	NA	NA
COUNT ANALYSIS DATA:			
Date	080602 16:00:00 AM	8/13/02	NA
Time	16:00	16:30	NA
Instrument Model / Serial #	SAC-4/824	SAC-4 842	NA
Instrument Calibration Due Date	10/1/02	10/1/02	NA
Total Count	136	1	NA
Count Duration (min)	10	10	NA
Gross Count Rate (cpm)	13.6	0.1	NA
Background Count Rate (cpm)	0.1	0.1	NA
Net Count Rate (cpm)	13.5	0	NA
Net Activity (C1) in dpm	40.5	0	NA

SAC-4 (dpm = cpm x 3) ELECTRA (dpm = cpm x 6) LUDLUM 12-1A (dpm = cpm x 2)

CF = 0.7 4-in filter
CF = 0.2 47 - mm punchout
CF = 0.5 planchet

$$DAC = \frac{C1}{(V)(CF)(DAC_{REF})}$$

NA
NA

Decay Time (t4-t3)	NA	NA	NA
DAC REF	4.8	4.8	NA
Correction Factor (CF)	0.2	0.2	NA
KOVAL Factor (K)	NA	NA	NA
DAC:	1.490724382	0	NA
[redacted]			NA
			NA
			NA

Approved by:
RS Supervision

Print Name	Signature	[redacted]	Date
S Gerrott /	[signature] /		182502

326

Standard Air Sample Analysis Form

High-Volume Air Samples

Bldg # 788 Purpose: Break up of concrete between ponds RWP#: 02-RISS-020

Isotope: Pu Inhalation Class: W Filter Media: 4" fiber

Sample ID #	NA		
Location	West of B-2 pond		
Sample Model / Serial #	Hi Vol / Rf-09638		
Sampler Calibration Due Date	11/02		
Date / Time On	8/9/02 8:51		
Date / Time Off	8/9/02 9:11		
Total Run Time (min)	20		
Average Flow Rate (cfm)	50		
m3/min = (cfm x .0283)	1.415		
Volume V=m3/min x time	28.3		
COUNT ANALYSIS DATA:		RECOUNT #1	RECOUNT #2
Date	8/9/02	8/12/02	NA
Time	09:30	14:20	
Instrument Model / Serial #	2929 147735	2929 176090	
Instrument Calibration Due Date	1/25/03	11/30/02	
Total Count	4973	8	
Count Duration (min)	10	10	
Gross Count Rate (cpm)	497.3	0.8	
Background Count Rate (cpm)	0.3	0.7	
Net Count Rate (cpm)	497	0.1	
Net Activity (C1) in dpm	1491	0.3	NA

SAC-4 (dpm = cpm x 3) ELECTRA (dpm = cpm x 6) LUDLUM 12-1A (dpm = cpm x 2)

CF = 0.7 4-in filter
CF = 0.2 47 - mm punchout
CF = 0.5 planchet

$$DAC = \frac{C1}{(V)(CF)(DAC_{REF})}$$

Decay Time (t4-t3)	NA	NA	NA
DAC_{REF}	4.8	4.8	
Correction Factor (CF)	0.7	0.7	
Calculated DAC:	15.68	0.00	
[redacted]			
			NA

Approved by:
RS Supervision Steve Gernatt [redacted] 8/12/02
Print Name Signature [redacted] Date

Standard Air Sample Analysis Form

High-Volume Air Samples

Bldg # 788 Purpose: Baseline RWP#: 02-RISS-020

Isotope: Pu Inhalation Class: W Filter Media: 4" fiber

Sample ID #	NA		
Location	West of B-2 pond		
Sample Model / Serial #	Hi Vol / Rf-09638		
Sampler Calibration Due Date	11/02		
Date / Time On	8/9/02 8:26		
Date / Time Off	8/9/02 8:46		
Total Run Time (min)	20		
Average Flow Rate (cfm)	50		
m3/min = (cfm x .0283)	1.415		
Volume V=m3/min x time	28.3		
COUNT ANALYSIS DATA:		RECOUNT #1	RECOUNT #2
Date	8/9/02	8/12/02	NA
Time	09:30	14:20	
Instrument Model / Serial #	2929 176090	2929 147735	
Instrument Calibration Due Date	11/30/02	1/25/03	
Total Count	3684	5	
Count Duration (min)	10	10	
Gross Count Rate (cpm)	368.4	0.50	
Background Count Rate (cpm)	0.6	0.6	
Net Count Rate (cpm)	367.8	-0.1	
Net Activity (C1) in dpm	1103.4	-0.3	NA

SAC-4 (dpm = cpm x 3) ELECTRA (dpm = cpm x 6) LUDLUM 12-1A (dpm = cpm x 2)

CF = 0.7 4-in filter
CF = 0.2 47 - mm punchout
CF = 0.5 planchet

$$DAC = \frac{C1}{(V)(CF)(DAC_{REF})}$$

Decay Time (t4-t3)	NA	NA	NA
DAC_{REF}	4.8	4.8	
Correction Factor (CF)	0.7	0.7	
Calculated DAC:	11.60	0.00	
[redacted]			
			NA

Approved by:
RS Supervision Steve Gernatt / [signature] / [redacted] 8/12/02
Print Name Signature [redacted] Date

328 Rev. 12/01

Standard Air Sample Analysis Form

High-Volume Air Samples

Bldg # 788 Purpose: saw cutting claifier pad RWP#: 02-RISS-020

Isotope: Pu Inhalation Class: W Filter Media: 4" filter

Sample ID #	NA	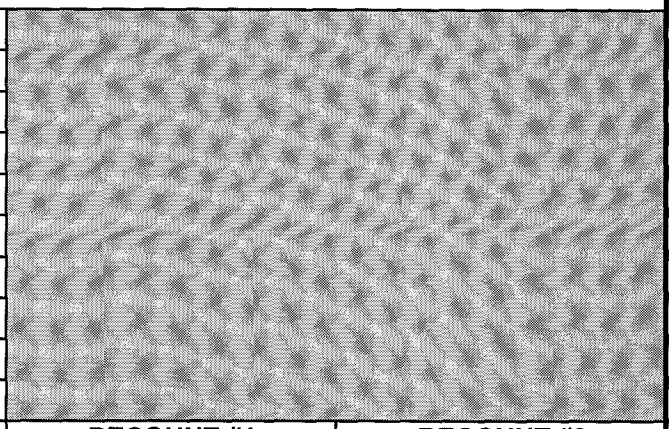	
Location	west of claifier pad		
Sample Model / Serial #	Hi vol RF-095381		
Sampler Calibration Due Date	3/3		
Date / Time On	8/15/02 15:41		
Date / Time Off	8/15/02 16:01		
Total Run Time (min)	20		
Average Flow Rate (cfm)	55		
m3/min = (cfm x .0283)	1.5565		
Volume V=m3/min x time	31.13		
COUNT ANALYSIS DATA:		RECOUNT #1	RECOUNT #2
Date	8/16/02	8/19/02	NA
Time	15:40	10:20	
Instrument Model / Serial #	SAC-4 824	SAC-4 824	
Instrument Calibration Due Date	10/1/02	10/1/02	
Total Count	31	7	
Count Duration (min)	10	10	
Gross Count Rate (cpm)	3.1	0.7	
Background Count Rate (cpm)	0.2	0.2	
Net Count Rate (cpm)	2.9	0.5	
Net Activity (C1) in dpm	8.7	1.5	NA

SAC-4 (dpm = cpm x 3) ELECTRA (dpm = cpm x 6) LUDLUM 12-1A (dpm = cpm x 2)

CF = 0.7 4-in filter
CF = 0.2 47 - mm punchout
CF = 0.5 planchet

$$DAC = \frac{C1}{(V)(CF)(DAC_{REF})}$$

Decay Time (t4-t3)	NA	NA	NA
DAC REF	4.8	4.8	
Correction Factor (CF)	0.2	0.2	
Calculated DAC:	0.29	0.05	
[redacted]			
			NA

Approved by: RS Supervision James w Smith James w Smith [redacted] 9-26-02

Print Name Signature Date

Standard Air Sample Analysis Form

High-Volume Air Samples

Bldg # 788 Purpose: Demo of B center pump pad RWP#: 02-RISS-020

Isotope: Pu Inhalation Class: W Filter Media: 4" filter

Sample ID #	NA		
Location	between A & B ponds		
Sample Model / Serial #	Hi vol RF-095381		
Sampler Calibration Due Date	3/3		
Date / Time On	8/16/02 12:52		
Date / Time Off	8/16/02 13:20		
Total Run Time (min)	28		
Average Flow Rate (cfm)	55		
m3/min = (cfm x .0283)	1.56		
Volume V=m3/min x time	43.58		
COUNT ANALYSIS DATA:		RECOUNT #1	RECOUNT #2
Date	8/16/02	8/19/02	NA
Time	15:50	10:20	
Instrument Model / Serial #	SAC-4 824	SAC-4 851	
Instrument Calibration Due Date	10/1/02	10/29/02	
Total Count	23	2	
Count Duration (min)	10	10	
Gross Count Rate (cpm)	2.3	0.4	
Background Count Rate (cpm)	0.2	0.2	
Net Count Rate (cpm)	2.1	0.2	
Net Activity (C1) in dpm	6.3	0.6	NA

SAC-4 (dpm = cpm x 3) ELECTRA (dpm = cpm x 6) LUDLUM 12-1A (dpm = cpm x 2)

CF = 0.7 4-in filter
CF = 0.2 47 - mm punchout
CF = 0.5 planchet

$$DAC = \frac{C1}{(V)(CF)(DAC_{REF})}$$

Decay Time (t4-t3)	NA	NA	NA
DAC_{REF}	4.8	4.8	
Correction Factor (CF)	0.2	0.2	
Calculated DAC:	0.15	0.01	
[redacted]			
			NA

Approved by: RS Supervision James W Smith (1) James W Smith [redacted] 10-26-02

Print Name Signature Date

Standard Air Sample Analysis Form

High-Volume Air Samples

Bldg # 788 Purpose: 788 threshold baseline RWP#: 02-RISS-20

Isotope: Pu Inhalation Class: W Filter Media: 47 mm punchout

Sample ID #	1	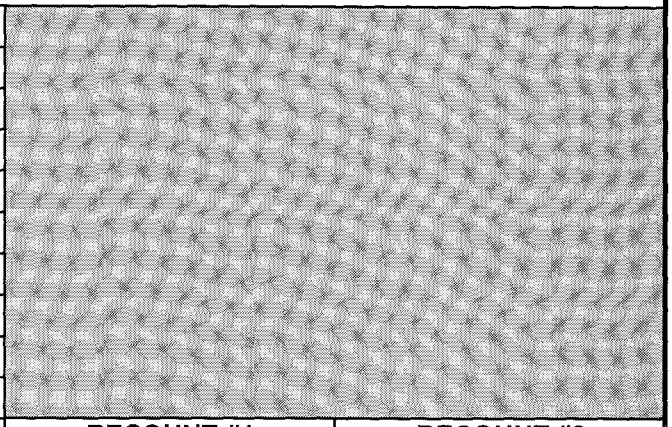	
Location	788		
Sample Model / Serial #	Hi Vol. / RF-95381		
Sampler Calibration Due Date	3 Mar		
Date / Time On	9/25/02 8:00		
Date / Time Off	9/25/02 8:20		
Total Run Time (min)	20		
Average Flow Rate (cfm)	60		
m3/min = (cfm x .0283)	1.70		
Volume V=m3/min x time	33.96		
COUNT ANALYSIS DATA:		RECOUNT #1	RECOUNT #2
Date	9/25/02	10/30/02	NA
Time	10:00	9:00	
Instrument Model / Serial #	SAC-4 824	SAC-4 959	
Instrument Calibration Due Date	10/1/02	1/18/03	
Total Count	3417	4	
Count Duration (min)	10	10	
Gross Count Rate (cpm)	341.7	0.4	
Background Count Rate (cpm)	0.3	0.2	
Net Count Rate (cpm)	341.4	0.2	
Net Activity (C1) in dpm	1024.2	0.6	NA

SAC-4 (dpm = cpm x 3) ELECTRA (dpm = cpm x 6) LUDLUM 12-1A (dpm = cpm x 2)

CF = 0.7 4-in filter
CF = 0.2 47 - mm punchout
CF = 0.5 planchet

$$DAC = \frac{C1}{(V)(CF)(DAC_{REF})}$$

Decay Time (t4-t3)	NA	NA	NA
DAC REF	4.8	4.8	
Correction Factor (CF)	0.2	0.2	
Calculated DAC:	31.42	0.02	
[redacted]			
			NA

Approved by: RS Supervision [redacted] / [redacted] / [redacted] / 11-2-02

Print Name Signature Date

Standard Air Sample Analysis Form

High-Volume Air Samples

Bldg # 788 Purpose: 788 Coverage RWP#: NA

Isotope: Pu Inhalation Class: W Filter Media: 47 mm punchout

Sample ID #	1		
Location	788		
Sample Model / Serial #	Hi Vol. / RF 95381		
Sampler Calibration Due Date	3/3/2002		
Date / Time On	9/25/02 8:25		
Date / Time Off	9/25/02 8:45		
Total Run Time (min)	20		
Average Flow Rate (cfm)	60		
m3/min = (cfm x .0283)	1.698		
Volume V=m3/min x time	33.96		
COUNT ANALYSIS DATA:		RECOUNT #1	RECOUNT #2
Date	9/25/02	9/26/02	10/30/02
Time	10:15	11:30	9:00
Instrument Model / Serial #	SAC-4 824	SAC-4 824	SAC-4 966
Instrument Calibration Due Date	10/1/02	10/1/02	11/6/02
Total Count	5381	73	2
Count Duration (min)	10	10	10
Gross Count Rate (cpm)	538.1	7.3	0.2
Background Count Rate (cpm)	0.3	0.1	0.5
Net Count Rate (cpm)	537.8	7.2	0
Net Activity (C1) in dpm	1613.4	21.6	0

SAC-4 (dpm = cpm x 3) ELECTRA (dpm = cpm x 6) LUDLUM 12-1A (dpm = cpm x 2)

CF = 0.7 4-in filter
CF = 0.2 47 - mm punchout
CF = 0.5 planchet

$$DAC = \frac{C1}{(V)(CF)(DAC_{REF})}$$

Decay Time (t4-t3)	NA		
DAC REF	4.8	4.8	4.8
Correction Factor (CF)	0.2	0.2	0.2
Calculated DAC:	49.49	0.66	0.00

[redacted]

Approved by:
RS Supervision

Print Name	Signature	[redacted]	Date
[signature]	[signature]		1/1-2-02

332 Rev. 12/01

Standard Air Sample Analysis Form

High-Volume Air Samples

Bldg # 788 Purpose: Soil removal RWP#: 02-RISS-020

Isotope: Pu Inhalation Class: W Filter Media: 4"

Sample ID #	NA		
Location	SS 400693		
Sample Model / Serial #	RF 095381		
Sampler Calibration Due Date	03/03		
Date / Time On	10/4/02 0840		
Date / Time Off	10/4/02 0925		
Total Run Time (min)	45		
Average Flow Rate (cfm)	65		
m3/min = (cfm x .0283)	1.8395		
Volume V=m3/min x time	82.7775		
COUNT ANALYSIS DATA:		RECOUNT #1	RECOUNT #2
Date	10/7/02	10/9/02	NA
Time	14:30	14:45	
Instrument Model / Serial #	SAC-4 959	SAC-4	
Instrument Calibration Due Date	1/18/03	1/18/03	
Total Count	6	6	
Count Duration (min)	10	10	
Gross Count Rate (cpm)	0.6	0.6	
Background Count Rate (cpm)	0	0.1	
Net Count Rate (cpm)	0.6	0.5	
Net Activity (C1) in dpm	1.8	1.5	NA

SAC-4 (dpm = cpm x 3) ELECTRA (dpm = cpm x 6) LUDLUM 12-1A (dpm = cpm x 2)

CF = 0.7 4-in filter
CF = 0.2 47 - mm punchout
CF = 0.5 planchet

DAC = $\frac{C1}{(V)(CF)(DAC_{REF})}$

Decay Time (t4-t3)	NA	NA	NA
DAC REF	4.8	4.8	
Correction Factor (CF)	0.2	0.2	
Calculated DAC:	0.02	0.02	
[redacted]			
			NA

Approved by: RS Supervision

Print Name	Signature	[redacted]	Date
[illegible]	[illegible]		10-18-02

Standard Air Sample Analysis Form

High-Volume Air Samples

Bldg # 788 Purpose: Soil removal RWP#: 02-RISS-020

Isotope: Pu Inhalation Class: W Filter Media: 4"

Sample ID #	NA		
Location	SS 402893		
Sample Model / Serial #	RF 095381		
Sampler Calibration Due Date	03/03		
Date / Time On	10/4/02 1420		
Date / Time Off	10/4/02 1440		
Total Run Time (min)	20		
Average Flow Rate (cfm)	70		
m3/min = (cfm x .0283)	1.981		
Volume V=m3/min x time	39.62		
COUNT ANALYSIS DATA:		RECOUNT #1	RECOUNT #2
Date	10/7/02	10/9/02	NA
Time	14:30	14:55	
Instrument Model / Serial #	SAC-4 959	SAC-4	
Instrument Calibration Due Date	1/18/03	1/18/02	
Total Count	8	3	
Count Duration (min)	10	10	
Gross Count Rate (cpm)	0.8	0.3	
Background Count Rate (cpm)	0	0.1	
Net Count Rate (cpm)	0.8	0.2	
Net Activity (C1) in dpm	2.4	0.6	NA

SAC-4 (dpm = cpm x 3) ELECTRA (dpm = cpm x 6) LUDLUM 12-1A (dpm = cpm x 2)

CF = 0.7 4-in filter
CF = 0.2 47 - mm punchout
CF = 0.5 planchet

$$DAC = \frac{C1}{(V)(CF)(DAC_{REF})}$$

Decay Time (t4-t3)	NA	NA	NA
DAC REF	4.8	4.8	
Correction Factor (CF)	0.2	0.2	
Calculated DAC:	0.06	0.02	
[redacted]			
			NA

Approved by: RS Supervision [redacted] / [redacted] / [redacted] / 10-13-02

Print Name Signature Date

Standard Air Sample Analysis Form

High-Volume Air Samples

Bldg # 788 Purpose: Baseline/ hot spots RWP#: 02-RISS-020

Isotope: Pu Inhalation Class: W Filter Media: 4"

Sample ID #	NA		
Location	SS403093		
Sample Model / Serial #	RF 095381		
Sampler Calibration Due Date	03/03		
Date / Time On	10/7/02 0800		
Date / Time Off	10/7/02 0820		
Total Run Time (min)	20		
Average Flow Rate (cfm)	70		
m3/min = (cfm x .0283)	1.981		
Volume V=m3/min x time	39.62		
COUNT ANALYSIS DATA:		RECOUNT #1	RECOUNT #2
Date	10/7/02	10/10/02	NA
Time	13:15	14:00	
Instrument Model / Serial #	SAC-4 959	SAC-4 959	
Instrument Calibration Due Date	1/18/03	1/18/03	
Total Count	79	6	
Count Duration (min)	10	10	
Gross Count Rate (cpm)	7.9	0.6	
Background Count Rate (cpm)	0	0.2	
Net Count Rate (cpm)	7.9	0.4	
Net Activity (C1) in dpm	23.7	1.2	NA

SAC-4 (dpm = cpm x 3) ELECTRA (dpm = cpm x 6) LUDLUM 12-1A (dpm = cpm x 2)

CF = 0.7 4-in filter
CF = 0.2 47 - mm punchout
CF = 0.5 planchet

$$DAC = \frac{C1}{(V)(CF)(DAC_{REF})}$$

Decay Time (t4-t3)	NA	NA	NA
DAC REF	4.8	4.8	
Correction Factor (CF)	0.2	0.2	
Calculated DAC:	0.62	0.03	
[redacted]			
			NA

Approved by:
RS Supervision

Print Name	Signature	[redacted]	Date
[signature]	[signature]		10-13-02

335

Standard Air Sample Analysis Form

High-Volume Air Samples

Bldg # 788 Purpose: Soil removal RWP#: 02-RISS-020

Isotope: Pu Inhalation Class: W Filter Media: 4"

Sample ID #	NA		
Location	SS400593		
Sample Model / Serial #	RF 095381		
Sampler Calibration Due Date	03/03		
Date / Time On	10/7/02 0830		
Date / Time Off	10/7/02 0905		
Total Run Time (min)	35		
Average Flow Rate (cfm)	65		
m3/min = (cfm x .0283)	1.8395		
Volume V=m3/min x time	64.3825		
COUNT ANALYSIS DATA:		RECOUNT #1	RECOUNT #2
Date	10/7/02	10/10/02	10/016/02
Time	14:10	14:11	13:40
Instrument Model / Serial #	SAC-4 959	SAC-4 959	SAC-4 959
Instrument Calibration Due Date	1/18/03	1/18/03	1/18/02
Total Count	134	53	53
Count Duration (min)	10	10	10
Gross Count Rate (cpm)	13.4	5.3	5.3
Background Count Rate (cpm)	0	0.2	0
Net Count Rate (cpm)	13.4	5.1	5.3
Net Activity (C1) in dpm	40.2	15.3	15.9

SAC-4 (dpm = cpm x 3) ELECTRA (dpm = cpm x 6) LUDLUM 12-1A (dpm = cpm x 2)

CF = 0.7 4-in filter
CF = 0.2 47 - mm punchout
CF = 0.5 planchet

$$DAC = \frac{C1}{(V)(CF)(DAC_{REF})}$$

Decay Time (t4-t3)	NA	NA	NA
DAC REF	4.8	4.8	4.8
Correction Factor (CF)	0.2	0.2	0.2
Calculated DAC:	0.65	0.25	0.26

[redacted]

Approved by:
RS Supervision

Print Name	Signature	[redacted]	Date
[signature]	[signature]	[redacted]	11-3-02

336

Standard Air Sample Analysis Form

High-Volume Air Samples

Bldg # 788 Purpose: Soil removal RWP#: 02-RISS-020

Isotope: Pu Inhalation Class: W Filter Media: 4"

Sample ID #	NA		
Location	SS 403093/ 404373		
Sample Model / Serial #	RF 095381		
Sampler Calibration Due Date	03/03		
Date / Time On	10/7/02 9:30		
Date / Time Off	10/7/02 10:00		
Total Run Time (min)	30		
Average Flow Rate (cfm)	70		
m3/min = (cfm x .0283)	1.981		
Volume V=m3/min x time	59.43		
COUNT ANALYSIS DATA:		RECOUNT #1	RECOUNT #2
Date	10/7/02	10/10/02	NA
Time	14:30	14:20	
Instrument Model / Serial #	SAC-4 959	SAC-4 959	
Instrument Calibration Due Date	1/18/03	1/18/03	
Total Count	56	9	
Count Duration (min)	10	10	
Gross Count Rate (cpm)	5.6	0.9	
Background Count Rate (cpm)	0	0.2	
Net Count Rate (cpm)	5.6	0.7	
Net Activity (C1) in dpm	16.8	2.1	NA

SAC-4 (dpm = cpm x 3) ELECTRA (dpm = cpm x 6) LUDLUM 12-1A (dpm = cpm x 2)

CF = 0.7 4-in filter
CF = 0.2 47 - mm punchout
CF = 0.5 planchet

$$DAC = \frac{C1}{(V)(CF)(DAC_{REF})}$$

Decay Time (t4-t3)	NA	NA	NA
DAC REF	4.8	4.8	
Correction Factor (CF)	0.2	0.2	
Calculated DAC:	0.29	0.04	
[redacted]			
			NA

Approved by:
RS Supervision

Print Name	Signature	[redacted]	Date
[signature]	[signature]		10-13-02

337

Standard Air Sample Analysis Form

High-Volume Air Samples

Bldg # ~~886~~ Solar Ponds M. Purpose: Baseline RWP#: 02-RISS-20

Isotope: Pu Inhalation Class: W Filter Media: ~~Planchet~~ 47mm Punch out.

Sample ID #	NA		
Location	Clairifier pad		
Sample Model / Serial #	Hi Vol. / RF-95381		
Sampler Calibration Due Date			
Date / Time On	10/14/02 12:40		
Date / Time Off	10/14/02 13:00		
Total Run Time (min)	20		
Average Flow Rate (cfm)	65		
m3/min = (cfm x .0283)	1.84		
Volume V=m3/min x time	36.79		
COUNT ANALYSIS DATA:		RECOUNT #1	RECOUNT #2
Date	10/15/02	10/16/02	NA
Time	09:20	9:00	
Instrument Model / Serial #	SAC-4 966	SAC-4 966	
Instrument Calibration Due Date	11/6/02	11/6/02	
Total Count	62	15	
Count Duration (min)	10	10	
Gross Count Rate (cpm)	6.2	1.5	
Background Count Rate (cpm)	0	0.1	
Net Count Rate (cpm)	6.2	1.4	
Net Activity (C1) in dpm	18.6	4.2	NA

SAC-4 (dpm = cpm x 3) ELECTRA (dpm = cpm x 6) LUDLUM 12-1A (dpm = cpm x 2)

CF = 0.7 4-in filter
CF = 0.2 47 - mm punchout
CF = 0.5 planchet

$$DAC = \frac{C1}{(V)(CF)(DAC_{REF})}$$

Decay Time (t4-t3)	NA	NA	NA
DAC REF	4.8	4.8	
Correction Factor (CF)	0.2	0.2	
Calculated DAC:	0.53	0.12	
[redacted]			
			NA

Approved by:
RS Supervision S Gennaro / [signature] / [redacted] / 11/29/02

Print Name Signature Date

338 Rev. 12/01

Standard Air Sample Analysis Form

High-Volume Air Samples

Bldg # Solar Purpose: B Pond Coverage RWP#: 02-RISS-26

Isotope: Pu Inhalation Class: W Filter Media: 47 mm punchout

Sample ID #	1		
Location	B Ponds		
Sample Model / Serial #	Hi Vol. / RF 95381		
Sampler Calibration Due Date	3/3/2002		
Date / Time On	10/30/02 14:05		
Date / Time Off	10/30/02 14:20		
Total Run Time (min)	20		
Average Flow Rate (cfm)	70		
m3/min = (cfm x .0283)	1.981		
Volume V=m3/min x time	39.62		
COUNT ANALYSIS DATA:		RECOUNT #1	RECOUNT #2
Date	10/30/02	11/4/02	N/A
Time	10:15	13:00	
Instrument Model / Serial #	SAC-4 959	SAC-4 959	
Instrument Calibration Due Date	1/18/03	1/18/03	
Total Count	4322	1	
Count Duration (min)	10	10	
Gross Count Rate (cpm)	432.2	0.1	
Background Count Rate (cpm)	0.2	0.3	
Net Count Rate (cpm)	432	0	
Net Activity (C1) in dpm	1296	0	N/A

SAC-4 (dpm = cpm x 3) ELECTRA (dpm = cpm x 6) LUDLUM 12-1A (dpm = cpm x 2)

CF = 0.7 4-in filter
CF = 0.2 47 - mm punchout
CF = 0.5 planchet

$$DAC = \frac{C1}{(V)(CF)(DAC_{REF})}$$

Decay Time (t4-t3)	NA	NA	N/A
DAC REF	4.8	4.8	
Correction Factor (CF)	0.2	0.2	
Calculated DAC:	34.07	0.00	
[redacted]			
			N/A

Approved by:
RS Supervision [signature] / [signature] / [redacted] / 11/29/02

Print Name Signature Date

339 Rev. 12/01

Standard Air Sample Analysis Form

High-Volume Air Samples

Bldg # Solar Purpose: B Pond Coverage RWP#: 02-RISS-26

Isotope: Pu Inhalation Class: W Filter Media: 47 mm punchout

Sample ID #	1		
Location	B Ponds		
Sample Model / Serial #	Hi Vol. / RF 95381		
Sampler Calibration Due Date	3/3/2002		
Date / Time On	10/31/02 15:25		
Date / Time Off	10/31/02 15:45		
Total Run Time (min)	20		
Average Flow Rate (cfm)	70		
m3/min = (cfm x .0283)	1.981		
Volume V=m3/min x time	39.62		
COUNT ANALYSIS DATA:		RECOUNT #1	RECOUNT #2
Date	10/31/02	11/4/02	N/A
Time	15:45	13:00	
Instrument Model / Serial #	SAC-4 959	SAC-4 959	
Instrument Calibration Due Date	1/18/03	1/18/03	
Total Count	6109	3	
Count Duration (min)	10	10	
Gross Count Rate (cpm)	610.9	0.3	
Background Count Rate (cpm)	0.1	0.3	
Net Count Rate (cpm)	610.8	0	V
Net Activity (C1) in dpm	1832.4	0	N/A

SAC-4 (dpm = cpm x 3) ELECTRA (dpm = cpm x 6) LUDLUM 12-1A (dpm = cpm x 2)

CF = 0.7 4-in filter
CF = 0.2 47 - mm punchout
CF = 0.5 planchet

$$DAC = \frac{C1}{(V)(CF)(DAC_{REF})}$$

Decay Time (t4-t3)	NA	NA	N/A
DAC REF	4.8	4.8	
Correction Factor (CF)	0.2	0.2	
Calculated DAC:	48.18	0.00	
[redacted]			
			U
			N/A

Approved by: RS Supervision [redacted] / [redacted] / [redacted] / 11/29/02

Print Name Signature Date

Standard Air Sample Analysis Form

High-Volume Air Samples

Bldg # Solar Purpose: B Pond Coverage RWP#: 02-RISS-26

Isotope: Pu Inhalation Class: W Filter Media: 47 mm punchout

Sample ID #	1		
Location	B Ponds		
Sample Model / Serial #	Hi Vol. / RF 95381		
Sampler Calibration Due Date	3/3/2002		
Date / Time On	11/1/02 13:01		
Date / Time Off	11/1/02 13:21		
Total Run Time (min)	20		
Average Flow Rate (cfm)	70		
m3/min = (cfm x .0283)	1.981		
Volume V=m3/min x time	39.62		
COUNT ANALYSIS DATA:		RECOUNT #1	RECOUNT #2
Date	11/1/02	11/4/02	N/A
Time	15:50	13:00	
Instrument Model / Serial #	SAC-4 959	SAC-4 959	
Instrument Calibration Due Date	1/18/03	1/18/03	
Total Count	482	2	
Count Duration (min)	10	10	
Gross Count Rate (cpm)	48.2	0.2	
Background Count Rate (cpm)	0.1	0.3	
Net Count Rate (cpm)	48.1	0	
Net Activity (C1) in dpm	144.3	0	N/A

SAC-4 (dpm = cpm x 3) ELECTRA (dpm = cpm x 6) LUDLUM 12-1A (dpm = cpm x 2)

CF = 0.7 4-in filter
CF = 0.2 47 - mm punchout
CF = 0.5 planchet

$$DAC = \frac{C1}{(V)(CF)(DAC_{REF})}$$

Decay Time (t4-t3)	NA	NA	N/A
DAC REF	4.8	4.8	
Correction Factor (CF)	0.2	0.2	
Calculated DAC:	3.79	0.00	
[redacted]			
			N/A

Approved by: RS Supervision [redacted] / [redacted] / [redacted] / 11/29/02

Print Name Signature Date

Standard Air Sample Analysis Form

High-Volume Air Samples

Bldg # Solar Purpose: A Pond Coverage RWP#: 02-RISS-26

Isotope: Pu Inhalation Class: W Filter Media: 47 mm punchout

Sample ID #	1		
Location	A Pond		
Sample Model / Serial #	Hi Vol. / RF 95381		
Sampler Calibration Due Date	3/3/~~2002~~ 2003		
Date / Time On	11/4/02 9:41		
Date / Time Off	11/4/02 10:01		
Total Run Time (min)	20		
Average Flow Rate (cfm)	70		
m3/min = (cfm x .0283)	1.981		
Volume V=m3/min x time	39.62		
COUNT ANALYSIS DATA:		RECOUNT #1	RECOUNT #2
Date	11/4/02	11/11/02	N/A
Time	13:20	13:45	
Instrument Model / Serial #	SAC-4 959	SAC-4 959	
Instrument Calibration Due Date	1/18/03	1/18/03	
Total Count	40	3	
Count Duration (min)	10	10	
Gross Count Rate (cpm)	4	0.3	
Background Count Rate (cpm)	0.3	0.1	
Net Count Rate (cpm)	3.7	0.2	
Net Activity (C1) in dpm	11.1	0.6	N/A

SAC-4 (dpm = cpm x 3) ELECTRA (dpm = cpm x 6) LUDLUM 12-1A (dpm = cpm x 2)

CF = 0.7 4-in filter
CF = 0.2 47 - mm punchout
CF = 0.5 planchet

$$DAC = \frac{C1}{(V)(CF)(DAC_{REF})}$$

Decay Time (t4-t3)	NA	NA	N/A
DAC REF	4.8	4.8	
Correction Factor (CF)	0.2	0.2	
Calculated DAC:	0.29	0.02	
[redacted]			
[redacted]			
[redacted]			N/A

Approved by: RS Supervision [redacted] / [redacted] / [redacted] / 11/29/02

Print Name Signature Date

342 Rev. 12/01

Standard Air Sample Analysis Form

High-Volume Air Samples

Bldg # Solar Purpose: A Pond Coverage RWP#: 02-RISS-26

Isotope: Pu Inhalation Class: W Filter Media: 47 mm punchout

Sample ID #	1		
Location	A Pond		
Sample Model / Serial #	Hi Vol. / RF 95381		
Sampler Calibration Due Date	3/3/~~2002~~ 2003		
Date / Time On	11/6/02 9:00		
Date / Time Off	11/6/02 9:20		
Total Run Time (min)	20		
Average Flow Rate (cfm)	70		
m3/min = (cfm x .0283)	1.981		
Volume V=m3/min x time	39.62		
COUNT ANALYSIS DATA:		RECOUNT #1	RECOUNT #2
Date	11/4/02	11/11/02	N/A
Time	11:00	13:45	
Instrument Model / Serial #	SAC-4 959	SAC-4 959	
Instrument Calibration Due Date	1/18/03	1/18/03	
Total Count	133	9	
Count Duration (min)	10	10	
Gross Count Rate (cpm)	13.3	0.9	
Background Count Rate (cpm)	0.2	0.1	
Net Count Rate (cpm)	13.1	0.8	
Net Activity (C1) in dpm	39.3	2.4	N/A

SAC-4 (dpm = cpm x 3) ELECTRA (dpm = cpm x 6) LUDLUM 12-1A (dpm = cpm x 2)

CF = 0.7 4-in filter
CF = 0.2 47 - mm punchout
CF = 0.5 planchet

$$DAC = \frac{C1}{(V)(CF)(DAC_{REF})}$$

Decay Time (t4-t3)	NA	NA	N/A
DAC REF	4.8	4.8	
Correction Factor (CF)	0.2	0.2	
Calculated DAC:	1.03	0.06	
[redacted]			
			N/A

Approved by: RS Supervision [redacted] / 11/29/02

Print Name Signature Date

Standard Air Sample Analysis Form

High-Volume Air Samples

Bldg # Solar Purpose: Baseline air sample RWP#: 02-RISS-26

Isotope: Pu Inhalation Class: W Filter Media: 47 mm punchout

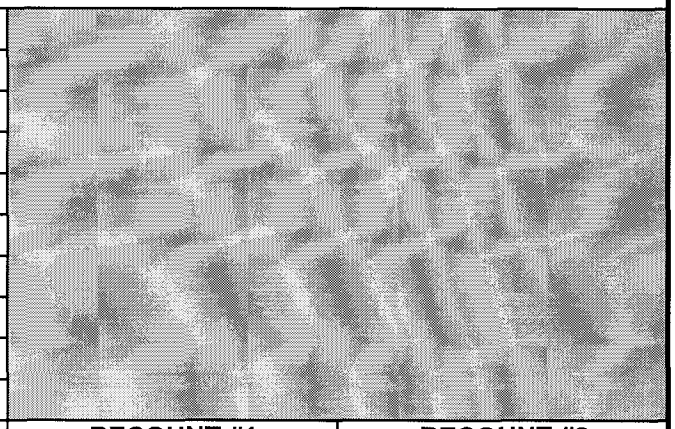

Sample ID #	1		
Location	A Pond		
Sample Model / Serial #	Hi Vol. / RF 95381		
Sampler Calibration Due Date	3/3/2003		
Date / Time On	11/12/02 7:18		
Date / Time Off	11/12/02 7:38		
Total Run Time (min)	20		
Average Flow Rate (cfm)	65		
m3/min = (cfm x .0283)	1.8395		
Volume V=m3/min x time	36.79		
COUNT ANALYSIS DATA:		**RECOUNT #1**	**RECOUNT #2**
Date	11/12/02	11/16/02	NA
Time	11:50	14:45	
Instrument Model / Serial #	SAC-4 959	SAC-4 833	
Instrument Calibration Due Date	1/18/03	2/28/03	
Total Count	31	0	
Count Duration (min)	10	10	
Gross Count Rate (cpm)	3.1	0	
Background Count Rate (cpm)	0.1	0.1	
Net Count Rate (cpm)	3	0	
Net Activity (C1) in dpm	9	0	NA

SAC-4 (dpm = cpm x 3) ELECTRA (dpm = cpm x 6) LUDLUM 12-1A (dpm = cpm x 2)

CF = 0.7 4-in filter
CF = 0.2 47 - mm punchout
CF = 0.5 planchet

$$DAC = \frac{C1}{(V)(CF)(DAC_{REF})}$$

Decay Time (t4-t3)	NA	NA	NA
DAC REF	4.8	4.8	
Correction Factor (CF)	0.2	0.2	
Calculated DAC:	0.25	0.00	
[redacted]			
			NA

Approved by:
RS Supervision S Cornett [signature] [redacted] 112902

Print Name Signature Date

344

Standard Air Sample Analysis Form

High-Volume Air Samples

Bldg # Solar Purpose: B North Pond Berm pushing coverage RWP#: 02-RISS-26

Isotope: Pu Inhalation Class: W Filter Media: 47 mm punchout

Sample ID #	1	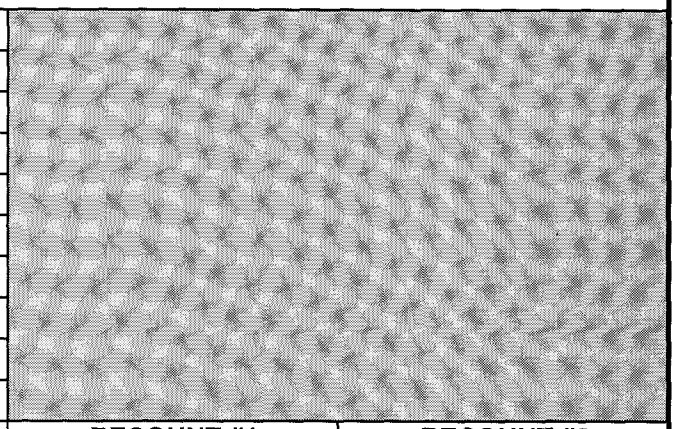	
Location	B Pond North		
Sample Model / Serial #	Hi Vol. / RF 95381		
Sampler Calibration Due Date	~~3/3/2002~~ Dec 3		
Date / Time On	11/12/02 8:32		
Date / Time Off	11/12/02 8:52		
Total Run Time (min)	20		
Average Flow Rate (cfm)	65		
m3/min = (cfm x .0283)	1.8395		
Volume V=m3/min x time	36.79		
COUNT ANALYSIS DATA:		RECOUNT #1	RECOUNT #2
Date	11/12/02	11/16/02	NA
Time	10:00	14:45	
Instrument Model / Serial #	SAC-4 833	SAC-4 952	
Instrument Calibration Due Date	2/28/03	1/28/03 ~~1/18/03~~ 11/16/	
Total Count	41	2	
Count Duration (min)	10	10	
Gross Count Rate (cpm)	4.1	0.2	
Background Count Rate (cpm)	0.2	0.1	
Net Count Rate (cpm)	3.9	0.1	
Net Activity (C1) in dpm	11.7	0.3	NA

SAC-4 (dpm = cpm x 3) ELECTRA (dpm = cpm x 6) LUDLUM 12-1A (dpm = cpm x 2)

CF = 0.7 4-in filter
CF = 0.2 47 - mm punchout
CF = 0.5 planchet

$$DAC = \frac{C1}{(V)(CF)(DAC_{REF})}$$

Decay Time (t4-t3)	NA	NA	NA
DAC REF	4.8	4.8	
Correction Factor (CF)	0.2	0.2	
Calculated DAC:	0.33	0.01	
[redacted]			NA

Approved by: RS Supervision [redacted] 11/29/02

Print Name / Signature / Date

Standard Air Sample Analysis Form

High-Volume Air Samples

Bldg # Solar Purpose: C Pond Baseline RWP#: 02-RISS-26

Isotope: Pu Inhalation Class: W Filter Media: 47 mm punchout

Sample ID #	1	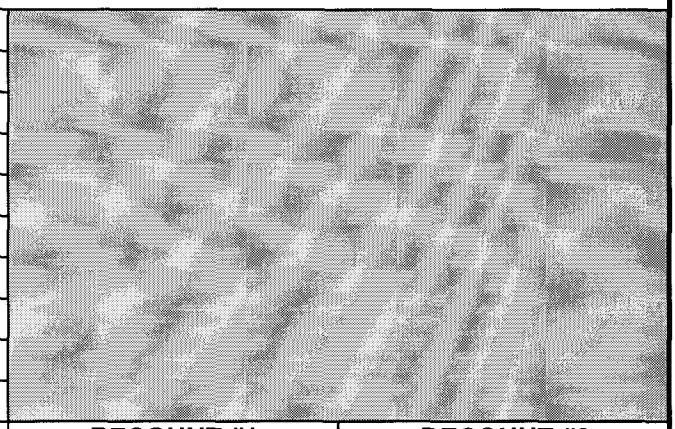	
Location	C Pond		
Sample Model / Serial #	Hi Vol. / RF 95645		
Sampler Calibration Due Date	1/3/2002 2003 mg 11/16/02		
Date / Time On	11/13/02 8:15		
Date / Time Off	11/13/02 8:35		
Total Run Time (min)	20		
Average Flow Rate (cfm)	55		
m3/min = (cfm x .0283)	1.5565		
Volume V=m3/min x time	31.13		
COUNT ANALYSIS DATA:		**RECOUNT #1**	**RECOUNT #2**
Date	11/13/02	11/16/02	NA
Time	16:30	14:45	
Instrument Model / Serial #	SAC-4 959	SAC-4 959	
Instrument Calibration Due Date	2/28/03	3/18/03 ~~1/3/03~~ mg 11/16/02	
Total Count	111	4	
Count Duration (min)	10	10	
Gross Count Rate (cpm)	11.1	0.4	
Background Count Rate (cpm)	0.1	0.4	
Net Count Rate (cpm)	11	0	
Net Activity (C1) in dpm	33	0	NA

SAC-4 (dpm = cpm x 3) ELECTRA (dpm = cpm x 6) LUDLUM 12-1A (dpm = cpm x 2)

CF = 0.7 4-in filter
CF = 0.2 47 - mm punchout
CF = 0.5 planchet

$$DAC = \frac{C1}{(V)(CF)(DAC_{REF})}$$

Decay Time (t4-t3)	NA	NA	NA
DAC REF	4.8	4.8	
Correction Factor (CF)	0.2	0.2	
Calculated DAC:	1.10	0.00	
[redacted]			
			NA

Approved by: RS Supervision [redacted] 11/25/02

Print Name Signature Date

346

Standard Air Sample Analysis Form

High-Volume Air Samples

Bldg # Solar Purpose: B Pond Coverage RWP#: 02-RISS-26

Isotope: Pu Inhalation Class: W Filter Media: 47 mm punchout

Sample ID #	1		
Location	B Pond		
Sample Model / Serial #	Hi Vol. / RF 95645		
Sampler Calibration Due Date	1/3/~~2002~~ 2003		
Date / Time On	11/13/02 12:52		
Date / Time Off	11/13/02 13:02		
Total Run Time (min)	10		
Average Flow Rate (cfm)	55		
m3/min = (cfm x .0283)	1.5565		
Volume V=m3/min x time	15.565		
COUNT ANALYSIS DATA:		RECOUNT #1	RECOUNT #2
Date	11/13/02	11/16/02	NA
Time	16:30	14:45	
Instrument Model / Serial #	SAC-4 959	SAC-4 959	
Instrument Calibration Due Date	1/18/03	1/18/03	
Total Count	84	2	
Count Duration (min)	10	10	
Gross Count Rate (cpm)	8.4	0.2	
Background Count Rate (cpm)	0.1	0.4	
Net Count Rate (cpm)	8.3	0	
Net Activity (C1) in dpm	24.9	0	NA

SAC-4 (dpm = cpm x 3) ELECTRA (dpm = cpm x 6) LUDLUM 12-1A (dpm = cpm x 2)

CF = 0.7 4-in filter
CF = 0.2 47 - mm punchout
CF = 0.5 planchet

$$DAC = \frac{C1}{(V)(CF)(DAC_{REF})}$$

Decay Time (t4-t3)	NA	NA	NA
DAC REF	4.8	4.8	
Correction Factor (CF)	0.2	0.2	
Calculated DAC:	1.67	0.00	
[redacted]			
			N/A

Approved by: RS Supervision [redacted] 1/12/02

Print Name Signature Date

347 Rev. 12/01

Standard Air Sample Analysis Form

High-Volume Air Samples

Bldg # Solar Purpose: C Pond Coverage RWP#: 02-RISS-26

Isotope: Pu Inhalation Class: W Filter Media: 47 mm punchout

Sample ID #	1		
Location	C Pond		
Sample Model / Serial #	Hi Vol. / RF 95645		
Sampler Calibration Due Date	1/3/2003		
Date / Time On	11/13/02 13:05		
Date / Time Off	11/13/02 13:30		
Total Run Time (min)	25		
Average Flow Rate (cfm)	55		
m3/min = (cfm x .0283)	1.5565		
Volume V=m3/min x time	38.9125		
COUNT ANALYSIS DATA:		RECOUNT #1	RECOUNT #2
Date	11/14/02	11/16/02	NA
Time	8:35	14:45	
Instrument Model / Serial #	SAC-4 959	SAC-4 833	
Instrument Calibration Due Date	1/18/03	2/28/03	
Total Count	81	1	
Count Duration (min)	10	10	
Gross Count Rate (cpm)	8.1	0.1	
Background Count Rate (cpm)	0	0.1	
Net Count Rate (cpm)	8.1	0	
Net Activity (C1) in dpm	24.3	0	NA

SAC-4 (dpm = cpm x 3) ELECTRA (dpm = cpm x 6) LUDLUM 12-1A (dpm = cpm x 2)

CF = 0.7 4-in filter
CF = 0.2 47 - mm punchout
CF = 0.5 planchet

$$DAC = \frac{C1}{(V)(CF)(DAC_{REF})}$$

Decay Time (t4-t3)	NA	NA	NA
DAC REF	4.8	4.8	
Correction Factor (CF)	0.2	0.2	
Calculated DAC:	0.65	0.00	
[redacted]			
			NA

Approved by:
RS Supervision [signature] / [signature] / [redacted] / 11/29/02

Print Name Signature Date

348

Standard Air Sample Analysis Form

High-Volume Air Samples

Bldg # Solar Purpose: C Pond Coverage RWP#: 02-RISS-26

Isotope: Pu Inhalation Class: W Filter Media: 47 mm punchout

Sample ID #	1	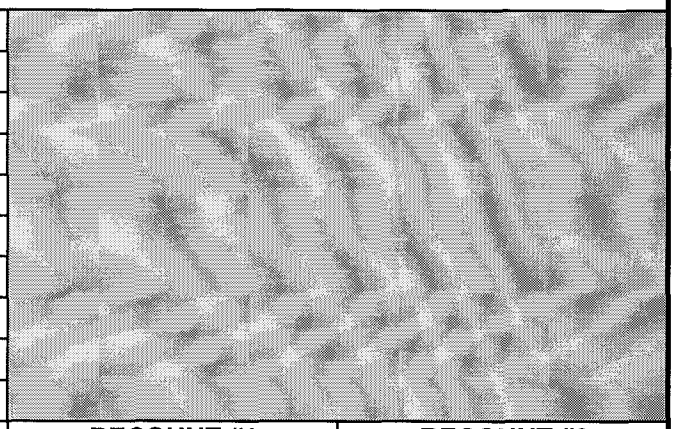	
Location	C Pond		
Sample Model / Serial #	Hi Vol. / RF 95645		
Sampler Calibration Due Date	1/3/~~2002~~ 2003 mg 11/12/02		
Date / Time On	11/13/02 15:00		
Date / Time Off	11/13/02 15:20		
Total Run Time (min)	20		
Average Flow Rate (cfm)	55		
m3/min = (cfm x .0283)	1.5565		
Volume V=m3/min x time	31.13		
COUNT ANALYSIS DATA:		RECOUNT #1	RECOUNT #2
Date	11/13/02	11/16/02	NA
Time	16:30	14:45	
Instrument Model / Serial #	SAC-4 833	SAC-4 963	
Instrument Calibration Due Date	2/28/03	1/3/03	
Total Count	908	5	
Count Duration (min)	10	10	
Gross Count Rate (cpm)	90.8	0.5	
Background Count Rate (cpm)	0	0.2	
Net Count Rate (cpm)	90.8	0.3	
Net Activity (C1) in dpm	272.4	0.9	NA

SAC-4 (dpm = cpm x 3) ELECTRA (dpm = cpm x 6) LUDLUM 12-1A (dpm = cpm x 2)

CF = 0.7 4-in filter
CF = 0.2 47 - mm punchout
CF = 0.5 planchet

$$DAC = \frac{C1}{(V)(CF)(DAC_{REF})}$$

Decay Time (t4-t3)	NA	NA	NA
DAC REF	4.8	4.8	
Correction Factor (CF)	0.2	0.2	
Calculated DAC:	9.12	0.03	
[redacted]			
			NA

Approved by: RS Supervision [redacted] 1/12/02

Print Name Signature Date

Standard Air Sample Analysis Form

High-Volume Air Samples

Bldg # Solar Purpose: A Pond Baseline RWP#: 02-RISS-26

Isotope: Pu Inhalation Class: W Filter Media: 47 mm punchout

Sample ID #	1		
Location	A Pond		
Sample Model / Serial #	Hi Vol. / RF 95381		
Sampler Calibration Due Date	3/3/~~2002~~ 2003		
Date / Time On	11/14/02 7:15		
Date / Time Off	11/14/02 7:35		
Total Run Time (min)	20		
Average Flow Rate (cfm)	70		
m3/min = (cfm x .0283)	1.981		
Volume V=m3/min x time	39.62		
COUNT ANALYSIS DATA:		RECOUNT #1	RECOUNT #2
Date	11/14/02	11/16/02	NA
Time	15:00	14:45	
Instrument Model / Serial #	SAC-4 833	SAC-4 959	
Instrument Calibration Due Date	2/28/03	1/18/03	
Total Count	4525	20	
Count Duration (min)	10	10	
Gross Count Rate (cpm)	452.5	2	
Background Count Rate (cpm)	0.1	0.4	
Net Count Rate (cpm)	452.4	1.6	
Net Activity (C1) in dpm	1357.2	4.8	NA

SAC-4 (dpm = cpm x 3) ELECTRA (dpm = cpm x 6) LUDLUM 12-1A (dpm = cpm x 2)

CF = 0.7 4-in filter
CF = 0.2 47 - mm punchout
CF = 0.5 planchet

$$DAC = \frac{C1}{(V)(CF)(DAC_{REF})}$$

Decay Time (t4-t3)	NA	NA	NA
DAC REF	4.8	4.8	
Correction Factor (CF)	0.2	0.2	
Calculated DAC:	35.68	0.13	
[redacted]			
			NA

Approved by:
RS Supervision

Print Name	Signature	[redacted]	Date
[signature]	[signature]		1/12/02

350 Rev. 12/01

Standard Air Sample Analysis Form

High-Volume Air Samples

Bldg # S. P. Purpose: Pumping of C pond RWP#: 02-RISS-026

Isotope: Pu Inhalation Class: W Filter Media: 47 mm punchout

Sample ID #	NA		
Location	East of c pond		
Sample Model / Serial #	Hi vol RF-95645		
Sampler Calibration Due Date	1/3		
Date / Time On	11/14/02 13:00		
Date / Time Off	11/14/02 13:20	2	
Total Run Time (min)	20		
Average Flow Rate (cfm)	60		
m3/min = (cfm x .0283)	1.70		
Volume V=m3/min x time	33.96		
COUNT ANALYSIS DATA:		RECOUNT #1	RECOUNT #2
Date	11/14/02	11/19/02	NA
Time	17:10	15:30	
Instrument Model / Serial #	SAC-4 959	SAC-4 957	
Instrument Calibration Due Date	1/18/03	1/31/03	
Total Count	123	7	
Count Duration (min)	10	10	
Gross Count Rate (cpm)	12.3	0.7	
Background Count Rate (cpm)	0.1	0.1	
Net Count Rate (cpm)	12.2	0.6	
Net Activity (C1) in dpm	36.6	1.8	NA

SAC-4 (dpm = cpm x 3) ELECTRA (dpm = cpm x 6) LUDLUM 12-1A (dpm = cpm x 2)

CF = 0.7 4-in filter
CF = 0.2 47 - mm punchout
CF = 0.5 planchet

$$DAC = \frac{C1}{(V)(CF)(DAC_{REF})}$$

Decay Time (t4-t3)	NA	NA	NA
DAC REF	4.8	4.8	
Correction Factor (CF)	0.2	0.2	
Calculated DAC:	1.12	0.06	
[redacted]			
			NA

Approved by:
RS Supervision

Print Name	Signature	[redacted]	Date
[signature]	[signature]		1/12/02

351 Rev. 12/01

Standard Air Sample Analysis Form

High-Volume Air Samples

Bldg # Solar Purpose: A Pond Coverage RWP#: 02-RISS-26

Isotope: Pu Inhalation Class: W Filter Media: 47 mm punchout

Sample ID #	1	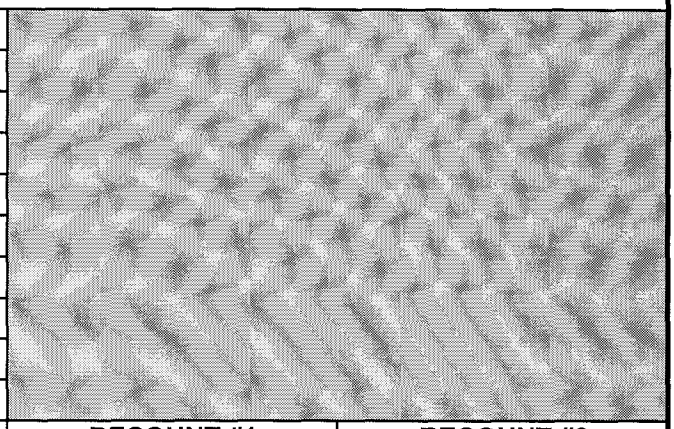	
Location	A Pond		
Sample Model / Serial #	Hi Vol. / RF 95381		
Sampler Calibration Due Date	3/3/2002 2003 w/ Hi Vol 2		
Date / Time On	11/14/02 13:00		
Date / Time Off	11/14/02 13:40		
Total Run Time (min)	40		
Average Flow Rate (cfm)	60		
m3/min = (cfm x .0283)	1.698		
Volume V=m3/min x time	67.92		
COUNT ANALYSIS DATA:		RECOUNT #1	RECOUNT #2
Date	11/14/02	11/16/02	NA
Time	15:00	14:45	
Instrument Model / Serial #	SAC-4 833	SAC-4 963	
Instrument Calibration Due Date	2/28/03	1/3/03	
Total Count	226	8	
Count Duration (min)	10	10	
Gross Count Rate (cpm)	22.6	0.8	
Background Count Rate (cpm)	0.1	0.2	
Net Count Rate (cpm)	22.5	0.6	
Net Activity (C1) in dpm	67.5	1.8	NA

SAC-4 (dpm = cpm x 3) ELECTRA (dpm = cpm x 6) LUDLUM 12-1A (dpm = cpm x 2)

CF = 0.7 4-in filter
CF = 0.2 47 - mm punchout
CF = 0.5 planchet

$$DAC = \frac{C1}{(V)(CF)(DAC_{REF})}$$

Decay Time (t4-t3)	NA	NA	NA
DAC_{REF}	4.8	4.8	
Correction Factor (CF)	0.2	0.2	
Calculated DAC:	1.04	0.03	
[redacted]			
			NA

Approved by: RS Supervision [redacted] 1/12/02

Print Name Signature Date

Standard Air Sample Analysis Form

High-Volume Air Samples

Bldg # S. P. Purpose: Pumping C pond RWP#: 02-RISS-026

Isotope: Pu Inhalation Class: W Filter Media: 47 mm punchout

Sample ID #	NA		
Location	East of c pond		
Sample Model / Serial #	Hi/ vol RF-95381		
Sampler Calibration Due Date	3/3		
Date / Time On	11/15/02 13:10		
Date / Time Off	11/15/02 13:36		
Total Run Time (min)	26		
Average Flow Rate (cfm)	60		
m3/min = (cfm x .0283)	1.698		
Volume V=m3/min x time	44.15		
COUNT ANALYSIS DATA:		RECOUNT #1	RECOUNT #2
Date	11/15/02	11/19/02	NA
Time	M 11/19/02 ~~12:21~~ 1421	13:45	
Instrument Model / Serial #	SAC-4 959	SAC-4 952	
Instrument Calibration Due Date	1/18/03	1/31/03	
Total Count	2357	3	
Count Duration (min)	10	10	
Gross Count Rate (cpm)	235.7	0.3	
Background Count Rate (cpm)	0.4	0	
Net Count Rate (cpm)	235.3	0.3	
Net Activity (C1) in dpm	705.9	0.9	NA

SAC-4 (dpm = cpm x 3) ELECTRA (dpm = cpm x 6) LUDLUM 12-1A (dpm = cpm x 2)

CF = 0.7 4-in filter
CF = 0.2 47 - mm punchout
CF = 0.5 planchet

$$DAC = \frac{C1}{(V)(CF)(DAC_{REF})}$$

Decay Time (t4-t3)	NA	NA	NA
DAC REF	4.8	4.8	
Correction Factor (CF)	0.2	0.2	
Calculated DAC:	16.66	0.02	
	[redacted]		
			NA

Approved by: RS Supervision S/[redacted] / [redacted] [redacted] 1/12/02

Print Name Signature Date

Standard Air Sample Analysis Form

High-Volume Air Samples

Bldg # S. P. Purpose: Filling in A & B ponds RWP#: 02-RISS-026

Isotope: Pu Inhalation Class: W Filter Media: 47 mm punchout

Sample ID #	NA	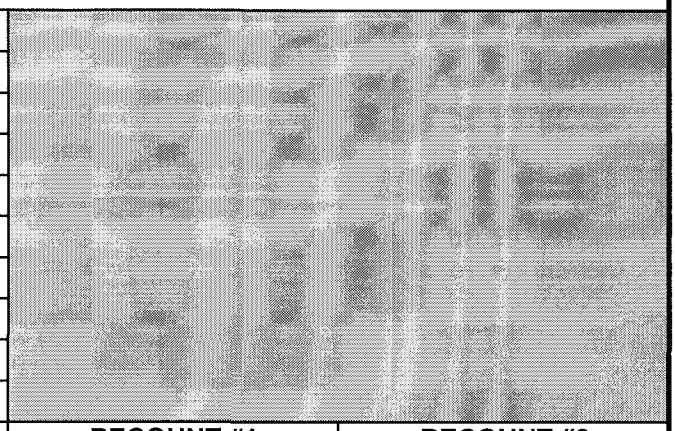	
Location	east of B ponds		
Sample Model / Serial #	Hi/ vol RF-95656		
Sampler Calibration Due Date	1/3		
Date / Time On	11/15/02 13:11		
Date / Time Off	11/15/02 13:31		
Total Run Time (min)	20		
Average Flow Rate (cfm)	75		
m3/min = (cfm x .0283)	2.12		
Volume V=m3/min x time	42.45		
COUNT ANALYSIS DATA:		RECOUNT #1	RECOUNT #2
Date	11/15/02	11/19/02	NA
Time	14:21	13:45	
Instrument Model / Serial #	SAC-4 833	SAC-4 963	
Instrument Calibration Due Date	2/28/03	1/3/03	
Total Count	2085	5	
Count Duration (min)	10	10	
Gross Count Rate (cpm)	208.5	0.5	
Background Count Rate (cpm)	0.1	0	
Net Count Rate (cpm)	208.4	0.5	
Net Activity (C1) in dpm	625.2	1.5	NA

SAC-4 (dpm = cpm x 3) ELECTRA (dpm = cpm x 6) LUDLUM 12-1A (dpm = cpm x 2)

CF = 0.7 4-in filter
CF = 0.2 47 - mm punchout
CF = 0.5 planchet

$$DAC = \frac{C1}{(V)(CF)(DAC_{REF})}$$

Decay Time (t4-t3)	NA	NA	NA
DAC REF	4.8	4.8	
Correction Factor (CF)	0.2	0.2	
Calculated DAC:	15.34	0.04	
[redacted]			
			NA

Approved by: RS Supervision [redacted] / [redacted] / [redacted] / 11/29/02

Print Name Signature Date

Standard Air Sample Analysis Form

High-Volume Air Samples

Bldg # S. P. Purpose: Filling in Solar pond A RWP#: 02-RISS-026

Isotope: Pu Inhalation Class: W Filter Media: 47 mm punchout

Sample ID #	NA		
Location	East of A pond		
Sample Model / Serial #	Hi Vol. / RF-95381		
Sampler Calibration Due Date	3/3		
Date / Time On	11/16/02 13:15		
Date / Time Off	11/16/02 13:35		
Total Run Time (min)	20		
Average Flow Rate (cfm)	60		
m3/min = (cfm x .0283)	1.70		
Volume V=m3/min x time	33.96		
COUNT ANALYSIS DATA:		RECOUNT #1	RECOUNT #2
Date	11/16/02	11/19/02	NA
Time	15:30	14:50	
Instrument Model / Serial #	SAC-4 959	SAC-4 952	
Instrument Calibration Due Date	1/18/03	1/31/02	
Total Count	505	1	
Count Duration (min)	10	10	
Gross Count Rate (cpm)	50.5	0.1	
Background Count Rate (cpm)	0.4	0	
Net Count Rate (cpm)	50.1	0.1	
Net Activity (C1) in dpm	150.3	0.3	NA

SAC-4 (dpm = cpm x 3) ELECTRA (dpm = cpm x 6) LUDLUM 12-1A (dpm = cpm x 2)

CF = 0.7 4-in filter
CF = 0.2 47 - mm punchout
CF = 0.5 planchet

$$DAC = \frac{C1}{(V)(CF)(DAC_{REF})}$$

Decay Time (t4-t3)	NA	NA	NA
DAC_{REF}	4.8	4.8	
Correction Factor (CF)	0.2	0.2	
Calculated DAC:	4.61	0.01	
[redacted]			
			NA

Approved by: RS Supervision [redacted] / [redacted] / [redacted] / 11/25/02

Print Name Signature Date

Standard Air Sample Analysis Form

High-Volume Air Samples

Bldg # S. P. Purpose: Morning baseline RWP#: 02-RISS-026

Isotope: Pu Inhalation Class: W Filter Media: Planchet

Sample ID #	NA		
Location	east of C pond		
Sample Model / Serial #	Hi Vol. / RF-95381		
Sampler Calibration Due Date	3/3		
Date / Time On	11/18/02 8:21		
Date / Time Off	11/18/02 8:41		
Total Run Time (min)	20		
Average Flow Rate (cfm)	60		
m3/min = (cfm x .0283)	1.70		
Volume V=m3/min x time	33.96		
COUNT ANALYSIS DATA:		RECOUNT #1	RECOUNT #2
Date	11/18/02	11/21/02	NA
Time	17:20	17:00	
Instrument Model / Serial #	SAC-4 959	SAC-4 959	
Instrument Calibration Due Date	1/18/03	1/18/03	
Total Count	118	1	
Count Duration (min)	10	10	
Gross Count Rate (cpm)	11.8	0.1	
Background Count Rate (cpm)	0.1	0.2	
Net Count Rate (cpm)	11.7	-0.1	
Net Activity (C1) in dpm	35.1	-0.3	NA

SAC-4 (dpm = cpm x 3) ELECTRA (dpm = cpm x 6) LUDLUM 12-1A (dpm = cpm x 2)

CF = 0.7 4-in filter
CF = 0.2 47 - mm punchout
CF = 0.5 planchet

DAC = $\frac{C1}{(V)(CF)(DAC_{REF})}$

Decay Time (t4-t3)	NA	NA	NA
DAC REF	4.8	4.8	
Correction Factor (CF)	0.2	0.2	
Calculated DAC:	1.08	< 0.01	
	[redacted]		
			NA

Approved by: RS Supervision [redacted] / [redacted] / [redacted] 11/29/02

Print Name Signature Date

356 Rev. 12/01

Standard Air Sample Analysis Form

High-Volume Air Samples

Bldg # S. P. Purpose: Pushing in A ponds RWP#: 02-RISS-026

Isotope: Pu Inhalation Class: W Filter Media: 47 mm punchout

Sample ID #	NA		
Location	East of A pond		
Sample Model / Serial #	Hi Vol. / RF-95381		
Sampler Calibration Due Date	3/3		
Date / Time On	11/18/02 13:06		
Date / Time Off	11/18/02 13:22		
Total Run Time (min)	16		
Average Flow Rate (cfm)	65		
m3/min = (cfm x .0283)	1.84		
Volume V=m3/min x time	29.43		
COUNT ANALYSIS DATA:		RECOUNT #1	RECOUNT #2
Date	11/18/02	11/21/02	NA
Time	17:20	17:00	
Instrument Model / Serial #	SAC-4 833	SAC-4 833	
Instrument Calibration Due Date	2/28/03	2/28/03	
Total Count	109	4	
Count Duration (min)	10	10	
Gross Count Rate (cpm)	10.9	0.4	
Background Count Rate (cpm)	0.1	0.1	
Net Count Rate (cpm)	10.8	0.3	
Net Activity (C1) in dpm	32.4	0.9	NA

SAC-4 (dpm = cpm x 3) ELECTRA (dpm = cpm x 6) LUDLUM 12-1A (dpm = cpm x 2)

CF = 0.7 4-in filter
CF = 0.2 47 - mm punchout
CF = 0.5 planchet

$$DAC = \frac{C1}{(V)(CF)(DAC_{REF})}$$

Decay Time (t4-t3)	NA	NA	NA
DAC REF	4.8	4.8	
Correction Factor (CF)	0.2	0.2	
Calculated DAC:	1.15	0.03	
[redacted]			
			NA

Approved by: RS Supervision [redacted] / [redacted] / [redacted] 1/12/02

Print Name Signature Date

Standard Air Sample Analysis Form

High-Volume Air Samples

Bldg # Solar Purpose: C Pond Coverage RWP#: 02-RISS-26

Isotope: Pu Inhalation Class: W Filter Media: 47 mm punchout

Sample ID #	1	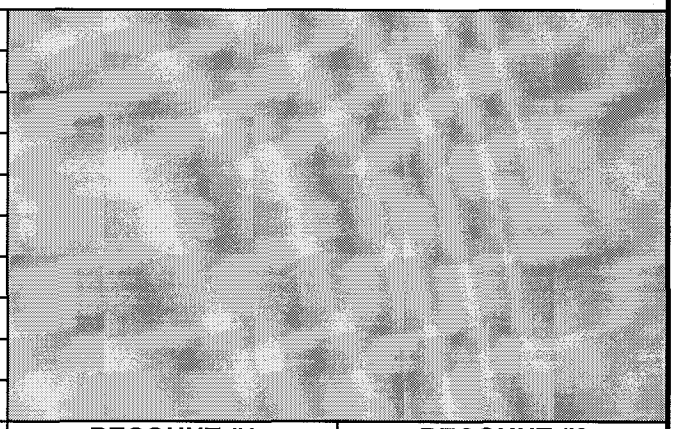	
Location	C Pond		
Sample Model / Serial #	Hi Vol. / RF 95381		
Sampler Calibration Due Date	3/3/2003		
Date / Time On	11/19/02 9:45		
Date / Time Off	11/19/02 10:15		
Total Run Time (min)	20		
Average Flow Rate (cfm)	70		
m3/min = (cfm x .0283)	1.981		
Volume V=m3/min x time	39.62		
COUNT ANALYSIS DATA:		RECOUNT #1	RECOUNT #2
Date	11/20/02	11/21/02	NA
Time	8:10	17:00	
Instrument Model / Serial #	SAC-4 833	SAC-4 952	
Instrument Calibration Due Date	2/28/03	1/31/03	
Total Count	22	3	
Count Duration (min)	10	10	
Gross Count Rate (cpm)	2.2	0.3	
Background Count Rate (cpm)	0	0	
Net Count Rate (cpm)	2.2	0.3	
Net Activity (C1) in dpm	6.6	0.9	NA

SAC-4 (dpm = cpm x 3) ELECTRA (dpm = cpm x 6) LUDLUM 12-1A (dpm = cpm x 2)

CF = 0.7 4-in filter
CF = 0.2 47 - mm punchout
CF = 0.5 planchet

$$DAC = \frac{C1}{(V)(CF)(DAC_{REF})}$$

Decay Time (t4-t3)	NA	NA	NA
DAC REF	4.8	4.8	
Correction Factor (CF)	0.2	0.2	
Calculated DAC:	0.17	0.02	
[redacted]			
			NA

Approved by: RS Supervision [redacted] 11/29/02

Print Name Signature Date

Standard Air Sample Analysis Form

High-Volume Air Samples

Bldg # Solar Purpose: C Pond baseline RWP#: 02-RISS-26

Isotope: Pu Inhalation Class: W Filter Media: 47 mm punchout

Sample ID #	1	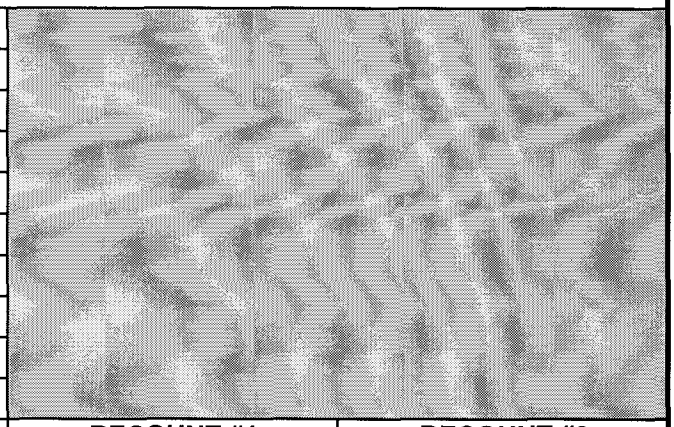	
Location	C Pond		
Sample Model / Serial #	Hi Vol. / RF 95381		
Sampler Calibration Due Date	3/3/2003		
Date / Time On	11/20/02 7:14		
Date / Time Off	11/20/02 7:26		
Total Run Time (min)	12		
Average Flow Rate (cfm)	65		
m3/min = (cfm x .0283)	1.8395		
Volume V=m3/min x time	22.074		
COUNT ANALYSIS DATA:		RECOUNT #1	RECOUNT #2
Date	11/20/02	11/21/02	NA
Time	15:02	17:15	
Instrument Model / Serial #	SAC-4 952	SAC-4 963	
Instrument Calibration Due Date	1/31/03	1/3/03	
Total Count	79	12	
Count Duration (min)	10	10	
Gross Count Rate (cpm)	7.9	1.2	
Background Count Rate (cpm)	0.1	0.4	
Net Count Rate (cpm)	7.8	0.8	
Net Activity (C1) in dpm	23.4	2.4	NA

SAC-4 (dpm = cpm x 3) ELECTRA (dpm = cpm x 6) LUDLUM 12-1A (dpm = cpm x 2)

CF = 0.7 4-in filter
CF = 0.2 47 - mm punchout
CF = 0.5 planchet

$$DAC = \frac{C1}{(V)(CF)(DAC_{REF})}$$

Decay Time (t4-t3)	NA	NA	NA
DAC REF	4.8	4.8	
Correction Factor (CF)	0.2	0.2	
Calculated DAC:	1.10	0.11	
[redacted]			
			NA

Approved by: RS Supervision [redacted] / [redacted] / [redacted] / 11290L

Print Name Signature Date

Standard Air Sample Analysis Form

High-Volume Air Samples

Bldg # Solar Purpose: C Pond Coverage, east berm RWP#: 02-RISS-26

Isotope: Pu Inhalation Class: W Filter Media: 47 mm punchout

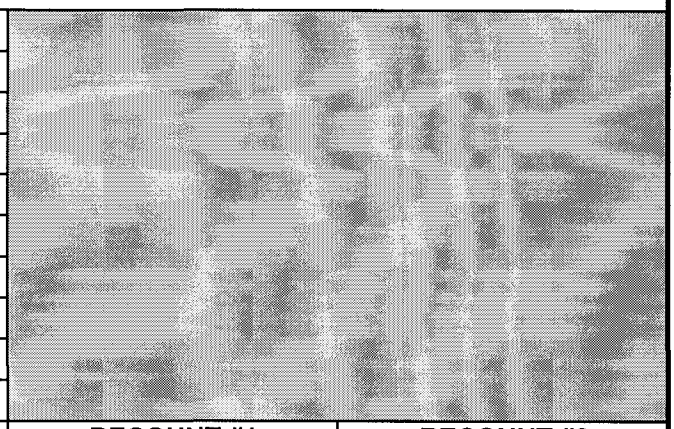

Sample ID #	1		
Location	C Pond		
Sample Model / Serial #	Hi Vol. / RF 95381		
Sampler Calibration Due Date	3/3/2003		
Date / Time On	11/20/02 8:30		
Date / Time Off	11/20/02 8:48		
Total Run Time (min)	18		
Average Flow Rate (cfm)	65		
m3/min = (cfm x .0283)	1.8395		
Volume V=m3/min x time	33.111		
COUNT ANALYSIS DATA:		RECOUNT #1	RECOUNT #2
Date	11/20/02	11/21/02	NA
Time	15:02	17:15	
Instrument Model / Serial #	SAC-4 963	SAC-4 833	
Instrument Calibration Due Date	1/3/03	2/28/03	
Total Count	81	21	
Count Duration (min)	10	10	
Gross Count Rate (cpm)	8.1	2.1	
Background Count Rate (cpm)	0.2	0.1	
Net Count Rate (cpm)	7.9	2	
Net Activity (C1) in dpm	23.7	6	NA

SAC-4 (dpm = cpm x 3) ELECTRA (dpm = cpm x 6) LUDLUM 12-1A (dpm = cpm x 2)

CF = 0.7 4-in filter
CF = 0.2 47 - mm punchout
CF = 0.5 planchet

$$DAC = \frac{C1}{(V)(CF)(DAC_{REF})}$$

Decay Time (t4-t3)	NA	NA	NA
DAC REF	4.8	4.8	
Correction Factor (CF)	0.2	0.2	
Calculated DAC:	0.75	0.19	
[redacted]			
			NA

Approved by:
RS Supervision [signature] / [signature] / [redacted] / 112902

Print Name Signature Date

360 Rev. 12/01

Standard Air Sample Analysis Form

High-Volume Air Samples

Bldg # Solar Purpose: C Pond Coverage, scraping RWP#: 02-RISS-26

Isotope: Pu Inhalation Class: W Filter Media: 47 mm punchout

Sample ID #	1	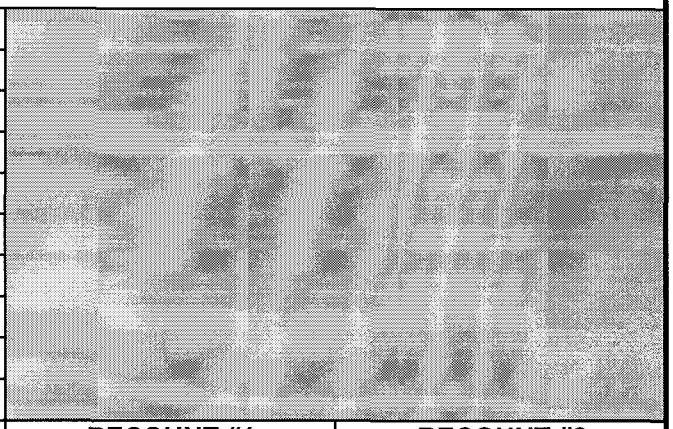	
Location	C Pond		
Sample Model / Serial #	Hi Vol. / RF 95381		
Sampler Calibration Due Date	3/3/2003		
Date / Time On	11/20/02 13:58		
Date / Time Off	11/20/02 14:18		
Total Run Time (min)	20		
Average Flow Rate (cfm)	70		
m3/min = (cfm x .0283)	1.981		
Volume V=m3/min x time	39.62		
COUNT ANALYSIS DATA:		RECOUNT #1	RECOUNT #2
Date	11/20/02	11/21/02	NA
Time	15:02	17:15	
Instrument Model / Serial #	SAC-4 883	SAC-4 959	
Instrument Calibration Due Date	2/28/03	1/18/03	
Total Count	1250	17	
Count Duration (min)	10	10	
Gross Count Rate (cpm)	125	1.7	
Background Count Rate (cpm)	0	0.2	
Net Count Rate (cpm)	125	1.5	
Net Activity (C1) in dpm	375	4.5	NA

SAC-4 (dpm = cpm x 3) ELECTRA (dpm = cpm x 6) LUDLUM 12-1A (dpm = cpm x 2)

CF = 0.7 4-in filter
CF = 0.2 47 - mm punchout
CF = 0.5 planchet

$$DAC = \frac{C1}{(V)(CF)(DAC_{REF})}$$

Decay Time (t4-t3)	NA	NA	NA
DAC REF	4.8	4.8	
Correction Factor (CF)	0.2	0.2	
Calculated DAC:	9.86	0.12	
	[redacted]		
			NA

Approved by: RS Supervision [redacted] / [redacted] / [redacted] 1/12/02

Print Name Signature Date

Standard Air Sample Analysis Form

High-Volume Air Samples

Bldg # Solar Purpose: C Pond Coverage RWP#: 02-RISS-26

Isotope: Pu Inhalation Class: W Filter Media: 47 mm punchout

Sample ID #	1		
Location	A Pond		
Sample Model / Serial #	Hi Vol. / RF 95381		
Sampler Calibration Due Date	3/3/2003		
Date / Time On	11/21/02 9:40		
Date / Time Off	11/21/02 10:00		
Total Run Time (min)	20		
Average Flow Rate (cfm)	70		
m3/min = (cfm x .0283)	1.981		
Volume V=m3/min x time	39.62		
COUNT ANALYSIS DATA:		RECOUNT #1	RECOUNT #2
Date	11/21/02	11/22/02	NA
Time	16:40	8:00	
Instrument Model / Serial #	SAC-4 833	SAC-4 963	
Instrument Calibration Due Date	2/28/03	1/3/03	
Total Count	110	32	
Count Duration (min)	10	10	
Gross Count Rate (cpm)	11	3.2	
Background Count Rate (cpm)	0.1	0	
Net Count Rate (cpm)	10.9	3.2	
Net Activity (C1) in dpm	32.7	9.6	NA

SAC-4 (dpm = cpm x 3) ELECTRA (dpm = cpm x 6) LUDLUM 12-1A (dpm = cpm x 2)

CF = 0.7 4-in filter
CF = 0.2 47 - mm punchout
CF = 0.5 planchet

$$DAC = \frac{C1}{(V)(CF)(DAC_{REF})}$$

Decay Time (t4-t3)	NA	NA	NA
DAC REF	4.8	4.8	
Correction Factor (CF)	0.2	0.2	
Calculated DAC:	0.86	0.25	
[redacted]			
[redacted]			
[redacted]			NA

Approved by: RS Supervision [redacted] [redacted] [redacted] 1/12/02

Print Name Signature Date

Standard Air Sample Analysis Form

High-Volume Air Samples

Bldg # Solar Purpose: C Pond Coverage RWP#: 02-RISS-26

Isotope: Pu Inhalation Class: W Filter Media: 47 mm punchout

Sample ID #	1	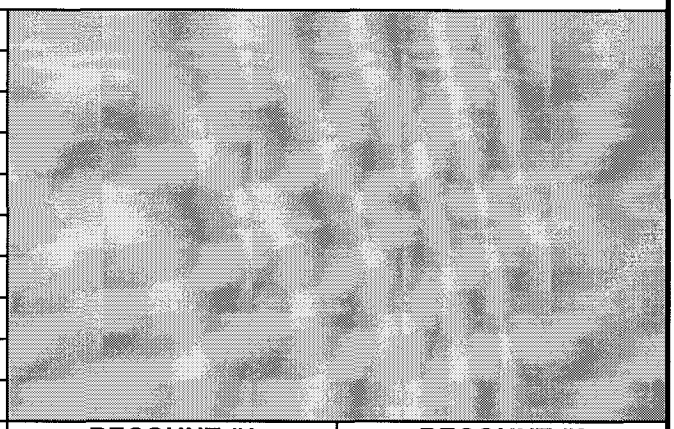	
Location	C Pond		
Sample Model / Serial #	Hi Vol. / RF 95381		
Sampler Calibration Due Date	3/3/2003		
Date / Time On	11/21/02 12:51		
Date / Time Off	11/21/02 13:11		
Total Run Time (min)	20		
Average Flow Rate (cfm)	70		
m3/min = (cfm x .0283)	1.981		
Volume V=m3/min x time	39.62		
COUNT ANALYSIS DATA:		RECOUNT #1	RECOUNT #2
Date	11/21/02	11/22/02	NA
Time	16:40	8:00	
Instrument Model / Serial #	SAC-4 959	SAC-4 952	
Instrument Calibration Due Date	1/18/03	1/31/03	
Total Count	82	15	
Count Duration (min)	10	10	
Gross Count Rate (cpm)	8.2	1.5	
Background Count Rate (cpm)	0.2	0.1	
Net Count Rate (cpm)	8	1.4	
Net Activity (C1) in dpm	24	4.2	NA

SAC-4 (dpm = cpm x 3) ELECTRA (dpm = cpm x 6) LUDLUM 12-1A (dpm = cpm x 2)

CF = 0.7 4-in filter
CF = 0.2 47 - mm punchout
CF = 0.5 planchet

$$DAC = \frac{C1}{(V)(CF)(DAC_{REF})}$$

Decay Time (t4-t3)	NA	NA	NA
DAC REF	4.8	4.8	
Correction Factor (CF)	0.2	0.2	
Calculated DAC:	0.63	0.11	
[redacted]			
			NA

Approved by: RS Supervision [redacted] / [redacted] / [redacted] / 11/27/02

Print Name Signature Date

Standard Air Sample Analysis Form

High-Volume Air Samples

Bldg # Solar Purpose: C Pond Coverage RWP#: 02-RISS-26

Isotope: Pu Inhalation Class: W Filter Media: 47 mm punchout

Sample ID #	1	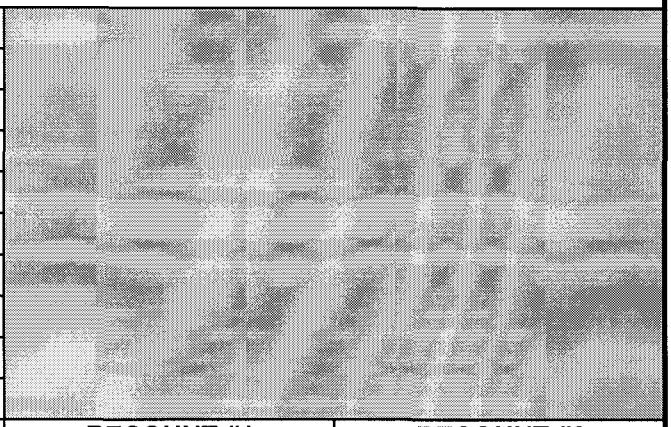	
Location	C Pond		
Sample Model / Serial #	Hi Vol. / RF 95381		
Sampler Calibration Due Date	3/3/2003		
Date / Time On	11/21/02 15:00		
Date / Time Off	11/21/02 15:20		
Total Run Time (min)	20		
Average Flow Rate (cfm)	65		
m3/min = (cfm x .0283)	1.8395		
Volume V=m3/min x time	36.79		
COUNT ANALYSIS DATA:		RECOUNT #1	RECOUNT #2
Date	11/21/02	11/22/02	NA
Time	16:40	8:00	
Instrument Model / Serial #	SAC-4 963	SAC-4 963	
Instrument Calibration Due Date	1/3/03	1/3/03	
Total Count	703	32	
Count Duration (min)	10	10	
Gross Count Rate (cpm)	70.3	3.2	
Background Count Rate (cpm)	0.4	0	
Net Count Rate (cpm)	69.9	3.2	
Net Activity (C1) in dpm	209.7	9.6	NA

SAC-4 (dpm = cpm x 3) ELECTRA (dpm = cpm x 6) LUDLUM 12-1A (dpm = cpm x 2)

CF = 0.7 4-in filter
CF = 0.2 47 - mm punchout
CF = 0.5 planchet

$$DAC = \frac{C1}{(V)(CF)(DAC_{REF})}$$

Decay Time (t4-t3)	NA	NA	NA
DAC REF	4.8	4.8	
Correction Factor (CF)	0.2	0.2	
Calculated DAC:	5.94	0.27	
	[redacted]		
			NA

Approved by: RS Supervision [redacted] / [redacted] / [redacted] / 112502

Print Name Signature Date

Standard Air Sample Analysis Form

High-Volume Air Samples

Bldg # S. P. Purpose: Stablizing / removal of sediment from C pond RWP#: 02-RISS-026

Isotope: Pu Inhalation Class: W Filter Media: 47 - mm punchout

Sample ID #	NA		
Location	North berm of C pond		
Sample Model / Serial #	Hi vol RF-95381		
Sampler Calibration Due Date	3/3		
Date / Time On	11/22/02 12:35		
Date / Time Off	11/22/02 12:58		
Total Run Time (min)	23		
Average Flow Rate (cfm)	65		
m3/min = (cfm x .0283)	1.84		
Volume V=m3/min x time	42.31		
COUNT ANALYSIS DATA:		RECOUNT #1	RECOUNT #2
Date	11/22/02	11/25/02	NA
Time	17:10	12:14	
Instrument Model / Serial #	SAC-4 952	SAC-4 959	
Instrument Calibration Due Date	1/31/02	1/18/03	
Total Count	36	9	
Count Duration (min)	10	10	
Gross Count Rate (cpm)	3.6	0.9	
Background Count Rate (cpm)	0.1	0.2	
Net Count Rate (cpm)	3.5	0.7	
Net Activity (C1) in dpm	10.5	2.1	NA

SAC-4 (dpm = cpm x 3) ELECTRA (dpm = cpm x 6) LUDLUM 12-1A (dpm = cpm x 2)

CF = 0.7 4-in filter
CF = 0.2 47 - mm punchout
CF = 0.5 planchet

$$DAC = \frac{C1}{(V)(CF)(DAC_{REF})}$$

Decay Time (t4-t3)	NA	NA	NA
DAC_{REF}	4.8	4.8	
Correction Factor (CF)	0.2	0.2	
Calculated DAC:	0.26	0.05	
[redacted]			
			NA

Approved by: RS Supervision [redacted] / [redacted] / [redacted] 1/12/02

Print Name Signature Date

Standard Air Sample Analysis Form

High-Volume Air Samples

Bldg # Solar Purpose: sludge removal from C pond RWP#: 02-RISS-26

Isotope: Pu Inhalation Class: W Filter Media: 47 mm punchout

Sample ID #	1		
Location	C Pond		
Sample Model / Serial #	Hi Vol. / RF 95381		
Sampler Calibration Due Date	3/3/2003		
Date / Time On	11/23/02 9:35		
Date / Time Off	11/23/02 9:55		
Total Run Time (min)	20		
Average Flow Rate (cfm)	70		
m3/min = (cfm x .0283)	1.981		
Volume V=m3/min x time	39.62		
COUNT ANALYSIS DATA:		RECOUNT #1	RECOUNT #2
Date	11/23/02	11/25/02	NA
Time	17:00	12:15	
Instrument Model / Serial #	SAC-4 959	SAC-4 833	
Instrument Calibration Due Date	1/18/03	2/28/03	
Total Count	231	16	
Count Duration (min)	10	10	
Gross Count Rate (cpm)	23.1	1.6	
Background Count Rate (cpm)	0.1	0	
Net Count Rate (cpm)	23	1.6	
Net Activity (C1) in dpm	69	4.8	NA

SAC-4 (dpm = cpm x 3) ELECTRA (dpm = cpm x 6) LUDLUM 12-1A (dpm = cpm x 2)

CF = 0.7 4-in filter
CF = 0.2 47 - mm punchout
CF = 0.5 planchet

$$DAC = \frac{C1}{(V)(CF)(DAC_{REF})}$$

Decay Time (t4-t3)	NA	NA	NA
DAC REF	4.8	4.8	
Correction Factor (CF)	0.2	0.2	
Calculated DAC:	1.81	0.13	
[redacted]			
			NA

Approved by: RS Supervision [redacted] 12-11-02

Print Name Signature Date

3686

Standard Air Sample Analysis Form

High-Volume Air Samples

Bldg # Solar Purpose: equipment cleanup RWP#: 02-RISS-26

Isotope: Pu Inhalation Class: W Filter Media: 47 mm punchout

Sample ID #	1	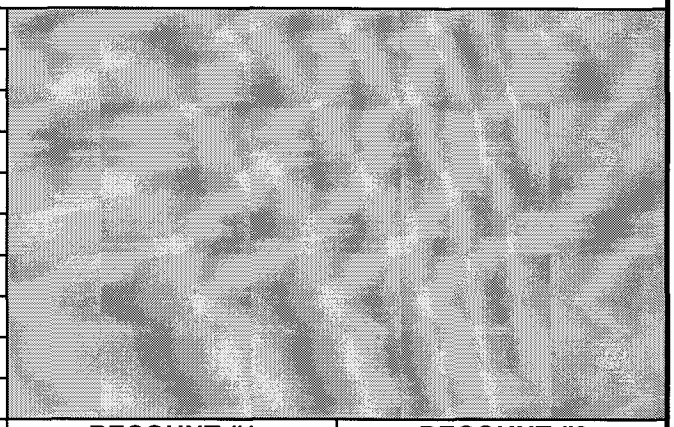	
Location	C Pond		
Sample Model / Serial #	Hi Vol. / RF 95381		
Sampler Calibration Due Date	3/3/2003		
Date / Time On	11/25/02 9:10		
Date / Time Off	11/25/02 9:25		
Total Run Time (min)	15		
Average Flow Rate (cfm)	65		
m3/min = (cfm x .0283)	1.8395		
Volume V=m3/min x time	27.5925		
COUNT ANALYSIS DATA:		RECOUNT #1	RECOUNT #2
Date	11/25/02	12/3/02	NA
Time	12:15	17:15	
Instrument Model / Serial #	SAC-4 963	SAC-4 833	
Instrument Calibration Due Date	1/31/03	2/28/03	
Total Count	391	1	
Count Duration (min)	10	10	
Gross Count Rate (cpm)	39.1	0.1	
Background Count Rate (cpm)	0.1	0.1	
Net Count Rate (cpm)	39	0	
Net Activity (C1) in dpm	117	0	NA

SAC-4 (dpm = cpm x 3) ELECTRA (dpm = cpm x 6) LUDLUM 12-1A (dpm = cpm x 2)

CF = 0.7 4-in filter
CF = 0.2 47 - mm punchout
CF = 0.5 planchet

$$DAC = \frac{C1}{(V)(CF)(DAC_{REF})}$$

Decay Time (t4-t3)	NA	NA	NA
DAC_{REF}	4.8	4.8	
Correction Factor (CF)	0.2	0.2	
Calculated DAC:	4.42	0.00	
[redacted]			
			NA

Approved by: RS Supervision [redacted] 11/26/02

Print Name Signature Date

Standard Air Sample Analysis Form

High-Volume Air Samples

Bldg # Solar Purpose: C Pond peeling RWP#: 02-RISS-26

Isotope: Pu Inhalation Class: W Filter Media: 47 mm punchout

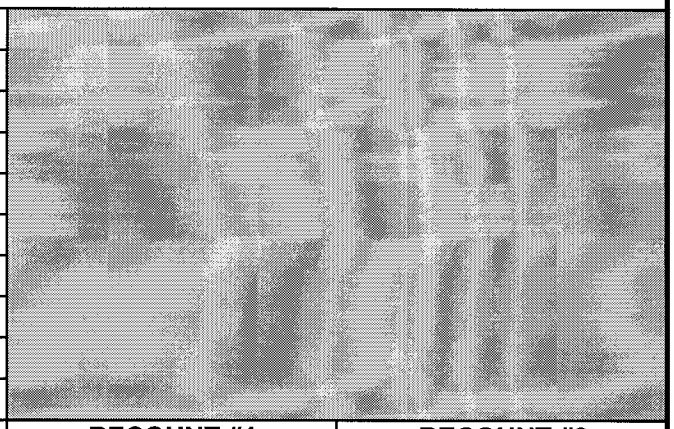

Sample ID #	1		
Location	C Pond		
Sample Model / Serial #	Hi Vol. / RF 95381		
Sampler Calibration Due Date	3/3/2003		
Date / Time On	11/26/02 9:15		
Date / Time Off	11/26/02 9:35		
Total Run Time (min)	20		
Average Flow Rate (cfm)	70		
m3/min = (cfm x .0283)	1.981		
Volume V=m3/min x time	39.62		
COUNT ANALYSIS DATA:		RECOUNT #1	RECOUNT #2
Date	11/20/02	12/3/02	NA
Time	15:02	17:15	
Instrument Model / Serial #	SAC-4 959	SAC-4 959	
Instrument Calibration Due Date	1/18/03	1/18/03	
Total Count	664	2	
Count Duration (min)	10	10	
Gross Count Rate (cpm)	66.4	0.3	
Background Count Rate (cpm)	0.1	0.4	
Net Count Rate (cpm)	66.3	0	
Net Activity (C1) in dpm	198.9	0	NA

SAC-4 (dpm = cpm x 3) ELECTRA (dpm = cpm x 6) LUDLUM 12-1A (dpm = cpm x 2)

CF = 0.7 4-in filter
CF = 0.2 47 - mm punchout
CF = 0.5 planchet

$$DAC = \frac{C1}{(V)(CF)(DAC_{REF})}$$

Decay Time (t4-t3)	NA	NA	NA
DAC REF	4.8	4.8	
Correction Factor (CF)	0.2	0.2	
Calculated DAC:	5.23	0.00	
[redacted]			
			NA

Approved by:
RS Supervision [signature] / [signature] / [redacted] / 12-11-02

Print Name Signature Date

368 Rev. 12/01

Standard Air Sample Analysis Form

High-Volume Air Samples

Bldg # Solar Purpose: C Pond pushing in berms RWP#: 02-RISS-26

Isotope: Pu Inhalation Class: W Filter Media: 47 mm punchout

Sample ID #	1	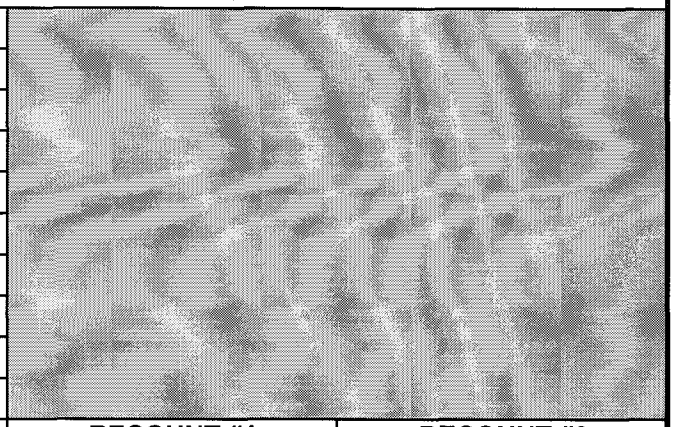	
Location	C Pond		
Sample Model / Serial #	Hi Vol. / RF 95381		
Sampler Calibration Due Date	3/3/2003		
Date / Time On	12/2/02 7:26		
Date / Time Off	12/2/02 7:44		
Total Run Time (min)	18		
Average Flow Rate (cfm)	70		
m3/min = (cfm x .0283)	1.981		
Volume V=m3/min x time	35.658		
COUNT ANALYSIS DATA:		RECOUNT #1	RECOUNT #2
Date	12/2/02	12/3/02	NA
Time	16:15	17:15	
Instrument Model / Serial #	SAC-4 952	SAC-4 959	
Instrument Calibration Due Date	1/31/03	1/18/03	
Total Count	40	15	
Count Duration (min)	10	10	
Gross Count Rate (cpm)	4	1.5	
Background Count Rate (cpm)	0.4	0.2	
Net Count Rate (cpm)	3.6	1.3	V
Net Activity (C1) in dpm	10.8	3.9	NA

SAC-4 (dpm = cpm x 3) ELECTRA (dpm = cpm x 6) LUDLUM 12-1A (dpm = cpm x 2)

CF = 0.7 4-in filter
CF = 0.2 47 - mm punchout
CF = 0.5 planchet

$$DAC = \frac{C1}{(V)(CF)(DAC_{REF})}$$

Decay Time (t4-t3)	NA	NA	NA
DAC REF	4.8	4.8	
Correction Factor (CF)	0.2	0.2	
Calculated DAC:	0.32	0.11	
[redacted]			
[redacted]			V
[redacted]			NA

Approved by: RS Supervision [redacted] 12-11-02

Print Name Signature Date

PORTABLE SCALER CONTAMINATION INSTRUMENT PERFORMANCE TEST LOG RSFORMS-02.01-04

INST. TYPE/SERIAL #: *NE ELECTRA / # 1429* CAL. DUE DATE: 5/11/03 INSTRUMENT EFFICIENCY: Alpha 20.9 % Beta 129.0 %

PROBE S/N: # 1276 BLDG. T130I

This form is used to record parameters noted during daily performance checks on NE Electra, Bicron Frisk-Tech, Portable instruments with gas proportional detector. Instruments that require additional repair or service are returned to Instrumentation Repair Facility.

TIME/ DATE	RCT NAME/EMP #	IN CAL Yes No	BATT SAT Yes No	COUNT TYPE	BKG (cpm)	INSTRUMENT READING (Net cpm)	FLUSH/RE-CHARGE (N/A if not gas prop. det.) (Initials)	% ERROR ± 20% IN TOL (Initials)	RCT SIGNATURE
0630 12/11/02	[redacted]	Y	Y	Alpha	2	2562	N/A	N/A	[redacted]
				Beta	352	4201			
0615 12/12/02		Y	Y	Alpha	2	2858			
				Beta	355	3860			
0620 12/13/02		Y	Y	Alpha	3	2644			
				Beta	400	4086			
1445 12-16-02		Y	Y	Alpha	1	2753			
				Beta	422	4087			
0605 12-17-02		Y	Y	Alpha	4	2770			
				Beta	391	3566			
0630 12-18-02		Y	Y	Alpha	1	2802			
				Beta	367	3716			
0630 12-19-02		Y	Y	Alpha	0	2829			
				Beta	382	3865			
0640 12-30-02		Y	Y	Alpha	1	2832			
				Beta	388	4067			
0615 12-31-02		Y	Y	Alpha	1	2774			
				Beta	337	3972			
NA	NA	NA	NA	Alpha	NA	NA		NA	NA
				Beta					
				Alpha					
				Beta					
				Alpha					
				Beta					
				Alpha					
NA	NA	NA	NA	Beta	NA	NA	N/A	NA	NA

370

P[redacted]ABLE SCALER CONTAMINATION INSTRUMENT [redacted]RFORMANCE TEST LOG RSFORMS-02.01-04

SOURCE ISOTOPE (Alpha): *Pu 239* (CSL)/(S/N)/(Registry No.): 603577 Certification/Decay Chart Date: 12/31/02
(Circle One) (Circle One)

Source (dpm): 15023 Range (cpm) ± 20%: 1512 - 3768

SOURCE ISOTOPE (Beta): *Sr 90* (CSL)/(S/N)/(Registry No.): 604432 Certification/Decay Chart Date: 12/31/02
(Circle One) (Circle One)

Source (dpm): 14251 Range (cpm) ± 20%: 3306 - 4959

Approved by:
RS Supervision: S Coordinator [redacted] 12/31/02
Name (print) Signature Date

$$\%Error = \frac{(Net\ cpm \div eff) - Source\ dpm}{Source\ dpm} \times (100)$$

Where Net cpm = Source cpm - Background cpm

GUIDANCE:

- The appropriate instrument data and building location is recorded on RSFORMS-02.01-04.
- Obtain an appropriate certified source or decay chart source for the instrument being tested.
- A general inspection is performed on the instrument for the following:
  - * Physical condition of the detector, cables, and instrument
  - * Instrument battery/power supply check is satisfactory
  - * Instrument audio check is satisfactory, as applicable
  - * Instrument light leak check is satisfactory, as applicable
  - * Instrument background response check is within tolerances of expected values (typically 1 minute count)
  - * Instrument corrected source count reading falls within an acceptable range (± 20% of source value typically using a 1 minute count)
- Performance test data is recorded (as applicable) to each portable contamination survey instrument with signature upon completion.

P[redacted]TABLE SCALER CONTAMINATION INSTRUMENT [redacted]RFORMANCE TEST LOG RSFORMS-02.01-04[redacted]

INST. TYPE/SERIAL #: *NE ELECTRA / # 1665* CAL. DUE DATE: 3-3-03 INSTRUMENT EFFICIENCY: Alpha 21.8 % Beta 1309 %

PROBE S/N: # 1657 BLDG. T130I

This form is used to record parameters noted during daily performance checks on NE Electra, Bicron Frisk-Tech, Portable instruments with gas proportional detector. Instruments that require additional repair or service are returned to Instrumentation Repair Facility.

TIME/ DATE	RCT NAME/EMP #	IN CAL Yes No	BATT SAT Yes No	COUNT TYPE	BKG (cpm)	INSTRUMENT READING (Net cpm)	FLUSH/RE-CHARGE (N/A if not gas prop. det.) (Initials)	% ERROR ± 20% IN TOL (Initials)	RCT SIGNATURE
0605 12.9.02	[redacted]	Y	Y	Alpha	1	2630	N/A	YM.	[redacted]
				Beta	373	4773			
0610 12/11/02		y	Y	Alpha	4	2786		DBJ	
				Beta	381	4333			
0615 12/12/02		Y	Y	Alpha	1	3045		DBJ	
				Beta	368	3888			
0620 12/13/02		Y	Y	Alpha	1	2733		YM.	
				Beta	357	4233			
0615 12.16.02		Y	Y	Alpha	0	2913		YM.	
				Beta	358	4401			
0600 12.17.02		Y	Y	Alpha	3	2970		YM.	
				Beta	397	3797			
0630 12.18.02		Y	Y	Alpha	3	3020		YM.	
				Beta	384	3128			
0630 12.19.02		Y	Y	Alpha	1	2760		YM.	
				Beta	376	4332			
0640 12.30.02		Y	Y	Alpha	1	2993		YM.	
				Beta	381	3718			
0615 12.31.03		Y	Y	Alpha	6	2897		YM	
				Beta	456	4053 ~~3249~~ YM*			
NA		NA	NA	Alpha	NA	NA		NA	
				Beta					
				Alpha					
				Beta					
				Alpha					
				Beta					
NA	NA	NA	NA	Alpha			N/A	NA	NA
				Beta	NA	NA			

* Guidance for use of this form is located on the back of the form

372

* Geometry error.

PORTABLE SCALER CONTAMINATION INSTRUMENT PERFORMANCE TEST LOG RSFORMS-02.01-04

SOURCE ISOTOPE (Alpha): *Pu 239* (CSL)/(S/N)/(Registry No.): 603577 Certification/Decay Chart Date: 12-31-02
(Circle One) (Circle One)

Source (dpm): 15023 Range (cpm) ± 20%: ~~2623~~ 2621 – 3930

SOURCE ISOTOPE (Beta): *Sr 90* (CSL)/(S/N)/(Registry No.): 604482 Certification/Decay Chart Date: 12-31-02
(Circle One) (Circle One)

Source (dpm): 14257 Range (cpm) ± 20%: 3522 – 5283

Approved by:
RS Supervision: [illegible] / [illegible] / [redacted] / 123102
Name (print) Signature E Date

$$\%Error = \frac{(Net\ cpm \div eff) - Source\ dpm}{Source\ dpm} \times (100)$$

Where Net cpm = Source cpm - Background cpm

GUIDANCE:

- The appropriate instrument data and building location is recorded on RSFORMS-02.01-04.
- Obtain an appropriate certified source or decay chart source for the instrument being tested.
- A general inspection is performed on the instrument for the following:
  - * Physical condition of the detector, cables, and instrument
  - * Instrument battery/power supply check is satisfactory
  - * Instrument audio check is satisfactory, as applicable
  - * Instrument light leak check is satisfactory, as applicable
  - * Instrument background response check is within tolerances of expected values (typically 1 minute count)
  - * Instrument corrected source count reading falls within an acceptable range (± 20% of source value typically using a 1 minute count)
- Performance test data is recorded (as applicable) to each portable contamination survey instrument with signature upon completion.

PO[redacted]ABLE SCALER CONTAMINATION INSTRUMENT P[redacted]FORMANCE TEST LOG RSFORMS-02.01-04[redacted]

INST. TYPE/SERIAL #: *NE ELECTRA / # 1589* CAL. DUE DATE: 4.30.03 INSTRUMENT EFFICIENCY: Alpha 21.5% Beta 131.5%

PROBE S/N: # 1456 BLDG. T130I

This form is used to record parameters noted during daily performance checks on NE Electra, Bicron Frisk-Tech, Portable instruments with gas proportional detector. Instruments that require additional repair or service are returned to Instrumentation Repair Facility.

TIME/ DATE	RCT NAME/EMP #	IN CAL Yes No	BATT SAT Yes No	COUNT TYPE	BKG (cpm)	INSTRUMENT READING (Net cpm)	FLUSH/RE-CHARGE (N/A if not gas prop. det.) (Initials)	% ERROR ± 20% IN TOL (Initials)	RCT SIGNATURE
12/2/02 0630	[redacted]	Y	Y	Alpha	1	2944	N/A	YM.	[redacted]
				Beta	353	4189			
0615 12/3/02		Y	Y	Alpha	0	2961		BBJ	
				Beta	364	4407			
0620 12.4.02		Y	Y	Alpha	1	2933		YM	
				Beta	373	4426			
0615 12/5/02		Y	Y	Alpha	2	2823		BBJ	
				Beta	352	4029			
0610 12/6/02		Y	Y	Alpha	4	2823		BBJ	
				Beta	345	4532			
0615 12/8/02		Y	Y	Alpha	4	2749		BBJ	
				Beta	333	4176			
0605 12/9/02		Y	Y	Alpha	1	2743		YM.	
				Beta	403	4619			
0610 12/10/02		Y	Y	Alpha	3	2765		BBJ	
				Beta	384	4563			
0615 12/11/02		Y	Y	Alpha	1	2792		BBJ	
				Beta	385	4479			
0615 12/12/02		Y	Y	Alpha	1	2972		BBJ	
				Beta	360	4203			
0620 12/13/02		Y	Y	Alpha	2	2927		YM.	
				Beta	397	4342			
0615 12.16.02		Y	Y	Alpha	4	274		YM.	
				Beta	442	4315			
N		N	N	Alpha	NA	NA	↓	N	
				Beta	↓	↓			
A		A	A	Alpha	↓	↓	N/A	A	A
				Beta	NA	NA			

374 Rev 04/01

* Guidance for use of this form is located on the back of the form

1584

P[redacted]TABLE SCALER CONTAMINATION INSTRUMENT[redacted]ERFORMANCE TEST LOG RSFORMS-02.01-04

SOURCE ISOTOPE (Alpha): *Pu 239* (CSL)/(S/N)/(Registry No.): 603577 Certification/Decay Chart Date: 12/31/02
(Circle One) (Circle One)

Source (dpm): 15023 Range (cpm) ± 20%: 2584 – 3876

SOURCE ISOTOPE (Beta): *Sr 90* (CSL)/(S/N)/(Registry No.): 604432 Certification/Decay Chart Date: 12/31/02
(Circle One) (Circle One)

Source (dpm): 14251 Range (cpm) ± 20%: 3591 – 5387

Approved by:
RS Supervision

Name (print) Signature [redacted] Date 12-16-02

$$\%Error = \frac{(Net\ cpm \div eff) - Source\ dpm}{Source\ dpm} \times (100)$$

Where Net cpm = Source cpm - Background cpm

GUIDANCE:

- The appropriate instrument data and building location is recorded on RSFORMS-02.01-04.
- Obtain an appropriate certified source or decay chart source for the instrument being tested.
- A general inspection is performed on the instrument for the following:
  - * Physical condition of the detector, cables, and instrument
  - * Instrument battery/power supply check is satisfactory
  - * Instrument audio check is satisfactory, as applicable
  - * Instrument light leak check is satisfactory, as applicable
  - * Instrument background response check is within tolerances of expected values (typically 1 minute count)
  - * Instrument corrected source count reading falls within an acceptable range (± 20% of source value typically using a 1 minute count)
- Performance test data is recorded (as applicable) to each portable contamination survey instrument with signature upon completion.

P[redacted]TABLE SCALER CONTAMINATION INSTRUMENT [redacted]RFORMANCE TEST LOG RSFORMS-02.01-04[redacted]

INST. TYPE/SERIAL #: *NE ELECTRA / # 3110* CAL. DUE DATE: 6/4/03 INSTRUMENT EFFICIENCY: Alpha 21.2 % Beta 129.9 %

PROBE S/N: # 1879 BLDG. T130I

This form is used to record parameters noted during daily performance checks on NE Electra, Bicron Frisk-Tech, Portable instruments with gas proportional detector. *Instruments that require additional repair or service are returned to Instrumentation Repair Facility.*

TIME/ DATE	RCT NAME/EMP #	IN CAL Yes No	BATT SAT Yes No	COUNT TYPE	BKG (cpm)	INSTRUMENT READING (Net cpm)	FLUSH/RE-CHARGE (N/A if not gas prop. det.) (Initials)	% ERROR ±20% IN TOL (Initials)	RCT SIGNATURE
1615 12/9/02	[redacted]	Y	Y	Alpha	2	2901	N/A	[redacted]	[redacted]
				Beta	316	3424			
0610 12/10/02		Y	Y	Alpha	1	2707			
				Beta	365	4365			
N/A		N/A	N/A	Alpha	N/A	N/A		N/A	
				Beta					
				Alpha					
				Beta					
				Alpha					
				Beta					
				Alpha					
				Beta					
				Alpha					
				Beta					
				Alpha					
				Beta					
				Alpha					
				Beta					
				Alpha					
				Beta					
				Alpha					
				Beta					
				Alpha					
				Beta					
				Alpha					
				Beta					
				Alpha					
				Beta					
				Alpha					
				Beta					
N/A	N/A	N/A	N/A	Alpha					
				Beta	N/A	N/A	N/A	N/A	N/A

376

3110

PORTABLE SCALER CONTAMINATION INSTRUMENT PERFORMANCE TEST LOG RSFORMS-02.01-04

SOURCE ISOTOPE (Alpha): *Pu 239* (CSL)/(S/N)/(Registry No.): 603577 Certification/Decay Chart Date: 12/31/02
(Circle One) (Circle One)

Source (dpm): 15023 Range (cpm) ± 20%: 2548 - 3822

SOURCE ISOTOPE (Beta): *Sr 90* (CSL)/(S/N)/(Registry No.): 604432 Certification/Decay Chart Date: 12/31/02
(Circle One) (Circle One)

Source (dpm): 14251 Range (cpm) ± 20%: 3409 - 5113

Approved by:
RS Supervision: [signature] / [signature] / [redacted] 12-16-02
Name (print) Signature Date

$$\%Error = \frac{(Net\ cpm \div eff) - Source\ dpm}{Source\ dpm} \times (100)$$

Where Net cpm = Source cpm - Background cpm

GUIDANCE:

- The appropriate instrument data and building location is recorded on RSFORMS-02.01-04.
- Obtain an appropriate certified source or decay chart source for the instrument being tested.
- A general inspection is performed on the instrument for the following:
  - * Physical condition of the detector, cables, and instrument
  - * Instrument battery/power supply check is satisfactory
  - * Instrument audio check is satisfactory, as applicable
  - * Instrument light leak check is satisfactory, as applicable
  - * Instrument background response check is within tolerances of expected values (typically 1 minute count)
  - * Instrument corrected source count reading falls within an acceptable range (± 20% of source value typically using a 1 minute count)
- Performance test data is recorded (as applicable) to each portable contamination survey instrument with signature upon completion.

PORTABLE SCALER CONTAMINATION INSTRUMENT PERFORMANCE TEST LOG RSFORMS-02.01-04

INST. TYPE/SERIAL #: *NE ELECTRA / # 313* CAL. DUE DATE: 3/24/03 INSTRUMENT EFFICIENCY: Alpha 21.9 % Beta / 30.3 %

PROBE S/N: # 1882 BLDG. T130I

This form is used to record parameters noted during daily performance checks on NE Electra, Bicron Frisk-Tech, Portable instruments with gas proportional detector. Instruments that require additional repair or service are returned to Instrumentation Repair Facility.

TIME/ DATE	RCT NAME/EMP #	IN CAL Yes No	BATT SAT Yes No	COUNT TYPE	BKG (cpm)	INSTRUMENT READING (Net cpm)	FLUSH/RE-CHARGE (N/A if not gas prop. det.) (Initials)	% ERROR ± 20% IN TOL (Initials)	RCT SIGNATURE
12/2/02	[redacted]								[redacted]
~~12/12/02~~ 0630		Y	Y	Alpha	3	2856	N/A	YM.	
				Beta	333	4345			
12/3/02 0015		Y	Y	Alpha	1	3034		MJ	
				Beta	365	4286			
12.4.02 0020		Y	Y	Alpha	2	2980		YM	
				Beta	364	4258			
0610 12/5/02		Y	Y	Alpha	4	2946		MJ	
				Beta	349	4290			
0610 12/6/02		Y	Y	Alpha	1	2992		DJ	
				Beta	361	4005			
0615 12/8/02		Y	Y	Alpha	1	3004		MJ	
				Beta	364	3927			
NA		NA	NA	Alpha	NA	NA		NA	
				Beta					
				Alpha					
				Beta					
				Alpha					
				Beta					
				Alpha					
				Beta					
				Alpha					
				Beta					
				Alpha					
				Beta					
NA	NA	NA	NA	Alpha					
				Beta	NA	NA	N/A	NA	NA

Rev 04/01

Page 1 * Guidance for use of this form is located on the back of the form

3/8

313

F[redacted]TABLE SCALER CONTAMINATION INSTRUMENT[redacted]ERFORMANCE TEST LOG RSFORMS-02.01-04[redacted]

SOURCE ISOTOPE (Alpha): *Pu 239* (CSL)/(S/N)/(Registry No.): 603577 Certification/Decay Chart Date: 12/31/02
(Circle One) (Circle One)

Source (dpm): 15023 Range (cpm) ± 20%: 2632 – 3948

SOURCE ISOTOPE (Beta): *Sr 90* (CSL)/(S/N)/(Registry No.): 604432 Certification/Decay Chart Date: 12/31/02
(Circle One) (Circle One)

Source (dpm): 14251 Range (cpm) ± 20%: 3454 – 5102

Approved by:
RS Supervision: [redacted] [redacted] 12-9-02
Name (print) Signature Date

$$\%Error = \frac{(Net\ cpm \div eff) - Source\ dpm}{Source\ dpm} \times (100)$$

Where Net cpm = Source cpm - Background cpm

GUIDANCE:

- The appropriate instrument data and building location is recorded on RSFORMS-02.01-04.
- Obtain an appropriate certified source or decay chart source for the instrument being tested.
- A general inspection is performed on the instrument for the following:
  - * Physical condition of the detector, cables, and instrument
  - * Instrument battery/power supply check is satisfactory
  - * Instrument audio check is satisfactory, as applicable
  - * Instrument light leak check is satisfactory, as applicable
  - * Instrument background response check is within tolerances of expected values (typically 1 minute count)
  - * Instrument corrected source count reading falls within an acceptable range (± 20% of source value typically using a 1 minute count)
- Performance test data is recorded (as applicable) to each portable contamination survey instrument with signature upon completion.

[redacted]RTABLE SCALER CONTAMINATION INSTRUME[redacted]ERFORMANCE TEST LOG RSFORMS-02.01

INST. TYPE/SERIAL #: *NE ELECTRA / # 1145* CAL. DUE DATE: 5/7/03 INSTRUMENT EFFICIENCY: Alpha 22.3 % Beta 133.6 %

PROBE S/N: # 1312 BLDG. T130I

This form is used to record parameters noted during daily performance checks on NE Electra, Bicron Frisk-Tech, Portable instruments with gas proportional detector. Instruments that require additional repair or service are returned to Instrumentation Repair Facility.

TIME/ DATE	RCT NAME/EMP #	IN CAL Yes No	BATT SAT Yes No	COUNT TYPE	BKG (cpm)	INSTRUMENT READING (Net cpm)	FLUSH/RE-CHARGE (N/A if not gas prop. det.) (Initials)	% ERROR ± 20% IN TOL (Initials)	RCT SIGNATURE
1255 11/12/02	[redacted]	Y	Y	Alpha	2	2424	N/A	[redacted]	[redacted]
				Beta	364	4920			
0615 11/13/02		Y	Y	Alpha	1	2974			
				Beta	378	4709			
0615 11/14/02		Y	Y	Alpha	3	3106			
				Beta	395	4791			
0600 11/15/02		Y	Y	Alpha	1	3021			
				Beta	371	4385			
0615 11/16/02		Y	Y	Alpha	4	3002			
				Beta	372	4762			
0615 11/18/02		Y	Y	Alpha	4	2845			
				Beta	385	5080			
0615 11/19/02		Y	Y	Alpha	2	2804			
				Beta	383	4979			
0620 11/20/02		Y	Y	Alpha	3	2838			
				Beta	413	5104			
0615 11/21/02		Y	Y	Alpha	3	2984			
				Beta	392	5224			
0620 11/22/02		Y	Y	Alpha	1	2961			
				Beta	388	5045			
0630 11/23/02		Y	Y	Alpha	2	3034			
				Beta	360	4865			
0630 11/25/02		Y	Y	Alpha	2	2990			
				Beta	414	4720			
0610 11/26/02		Y	Y	Alpha	2	2888			
				Beta	395	4984			
N/A		N/A	N/A	Alpha	N/A	N/A	N/A	N/A	
				Beta	N/A	N/A			

#1445

PORTABLE SCALER CONTAMINATION INSTRUMENT PERFORMANCE TEST LOG RSFORMS-02.01-04

SOURCE ISOTOPE (Alpha): *Pu 239* (CSL)/(S/N)/(Registry No.): 603577 Certification/Decay Chart Date: 11/30/02
(Circle One) (Circle One)

Source (dpm): 15023 Range (cpm) ± 20%: 2680 - 4020

SOURCE ISOTOPE (Beta): *Sr 90* (CSL)/(S/N)/(Registry No.): 604432 Certification/Decay Chart Date: 11/30/02
(Circle One) (Circle One)

Source (dpm): 14290 Range (cpm) ± 20%: 3838 - 5758

Approved by:
RS Supervision: [redacted] / [redacted] / [redacted] / 11-28-02
Name (print) Signature Date

$$\%Error = \frac{(Net\ cpm \div eff) - Source\ dpm}{Source\ dpm} \times (100)$$

Where Net cpm = Source cpm - Background cpm

GUIDANCE:

- The appropriate instrument data and building location is recorded on RSFORMS-02.01-04.
- Obtain an appropriate certified source or decay chart source for the instrument being tested.
- A general inspection is performed on the instrument for the following:
  - * Physical condition of the detector, cables, and instrument
  - * Instrument battery/power supply check is satisfactory
  - * Instrument audio check is satisfactory, as applicable
  - * Instrument light leak check is satisfactory, as applicable
  - * Instrument background response check is within tolerances of expected values (typically 1 minute count)
  - * Instrument corrected source count reading falls within an acceptable range (± 20% of source value typically using a 1 minute count)
- Performance test data is recorded (as applicable) to each portable contamination survey instrument with signature upon completion.

[redacted]RTABLE SCALER CONTAMINATION INSTRUME[redacted]ERFORMANCE TEST LOG RSFORMS-02.01

INST. TYPE/SERIAL #: *NE ELECTRA / #* 3113 CAL. DUE DATE: [illegible] INSTRUMENT EFFICIENCY: Alpha [illegible] % Beta 13[illegible] %

PROBE S/N: # [illegible] BLDG. T130I

This form is used to record parameters noted during daily performance checks on NE Electra, Bicron Frisk-Tech, Portable instruments with gas proportional detector. Instruments that require additional repair or service are returned to Instrumentation Repair Facility.

TIME/ DATE	RCT NAME/EMP #	IN CAL Yes No	BATT SAT Yes No	COUNT TYPE	BKG (cpm)	INSTRUMENT READING (Net cpm)	FLUSH/RE-CHARGE (N/A if not gas prop. det.) (Initials)	% ERROR ± 20% IN TOL (Initials)	RCT SIGNATURE
0630 11/01/02	[redacted]	Y	Y	Alpha	2	2813	N/A	[illegible]	[redacted]
				Beta	314	4696			
11/3/02		Y	Y	Alpha	2	2691			
				Beta	338	4492			
0625 11/4/02		Y	Y	Alpha	1	2822			
				Beta	297	4746			
				Alpha					
				Beta					
				Alpha					
				Beta					
				Alpha					
				Beta					
				Alpha					
				Beta					
				Alpha					
				Beta					
				Alpha					
				Beta					
				Alpha					
				Beta					
				Alpha					
				Beta					
				Alpha					
				Beta					
				Alpha					
				Beta					
N/A	N/A	N/A		Alpha					
				Beta			N/A	N/A	N/A

SOURCE ISOTOPE (Alpha): *Pu 239* (CSL)/(S/N)/(Registry No.): _____ Certification/(Decay Chart) Date: _____
(Circle One) (Circle One)

Source (dpm): _____ Range (cpm) ± 20%: _____

SOURCE ISOTOPE (Beta): *Sr 90* (CSL)/(S/N)/(Registry No.): _____ Certification/(Decay Chart) Date: _____
(Circle One) (Circle One)

Source (dpm): _____ Range (cpm) ± 20%: _____

Approved by:
RS Supervision:

Name (print)	Signature	[redacted]	Date
			11-11-02

$$\%Error = \frac{(Net\ cpm \div eff) - Source\ dpm}{Source\ dpm} \times (100)$$

Where Net cpm = Source cpm - Background cpm

GUIDANCE:

- The appropriate instrument data and building location is recorded on RSFORMS-02.01-04.
- Obtain an appropriate certified source or decay chart source for the instrument being tested.
- A general inspection is performed on the instrument for the following:
  - * Physical condition of the detector, cables, and instrument
  - * Instrument battery/power supply check is satisfactory
  - * Instrument audio check is satisfactory, as applicable
  - * Instrument light leak check is satisfactory, as applicable
  - * Instrument background response check is within tolerances of expected values (typically 1 minute count)
  - * Instrument corrected source count reading falls within an acceptable range (± 20% of source value typically using a 1 minute count)
- Performance test data is recorded (as applicable) to each portable contamination survey instrument with signature upon completion.

[redacted]ORTABLE SCALER CONTAMINATION INSTRUME[redacted] PERFORMANCE TEST LOG RSFORMS-02.01[redacted]

INST. TYPE/SERIAL #: *NE ELECTRA / # 1681* CAL. DUE DATE: 11/22/02 INSTRUMENT EFFICIENCY: Alpha 21.5 % Beta 32.4 %

PROBE S/N: # 1527 BLDG. T130I

This form is used to record parameters noted during daily performance checks on NE Electra, Bicron Frisk-Tech, Portable instruments with gas proportional detector. Instruments that require additional repair or service are returned to Instrumentation Repair Facility.

TIME/ DATE	RCT NAME/EMP #	IN CAL Yes No	BATT SAT Yes No	COUNT TYPE	BKG (cpm)	INSTRUMENT READING (Net cpm)	FLUSH/RE-CHARGE (N/A if not gas prop. det.) (Initials)	% ERROR ± 20% IN TOL (Initials)	RCT SIGNATURE
0630 11/01/02	[redacted]	Y	Y	Alpha	8	3058	N/A	MJ	[redacted]
				Beta	407	5169			
0720 11/3/02		Y	Y	Alpha	2	3021		SP	
				Beta	417	4959			
				Alpha					
				Beta					
				Alpha					
				Beta					
				Alpha					
				Beta					
				Alpha					
				Beta					
				Alpha					
				Beta					
				Alpha					
				Beta					
				Alpha					
				Beta					
				Alpha					
				Beta					
				Alpha					
				Beta					
				Alpha					
				Beta					
				Alpha					
				Beta					
				Alpha					
				Beta			N/A		

384

#1681

PORTABLE SCALER CONTAMINATION INSTRUMENT PERFORMANCE TEST LOG RSFORMS-02.01-04

SOURCE ISOTOPE (Alpha): *Pu 239* (CSL)/(S/N)/(Registry No.): 603577 Certification/Decay Chart Date: 9/17/02
(Circle One) (Circle One)

Source (dpm): 15023 Range (cpm) ± 20%: 2632 - 3948

SOURCE ISOTOPE (Beta): *Sr 90* (CSL)/(S/N)/(Registry No.): 604432 Certification/Decay Chart Date: 9/6/02
(Circle One) 3701 - 5552 (Circle One)

Source (dpm): 14280 Range (cpm) ± 20%: ~~3439 - 5156~~ 11/1/02

Approved by: RS Supervision:			
Name (print)	Signature	[redacted]	Date

$$\%Error = \frac{(Net\ cpm \div eff) - Source\ dpm}{Source\ dpm} \times (100)$$

Where Net cpm = Source cpm - Background cpm

GUIDANCE:

- The appropriate instrument data and building location is recorded on RSFORMS-02.01-04.
- Obtain an appropriate certified source or decay chart source for the instrument being tested.
- A general inspection is performed on the instrument for the following:
  - * Physical condition of the detector, cables, and instrument
  - * Instrument battery/power supply check is satisfactory
  - * Instrument audio check is satisfactory, as applicable
  - * Instrument light leak check is satisfactory, as applicable
  - * Instrument background response check is within tolerances of expected values (typically 1 minute count)
  - * Instrument corrected source count reading falls within an acceptable range (± 20% of source value typically using a 1 minute count)
- Performance test data is recorded (as applicable) to each portable contamination survey instrument with signature upon completion.

[redacted]ORTABLE SCALER CONTAMINATION INSTRUME[redacted] PERFORMANCE TEST LOG RSFORMS-02.01[redacted]

INST. TYPE/SERIAL #: *NE ELECTRA / #* [redacted] CAL. DUE DATE: 4/20/2 INSTRUMENT EFFICIENCY: Alpha [redacted] % Beta 1 31 %

PROBE S/N: # [redacted] BLDG. T130I

This form is used to record parameters noted during daily performance checks on NE Electra, Bicron Frisk-Tech, Portable instruments with gas proportional detector. Instruments that require additional repair or service are returned to Instrumentation Repair Facility.

TIME/ DATE	RCT NAME/EMP #	IN CAL Yes No	BATT SAT Yes No	COUNT TYPE	BKG (cpm)	INSTRUMENT READING (Net cpm)	FLUSH/RE-CHARGE (N/A if not gas prop. det.) (Initials)	% ERROR ± 20% IN TOL (Initials)	RCT SIGNATURE
[redacted]	[redacted]	Y	Y	Alpha	3	2810	N/A	MJ	[redacted]
				Beta	367	[redacted]			
0610 11/6/02		Y	Y	Alpha	4	2996		MJ	
				Beta	353	4621			
0620 11/7/02		Y	Y	Alpha	3	2857		MJ	
				Beta	341	4816			
0605 11/8/02		Y	Y	Alpha	1	2840		MJ	
				Beta	389	4790			
0615 11/9/02		Y	Y	Alpha	1	2912		MJ	
				Beta	412	4540			
0610 11/10/02		Y	Y	Alpha	0	3072		MJ	
				Beta	349	4719			
0615 11/12/02		Y	Y	Alpha	2	2776		MJ	
				Beta	422	4783			
0615 11/13/02		Y	Y	Alpha	4	2850		MJ	
				Beta	405	4612			
0620 11/14/02		Y	Y	Alpha	3	3001		MJ	
				Beta	354	4742			
0600 11/15/02		Y	Y	Alpha	3	2925		MJ	
				Beta	359	4672			
0615 11/16/02		Y	Y	Alpha	1	2838		MJ	
				Beta	382	4529			
0615 11/18/02		Y	Y	Alpha	1	2922		MJ	
				Beta	390	4690			
0615 11/19/02		Y	Y	Alpha	2	2850		MJ	
				Beta	341	4852			
0620 11/20/02		Y	Y	Alpha	2	2964	N/A	MJ	
				Beta	386	4800			

PORTABLE SCALER CONTAMINATION INSTRUMENT PERFORMANCE TEST LOG RSFORMS-02.01-04

SOURCE ISOTOPE (Alpha): *Pu 239* (CSL)/(S/N)/(Registry No.): 603577 Certification/Decay Chart Date: 11-30-02
(Circle One) (Circle One)

Source (dpm): 15022 Range (cpm) ± 20%: 2274 – 3876
2280

SOURCE ISOTOPE (Beta): *Sr 90* (CSL)/(S/N)/(Registry No.): 60[illegible] Certification/Decay Chart Date: 11-30-02
(Circle One) (Circle One)

Source (dpm): 14280 Range (cpm) ± 20%: 3599 – 5399
4878

Approved by: RS Supervision:			
Name (print)	Signature	[redacted]	Date
S Gernatt	[signature]		11-23-02

$$\%Error = \frac{(Net\ cpm \div eff) - Source\ dpm}{Source\ dpm} \times (100)$$

Where Net cpm = Source cpm - Background cpm

GUIDANCE:

- The appropriate instrument data and building location is recorded on RSFORMS-02.01-04.
- Obtain an appropriate certified source or decay chart source for the instrument being tested.
- A general inspection is performed on the instrument for the following:
  - Physical condition of the detector, cables, and instrument
  - Instrument battery/power supply check is satisfactory
  - Instrument audio check is satisfactory, as applicable
  - Instrument light leak check is satisfactory, as applicable
  - Instrument background response check is within tolerances of expected values (typically 1 minute count)
  - Instrument corrected source count reading falls within an acceptable range (± 20% of source value typically using a 1 minute count)

- Performance test data is recorded (as applicable) to each portable contamination survey instrument with signature upon completion.

[redacted]RTABLE SCALER CONTAMINATION INSTRUME[redacted]ERFORMANCE TEST LOG RSFORMS-02.01

INST. TYPE/SERIAL #: *NE ELECTRA / # 310* CAL. DUE DATE: 11/2/02 INSTRUMENT EFFICIENCY: Alpha 22.3% Beta 1 32.2%

PROBE S/N: # 187 BLDG. T130I

This form is used to record parameters noted during daily performance checks on NE Electra, Bicron Frisk-Tech, Portable instruments with gas proportional detector. Instruments that require additional repair or service are returned to Instrumentation Repair Facility.

TIME/ DATE	RCT NAME/EMP #	IN CAL Yes No	BATT SAT Yes No	COUNT TYPE	BKG (cpm)	INSTRUMENT READING (Net cpm)	FLUSH/RE-CHARGE (N/A if not gas prop. det.) (Initials)	% ERROR ± 20% IN TOL (Initials)	RCT SIGNATURE
0720 11/3/02	[redacted]	Y	Y	Alpha	4	2998	N/A	SP	[redacted]
				Beta	447	4775			
				Alpha					
				Beta					
				Alpha					
				Beta					
0615 11/6/02		Y	Y	Alpha	4	3061			
				Beta	435	4815		mj	
0625 11/7/02		Y	Y	Alpha	2	2914			
				Beta	454	4907		mj	
0610 11/8/02		Y	Y	Alpha	5	3114			
				Beta	450	4814		mj	
0610 11/9/02		Y	Y	Alpha	1	3107			
				Beta	453	4815		mj	
0615 11/11/02		Y	Y	Alpha	5	3091			
				Beta	423	4851		mj	
0620 11/12/02		Y	Y	Alpha	4	2865			
				Beta	471	4946		mj	
0620 11/13/02		Y	Y	Alpha	5	2957			
				Beta	460	4734		DBJ	
0620 11/14/02		Y	Y	Alpha	7	3059			
				Beta	387	4660		DBJ	
0605 11/15/02		Y	Y	Alpha	4	2994			
				Beta	390	11821		DBJ	
0615 11/18/02		Y	Y	Alpha	5	3013			
				Beta	459	4892		DBJ	
0615 11/19/02		Y	Y	Alpha	6	3009			
				Beta	346	4941	N/A		

388

PORTABLE SCALER CONTAMINATION INSTRUMENT PERFORMANCE TEST LOG RSFORMS-02.01-04

SOURCE ISOTOPE (Alpha): *Pu 239* (CSL)/(S/N)/(Registry No.): 603597 Certification/(Decay Chart) Date: 11-30-02
(Circle One) (Circle One)

Source (dpm): 15022 Range (cpm) ± 20%: 2644 – 3966

SOURCE ISOTOPE (Beta): *Sr 90* (CSL)/(S/N)/(Registry No.): 60[illegible] Certification/(Decay Chart) Date: [illegible]
(Circle One) (Circle One)

Source (dpm): ~~[illegible]~~ 14280 M. [illegible] Range (cpm) ± 20%: ~~3700 – [illegible]~~ 3713 – 5567 M [illegible]

Approved by: RS Supervision:			
Name (print)	Signature	[redacted]	Date 11-20-02

$$\%Error = \frac{(Net\ cpm \div eff) - Source\ dpm}{Source\ dpm} \times (100)$$

Where Net cpm = Source cpm - Background cpm

GUIDANCE:

- The appropriate instrument data and building location is recorded on RSFORMS-02.01-04.
- Obtain an appropriate certified source or decay chart source for the instrument being tested.
- A general inspection is performed on the instrument for the following:
  - Physical condition of the detector, cables, and instrument
  - Instrument battery/power supply check is satisfactory
  - Instrument audio check is satisfactory, as applicable
  - Instrument light leak check is satisfactory, as applicable
  - Instrument background response check is within tolerances of expected values (typically 1 minute count)
  - Instrument corrected source count reading falls within an acceptable range (± 20% of source value typically using a 1 minute count)
- Performance test data is recorded (as applicable) to each portable contamination survey instrument with signature upon completion.

389

PO[illegible]ABLE SCALER CONTAMINATION INSTRUMENT [illegible]FORMANCE TEST LOG RSFORMS-02.01-04[illegible]

INST. TYPE/SERIAL #: *NE ELECTRA / #* 3110 CAL. DUE DATE: 11/29/02 INSTRUMENT EFFICIENCY: Alpha 22.0 % Beta 132.5 %

PROBE S/N: # 1879 BLDG. T130I

This form is used to record parameters noted during daily performance checks on NE Electra, Bicron Frisk-Tech, Portable instruments with gas proportional detector. Instruments that require additional repair or service are returned to Instrumentation Repair Facility.

TIME/ DATE	RCT NAME/EMP #	IN CAL Yes No	BATT SAT Yes No	COUNT TYPE	BKG (cpm)	INSTRUMENT READING (Net cpm)	FLUSH/RE-CHARGE (N/A if not gas prop. det.) (Initials)	% ERROR ± 20% IN TOL (Initials)	RCT SIGNATURE
0615 11/20/02	[redacted]	Y	Y	Alpha	2	2688	N/A	DBJ	[redacted]
				Beta	402	4856			
0615 11/21/02		Y	Y	Alpha	3	2941		DBJ	
				Beta	444	4577			
0620 11/22/02		Y	Y	Alpha	4	2717		DBJ	
				Beta	447	4802			
0630 11/23/02		Y	Y	Alpha	5	3007		DBJ	
				Beta	442	4965			
0630 11/25/02		Y	Y	Alpha	7	2994		DBJ	
				Beta	417	4899			
0615 11/26/02		Y	Y	Alpha	4	2969		DBJ	
				Beta	419	4889			
0615 11/27/02		Y	Y	Alpha	0	3004		DBJ	
				Beta	436	4835			
NA		NA	NA	Alpha	NA	NA		NA	
				Beta					
				Alpha					
				Beta					
				Alpha					
				Beta					
				Alpha					
				Beta					
				Alpha					
				Beta					
NA	NA	NA	NA	Alpha			N/A	NA	NA
				Beta	NA	NA			

390

 * Guidance for use of this form is located on the back of the form

SOURCE ISOTOPE (Alpha): *Pu 239* (CSL)/(S/N)/(Registry No.): 603577 Certification/Decay Chart Date: 11/30/02
(Circle One) (Circle One)

Source (dpm): 15023 Range (cpm) ± 20%: 2644 - 3966

SOURCE ISOTOPE (Beta): *Sr 90* (CSL)/(S/N)/(Registry No.): 604432 Certification/Decay Chart Date: 11/30/02
(Circle One) (Circle One)

Source (dpm): 14280 Range (cpm) ± 20%: 3713 - 5569

Approved by:
RS Supervision: SCHMITT [redacted] 12-4-02
Name (print) Signature Date

$$\%Error = \frac{(Net\ cpm \div eff) - Source\ dpm}{Source\ dpm} \times (100)$$

Where Net cpm = Source cpm - Background cpm

GUIDANCE:

- The appropriate instrument data and building location is recorded on RSFORMS-02.01-04.
- Obtain an appropriate certified source or decay chart source for the instrument being tested.
- A general inspection is performed on the instrument for the following:
  - * Physical condition of the detector, cables, and instrument
  - * Instrument battery/power supply check is satisfactory
  - * Instrument audio check is satisfactory, as applicable
  - * Instrument light leak check is satisfactory, as applicable
  - * Instrument background response check is within tolerances of expected values (typically 1 minute count)
  - * Instrument corrected source count reading falls within an acceptable range (± 20% of source value typically using a 1 minute count)
- Performance test data is recorded (as applicable) to each portable contamination survey instrument with signature upon completion.

P[redacted]TABLE SCALER CONTAMINATION INSTRUMENT[redacted]RFORMANCE TEST LOG RSFORMS-02.01-04[redacted]

INST. TYPE/SERIAL #: *NE ELECTRA / #* 1589 CAL. DUE DATE: 4/30/03 INSTRUMENT EFFICIENCY: Alpha 21.5 % Beta 31.5 %

PROBE S/N: # 1456 BLDG. T130I

This form is used to record parameters noted during daily performance checks on NE Electra, Bicron Frisk-Tech, Portable instruments with gas proportional detector. Instruments that require additional repair or service are returned to Instrumentation Repair Facility.

TIME/ DATE	RCT NAME/EMP #	IN CAL Yes No	BATT SAT Yes No	COUNT TYPE	BKG (cpm)	INSTRUMENT READING (Net cpm)	FLUSH/RE-CHARGE (N/A if not gas prop. det.) (Initials)	% ERROR ± 20% IN TOL (Initials)	RCT SIGNATURE
0610 11/21/02	[redacted]	Y	Y	Alpha	2	2861	N/A	DMJ	[redacted]
				Beta	383	4433			
0620 11/22/02		Y	Y	Alpha	2	2925		DMJ	
				Beta	377	4391			
0630 11/23/02		Y	Y	Alpha	2	3007		DMJ	
				Beta	370	4324			
0630 11/25/02		Y	Y	Alpha	2	2772		DMJ	
				Beta	367	4494			
0615 11/26/02		Y	Y	Alpha	3	2984		DMJ	
				Beta	372	4520			
0615 11/27/02		Y	Y	Alpha	1	2954		DMJ	
				Beta	391	4918			
NA		NA	NA	Alpha	NA	NA		NA	
				Beta					
				Alpha					
				Beta					
				Alpha					
				Beta					
				Alpha					
				Beta					
				Alpha					
				Beta					
				Alpha					
				Beta					
				Alpha					
				Beta					
NA	NA	NA	NA	Alpha			N/A	NA	NA
				Beta	NA	NA			

392

PORTABLE SCALER CONTAMINATION INSTRUMENT PERFORMANCE TEST LOG RSFORMS-02.01-04

SOURCE ISOTOPE (Alpha): *Pu 239* (CSL)/(S/N)/(Registry No.): 603577 Certification/Decay Chart Date: 11/30/02
(Circle One) (Circle One)

Source (dpm): 15023 Range (cpm) ± 20%: 2584 - 3876

SOURCE ISOTOPE (Beta): *Sr 90* (CSL)/(S/N)/(Registry No.): 604432 Certification/Decay Chart Date: 11/30/02
(Circle One) (Circle One)

Source (dpm): 14280 Range (cpm) ± 20%: 3599 - 5397

Approved by:
RS Supervision: [signature] [signature] [redacted] 12-4-02
Name (print) Signature Date

$$\%Error = \frac{(Net\ cpm \div eff) - Source\ dpm}{Source\ dpm} \times (100)$$

Where Net cpm = Source cpm - Background cpm

GUIDANCE:

- The appropriate instrument data and building location is recorded on RSFORMS-02.01-04.
- Obtain an appropriate certified source or decay chart source for the instrument being tested.
- A general inspection is performed on the instrument for the following:
  - * Physical condition of the detector, cables, and instrument
  - * Instrument battery/power supply check is satisfactory
  - * Instrument audio check is satisfactory, as applicable
  - * Instrument light leak check is satisfactory, as applicable
  - * Instrument background response check is within tolerances of expected values (typically 1 minute count)
  - * Instrument corrected source count reading falls within an acceptable range (± 20% of source value typically using a 1 minute count)
- Performance test data is recorded (as applicable) to each portable contamination survey instrument with signature upon completion.

PORTABLE SCALER CONTAMINATION INSTRUMENT PERFORMANCE TEST LOG RSFORMS-02.01-04

INST. TYPE/SERIAL #: *NE ELECTRA / #* 3113 CAL. DUE DATE: 3/24/03 INSTRUMENT EFFICIENCY: Alpha 21.9 % / Beta 30.3 %

PROBE S/N: # 1882 BLDG. T130I

This form is used to record parameters noted during daily performance checks on NE Electra, Bicron Frisk-Tech, Portable instruments with gas proportional detector. Instruments that require additional repair or service are returned to Instrumentation Repair Facility.

TIME/ DATE	RCT NAME/EMP #	IN CAL Yes No	BATT SAT Yes No	COUNT TYPE	BKG (cpm)	INSTRUMENT READING (Net cpm)	FLUSH/RE-CHARGE (N/A if not gas prop. det.) (Initials)	% ERROR ± 20% IN TOL (Initials)	RCT SIGNATURE
1305 11/12/02	[redacted]	Y	Y	Alpha	0	2927	N/A	DBJ	[redacted]
				Beta	320	4657			
0615 11/13/02		Y	Y	Alpha	1	3080			
				Beta	319	4264			
0615 11/14/02		Y	Y	Alpha	2	3067			
				Beta	297	4341			
0600 11/15/02		Y	Y	Alpha	0	2794			
				Beta	324	4982			
0615 11/16/02		Y	Y	Alpha	3	3011			
				Beta	351	4368			
0615 11/18/02		Y	Y	Alpha	1	2637			
				Beta	306	4720			
0615 11/19/02		Y	Y	Alpha	0	2785			
				Beta	321	4600			
0615 11/20/02		Y	Y	Alpha	0	2911			
				Beta	342	4312			
0615 11/21/02		Y	Y	Alpha	4	2900			
				Beta	326	4800			
0615 11/22/02		Y	Y	Alpha	2	3024			
				Beta	354	4208			
0630 11/23/02		Y	Y	Alpha	1	2829			
				Beta	309	4772			
0630 11/25/02		Y	Y	Alpha	0	2990			
				Beta	356	4253			
0615 11/26/02		Y	Y	Alpha	3	2997			
				Beta	388	4377			
0610 11/27/02		Y	Y	Alpha	0	2903	N/A		
				Beta	352	4665			

374

3113

P[redacted]ABLE SCALER CONTAMINATION INSTRUMENT[redacted]RFORMANCE TEST LOG RSFORMS-02.01-04[redacted]

SOURCE ISOTOPE (Alpha): *Pu 239* (CSL)/(S/N)/(Registry No.): 603577 Certification/Decay Chart Date: 11/30/02
(Circle One) (Circle One)

Source (dpm): 15023 Range (cpm) ± 20%: 2632 - 3948

SOURCE ISOTOPE (Beta): *Sr 90* (CSL)/(S/N)/(Registry No.): 604432 Certification/Decay Chart Date: 11/30/02
(Circle One) (Circle One)

Source (dpm): 14280 Range (cpm) ± 20%: 3461 - 5192

Approved by:
RS Supervision: [redacted]

Name (print)	Signature	Date
[redacted]	[redacted]	12-4-02

$$\%Error = \frac{(Net\ cpm \div eff) - Source\ dpm}{Source\ dpm} \times (100)$$

Where Net cpm = Source cpm - Background cpm

GUIDANCE:

- The appropriate instrument data and building location is recorded on RSFORMS-02.01-04.
- Obtain an appropriate certified source or decay chart source for the instrument being tested.
- A general inspection is performed on the instrument for the following:
  - * Physical condition of the detector, cables, and instrument
  - * Instrument battery/power supply check is satisfactory
  - * Instrument audio check is satisfactory, as applicable
  - * Instrument light leak check is satisfactory, as applicable
  - * Instrument background response check is within tolerances of expected values (typically 1 minute count)
  - * Instrument corrected source count reading falls within an acceptable range (± 20% of source value typically using a 1 minute count)
- Performance test data is recorded (as applicable) to each portable contamination survey instrument with signature upon completion.

[redacted]RTABLE SCALER CONTAMINATION INSTRUME[redacted]ERFORMANCE TEST LOG RSFORMS-02.01

INST. TYPE/SERIAL #: *NE ELECTRA / #* 280[illegible] CAL. DUE DATE: [illegible] INSTRUMENT EFFICIENCY: Alpha [illegible]% Beta [illegible]%

PROBE S/N: # 1912 BLDG. T130I

This form is used to record parameters noted during daily performance checks on NE Electra, Bicron Frisk-Tech, Portable instruments with gas proportional detector. Instruments that require additional repair or service are returned to Instrumentation Repair Facility.

TIME/ DATE	RCT NAME/EMP #	IN CAL Yes No	BATT SAT Yes No	COUNT TYPE	BKG (cpm)	INSTRUMENT READING (Net cpm)	FLUSH/RE-CHARGE (N/A if not gas prop. det.) (Initials)	% ERROR ± 20% IN TOL (Initials)	RCT SIGNATURE
0725 11/3/02	[redacted]	Y	Y	Alpha	2	2870	N/A	[illegible]	[redacted]
				Beta	329	4450			
[illegible]		[illegible]	[illegible]	Alpha	2	[illegible]		[illegible]	
				Beta	[illegible]	[illegible]			
[illegible]		[illegible]	[illegible]	Alpha	[illegible]	[illegible]		[illegible]	
				Beta	[illegible]	[illegible]			
0615 11/6/02		Y	Y	Alpha	1	2952			
				Beta	344	4193		mj	
0625 11/7/02		Y	Y	Alpha	3	2931			
				Beta	389	4541		mj	
0615 11/8/02		Y	Y	Alpha	4	2964			
				Beta	379	4523		mj	
0605 11/9/02		Y	Y	Alpha	2	2965			
				Beta	376	4348		mj	
0615 11/11/02		Y	Y	Alpha	3	2934			
				Beta	339	4359		mj	
0615 11/12/02		Y	Y	Alpha	4	2998			
				Beta	360	4545		mj	
N/A		N/A	N/A	Alpha	N/A	N/A		N/A	
				Beta					
				Alpha					
				Beta					
				Alpha					
				Beta					
				Alpha					
				Beta					
N/A	N/A	N/A	N/A	Alpha					
				Beta	N/A	N/A	N/A	N/A	N/A

PORTABLE SCALER CONTAMINATION INSTRUMENT PERFORMANCE TEST LOG RSFORMS-02.01-04

SOURCE ISOTOPE (Alpha): *Pu 239* (CSL)/(S/N)/(Registry No.): 605277 Certification/(Decay Chart) Date: 11-30-02
(Circle One) (Circle One)

Source (dpm): 15023 Range (cpm) ± 20%: 2644 – 3966
3966

SOURCE ISOTOPE (Beta): *Sr 90* (CSL)/(S/N)/(Registry No.): 604432 Certification/(Decay Chart) Date: 11-30-02
(Circle One) (Circle One)

Source (dpm): ~~14257~~ 14280 Range (cpm) ± 20%: 3428 – 5740 ~~3420 – 5730~~

Approved by:
RS Supervision: [signature] [signature] [redacted] 12-5-02

Name (print) Signature Date

$$\%Error = \frac{(Net\ cpm \div eff) - Source\ dpm}{Source\ dpm} \times (100)$$

Where Net cpm = Source cpm - Background cpm

GUIDANCE:

- The appropriate instrument data and building location is recorded on RSFORMS-02.01-04.
- Obtain an appropriate certified source or decay chart source for the instrument being tested.
- A general inspection is performed on the instrument for the following:
  - Physical condition of the detector, cables, and instrument
  - Instrument battery/power supply check is satisfactory
  - Instrument audio check is satisfactory, as applicable
  - Instrument light leak check is satisfactory, as applicable
  - Instrument background response check is within tolerances of expected values (typically 1 minute count)
  - Instrument corrected source count reading falls within an acceptable range (± 20% of source value typically using a 1 minute count)
- Performance test data is recorded (as applicable) to each portable contamination survey instrument with signature upon completion.

397

PORTABLE SCALER CONTAMINATION INSTRUME[redacted] PERFORMANCE TEST LOG RSFORMS-02.01[redacted]

INST. TYPE/SERIAL #: *NE ELECTRA / #* 1681 CAL. DUE DATE: 11-22-02 INSTRUMENT EFFICIENCY: Alpha 21.5 % Beta 132.4 %

PROBE S/N: # 1527 BLDG. T130I

This form is used to record parameters noted during daily performance checks on NE Electra, Bicron Frisk-Tech, Portable instruments with gas proportional detector. Instruments that require additional repair or service are returned to Instrumentation Repair Facility.

TIME/ DATE	RCT NAME/EMP #	IN CAL Yes No	BATT SAT Yes No	COUNT TYPE	BKG (cpm)	INSTRUMENT READING (Net cpm)	FLUSH/RE-CHARGE (N/A if not gas prop. det.) (Initials)	% ERROR ± 20% IN TOL (Initials)	RCT SIGNATURE
0600 10/18/02	[redacted]	Y	Y	Alpha	4	3059	N/A	JO	[redacted]
				Beta	404	4842			
0615 10.21.02		Y	Y	Alpha	4	2871		M.	
				Beta	342	4620			
0610 10/22/02		Y	Y	Alpha	3	3053		JO	
				Beta	355	5278			
0600 10/23/02		Y	Y	Alpha	3	2946		JO	
				Beta	432	5002			
0600 10/24/02		Y	Y	Alpha	3	2908		JO	
				Beta	413	4755			
0620 10/25/02		Y	Y	Alpha	4	2916		DO	
				Beta	444	4421			
0630 10/26/02		Y	Y	Alpha	5.0	~~4660~~ 3054			
				Beta	399	~~5060~~ 4719			
0630 10/28/02		Y	Y	Alpha	5	2865 10-26-02			
				Beta	363	4882			
0610 10/29/02		Y	Y	Alpha	7	2939			
				Beta	502	5374			
0610 10/30/02		Y	Y	Alpha	5	2901			
				Beta	370	4927			
0640 10/31/02		Y	Y	Alpha	5	2890			
				Beta	399	4870			
0720 11/3/02		Y	Y	Alpha	2	3021			
				Beta	417	4959			
N/A		N/A	N/A	Alpha	N/A	N/A		N/A	
				Beta					
N/A	N/A	N/A	N/A	Alpha					
				Beta	N/A	N/A	N/A	N/A	

398

PORTABLE SCALER CONTAMINATION INSTRUMENT PERFORMANCE TEST LOG RSFORMS-02.01-04

SOURCE ISOTOPE (Alpha): *Pu 239* (CSL)/(S/N)/(Registry No.): 603577 Certification/Decay Chart Date: 9-17-02
(Circle One) (Circle One)

Source (dpm): 15023 Range (cpm) ± 20%: 2584 - ~~3876~~ 3875 ~~604432~~ 604432

SOURCE ISOTOPE (Beta): *Sr 90* (CSL)/(S/N)/(Registry No.): ~~604432~~ ~~604202~~ 604432 Certification/Decay Chart Date: 9-6-02
(Circle One) (Circle One)

Source (dpm): ~~14280~~ 14309 Range (cpm) ± 20%: 3709-5563

Approved by:
RS Supervision: [redacted] 11-11-02
Name (print) Signature Date

$$\%Error = \frac{(Net\ cpm \div eff) - Source\ dpm}{Source\ dpm} \times (100)$$

Where Net cpm = Source cpm - Background cpm

GUIDANCE:

- The appropriate instrument data and building location is recorded on RSFORMS-02.01-04.
- Obtain an appropriate certified source or decay chart source for the instrument being tested.
- A general inspection is performed on the instrument for the following:
  - * Physical condition of the detector, cables, and instrument
  - * Instrument battery/power supply check is satisfactory
  - * Instrument audio check is satisfactory, as applicable
  - * Instrument light leak check is satisfactory, as applicable
  - * Instrument background response check is within tolerances of expected values (typically 1 minute count)
  - * Instrument corrected source count reading falls within an acceptable range (± 20% of source value typically using a 1 minute count)
- Performance test data is recorded (as applicable) to each portable contamination survey instrument with signature upon completion.

[redacted]ORTABLE SCALER CONTAMINATION INSTRUME[redacted] PERFORMANCE TEST LOG RSFORMS-02.01[redacted]

INST. TYPE/SERIAL #: *NE ELECTRA / #* 3113 CAL. DUE DATE: 3-24-03 INSTRUMENT EFFICIENCY: Alpha 21.9 % Beta 130.1%

PROBE S/N: # 1882 BLDG. T130I

This form is used to record parameters noted during daily performance checks on NE Electra, Bicron Frisk-Tech, Portable instruments with gas proportional detector. Instruments that require additional repair or service are returned to Instrumentation Repair Facility.

TIME/ DATE	RCT NAME/EMP #	IN CAL Yes No	BATT SAT Yes No	COUNT TYPE	BKG (cpm)	INSTRUMENT READING (Net cpm)	FLUSH/RE-CHARGE (N/A if not gas prop. det.) (Initials)	% ERROR ± 20% IN TOL (Initials)	RCT SIGNATURE
0600 10/7/02	[redacted]	Y	Y	Alpha	1	2940	N/A	SD	[redacted]
				Beta	328	3831			
0600 10/8/02		Y	Y	Alpha	1	2955		JR	
				Beta	321	4036			
0625 10.21.02		Y	Y	Alpha	3	2743		GM	
				Beta	354	4305			
0610 10/23/02		Y	Y	Alpha	4	2975		JD	
				Beta	325	3974			
0600 10/23/02		Y	Y	Alpha	1	2911		JR	
				Beta	303	3945			
0600 10/24/02		Y	Y	Alpha	2	2826		JR	
				Beta	326	3910			
0615 10/25/02		Y	Y	Alpha	1	2646		my	
				Beta	330	4768			
0915 10/26/02		Y	Y	Alpha	0	3113		JR	
				Beta	304	4000			
0620 10/28/02		Y	Y	Alpha	4	2773		my	
				Beta	314	4597			
0610 10/29/02		Y	Y	Alpha	1	2991		my	
				Beta	376	4334			
[illegible]		Y	Y	Alpha	3	[illegible]		GM	
				Beta	320	[illegible]			
0620 10/31/02		Y	Y	Alpha	1	2867		my	
				Beta	312	4556			
0720 11/3/02		Y	Y	Alpha	2	2691	↓	SP	
				Beta	338	4492			
N/A		N/A	N/A	Alpha	N/A	N/A	N/A	N/A	
				Beta					

 * Guidance for use of this form is located on the back of the form

400

SOURCE ISOTOPE (Alpha): *Pu 239* (CSL)/(S/N)/(Registry No.): 603577 Certification/Decay Chart Date: 9/17/02
(Circle One) (Circle One)

Source (dpm): 15023 Range (cpm) ± 20%: 2632 - 3948

SOURCE ISOTOPE (Beta): *Sr 90* (CSL)/(S/N)/(Registry No.): 604432 Certification/Decay Chart Date: 9/6/02
(Circle One) (Circle One)

Source (dpm): ~~14280~~ 14305 SM 10/11/02 Range (cpm) ± 20%: ~~3438 - 5158~~ 3446 - 5168 SM 10/11/02

Approved by: RS Supervision:			
Name (print)	Signature	[redacted]	Date: 11-11-02

$$\%Error = \frac{(Net\ cpm \div eff) - Source\ dpm}{Source\ dpm} \times (100)$$

Where Net cpm = Source cpm - Background cpm

GUIDANCE:

- The appropriate instrument data and building location is recorded on RSFORMS-02.01-04.
- Obtain an appropriate certified source or decay chart source for the instrument being tested.
- A general inspection is performed on the instrument for the following:
  - * Physical condition of the detector, cables, and instrument
  - * Instrument battery/power supply check is satisfactory
  - * Instrument audio check is satisfactory, as applicable
  - * Instrument light leak check is satisfactory, as applicable
  - * Instrument background response check is within tolerances of expected values (typically 1 minute count)
  - * Instrument corrected source count reading falls within an acceptable range (± 20% of source value typically using a 1 minute count)
- Performance test data is recorded (as applicable) to each portable contamination survey instrument with signature upon completion.

PORTABLE SCALER CONTAMINATION INSTRUME PERFORMANCE TEST LOG RSFORMS-02.01

INST. TYPE/SERIAL #: *NE ELECTRA / #* 3110 CAL. DUE DATE: 11-29-02 INSTRUMENT EFFICIENCY: Alpha 22 % Beta 32.5 %

PROBE S/N: # 1879 BLDG. T130I

This form is used to record parameters noted during daily performance checks on NE Electra, Bicron Frisk-Tech, Portable instruments with gas proportional detector. Instruments that require additional repair or service are returned to Instrumentation Repair Facility.

TIME/ DATE	RCT NAME/EMP #	IN CAL Yes No	BATT SAT Yes No	COUNT TYPE	BKG (cpm)	INSTRUMENT READING (Net cpm)	FLUSH/RE-CHARGE (N/A if not gas prop. det.) (Initials)	% ERROR ± 20% IN TOL (Initials)	RCT SIGNATURE
0600 10/18/02	[redacted]	Y	Y	Alpha	4	3150	N/A	JD	[redacted]
				Beta	386	4470			
0615 10/21/02		Y	Y	Alpha	5	3011		MJ	
				Beta	364	4539			
0610 10/23/02		Y	Y	Alpha	2	3021		JD	
				Beta	397	4417			
0600 10/23/02		Y	Y	Alpha	2	3030		JD	
				Beta	361	4506			
0600 10/24/02		Y	Y	Alpha	6	3041		JD	
				Beta	391	4331			
0615 10/25/02		Y	Y	Alpha	4	3029			
				Beta	387	4931			
0715 10-26-02		Y	Y	Alpha	6	3209			
				Beta	470	4331			
0620 10/28/02		Y	Y	Alpha	2	2890			
				Beta	373	4849			
0608 10/29/02		Y	Y	Alpha	4	2927			
				Beta	463	4978			
0610 10/30/02		Y	Y	Alpha	3	2961			
				Beta	36	4799			
1720 10/31/02		Y	Y	Alpha	2.0	3019			
				Beta	441	4304			
0720 11/3/02		Y	Y	Alpha	4	2998			
				Beta	447	4775			
N/A	N/A	N/A	N/A	Alpha	N/A	N/A	▼	N/A	
				Beta	↓	↓			
N/A	N/A	N/A	N/A	Alpha	↓	↓	N/A	N/A	N/A
				Beta	N/A	N/A			

4/02

PORTABLE SCALER CONTAMINATION INSTRUMENT PERFORMANCE TEST LOG RSFORMS-02.01-04

SOURCE ISOTOPE (Alpha): *Pu 239* (CSL)/(S/N)/(Registry No.): 603577 Certification/Decay Chart Date: 9/17/02
(Circle One) (Circle One)

Source (dpm): 15023 Range (cpm) ± 20%: 2644 - 3966

SOURCE ISOTOPE (Beta): *Sr 90* (CSL)/(S/N)/(Registry No.): 604432 Certification/Decay Chart Date: 9/6/02
(Circle One) (Circle One)

Source (dpm): ~~14282~~ 14309 Range (cpm) ± 20%: ~~3713 - 5569~~ 5321 - 5580

Approved by:
RS Supervision: [redacted] 11-11-02
Name (print) Signature Date

$$\%Error = \frac{(Net\ cpm \div eff) - Source\ dpm}{Source\ dpm} \times (100)$$

Where Net cpm = Source cpm - Background cpm

GUIDANCE:

- The appropriate instrument data and building location is recorded on RSFORMS-02.01-04.
- Obtain an appropriate certified source or decay chart source for the instrument being tested.
- A general inspection is performed on the instrument for the following:
  - * Physical condition of the detector, cables, and instrument
  - * Instrument battery/power supply check is satisfactory
  - * Instrument audio check is satisfactory, as applicable
  - * Instrument light leak check is satisfactory, as applicable
  - * Instrument background response check is within tolerances of expected values (typically 1 minute count)
  - * Instrument corrected source count reading falls within an acceptable range (± 20% of source value typically using a 1 minute count)
- Performance test data is recorded (as applicable) to each portable contamination survey instrument with signature upon completion.

[redacted]ORTABLE SCALER CONTAMINATION INSTRUME[redacted] PERFORMANCE TEST LOG RSFORMS-02.01[redacted]

INST. TYPE/SERIAL #: *NE ELECTRA / #* 2404 CAL. DUE DATE: 3-2503 INSTRUMENT EFFICIENCY: Alpha 22.0 % Beta 130.0 %

PROBE S/N: # 1912 BLDG. T130I

This form is used to record parameters noted during daily performance checks on NE Electra, Bicron Frisk-Tech, Portable instruments with gas proportional detector. Instruments that require additional repair or service are returned to Instrumentation Repair Facility.

TIME/ DATE	RCT NAME/EMP #	IN CAL Yes No	BATT SAT Yes No	COUNT TYPE	BKG (cpm)	INSTRUMENT READING (Net cpm)	FLUSH/RE-CHARGE (N/A if not gas prop. det.) (Initials)	% ERROR ± 20% IN TOL (Initials)	RCT SIGNATURE
0600 10/18/02	[redacted]	Y	Y	Alpha	0	2926	N/A	JD	[redacted]
				Beta	359	3881			
0615 10.21.02		Y	Y	Alpha	1	2763		M.	
				Beta	283	4204			
0610 10/22/02		Y	Y	Alpha	2	3046		JE	
				Beta	327	3864			
0610 10/23/02		Y	Y	Alpha	4	2901		JE	
				Beta	347	3791			
0610 10/24/02		Y	Y	Alpha	3	3018		JE	
				Beta	330	3973			
0615 10/25/02		Y	Y	Alpha	1	2844		MM	
				Beta	347	4171			
0720 10/26/02		Y	Y	Alpha	0	3082		JE	
				Beta	353	3964			
0625 10/28/02		Y	Y	Alpha	3	2763		JD	
				Beta	321	4485			
0615 10/29/02		Y	Y	Alpha	2	2957		JD	
				Beta	396	4055			
[illegible]		Y	Y	Alpha	1	[illegible]		[illegible]	
				Beta	[illegible]	[illegible]			
0615 10/31/02		Y	Y	Alpha	3	2764		DM	
				Beta	324	4507			
0720 11/3/02		~~Y~~	~~Y~~	Alpha	2	2870		~~SP~~	
				Beta	~~329~~	~~4450~~			
N/A		N/A	N/A	Alpha	N/A	N/A		N/A	
				Beta					
N/A		N/A	N/A	Alpha	N/A	N/A	N/A	N/A	N/A
				Beta	N/A	N/A			

PORTABLE SCALER CONTAMINATION INSTRUMENT PERFORMANCE TEST LOG RSFORMS-02.01-04

SOURCE ISOTOPE (Alpha): *Pu 239* (CSL)/(S/N)/(Registry No.): 603577 60355-7 Sn 10/16/02 Certification/Decay Chart Date: 9-17-02
(Circle One) (Circle One)

Source (dpm): 15023 Range (cpm) ± 20%: 2644 - 3966

SOURCE ISOTOPE (Beta): *Sr 90* (CSL)/(S/N)/(Registry No.): 604432 Certification/Decay Chart Date: 9-6-02
(Circle One) 3435 - 5151 (Circle One)

Source (dpm): ~~14332~~ 14309 Sn 10/16/02 Range (cpm) ± 20%: ~~3434 - 5154~~ Sn 10/16/02

Approved by:
RS Supervision:

Name (print)	Signature	[redacted]	Date
[illegible]	[illegible]		11-11-02

$$\%Error = \frac{(Net\ cpm \div eff) - Source\ dpm}{Source\ dpm} \times (100)$$

Where Net cpm = Source cpm - Background cpm

GUIDANCE:

- The appropriate instrument data and building location is recorded on RSFORMS-02.01-04.
- Obtain an appropriate certified source or decay chart source for the instrument being tested.
- A general inspection is performed on the instrument for the following:
  - * Physical condition of the detector, cables, and instrument
  - * Instrument battery/power supply check is satisfactory
  - * Instrument audio check is satisfactory, as applicable
  - * Instrument light leak check is satisfactory, as applicable
  - * Instrument background response check is within tolerances of expected values (typically 1 minute count)
  - * Instrument corrected source count reading falls within an acceptable range (± 20% of source value typically using a 1 minute count)
- Performance test data is recorded (as applicable) to each portable contamination survey instrument with signature upon completion.

PORTABLE SCALER CONTAMINATION INSTRUMENT PERFORMANCE TEST LOG RSFORMS-02[redacted]-04

Alpha Beta

INST. TYPE/SERIAL #: NE Electra 3110 CAL. DUE DATE: 11-29-02 INSTRUMENT EFFICIENCY: 20.9 / 34.0

PROBE S/N: 1879 BLDG. T-130-I

This form is used to record parameters noted during daily performance checks on NE Electra, Bicron Frisk-Tech, Portable instruments with gas proportional detector. Instruments that require additional repair or service are returned to Instrumentation Repair Facility.

TIME/ DATE	RCT NAME/EMP #	IN CAL Yes No	BATT SAT Yes No	COUNT TYPE	BKG (cpm)	INSTRUMENT READING (Net cpm)	FLUSH/RE-CHARGE (N/A if not gas prop. det.) (Initials)	% ERROR ± 20% IN TOL (Initials)	RCT SIGNATURE
0600 10/07/02	[redacted]	Y	Y	Alpha	6	2865	NA	JN	[redacted]
				Beta	401	4254			
0-3 10-5-02			Y	Alpha	7	2902		N.A.	
				Beta	365	4191			
0615 10/09/02		YES	YES	Alpha	4	2965			
				Beta	356	4367			
0618 10/10/02		YES	YES	Alpha	5	2880			
				Beta	393	4432			
0618 10/11/02		YES	YES	Alpha	6	2859			
				Beta	353	4469			
0610 10/14/02		YES	YES	Alpha	5	2818			
				Beta	412	4240			
NA		NA	NA	Alpha	NA	NA		NA	
				Beta					
				Alpha					
				Beta					
				Alpha					
				Beta					
				Alpha					
				Beta					
				Alpha					
				Beta					
				Alpha					
				Beta					
				Alpha					
				Beta					
NA	NA	NA	NA	Alpha				NA	NA
				Beta	NA	NA			

4.0.6

PORTABLE SCALER CONTAMINATION INSTRUMENT PERFORMANCE TEST LOG RSFORMS-02.01-04

SOURCE ISOTOPE (Alpha): Pu-239 (CSL)/(S/N)/(Registry No.): 605577 Certification/Decay Chart Date: 1-02-02
(Circle One) (Circle One)

Source (dpm): 15523 Range (cpm) ± 20%: ~~3840 - 5760~~ 2632 - 3948 (J)

SOURCE ISOTOPE (Beta): Sr-90 (CSL)/(S/N)/(Registry No.): 604432 Certification/Decay Chart Date: 1-02-02
(Circle One) (Circle One)

Source (dpm): M ~~1433~~ 14309 Range (cpm) ± 20%: 3892 - 5838

Approved by:
RS Supervision:
James W Smith James W Smith [redacted] 10-14-02
Name (print) Signature E Date

$$\%Error = \frac{(Net\ cpm \div eff) - Source\ dpm}{Source\ dpm} \times (100)$$

Where Net cpm = Source cpm - Background cpm

GUIDANCE:

- The appropriate instrument data and building location is recorded on RSFORMS-02.01-04.
- Obtain an appropriate certified source or decay chart source for the instrument being tested.
- A general inspection is performed on the instrument for the following:
  - * Physical condition of the detector, cables, and instrument
  - * Instrument battery/power supply check is satisfactory
  - * Instrument audio check is satisfactory, as applicable
  - * Instrument light leak check is satisfactory, as applicable
  - * Instrument background response check is within tolerances of expected values (typically 1 minute count)
  - * Instrument corrected source count reading falls within an acceptable range (± 20% of source value typically using a 1 minute count)
- Performance test data is recorded (as applicable) to each portable contamination survey instrument with signature upon completion.

PORTABLE SCALER CONTAMINATION INSTRUMENT PERFORMANCE TEST LOG RSFORMS-02.01-04

INST. TYPE/SERIAL #: NE 3113 CAL. DUE DATE: 3-24-03 INSTRUMENT EFFICIENCY: Alpha 21.9 / Beta 30.1

PROBE S/N: 3113 BLDG. T130I

This form is used to record parameters noted during daily performance checks on NE Electra, Bicron Frisk-Tech, Portable instruments with gas proportional detector. Instruments that require additional repair or service are returned to Instrumentation Repair Facility.

TIME/ DATE	RCT NAME/EMP #	IN CAL Yes No	BATT SAT Yes No	COUNT TYPE	BKG (cpm)	INSTRUMENT READING (Net cpm)	FLUSH/RE-CHARGE (N/A if not gas prop. det.) (Initials)	% ERROR ± 20% IN TOL (Initials)	RCT SIGNATURE
0600 9-30-02	[redacted]	Y	Y	Alpha	2	2968	NA	SN	[redacted]
				Beta	341	3953			
0620 100102		YES	YES	Alpha	1	2946		[illegible]	
				Beta	281	3898			
0617 100202		YES	YES	Alpha	2	2976		[illegible]	
				Beta	367	4087			
0616 100302		YES	YES	Alpha	1	2833		[illegible]	
				Beta	320	4386			
0626 100402		YES	YES	Alpha	1	2949		[illegible]	
				Beta	329	4026			
0600 100702		Y	Y	Alpha	0	2863		JO	
				Beta	316	4349			
0617 100902		YES	YES	Alpha	0	2965		[illegible]	
				Beta	344	3784			
0620 101002		YES	YES	Alpha	4	2731		[illegible]	
				Beta	304	4289			
0620 101102		YES	YES	Alpha	2	2865		[illegible]	
				Beta	322	4367			
0612 101402		YES	YES	Alpha	0	~~3110~~ 2817		[illegible]	
				Beta	312	10402 4400			
0600 101502		Y	Y	Alpha	4	2802		JO	
				Beta	313	4367			
N/A		NA	NA	Alpha	NA	NA		NA	
				Beta					
				Alpha					
				Beta					
N/A	NA	NA	NA	Alpha				NA	NA
				Beta	NA	NA			

Rev 04/01 Page 1 * Guidance for use of this form is located on the back of the form

408

PORTABLE SCALER CONTAMINATION INSTRUMENT PERFORMANCE TEST LOG RSFORMS-02.01-04

SOURCE ISOTOPE (Alpha): Pu 239 (CSL)/(S/N)/(Registry No.): 603557 Certification/Decay Chart Date: 9-17-02
(Circle One) (Circle One)

Source (dpm): 15023 Range (cpm) ± 20%: 2632 — 3948

SOURCE ISOTOPE (Beta): Sr-90 (CSL)/(S/N)/(Registry No.): 604432 Certification/Decay Chart Date: 9-6-02
(Circle One)

Source (dpm): 14332 Range (cpm) ± 20%: 3446 — 5168

Approved by: RS Supervision:			
James W Smith	James W Smith	[redacted]	10-15-02
Name (print)	Signature		Date

$$\%Error = \frac{(Net\ cpm \div eff) - Source\ dpm}{Source\ dpm} \times (100)$$

Where Net cpm = Source cpm - Background cpm

GUIDANCE:

- The appropriate instrument data and building location is recorded on RSFORMS-02.01-04.
- Obtain an appropriate certified source or decay chart source for the instrument being tested.
- A general inspection is performed on the instrument for the following:
  - * Physical condition of the detector, cables, and instrument
  - * Instrument battery/power supply check is satisfactory
  - * Instrument audio check is satisfactory, as applicable
  - * Instrument light leak check is satisfactory, as applicable
  - * Instrument background response check is within tolerances of expected values (typically 1 minute count)
  - * Instrument corrected source count reading falls within an acceptable range (± 20% of source value typically using a 1 minute count)
- Performance test data is recorded (as applicable) to each portable contamination survey instrument with signature upon completion.

PORTABLE SCALER CONTAMINATION INSTRUMENT PERFORMANCE TEST LOG

RSFORMS-02.01-04

INST. TYPE/SERIAL #: NE Electra 2344 CAL. DUE DATE: 1·1703 INSTRUMENT EFFICIENCY: Alpha 21.9 Beta 133.1

PROBE S/N: 1876 BLDG. T-130-1

This form is used to record parameters noted during daily performance checks on NE Electra, Bicron Frisk-Tech, Portable instruments with gas proportional detector. Instruments that require additional repair or service are returned to Instrumentation Repair Facility.

TIME/ DATE	RCT NAME/EMP #	IN CAL Yes No	BATT SAT Yes No	COUNT TYPE	BKG (cpm)	INSTRUMENT READING (Net cpm)	FLUSH/RE-CHARGE (N/A if not gas prop. det.) (Initials)	% ERROR ±20% IN TOL (Initials)	RCT SIGNATURE
0730 9·5·02	[redacted]	Y	Y	Alpha	1	3138	NA	JB	[redacted]
				Beta	407	4887			
610 9/6/02		Y	Y	Alpha	1	3248		F	
				Beta	413	4833			
NA		NA	NA	Alpha	NA	NA		NA	
				Beta					
				Alpha					
				Beta					
				Alpha					
				Beta					
				Alpha					
				Beta					
				Alpha					
				Beta					
				Alpha					
				Beta					
				Alpha					
				Beta					
				Alpha					
				Beta					
				Alpha					
				Beta					
				Alpha					
				Beta					
				Alpha					
				Beta					
NA	NA	NA	NA	Alpha	NA	NA	NA	NA	NA
				Beta	NA	NA			

410

PORTABLE SCALER CONTAMINATION INSTRUMENT PERFORMANCE TEST LOG RSFORMS-02.01-04

SOURCE ISOTOPE (Alpha): P_u-239 (CSL)/(S/N)/(Registry No.): 603577 Certification/Decay Chart Date: 1-22-02
(Circle One) (Circle One)

Source (dpm): 17529 Range (cpm) ± 20%: 3071 – 4607

SOURCE ISOTOPE (Beta): Sr-90 (CSL)/(S/N)/(Registry No.): 604432 Certification/Decay Chart Date: 1-22-02
(Circle One)

Source (dpm): 18715 Range (cpm) ± 20%: 4823 – 7235

Approved by:
RS Supervision: [redacted]
Name (print) Signature Date 1/24/02

$$\%Error = \frac{(Net\ cpm + eff) - Source\ dpm}{Source\ dpm} \times (100)$$

Where Net cpm = Source cpm - Background cpm

GUIDANCE:

- The appropriate instrument data and building location is recorded on RSFORMS-02.01-04.
- Obtain an appropriate certified source or decay chart source for the instrument being tested.
- A general inspection is performed on the instrument for the following:
  - Physical condition of the detector, cables, and instrument
  - Instrument battery/power supply check is satisfactory
  - Instrument audio check is satisfactory, as applicable
  - Instrument light leak check is satisfactory, as applicable
  - Instrument background response check is within tolerances of expected values (typically 1 minute count)
  - Instrument corrected source count reading falls within an acceptable range (± 20% of source value typically using a 1 minute count)
- Performance test data is recorded (as applicable) to each portable contamination survey instrument with signature upon completion.

411

PORTABLE SCALER CONTAMINATION INSTRUMENT PERFORMANCE TEST LOG

RSFORMS-02.01

INST. TYPE/SERIAL #: NE Electra 1256 CAL. DUE DATE: 11-07-02 INSTRUMENT EFFICIENCY: Alpha 22.9 Beta 32.2

PROBE S/N: 1032 BLDG. 130-I

This form is used to record parameters noted during daily performance checks on NE Electra, Bicron Frisk-Tech, Portable instruments with gas proportional detector. Instruments that require additional repair or service are returned to Instrumentation Repair Facility.

TIME/ DATE	RCT NAME/EMP #	IN CAL Yes No	BATT SAT Yes No	COUNT TYPE	BKG (cpm)	INSTRUMENT READING (Net cpm)	FLUSH/RE-CHARGE (N/A if not gas prop. det.) (Initials)	% ERROR ±20% IN TOL (Initials)	RCT SIGNATURE
0715 9-3-02	[redacted]	Y	Y	Alpha	5.0	4975	NA	[redacted]	[redacted]
				Beta	408	6027			
9/4/02		Y	Y	Alpha	4.0	5012		SP	
				Beta	432	5810			
9/5/02		Y	Y	Alpha	2.0	4930		[illegible]	
				Beta	389	5830			
9/5/02		Y	Y	Alpha	7.0	5056		[illegible]	
				Beta	398	5930			
9/6/02		Y	Y	Alpha	7.0	4990		[illegible]	
620				Beta	423	5860			
9/8/02		Y	Y	Alpha	7.0	4890		AKC	
				Beta	366	5988			
N/A		N/A	N/A	Alpha	N/A	N/A		N/A	
				Beta					
				Alpha					
				Beta					
				Alpha					
				Beta					
				Alpha					
				Beta					
				Alpha					
				Beta					
				Alpha					
				Beta					
N/A	N/A	N/A	N/A	Alpha			NA	N/A	N/A
				Beta	N/A	N/A			

 * Guidance for use of this form is located on the back of the form

4/2

SOURCE ISOTOPE (Alpha): Pu 239 (CSL)/(S/N)/(Registry No.): 604632 Certification/Decay Chart Date: 4-25-02
(Circle One) (Circle One)

Source (dpm): 22967 Range (cpm) ± 20%: 4207 - 6311

SOURCE ISOTOPE (Beta): Sr/Y 90 (CSL)/(S/N)/(Registry No.): 603927 Certification/Decay Chart Date: 1-4-02
(Circle One)

Source (dpm): 21170 Range (cpm) ± 20%: 5454 - 8180

Approved by: RS Supervision:		[redacted]	
Name (print)	Signature		Date

$$\%Error = \frac{(Net\ cpm + eff) - Source\ dpm}{Source\ dpm} \times (100)$$

Where Net cpm = Source cpm - Background cpm

GUIDANCE:

- The appropriate instrument data and building location is recorded on RSFORMS-02.01-04.
- Obtain an appropriate certified source or decay chart source for the instrument being tested.
- A general inspection is performed on the instrument for the following:
  - Physical condition of the detector, cables, and instrument
  - Instrument battery/power supply check is satisfactory
  - Instrument audio check is satisfactory, as applicable
  - Instrument light leak check is satisfactory, as applicable
  - Instrument background response check is within tolerances of expected values (typically 1 minute count)
  - Instrument corrected source count reading falls within an acceptable range (± 20% of source value typically using a 1 minute count)
- Performance test data is recorded (as applicable) to each portable contamination survey instrument with signature upon completion.

PORTABLE SCALER CONTAMINATION INSTRUMENT PERFORMANCE TEST LOG RSFORMS-02.01-04

INST. TYPE/SERIAL #: NE Electra 3107 CAL. DUE DATE: 2.5.03 INSTRUMENT EFFICIENCY: Alpha 21.3 Beta 129.4

PROBE S/N: 1911 BLDG. T130 1

This form is used to record parameters noted during daily performance checks on NE Electra, Bicron Frisk-Tech, Portable instruments with gas proportional detector. Instruments that require additional repair or service are returned to Instrumentation Repair Facility.

TIME/ DATE	RCT NAME/EMP #	IN CAL Yes No	BATT SAT Yes No	COUNT TYPE	BKG (cpm)	INSTRUMENT READING (Net cpm)	FLUSH/RE-CHARGE (N/A if not gas prop. det.) (Initials)	% ERROR ± 20% IN TOL (Initials)	RCT SIGNATURE
0616 09-03-02	[redacted]	Y	Y	Alpha	3	3233	NA	~	[redacted]
				Beta	451	4452			
0610 9.4.02		Y	Y	Alpha	1	3207		JB	
				Beta	347	4405			
0630 09/05/02		Yes	Yes	Alpha	1	3171			
				Beta	355				
NA		NA	NA	Alpha	NA	NA		NA	
				Beta					
				Alpha					
				Beta					
				Alpha					
				Beta					
				Alpha					
				Beta					
				Alpha					
				Beta					
				Alpha					
				Beta					
				Alpha					
				Beta					
				Alpha					
				Beta					
				Alpha					
				Beta					
				Alpha					
				Beta					
				Alpha					
				Beta					
				Alpha			NA		
				Beta					

4/14

SOURCE ISOTOPE (Alpha): Pu 239 (CSL)/(S/N)/(Registry No.): 603577 Certification/Decay Chart Date: 1-22-07
(Circle One) (Circle One)

Source (dpm): 17529 Range (cpm) ± 20%: 2987 — 4480

SOURCE ISOTOPE (Beta): Sr-90 (CSL)/(S/N)/(Registry No.): 604432 Certification/Decay Chart Date: 1-22-02
(Circle One) (Circle One)

Source (dpm): 18215 Range (cpm) ± 20%: 3284 — 6426

Approved by:
RS Supervision: [redacted] / [redacted] / [redacted] 9-8-02
Name (print) Signature E Date

$$\%Error = \frac{(Net\ cpm + eff) - Source\ dpm}{Source\ dpm} \times (100)$$

Where Net cpm = Source cpm - Background cpm

GUIDANCE:

- The appropriate instrument data and building location is recorded on RSFORMS-02.01-04.
- Obtain an appropriate certified source or decay chart source for the instrument being tested.
- A general inspection is performed on the instrument for the following:
  - Physical condition of the detector, cables, and instrument
  - Instrument battery/power supply check is satisfactory
  - Instrument audio check is satisfactory, as applicable
  - Instrument light leak check is satisfactory, as applicable
  - Instrument background response check is within tolerances of expected values (typically 1 minute count)
  - Instrument corrected source count reading falls within an acceptable range (± 20% of source value typically using a 1 minute count)
- Performance test data is recorded (as applicable) to each portable contamination survey instrument with signature upon completion.

4/15

PORTABLE SCALER CONTAMINATION INSTRUMENT PERFORMANCE TEST LOG RSFORMS-02.01-04

INST. TYPE/SERIAL #: 2404 NE Electra CAL. DUE DATE: 9-7-02 INSTRUMENT EFFICIENCY: Alpha 23.0 / Beta 31.0

PROBE S/N: 1912 BLDG. 130 I

This form is used to record parameters noted during daily performance checks on NE Electra, Bicron Frisk-Tech, Portable instruments with gas proportional detector. Instruments that require additional repair or service are returned to Instrumentation Repair Facility.

TIME/ DATE	RCT NAME/EMP #	IN CAL Yes No	BATT SAT Yes No	COUNT TYPE	BKG (cpm)	INSTRUMENT READING (Net cpm)	FLUSH/RE-CHARGE (N/A if not gas prop. det.) (Initials)	% ERROR ± 20% IN TOL (Initials)	RCT SIGNATURE
0615 9.3.02	[redacted]	Y	Y	Alpha	0	3352	NA	JB	[redacted]
				Beta	360	5249			
0610 9.4.02		Y	Y	Alpha	3	3372		JB	
				Beta	398	5278			
NA		NA	NA	Alpha	NA	NA		NA	
				Beta					
				Alpha					
				Beta					
				Alpha					
				Beta					
				Alpha					
				Beta					
				Alpha					
				Beta					
				Alpha					
				Beta					
				Alpha					
				Beta					
				Alpha					
				Beta					
				Alpha					
				Beta					
				Alpha					
				Beta					
				Alpha					
				Beta			NA		

 * Guidance for use of this form is located on the back of the form

4/16

PORTABLE SCALER CONTAMINATION INSTRUMENT PERFORMANCE TEST LOG RSFORMS-02.01-04

SOURCE ISOTOPE (Alpha): Pu 239 (CSL)/(S/N)/(Registry No.): 603577 Certification/Decay Chart Date: 1·22·02
(Circle One) (Circle One)

Source (dpm): 17529 Range (cpm) ± 20%: 3225 – 4838

SOURCE ISOTOPE (Beta): Sr - 90 (CSL)/(S/N)/(Registry No.): 604432 Certification/Decay Chart Date: 1·22·02
(Circle One) (Circle One)

Source (dpm): 18215 Range (cpm) ± 20%: 4517 – 6776

Approved by:
RS Supervision: [redacted] 1-8-02
Name (print) Signature Date

$$\%Error = \frac{(Net\ cpm + eff) - Source\ dpm}{Source\ dpm} \times (100)$$

Where Net cpm = Source cpm - Background cpm

GUIDANCE:

- The appropriate instrument data and building location is recorded on RSFORMS-02.01-04.
- Obtain an appropriate certified source or decay chart source for the instrument being tested.
- A general inspection is performed on the instrument for the following:
  - Physical condition of the detector, cables, and instrument
  - Instrument battery/power supply check is satisfactory
  - Instrument audio check is satisfactory, as applicable
  - Instrument light leak check is satisfactory, as applicable
  - Instrument background response check is within tolerances of expected values (typically 1 minute count)
  - Instrument corrected source count reading falls within an acceptable range (± 20% of source value typically using a 1 minute count)
- Performance test data is recorded (as applicable) to each portable contamination survey instrument with signature upon completion.

4/17

PORTABLE SCALER CONTAMINATION INSTRUMENT PERFORMANCE TEST LOG RSFORMS-02.01-04

INST. TYPE/SERIAL #: NE Electra 3104 CAL. DUE DATE: 2·1·03 INSTRUMENT EFFICIENCY: Alpha 21.4 Beta 108.4

PROBE S/N: 1951 BLDG. T130

This form is used to record parameters noted during daily performance checks on NE Electra, Bicron Frisk-Tech, Portable instruments with gas proportional detector. Instruments that require additional repair or service are returned to Instrumentation Repair Facility.

TIME/ DATE	RCT NAME/EMP #	IN CAL Yes No	BATT SAT Yes No	COUNT TYPE	BKG (cpm)	INSTRUMENT READING (Net cpm)	FLUSH/RE-CHARGE (N/A if not gas prop. det.) (Initials)	% ERROR ±20% IN TOL (Initials)	RCT SIGNATURE
0620 09·3·02	[redacted]	Y	Y	Alpha	6	3264	NA	JB	[redacted]
				Beta	459	4258			
0610 9·4·02		Y	Y	Alpha	3	3142		JB	
				Beta	321	4276			
0611 09·5·02		YES	YES	Alpha	2	3253		BKG	
				Beta	340	NA			
NA		NA	NA	Alpha	NA			NA	
				Beta					
				Alpha					
				Beta					
				Alpha					
				Beta					
				Alpha					
				Beta					
				Alpha					
				Beta					
				Alpha					
				Beta					
				Alpha					
				Beta					
				Alpha					
				Beta					
				Alpha					
				Beta					
				Alpha					
				Beta					
NA	NA	NA	NA	Alpha			NA	NA	NA
				Beta	NA	NA			

BKG 09/05/02

Rev 04/01

* Guidance for use of this form is located on the back of the form

1/8

PORTABLE SCALER CONTAMINATION INSTRUMENT PERFORMANCE TEST LOG RSFORMS-02.01-04

SOURCE ISOTOPE (Alpha): Pu 239 (CSL)/(S/N)/(Registry No.): 603577 Certification/Decay Chart Date: 1-22-02
(Circle One) (Circle One)

Source (dpm): 17529 Range (cpm) ± 20%: 3001 — 4501

SOURCE ISOTOPE (Beta): Sr - 90 (CSL)/(S/N)/(Registry No.): 604432 Certification/Decay Chart Date: 1-22-02
(Circle One) (Circle One)

Source (dpm): 18215 Range (cpm) ± 20%: 4138 — 6208

Approved by:
RS Supervision: [redacted]
Name (print) Signature Date

$$\%Error = \frac{(Net\ cpm + eff) - Source\ dpm}{Source\ dpm} \times (100)$$

Where Net cpm = Source cpm - Background cpm

GUIDANCE:

- The appropriate instrument data and building location is recorded on RSFORMS-02.01-04.
- Obtain an appropriate certified source or decay chart source for the instrument being tested.
- A general inspection is performed on the instrument for the following:
  - Physical condition of the detector, cables, and instrument
  - Instrument battery/power supply check is satisfactory
  - Instrument audio check is satisfactory, as applicable
  - Instrument light leak check is satisfactory, as applicable
  - Instrument background response check is within tolerances of expected values (typically 1 minute count)
  - Instrument corrected source count reading falls within an acceptable range (± 20% of source value typically using a 1 minute count)
- Performance test data is recorded (as applicable) to each portable contamination survey instrument with signature upon completion.

4/9

PORTABLE SCALER CONTAMINATION INSTRUMENT PERFORMANCE TEST LOG

RSFORMS-02.01

INST. TYPE/SERIAL #: NE Electra 1388 CAL. DUE DATE: 1/29/03 INSTRUMENT EFFICIENCY: Alpha 21.9 Beta 131.2

PROBE S/N: 1244 BLDG. T130-I

This form is used to record parameters noted during daily performance checks on NE Electra, Bicron Frisk-Tech, Portable instruments with gas proportional detector. Instruments that require additional repair or service are returned to Instrumentation Repair Facility.

TIME/ DATE	RCT NAME/EMP #	IN CAL Yes No	BATT SAT Yes No	COUNT TYPE	BKG (cpm)	INSTRUMENT READING (Net cpm)	FLUSH/RE-CHARGE (N/A if not gas prop. det.) (Initials)	% ERROR ±20% IN TOL (Initials)	RCT SIGNATURE
0630 9-8-02	[redacted]	YES	YES	Alpha	4	3150	NA	JD	[redacted]
				Beta	394	4453			
0600 9.9.02		Y	Y	Alpha	1	3332		JM	
				Beta	377	4664			
NA		NA	NA	Alpha	2	NA		NA	
				Beta	389				
				Alpha	NA				
				Beta					
				Alpha					
				Beta					
				Alpha					
				Beta					
				Alpha					
				Beta					
				Alpha					
				Beta					
				Alpha					
				Beta					
				Alpha					
				Beta					
				Alpha					
				Beta					
				Alpha					
				Beta					
				Alpha					
				Beta					
				Alpha					
				Beta					

 * Guidance for use of this form is located on the back of the form

400

P TABLE SCALER CONTAMINATION INSTRUMEN ERFORMANCE TEST LOG RSFORMS-02.0 4

SOURCE ISOTOPE (Alpha): Pu239 (CSL)/(S/N)/(Registry No.): 603577 (Circle One) Certification/Decay Chart Date: 1-22-02 (Circle One)

Source (dpm): 17529 Range (cpm) ± 20%: 3071-4607

SOURCE ISOTOPE (Beta): Sr/Y 90 (CSL)/(S/N)/(Registry No.): 604432 Certification/Decay Chart Date: 9-6-02 (Circle One)

Source (dpm): 14332 Range (cpm) ± 20%: 3577-5366

Approved by:
RS Supervision: [signature] [signature] [redacted] 1/22/02

Name (print) Signature Date

$$\%Error = \frac{(Net\ cpm + eff) - Source\ dpm}{Source\ dpm} \times (100)$$

Where Net cpm = Source cpm - Background cpm

GUIDANCE:

- The appropriate instrument data and building location is recorded on RSFORMS-02.01-04.
- Obtain an appropriate certified source or decay chart source for the instrument being tested.
- A general inspection is performed on the instrument for the following:
  - Physical condition of the detector, cables, and instrument
  - Instrument battery/power supply check is satisfactory
  - Instrument audio check is satisfactory, as applicable
  - Instrument light leak check is satisfactory, as applicable
  - Instrument background response check is within tolerances of expected values (typically 1 minute count)
  - Instrument corrected source count reading falls within an acceptable range (± 20% of source value typically using a 1 minute count)
- Performance test data is recorded (as applicable) to each portable contamination survey instrument with signature upon completion.

421

PORTABLE SCALER CONTAMINATION INSTRUMENT PERFORMANCE TEST LOG RSFORMS-02.01-04

INST. TYPE/SERIAL #: NE Electra 3104 CAL. DUE DATE: 2-703 INSTRUMENT EFFICIENCY: Alpha 21.4 Beta 28.4

PROBE S/N: 1957 BLDG. T130I

This form is used to record parameters noted during daily performance checks on NE Electra, Bicron Frisk-Tech, Portable instruments with gas proportional detector. Instruments that require additional repair or service are returned to Instrumentation Repair Facility.

TIME/ DATE	RCT NAME/EMP #	IN CAL Yes No	BATT SAT Yes No	COUNT TYPE	BKG (cpm)	INSTRUMENT READING (Net cpm)	FLUSH/RE-CHARGE (N/A if not gas prop. det.) (Initials)	% ERROR ±20% IN TOL (Initials)	RCT SIGNATURE
0630 9-8-02	[redacted]	Yes	Yes	Alpha	1.0	3140	NA	[redacted]	[redacted]
				Beta	330	4397			
0600 9-9-02		Y	Y	Alpha	0	3168			
				Beta	274	3913			
0630 9-10-02		Y	Y	Alpha	1	3005			
				Beta	284	4147			
0630 9-10-02		Y	Y	Alpha	1	3163			
				Beta	299	4090			
0600 9/6/02		Y	Y	Alpha	1	3120			
				Beta	313	3724			
NA		NA	NA	Alpha	NA	NA		NA	
				Beta					
				Alpha					
				Beta					
				Alpha					
				Beta					
				Alpha					
				Beta					
				Alpha					
				Beta					
				Alpha					
				Beta					
				Alpha					
				Beta					
				Alpha					
				Beta					
				Alpha					
				Beta					
				Alpha					
				Beta					

PORTABLE SCALER CONTAMINATION INSTRUMENT PERFORMANCE TEST LOG RSFORMS-02.01-04

SOURCE ISOTOPE (Alpha): Pu239 (CSL)/(S/N)/(Registry No.): 603577 Certification/Decay Chart Date: 1/22/2002
(Circle One) (Circle One)

Source (dpm): 17529 Range (cpm) ± 20%: 3001 - 4501

SOURCE ISOTOPE (Beta): SR90 (CSL)/(S/N)/(Registry No.): 604432 Certification/Decay Chart Date: 9-6-02
(Circle One)

Source (dpm): 14332 Range (cpm) ± 20%: 3256 - 4884

Approved by:
RS Supervision: [redacted]
Name (print) Signature Date

$$\%Error = \frac{(Net\ cpm + eff) - Source\ dpm}{Source\ dpm} \times (100)$$

Where Net cpm = Source cpm - Background cpm

GUIDANCE:

- The appropriate instrument data and building location is recorded on RSFORMS-02.01-04.
- Obtain an appropriate certified source or decay chart source for the instrument being tested.
- A general inspection is performed on the instrument for the following:
  - Physical condition of the detector, cables, and instrument
  - Instrument battery/power supply check is satisfactory
  - Instrument audio check is satisfactory, as applicable
  - Instrument light leak check is satisfactory, as applicable
  - Instrument background response check is within tolerances of expected values (typically 1 minute count)
  - Instrument corrected source count reading falls within an acceptable range (± 20% of source value typically using a 1 minute count)
- Performance test data is recorded (as applicable) to each portable contamination survey instrument with signature upon completion.

PORTABLE SCALER CONTAMINATION INSTRUMENT PERFORMANCE TEST LOG RSFORMS-02.01-04

INST. TYPE/SERIAL #: NE / 1445 CAL. DUE DATE: 2-22-03 INSTRUMENT EFFICIENCY: Alpha 22.3 / Beta 33.1

PROBE S/N: 1312 BLDG. T130 I

This form is used to record parameters noted during daily performance checks on NE Electra, Bicron Frisk-Tech, Portable instruments with gas proportional detector. Instruments that require additional repair or service are returned to Instrumentation Repair Facility.

TIME/ DATE	RCT NAME/EMP #	IN CAL Yes No	BATT SAT Yes No	COUNT TYPE	BKG (cpm)	INSTRUMENT READING (Net cpm)	FLUSH/RE-CHARGE (N/A if not gas prop. det.) (Initials)	% ERROR ±20% IN TOL (Initials)	RCT SIGNATURE
0625 7.5.02	[redacted]	Y	Y	Alpha	2	3239	NA	YM.	[redacted]
				Beta	428	5278			
0630 9-10-02		Y	Y	Alpha	2	3403		JR	
				Beta	325	4899			
0619 09/11		YES	YES	Alpha	7	3316		RS	
				Beta	397	5260			
NA		NA	NA	Alpha	NA	NA			
				Beta				NA	
				Alpha					
				Beta					
				Alpha					
				Beta					
				Alpha					
				Beta					
				Alpha					
				Beta					
				Alpha					
				Beta					
				Alpha					
				Beta					
				Alpha					
				Beta					
				Alpha					
				Beta					
				Alpha					
				Beta					
NA	NA	NA	NA	Alpha					
				Beta	NA	NA	N/A	NA	NA

 * Guidance for use of this form is located on the back of the form

424

PORTABLE SCALER CONTAMINATION INSTRUMENT PERFORMANCE TEST LOG RSFORMS-02.01-04

SOURCE ISOTOPE (Alpha): Pu 239 (CSL)/(S/N)/(Registry No.): 603577 Certification/Decay Chart Date: 1-22-02
(Circle One) (Circle One)

Source (dpm): 17 529 Range (cpm) ± 20%: 3127 - 4691

SOURCE ISOTOPE (Beta): Sr-90 (CSL)/(S/N)/(Registry No.): 604432 Certification/Decay Chart Date: 1-22-02
(Circle One)

Source (dpm): 14332 Range (cpm) ± 20%: 3795 - 5693

Approved by:
RS Supervision: [redacted] 8/24/02
Name (print) Signature Date

$$\%Error = \frac{(Net\ cpm + eff) - Source\ dpm}{Source\ dpm} \times (100)$$

Where Net cpm = Source cpm - Background cpm

GUIDANCE:

- The appropriate instrument data and building location is recorded on RSFORMS-02.01-04.
- Obtain an appropriate certified source or decay chart source for the instrument being tested.
- A general inspection is performed on the instrument for the following:
  - Physical condition of the detector, cables, and instrument
  - Instrument battery/power supply check is satisfactory
  - Instrument audio check is satisfactory, as applicable
  - Instrument light leak check is satisfactory, as applicable
  - Instrument background response check is within tolerances of expected values (typically 1 minute count)
  - Instrument corrected source count reading falls within an acceptable range (± 20% of source value typically using a 1 minute count)
- Performance test data is recorded (as applicable) to each portable contamination survey instrument with signature upon completion.

425

PORTABLE SCALER CONTAMINATION INSTRUMENT PERFORMANCE TEST LOG RSFORMS-02.01-04

INST. TYPE/SERIAL #: NE 3114 CAL. DUE DATE: 3.5.02 (0.3) INSTRUMENT EFFICIENCY: Alpha 22.2 / Beta 30.2

PROBE S/N: 1967 BLDG. 130T

This form is used to record parameters noted during daily performance checks on NE Electra, Bicron Frisk-Tech, Portable instruments with gas proportional detector. Instruments that require additional repair or service are returned to Instrumentation Repair Facility.

TIME/ DATE	RCT NAME/EMP #	IN CAL Yes No	BATT SAT Yes No	COUNT TYPE	BKG (cpm)	INSTRUMENT READING (Net cpm)	FLUSH/RE-CHARGE (N/A if not gas prop. det.) (Initials)	% ERROR ±20% IN TOL (Initials)	RCT SIGNATURE
09.902 0610	[redacted]	Y	Y	Alpha	6.0	3216	NA	M.	[redacted]
				Beta	361	3654			
9-10-02 0630		Y	Y	Alpha	2	3149		JJO	
				Beta	351	4490			
9-10-02 0630		Y	Y	Alpha	2	3287		JJO	
				Beta	333	4458			
9/11/02 0650		Y	Y	Alpha	3	3219		F	
				Beta	400	4740			
0626-0913021		YES	YES	Alpha	4	3231		BFF	
				Beta	358	5000			
0615 0915		Y	Y	Alpha	1	3353		JJO	
				Beta	379	4165			
NA		NA	NA	Alpha	NA	NA		NA	
				Beta					
				Alpha					
				Beta					
				Alpha					
				Beta					
				Alpha					
				Beta					
				Alpha					
				Beta					
				Alpha					
				Beta					
				Alpha					
				Beta					
				Alpha					
				Beta					

Rev 04/01

* Guidance for use of this form is located on the back of the form

PORTABLE SCALER CONTAMINATION INSTRUMENT PERFORMANCE TEST LOG RSFORMS-02.01-04

SOURCE ISOTOPE (Alpha): Pu239 (CSL)/(S/N)/(Registry No.): 603577 Certification/Decay Chart Date: 1.22.02
(Circle One) (Circle One)

Source (dpm): 17529 Range (cpm) ± 20%: 3113 - 4670

SOURCE ISOTOPE (Beta): SR-90 (CSL)/(S/N)/(Registry No.): 604432 Certification/Decay Chart Date: 9.6.02
(Circle One) (Circle One)

Source (dpm): 14332 Range (cpm) ± 20%: 3463 - 5194

Approved by:
RS Supervision: Sleyman [redacted] 1.5.24.02
Name (print) Signature Date

$$\%Error = \frac{(Net\ cpm + eff) - Source\ dpm}{Source\ dpm} \times (100)$$

Where Net cpm = Source cpm - Background cpm

GUIDANCE:

- The appropriate instrument data and building location is recorded on RSFORMS-02.01-04.
- Obtain an appropriate certified source or decay chart source for the instrument being tested.
- A general inspection is performed on the instrument for the following:
  - Physical condition of the detector, cables, and instrument
  - Instrument battery/power supply check is satisfactory
  - Instrument audio check is satisfactory, as applicable
  - Instrument light leak check is satisfactory, as applicable
  - Instrument background response check is within tolerances of expected values (typically 1 minute count)
  - Instrument corrected source count reading falls within an acceptable range (± 20% of source value typically using a 1 minute count)
- Performance test data is recorded (as applicable) to each portable contamination survey instrument with signature upon completion.

427

PORTABLE SCALER CONTAMINATION INSTRUMENT PERFORMANCE TEST LOG

RSFORMS-02.01

INST. TYPE/SERIAL #: NE Electra 3107 CAL. DUE DATE: ~~8-5-02~~ 2-5-03 (JD) INSTRUMENT EFFICIENCY: Alpha 21.3 / Beta 29.4

PROBE S/N: 1911 BLDG. T130T

This form is used to record parameters noted during daily performance checks on NE Electra, Bicron Frisk-Tech, Portable instruments with gas proportional detector. Instruments that require additional repair or service are returned to Instrumentation Repair Facility.

TIME/ DATE	RCT NAME/EMP #	IN CAL Yes No	BATT SAT Yes No	COUNT TYPE	BKG (cpm)	INSTRUMENT READING (Net cpm)	FLUSH/RE-CHARGE (N/A if not gas prop. det.) (Initials)	% ERROR ± 20% IN TOL (Initials)	RCT SIGNATURE
0630 9-8-02	[redacted]	Yes	Yes	Alpha	3	3078	NA	JD	[redacted]
				Beta	323	4731			
0605 9.9.02		Y	Y	Alpha	1	3133			
				Beta	299	4459			
0630 9-10-02		Y	Y	Alpha	1	3104		JD	
				Beta	304	4300			
NA		NA	NA	Alpha	3	NA		NA	
				Beta	353				
				Alpha	NA				
				Beta					
				Alpha					
				Beta					
				Alpha					
				Beta					
				Alpha					
				Beta					
				Alpha					
				Beta					
				Alpha					
				Beta					
				Alpha					
				Beta					
				Alpha					
				Beta					
				Alpha					
				Beta					
				Alpha					
				Beta					

 * Guidance for use of this form is located on the back of the form

28

SOURCE ISOTOPE (Alpha): Pu239 (CSL)/(S/N)/(Registry No.): 603577 Certification/Decay Chart Date: 1/22/2002
(Circle One) (Circle One)

Source (dpm): 17529 Range (cpm) ± 20%: 2987 – 4480

SOURCE ISOTOPE (Beta): Sr-90 (CSL)/(S/N)/(Registry No.): TS2859 604432 Certification/Decay Chart Date: 9-6-02
(Circle One)

Source (dpm): 14332 Range (cpm) ± 20%: ~~4214~~ JD 3371 – 5056

Approved by:
RS Supervision: [redacted] 9-24-02
Name (print) Signature Date

$$\%Error = \frac{(Net\ cpm + eff) - Source\ dpm}{Source\ dpm} \times (100)$$

Where Net cpm = Source cpm - Background cpm

GUIDANCE:

- The appropriate instrument data and building location is recorded on RSFORMS-02.01-04.
- Obtain an appropriate certified source or decay chart source for the instrument being tested.
- A general inspection is performed on the instrument for the following:
  - Physical condition of the detector, cables, and instrument
  - Instrument battery/power supply check is satisfactory
  - Instrument audio check is satisfactory, as applicable
  - Instrument light leak check is satisfactory, as applicable
  - Instrument background response check is within tolerances of expected values (typically 1 minute count)
  - Instrument corrected source count reading falls within an acceptable range (± 20% of source value typically using a 1 minute count)
- Performance test data is recorded (as applicable) to each portable contamination survey instrument with signature upon completion.

I[redacted]TABLE SCALER CONTAMINATION INSTRUMENT[redacted]RFORMANCE TEST LOG RSFORMS-02.01-[redacted]

INST. TYPE/SERIAL #: RECTRA 1136 CAL. DUE DATE: 010103 INSTRUMENT EFFICIENCY: Alpha 22.7% / Beta 31.6%

PROBE S/N: 796 BLDG. T130J

This form is used to record parameters noted during daily performance checks on NE Electra, Bicron Frisk-Tech, Portable instruments with gas proportional detector. Instruments that require additional repair or service are returned to Instrumentation Repair Facility.

TIME/ DATE	RCT NAME/EMP #	IN CAL Yes No	BATT SAT Yes No	COUNT TYPE	BKG (cpm)	INSTRUMENT READING (Net cpm)	FLUSH/RE-CHARGE (N/A if not gas prop. det.) (Initials)	% ERROR ± 20% IN TOL (Initials)	RCT SIGNATURE
0905 08260Z	[redacted]	Yes	Yes	Alpha	3	3153	NA	[redacted]	[redacted]
				Beta	400	4743			
0610 08270Z		Yes	Yes	Alpha	3	3240		SP	
				Beta	373	4817			
0605 8-28-02		Y	Y	Alpha	1	3340		M	
				Beta	371	4752			
NA		NA	NA	Alpha	NA	NA		NA	
				Beta					
				Alpha					
				Beta					
				Alpha					
				Beta					
				Alpha					
				Beta					
				Alpha					
				Beta					
				Alpha					
				Beta					
				Alpha					
				Beta					
				Alpha					
				Beta					
				Alpha					
				Beta					
				Alpha					
				Beta					
				Alpha					
				Beta					
NA	NA	NA	NA	Alpha	✓	✓	NA	NA	NA
				Beta	NA	NA			

 * Guidance for use of this form is located on the back of the form

430

PORTABLE SCALER CONTAMINATION INSTRUMENT PERFORMANCE TEST LOG RSFORMS-02.01-04

SOURCE ISOTOPE (Alpha): Pu 239 (CSL)/(S/N)/(Registry No.): 603577 Certification/Decay Chart Date: 01 22 02
(Circle One) (Circle One)

Source (dpm): 17529 Range (cpm) ± 20%: 3183 - 4775

SOURCE ISOTOPE (Beta): Sr-90 (CSL)/(S/N)/(Registry No.): 604432 Certification/Decay Chart Date: 01 22 02
(Circle One)

Source (dpm): 18253 Range (cpm) ± 20%: 4614 - 6922

Approved by: RS Supervision:			
Name (print)	Signature	[redacted]	Date

$$\%Error = \frac{(Net\ cpm + eff) - Source\ dpm}{Source\ dpm} \times (100)$$

Where Net cpm = Source cpm - Background cpm

GUIDANCE:

- The appropriate instrument data and building location is recorded on RSFORMS-02.01-04.
- Obtain an appropriate certified source or decay chart source for the instrument being tested.
- A general inspection is performed on the instrument for the following:
  - Physical condition of the detector, cables, and instrument
  - Instrument battery/power supply check is satisfactory
  - Instrument audio check is satisfactory, as applicable
  - Instrument light leak check is satisfactory, as applicable
  - Instrument background response check is within tolerances of expected values (typically 1 minute count)
  - Instrument corrected source count reading falls within an acceptable range (± 20% of source value typically using a 1 minute count)
- Performance test data is recorded (as applicable) to each portable contamination survey instrument with signature upon completion.

PORTABLE SCALER CONTAMINATION INSTRUMENT PERFORMANCE TEST LOG RSFORMS-02.01-0

INST. TYPE/SERIAL #: Ne Electra 1833 CAL. DUE DATE: 10/03/02 INSTRUMENT EFFICIENCY: Alpha 22.9 / Beta 30.4

PROBE S/N: 1532 BLDG. T130I

This form is used to record parameters noted during daily performance checks on NE Electra, Bicron Frisk-Tech, Portable instruments with gas proportional detector. Instruments that require additional repair or service are returned to Instrumentation Repair Facility.

TIME/ DATE	RCT NAME/EMP #	IN CAL Yes No	BATT SAT Yes No	COUNT TYPE	BKG (cpm)	INSTRUMENT READING (Net cpm)	FLUSH/RE-CHARGE (N/A if not gas prop. det.) (Initials)	% ERROR ± 20% IN TOL (Initials)	RCT SIGNATURE
0610 8/2/02	[redacted]	Y	Y	Alpha	3	3559	NA	[redacted]	[redacted]
				Beta	360	4987			
8/5/02 0614		Y	Y	Alpha	2	3511		T	
				Beta	381	5044			
080607 0611		Yes	Yes	Alpha	0	3496		T	
				Beta	396	4790			
0613 080		Yes	Yes	Alpha	2	3710		T	
				Beta	355	4869			
8/7/02 0613		Yes	Yes	Alpha	4	3416		T	
				Beta	365	5016			
0606 080802		Yes	Yes	Alpha	4	3537		BK	
				Beta	374	4659			
0618 080902		Yes	Yes	Alpha	2	3401		BK	
				Beta	349	4701			
NA		NA	NA	Alpha	NA	NA		NA	
				Beta					
				Alpha					
				Beta					
				Alpha					
				Beta					
				Alpha					
				Beta					
				Alpha					
				Beta					
NA	NA	NA	NA	Alpha	NA	NA	NA	NA	NA
				Beta					

 * Guidance for use of this form is located on the back of the form

PORTABLE SCALER CONTAMINATION INSTRUMENT PERFORMANCE TEST LOG RSFORMS-02.01-04

SOURCE ISOTOPE (Alpha): Pu 239 (CSL)/(S/N)/(Registry No.): 603577 Certification/Decay Chart Date: 01/22/02
(Circle One) (Circle One)

Source (dpm): 17529 Range (cpm) ± 20%: 3211 - 4817

SOURCE ISOTOPE (Beta): _____ (CSL)/(S/N)/(Registry No.): 604432 Certification/Decay Chart Date: 01/22/02
(Circle One)

Source (dpm): 18290 Range (cpm) ± 20%: 4439 - 6659

Approved by: RS Supervision:			
Name (print)	Signature	[redacted]	Date: 82502

$$\%Error = \frac{(Net\ cpm \div eff) - Source\ dpm}{Source\ dpm} \times (100)$$

Where Net cpm = Source cpm - Background cpm

GUIDANCE:

- The appropriate instrument data and building location is recorded on RSFORMS-02.01-04.
- Obtain an appropriate certified source or decay chart source for the instrument being tested.
- A general inspection is performed on the instrument for the following:
  - * Physical condition of the detector, cables, and instrument
  - * Instrument battery/power supply check is satisfactory
  - * Instrument audio check is satisfactory, as applicable
  - * Instrument light leak check is satisfactory, as applicable
  - * Instrument background response check is within tolerances of expected values (typically 1 minute count)
  - * Instrument corrected source count reading falls within an acceptable range (± 20% of source value typically using a 1 minute count)
- Performance test data is recorded (as applicable) to each portable contamination survey instrument with signature upon completion.

PORTABLE SCALER CONTAMINATION INSTRUMENT PERFORMANCE TEST LOG RSFORMS-02.01-04

Alpha Beta

INST. TYPE/SERIAL #: NE Electra 3171 CAL. DUE DATE: 11/7/02 INSTRUMENT EFFICIENCY: 23.7 / 32.9

PROBE S/N: 1872 BLDG. T-130-T

This form is used to record parameters noted during daily performance checks on NE Electra, Bicron Frisk-Tech, Portable instruments with gas proportional detector. Instruments that require additional repair or service are returned to Instrumentation Repair Facility.

TIME/ DATE	RCT NAME/EMP #	IN CAL Yes No	BATT SAT Yes No	COUNT TYPE	BKG (cpm)	INSTRUMENT READING (Net cpm)	FLUSH/RE-CHARGE (N/A if not gas prop. det.) (Initials)	% ERROR ± 20% IN TOL (Initials)	RCT SIGNATURE
0900 8.21.02	[redacted]	Y	Y	Alpha	2	3506	N/A	GM.	[redacted]
				Beta	415	4972			
8/22/02		Y	Y	Alpha	4	3600			
				Beta	372	5330			
0677 082302		Y=S	Y=S	Alpha	4	3542			
				Beta	338	5306			
NA		NA	NA	Alpha	NA	NA			
				Beta				NA	
				Alpha					
				Beta					
				Alpha					
				Beta					
				Alpha					
				Beta					
				Alpha					
				Beta					
				Alpha					
				Beta					
				Alpha					
				Beta					
				Alpha					
				Beta					
				Alpha					
				Beta					
				Alpha					
				Beta					
NA	NA	NA	NA	Alpha			NA	NA	NA
				Beta	NA	NA			

4/31

SOURCE ISOTOPE (Alpha): Pu 239 (CSL)/(S/N)/(Registry No.): 603577 Certification/Decay Chart Date: 1-22-02
(Circle One) (Circle One)

Source (dpm): 17529 Range (cpm) ± 20%: 3324 – 4984
4154

SOURCE ISOTOPE (Beta): Sr 90 (CSL)/(S/N)/(Registry No.): 604432 Certification/Decay Chart Date: 1-22-02
(Circle One)

Source (dpm): 18253 Range (cpm) ± 20%: 4804 – 7206
6005

Approved by:
RS Supervision: [redacted] / [redacted] / [redacted] / 52402
Name (print) Signature E Date

$$\%Error = \frac{(Net\ cpm \div eff) - Source\ dpm}{Source\ dpm} \times (100)$$

Where Net cpm = Source cpm - Background cpm

GUIDANCE:

- The appropriate instrument data and building location is recorded on RSFORMS-02.01-04.
- Obtain an appropriate certified source or decay chart source for the instrument being tested.
- A general inspection is performed on the instrument for the following:
  - * Physical condition of the detector, cables, and instrument
  - * Instrument battery/power supply check is satisfactory
  - * Instrument audio check is satisfactory, as applicable
  - * Instrument light leak check is satisfactory, as applicable
  - * Instrument background response check is within tolerances of expected values (typically 1 minute count)
  - * Instrument corrected source count reading falls within an acceptable range (± 20% of source value typically using a 1 minute count)
- Performance test data is recorded (as applicable) to each portable contamination survey instrument with signature upon completion.

PORTABLE SCALER CONTAMINATION INSTRUMENT PERFORMANCE TEST LOG

RSFORMS-02.01-04

INST. TYPE/SERIAL #: NE/1397 CAL. DUE DATE: 9/6/02 INSTRUMENT EFFICIENCY: Alpha 19.5 Beta 132.3

PROBE S/N: 1310 BLDG. 130I

This form is used to record parameters noted during daily performance checks on NE Electra, Bicron Frisk-Tech, Portable instruments with gas proportional detector. Instruments that require additional repair or service are returned to Instrumentation Repair Facility.

TIME/ DATE	RCT NAME/EMP #	IN CAL Yes No	BATT SAT Yes No	COUNT TYPE	BKG (cpm)	INSTRUMENT READING (Net cpm)	FLUSH/RE-CHARGE (N/A if not gas prop. det.) (Initials)	% ERROR ± 20% IN TOL (Initials)	RCT SIGNATURE
0630 06/22/02	[redacted]	Y	Y	Alpha	0	3183	NA	[redacted]	[redacted]
				Beta	406	4776			
0612 082302		YES	YES	Alpha	1	3013		BA	
				Beta	406	4960			
0616 082602		YES	YES	Alpha	5	3187		BA	
				Beta	357	4699			
NA		NA	NA	Alpha	NA	NA		NA	
				Beta					
				Alpha					
				Beta					
				Alpha					
				Beta					
				Alpha					
				Beta					
				Alpha					
				Beta					
				Alpha					
				Beta					
				Alpha					
				Beta					
				Alpha					
				Beta					
				Alpha					
				Beta					
				Alpha					
				Beta					
NA	NA	NA	NA	Alpha			NA	NA	NA
				Beta	NA	NA			

* Guidance for use of this form is located on the back of the form

4/36

PORTABLE SCALER CONTAMINATION INSTRUMENT PERFORMANCE TEST LOG RSFORMS-02.01-04

SOURCE ISOTOPE (Alpha): Pu 239 (CSL)/(S/N)/(Registry No.): 603577 (Circle One) Certification/Decay Chart Date: 1/22/02 (Circle One)

Source (dpm): 17529 Range (cpm) ± 20%: 2735 - 4102

SOURCE ISOTOPE (Beta): SR-90 (CSL)/(S/N)/(Registry No.): 604432 Certification/Decay Chart Date: 1/22/02 (Circle One)

Source (dpm): 18253 Range (cpm) ± 20%: 4687 - 7031

Approved by:
RS Supervision: [signature] / [signature] / [redacted] / 92402

Name (print) Signature Date

$$\%Error = \frac{(Net\ cpm \div eff) - Source\ dpm}{Source\ dpm} \times (100)$$

Where Net cpm = Source cpm - Background cpm

GUIDANCE:

- The appropriate instrument data and building location is recorded on RSFORMS-02.01-04.
- Obtain an appropriate certified source or decay chart source for the instrument being tested.
- A general inspection is performed on the instrument for the following:
  - Physical condition of the detector, cables, and instrument
  - Instrument battery/power supply check is satisfactory
  - Instrument audio check is satisfactory, as applicable
  - Instrument light leak check is satisfactory, as applicable
  - Instrument background response check is within tolerances of expected values (typically 1 minute count)
  - Instrument corrected source count reading falls within an acceptable range (± 20% of source value typically using a 1 minute count)
- Performance test data is recorded (as applicable) to each portable contamination survey instrument with signature upon completion.

437

PORTABLE SCALER CONTAMINATION INSTRUMENT PERFORMANCE TEST LOG RSFORMS-02.01-04

INST. TYPE/SERIAL #: NE / 1364 CAL. DUE DATE: 2·1·03 INSTRUMENT EFFICIENCY: Alpha 20.4 Beta 28.2

PROBE S/N: ~~1336~~ 1242 BLDG. 130 I

8/22/02

This form is used to record parameters noted during daily performance checks on NE Electra, Bicron Frisk-Tech, Portable instruments with gas proportional detector. Instruments that require additional repair or service are returned to Instrumentation Repair Facility.

TIME/ DATE	RCT NAME/EMP #	IN CAL Yes No	BATT SAT Yes No	COUNT TYPE	BKG (cpm)	INSTRUMENT READING (Net cpm)	FLUSH/RE-CHARGE (N/A if not gas prop. det.) (Initials)	% ERROR ± 20% IN TOL (Initials)	RCT SIGNATURE
0615 8/22/02	[redacted]	Y	Y	Alpha	4	2993	NA		[redacted]
				Beta	283	5331			
0608 082302		Yes	Yes	Alpha	5	3136		BKG	
				Beta	278	4751			
0612 082602		Yes	Yes	Alpha	5	3164		B	
				Beta	244	4977			
0610 082702		Yes	Yes	Alpha	4	2991		JK	
				Beta	261	4782			
0614 8-23-02		Y	Y	Alpha	2	[illegible]		MM	
				Beta	255	[illegible]			
NA		NA	NA	Alpha	NA	NA		NA	
				Beta					
				Alpha					
				Beta					
				Alpha					
				Beta					
				Alpha					
				Beta					
				Alpha					
				Beta					
				Alpha					
				Beta					
				Alpha					
				Beta					
NA	NA	NA	NA	Alpha					
				Beta	NA	NA	NA	NA	NA

 * Guidance for use of this form is located on the back of the form

138

PORTABLE SCALER CONTAMINATION INSTRUMENT PERFORMANCE TEST LOG RSFORMS-02.01-04

SOURCE ISOTOPE (Alpha): Pu 239 (CSL)/(S/N)/(Registry No.): 603577 Certification/Decay Chart Date: 1-22-02
(Circle One) (Circle One)

Source (dpm): 17529 Range (cpm) ± 20%: 2841 - 4291

SOURCE ISOTOPE (Beta): SR-90 (CSL)/(S/N)/(Registry No.): 604432 Certification/Decay Chart Date: 1/22/02
(Circle One)

Source (dpm): 18253 Range (cpm) ± 20%: 4687 - 7031

Approved by:
RS Supervision: [redacted] 1/24/02
Name (print) Signature Date

$$\%Error = \frac{(Net\ cpm \div eff) - Source\ dpm}{Source\ dpm} \times (100)$$

Where Net cpm = Source cpm - Background cpm

GUIDANCE:

- The appropriate instrument data and building location is recorded on RSFORMS-02.01-04.
- Obtain an appropriate certified source or decay chart source for the instrument being tested.
- A general inspection is performed on the instrument for the following:
  - Physical condition of the detector, cables, and instrument
  - Instrument battery/power supply check is satisfactory
  - Instrument audio check is satisfactory, as applicable
  - Instrument light leak check is satisfactory, as applicable
  - Instrument background response check is within tolerances of expected values (typically 1 minute count)
  - Instrument corrected source count reading falls within an acceptable range (± 20% of source value typically using a 1 minute count)
- Performance test data is recorded (as applicable) to each portable contamination survey instrument with signature upon completion.

439

P[illegible]TABLE SCALER CONTAMINATION INSTRUMENT [illegible]RFORMANCE TEST LOG RSFORMS-02.01-0[illegible]

INST. TYPE/SERIAL #: NE 1833 CAL. DUE DATE: 10·3·02 INSTRUMENT EFFICIENCY: Alpha 23.3 / Beta 31.7

PROBE S/N: 1532 BLDG. 130I

This form is used to record parameters noted during daily performance checks on NE Electra, Bicron Frisk-Tech, Portable instruments with gas proportional detector. Instruments that require additional repair or service are returned to Instrumentation Repair Facility.

TIME/ DATE	RCT NAME/EMP #	IN CAL Yes No	BATT SAT Yes No	COUNT TYPE	BKG (cpm)	INSTRUMENT READING (Net cpm)	FLUSH/RE-CHARGE (N/A if not gas prop. det.) (Initials)	% ERROR ± 20% IN TOL (Initials)	RCT SIGNATURE
0608 081402	[redacted]	YES	YES	Alpha	5	3649	NA	[illegible]	[redacted]
				Beta	451	5429			
0618 081502		YES	YES	Alpha	1	3548		[illegible]	
				Beta	345	4825			
0616 081602		YES	YES	Alpha	3	3602		[illegible]	
				Beta	360	5302			
0620 8/19/02		Y	Y	Alpha	5	3511			
				Beta	327	5076		T	
0609 082002		YES	YES	Alpha	5	3594		[illegible]	
				Beta	358	5766			
0550 8.21.02		Y	Y	Alpha	3	3319		[illegible]	
				Beta	366	5686			
0600 8.22.02		Y	Y	Alpha	2	3567		[illegible]	
				Beta	319	4877			
0614 082302		YES	YES	Alpha	1	3471		[illegible]	
				Beta	362	4900			
0616 082602		YES	YES	Alpha	1	3495		[illegible]	
				Beta	373	4785			
0620 082702		Yes	Yes	Alpha	4	3474		[illegible]	
				Beta	330	4713			
[illegible] 8.28.02		Y	Y	Alpha	4	3439		[illegible]	
				Beta	381	4764			
NA		NA	NA	Alpha	NA	NA		NA	
				Beta					
NA		NA	NA	Alpha				NA	
				Beta					
NA	NA	NA	NA	Alpha			NA	NA	
				Beta	NA	NA			

Rev 04/01 Page 1 * Guidance for use of this form is located on the back of the form

440

PORTABLE SCALER CONTAMINATION INSTRUMENT PERFORMANCE TEST LOG RSFORMS-02.01-04

SOURCE ISOTOPE (Alpha): Pu239 (CSL)/(S/N)/(Registry No.): 603577 Certification/Decay Chart Date: 01 2202
(Circle One) (Circle One)

Source (dpm): 17529 Range (cpm) ± 20%: 3267 - 4901

SOURCE ISOTOPE (Beta): Sr-90 (CSL)/(S/N)/(Registry No.): 604432 Certification/Decay Chart Date: 01 2202
(Circle One)

Source (dpm): 18253 Range (cpm) ± 20%: 4629 - 6943

Approved by: RS Supervision:			
Name (print)	Signature	[redacted]	Date

$$\%Error = \frac{(Net\ cpm \div eff) - Source\ dpm}{Source\ dpm} \times (100)$$

Where Net cpm = Source cpm - Background cpm

GUIDANCE:

- The appropriate instrument data and building location is recorded on RSFORMS-02.01-04..
- Obtain an appropriate certified source or decay chart source for the instrument being tested.
- A general inspection is performed on the instrument for the following:
  - * Physical condition of the detector, cables, and instrument
  - * Instrument battery/power supply check is satisfactory
  - * Instrument audio check is satisfactory, as applicable
  - * Instrument light leak check is satisfactory, as applicable
  - * Instrument background response check is within tolerances of expected values (typically 1 minute count)
  - * Instrument corrected source count reading falls within an acceptable range (± 20% of source value typically using a 1 minute count)
- Performance test data is recorded (as applicable) to each portable contamination survey instrument with signature upon completion.

PORTABLE SCALER CONTAMINATION INSTRUMENT PERFORMANCE TEST LOG RSFORMS-02.01-04

INST. TYPE/SERIAL #: N.E. Electra 3254 CAL. DUE DATE: 1-16-03 INSTRUMENT EFFICIENCY: Alpha 22.3 / Beta 33.6

PROBE S/N: 1977 BLDG. T-130-1

This form is used to record parameters noted during daily performance checks on NE Electra, Bicron Frisk-Tech, Portable instruments with gas proportional detector. Instruments that require additional repair or service are returned to Instrumentation Repair Facility.

TIME/ DATE	RCT NAME/EMP #	IN CAL Yes No	BATT SAT Yes No	COUNT TYPE	BKG (cpm)	INSTRUMENT READING (Net cpm)	FLUSH/RE-CHARGE (N/A if not gas prop. det.) (Initials)	% ERROR ±20% IN TOL (Initials)	RCT SIGNATURE
0745 8-28-03	[redacted]	Y	Y	Alpha	1	3353	NA	YM	[redacted]
				Beta	323	4990			
0620 8-29-03		Y	Y	Alpha	0	3193		YM	
				Beta	383				
8290 NA		NA	NA	Alpha	NA	NA			
				Beta				NA	
				Alpha					
				Beta					
				Alpha					
				Beta					
				Alpha					
				Beta					
				Alpha					
				Beta					
				Alpha					
				Beta					
				Alpha					
				Beta					
				Alpha					
				Beta					
				Alpha					
				Beta					
				Alpha					
				Beta					
				Alpha					
				Beta					
				Alpha					
				Beta					
NA	NA	NA	NA	Alpha	NA	NA	NA	NA	NA
				Beta					

 * Guidance for use of this form is located on the back of the form

4112

SOURCE ISOTOPE (Alpha): Pu-239 (CSL)/(S/N)/(Registry No.): 603577 Certification/Decay Chart Date: 1-22-02
(Circle One) (Circle One)

Source (dpm): 17529 Range (cpm) ± 20%: 3128 – 4626

SOURCE ISOTOPE (Beta): Sr-90 (CSL)/(S/N)/(Registry No.): 604432 Certification/Decay Chart Date: 1-22-02
(Circle One)

Source (dpm): 18253 Range (cpm) ± 20%: 4907 – 7359

Approved by:
RS Supervision: [redacted] 1/92402
Name (print) Signature Date

$$\%Error = \frac{(Net\ cpm + eff) - Source\ dpm}{Source\ dpm} \times (100)$$

Where Net cpm = Source cpm - Background cpm

GUIDANCE:

- The appropriate instrument data and building location is recorded on RSFORMS-02.01-04.
- Obtain an appropriate certified source or decay chart source for the instrument being tested.
- A general inspection is performed on the instrument for the following:
  - Physical condition of the detector, cables, and instrument
  - Instrument battery/power supply check is satisfactory
  - Instrument audio check is satisfactory, as applicable
  - Instrument light leak check is satisfactory, as applicable
  - Instrument background response check is within tolerances of expected values (typically 1 minute count)
  - Instrument corrected source count reading falls within an acceptable range (± 20% of source value typically using a 1 minute count)
- Performance test data is recorded (as applicable) to each portable contamination survey instrument with signature upon completion.

443/443

ROCKY FLATS ENVIRONMENTAL TECHNOLOGY SITE

INSTRUMENT DATA

Mfg.	Eberline	Mfg.	NE Electra	Mfg.	NE Electra
Model	SAC-4	Model	DP-6	Model	DP-6
Serial #	959	Serial #	NA	Serial #	2394
Cal Due	1/18/03	Cal Due	NA	Cal Due	3/5/03
Bkg	0 cpmα	Bkg	NA cpmα	Bkg	5 cpmα
Eff.	33 %	Eff.	NA %	Eff.	22.1 %
MDA	20 dpmα	MDA	NA dpmα	MDA	59 dpmα

Mfg.	Eberline	Mfg.	NE Electra	Mfg.	NE Electra
Model	BC-4	Model	DP-6	Model	DP-6
Serial #	700	Serial #	NA	Serial #	2394
Cal Due	12/13/02	Cal Due	NA	Cal Due	3/5/03
Bkg	30.6 cpmα	Bkg	NA cpmβ	Bkg	553 cpmβ
Eff.	25 %	Eff.	NA %	Eff.	30.2 %
MDA	200 dpmα	MDA	NA dpmβ	MDA	371 dpmβ

Survey Type: Contamination/ Radation
Building: 788 pad
Location: North east corner of pond A
Purpose: LLW

RWP #: 02-RISS-020

Date: 10/1/02 Time: 1500

[redacted]

RCT: NA / NA / NA
Print name Signature Emp. #

PRN/REN # : NA
Comments: Performed one minute pats, swipes, and scanned.

SURVEY RESULTS

Swipe #	LOCATION	ALPHA Swipe dpm/100cm2	ALPHA Direct dpm/100cm2	ALPHA Wipe dpm/wipe	BETA Swipe dpm/100cm2	BETA Direct dpm/100cm2	BETA Wipe dpm/wipe
1	OPWL	0	16	NA	38	304	NA
2	OPWL	0	31		0	178	
3	OPWL	0	22		34	338	
4	OPWL	0	16		22	205	
5	OPWL	0	0		18	109	
6	OPWL	0	0		10	278	
NA	NA	NA	NA		NA	NA	
NA	NA	NA	NA	NA	NA	NA	NA

Date Reviewed: 10-3-02 RS Supervision: James W Smith James W Smith [redacted]
Print Name Signature

1444

ROCKY FLATS ENVIRONMENTAL TECHNOLOGY SITE

INSTRUMENT DATA

Mfg.	Eberline	Mfg.	Eberline	Mfg.	NE Electra
Model	SAC-4	Model	BC-4	Model	DP-6
Serial #	959	Serial #	911	Serial #	2394
Cal Due	1/18/02	Cal Due	10/30/02	Cal Due	3/5/03
Bkg	0 cpmα	Bkg	32.0 cpmβ	Bkg	1 cpmα
Eff.	33 %	Eff.	25 %	Eff.	22.1 %
MDA	20 dpmα	MDA	200 dpmβ	MDA	33 dpmα

Mfg.	Eberline	Mfg.	Eberline	Mfg.	NE Electra
Model	SAC-4	Model	BC-4	Model	DP-6
Serial #	NA	Serial #	NA	Serial #	2394
Cal Due		Cal Due		Cal Due	3/5/03
Bkg	cpmα	Bkg	cpmβ	Bkg	343 cpmβ
Eff.	%	Eff.	%	Eff.	30.2 %
MDA	NA dpmα	MDA	NA dpmβ	MDA	294 dpmβ

Survey Type: Contamination
Building: Solar Pond
Location: general area
Purpose: Remove Drain line East side of "A"pond

RWP #: 02-RISS-020

Date: 10/4/02 Time: 1600

[redacted]

RCT: NA / NA / NA
Print name Signature Emp. #

PRN/REN # : NA
Comments: Remove drian line east side of "A" Solar Pond.

SURVEY RESULTS

Swipe #	LOCATION	ALPHA Swipe dpm/100cm2	ALPHA Direct dpm/100cm2	ALPHA Wipe dpm/wipe	BETA Swipe dpm/100cm2	BETA Direct dpm/100cm2	BETA Wipe dpm/wipe
1	Inside of line	< 20	<33	NA	< 200	<294	NA
2	Inside of line	< 20	<33	NA	< 200	<294	NA
3	Inside of line	< 20	<33	NA	< 200	<294	NA
4	Inside of line	< 20	<33	NA	< 200	<294	NA
5	Inside of line	< 20	<33	NA	< 200	<294	NA
6	NA	NA	NA	NA	NA	NA	NA
7	NA	NA	NA	NA	NA	NA	NA
8	NA	NA	NA	NA	NA	NA	NA
9	NA	NA	NA	NA	NA	NA	NA
10	NA	NA	NA	NA	NA	NA	NA
11	NA	NA	NA	NA	NA	NA	NA
12	NA	NA	NA	NA	NA	NA	NA
13	NA	NA	NA	NA	NA	NA	NA
14	NA	NA	NA	NA	NA	NA	NA
15	NA	NA	NA	NA	NA	NA	NA
NA	NA	NA	NA	NA	NA	NA	NA
NA	NA	NA	NA	NA	NA	NA	NA
NA	NA	NA	NA	NA	NA	NA	NA
NA	NA	NA	NA	NA	NA	NA	NA
NA	NA	NA	NA	NA	NA	NA	NA

Date Reviewed: 10-13-02 **RS Supervision:** [redacted]
Print Name Signature

ROCKY FLATS ENVIRONMENTAL TECHNOLOGY SITE

INSTRUMENT DATA

Mfg.	Eberline	Mfg.	NA	Mfg.	NE Electra
Model	SAC-4	Model		Model	DP-6
Serial #	824	Serial #		Serial #	1249
Cal Due	10/1/02	Cal Due		Cal Due	10/5/02
Bkg.	0.2 cpm α	Bkg.		Bkg.	4 cpm α
Efficiency	33.0 %	Efficiency		Efficiency	21.3 %
MDA	20 dpm α	MDA	NA	MDA	56 dpm α

Mfg.	Eberline	Mfg.	NA	Mfg.	NE Electra
Model	BC-4	Model		Model	DP-6
Serial #	700	Serial #		Serial #	1249
Cal Due	12/13/02	Cal Due		Cal Due	10/5/02
Bkg.	33.8 cpm β	Bkg.		Bkg.	542 cpm β
Efficiency	25.0 %	Efficiency		Efficiency	33.8 %
MDA	200 dpm β	MDA	NA	MDA	328 dpm β

Survey type: Contamination
Building: NA
Location: East of 207B Solar Ponds
Purpose: Pre-job/In-progress of Pipe Cutting

RWP #: 02-RISS-020

Date: 9/17/02 Time: 1030

[redacted]

PRN/REN # : NA

Comments: Performed swipe and direct surveys on piping prior to cutting and following penetration of piping. Water was found to be in pipe at swipe location #8. Pipe cut was sealed and swipes 9-11 were taken to verify no spread of contamination. All personnel in pit were surveyed-no contamination detected.

SURVEY RESULTS

Swipe #	LOCATION/DESCRIPTION	ALPHA			BETA		
		Swipe	Direct	Wipe	Swipe	Direct	Wipe
		dpm/100cm2	dpm/100cm2	dpm/wipe	dpm/100cm2	dpm/100cm2	dpm/wipe
1	Exterior Pipe (Pre-Cut)	<20	<56	NA	<200	<328	NA
2	Pipe Internal (Post-Cut)	<20	<56		<200	<328	
3	Pipe Internal (Post-Cut)	<20	<56		<200	<328	
4	Pipe exterior following accidental breach during excavation	<20	<56		<200	<328	
5	Exterior Pipe (Pre-Cut)	<20	<56		<200	<328	
6	Pipe Internal (Post-Cut)	<20	<56		<200	<328	
7	Pipe Internal (Post-Cut)	<20	<56		<200	<328	
8	Exterior Pipe (Pre-Cut)	<20	<56		<200	<328	
9	Valve Actuator	<20	NA		<200	NA	
10	Exterior Pipe (Pre-Cut)	<20			<200		
11	Dirt	<20			<200		
NA	NA	NA			NA		
NA	NA	NA	NA	NA	NA	NA	NA

Date Reviewed: 9-17-02 **RS Supervision:** [redacted]

Print Name Signature

446

Drawing Showing Survey Points

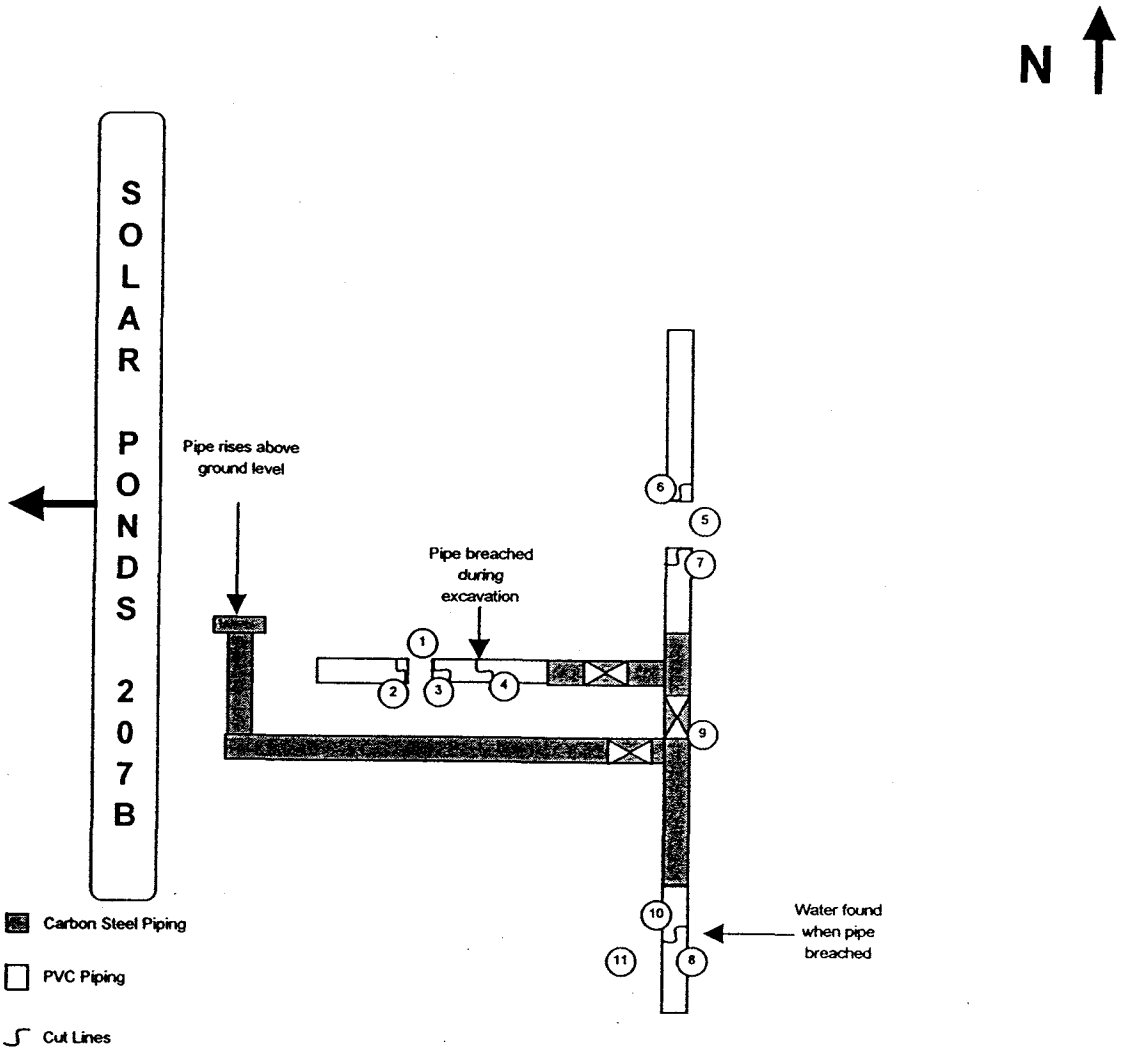

447

[redacted] ENVIRONMENTAL RESTORATION UNIT

INSTRUMENT DATA

Mfg.	Ludlum	Mfg.	Ludlum	Mfg.	NE Electra
Model	2929	Model	2929	Model	DP-6
Serial #	147735	Serial #	176090	Serial #	3171
Cal Due	1/25/03	Cal Due	11/30/02	Cal Due	11/7/02
Bkg.	0.6 cpm α	Bkg.	0.6 cpm α	Bkg.	3 cpm α
Efficiency	35.3 %	Efficiency	34.8 %	Efficiency	23.7 %
MDA	18 dpm α	MDA	18 dpm α	MDA	45 dpm α

Mfg.	Ludlum	Mfg.	Ludlum	Mfg.	NE Electra
Model	2929	Model	2929	Model	DP-6
Serial #	147735	Serial #	176090	Serial #	3171
Cal Due	1/25/03	Cal Due	11/30/02	Cal Due	11/7/02
Bkg.	64.1 cpm β	Bkg.	84.4 cpm β	Bkg.	949 cpm β
Efficiency	39.8 %	Efficiency	39.5 %	Efficiency	32.9 %
MDA	205 dpm α	MDA	205 dpm α	MDA	444 dpm β

Survey type: Contamination
Building: Solar Ponds
Location: Valve Pit 1
Purpose: Job In-progress Survey

RWP #: 02-RISS-020

Date: 8/21/02 Time: 1300

[redacted]

RCT: NA / NA / NA
Print name Signature Emp. #

PRN/REN # : NA

Comments: Performed scan survey on pit walls from ground level down to approximately 3 feet below ground level. Performed swipe and 60 second PAT survey at locations shown on map. It is estimated that there is 1 foot of dirt still at bottom of pit.

SURVEY RESULTS

Swipe #	LOCATION/DESCRIPTION	ALPHA			BETA		
		Swipe	Direct	Wipe	Swipe	Direct	Wipe
		dpm/100cm2	dpm/100cm2	dpm/wipe	dpm/100cm2	dpm/100cm2	dpm/wipe
1	Wall	<18	60	NA	<205	1401	NA
2	Wall	<18	84		<205	2391	
3	Wall	<18	78		<205	2391	
4	Wall	<18	84		<205	2430	
5	Wall	<18	198		<205	2484	
6	Wall	<18	138		<205	1113	
7	Wall	<18	132		<205	2922	
8	Wall	<18	132		<205	1869	
9	Valve	<18	168		<205	4212	
10	Ground	NA	<45		NA	<444	
11	Ground		<45			<444	
12	Ground		<45			<444	
NA	NA		NA			NA	
NA	NA	NA	NA	NA	NA	NA	NA

Date Reviewed: 8-22-02 **RS Supervision:** James W Smith / James W Smith [redacted]
Print Name Signature

448

VALVE PIT 1 BETWEEN 'A' & 'C' SOLAR PONDS

N

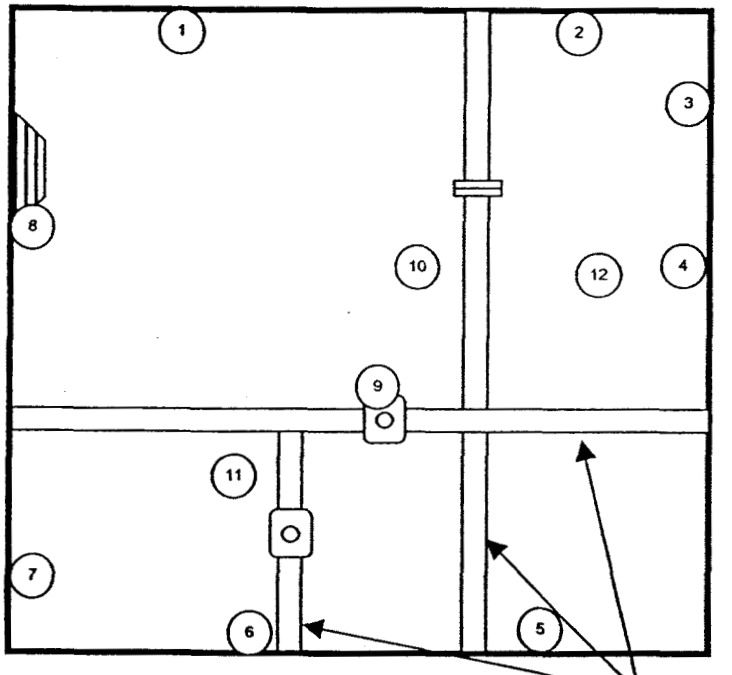

449

ROCKY FLATS ENVIRONMENTAL TECHNOLOGY SITE

INSTRUMENT DATA

Mfg.	Ludlum	Mfg.	Ludlum	Mfg.	NE Electra
Model	2929	Model	2929	Model	DP-6
Serial #	147735	Serial #	176090	Serial #	1366
Cal Due	1/25/03	Cal Due	11/30/02	Cal Due	2/1/03
Bkg.	0.3 cpm α	Bkg.	0.7 cpm α	Bkg.	5 cpm α
Efficiency	35.3 %	Efficiency	34.8 %	Efficiency	20.4 %
MDA	18 dpm α	MDA	18 dpm α	MDA	64 dpm α
Mfg.	Ludlum	Mfg.	Ludlum	Mfg.	NE Electra
Model	2929	Model	2929	Model	DP-6
Serial #	147735	Serial #	176090	Serial #	1366
Cal Due	1/25/03	Cal Due	11/30/02	Cal Due	2/1/03
Bkg.	65.7 cpm β	Bkg.	88.6 cpm β	Bkg.	412 cpm β
Efficiency	39.8 %	Efficiency	39.5 %	Efficiency	28.2 %
MDA	205 dpm α	MDA	205 dpm α	MDA	344 dpm β

Survey type: Contamination
Building: 788 Pad
Location: A' Solar Pond
Purpose: Process/Distillate Return Line Removal
RWP #: 02-RISS-020
Date: 8/28/02 Time: 1030

[redacted]

RCT: NA / NA / NA
Print name Signature Emp. #

PRN/REN # : NA
Comments: *Performed swipe and 60 second PAT survey on piping listed below on pipe ends after being cut.*
SCO Plan #

SURVEY RESULTS

Swipe #	LOCATION/DESCRIPTION	ALPHA Swipe	ALPHA Direct	ALPHA Wipe	BETA Swipe	BETA Direct	BETA Wipe
		dpm/100cm2	dpm/100cm2	dpm/wipe	dpm/100cm2	dpm/100cm2	dpm/wipe
1	6" Process Line at Cut End	<18	18	NA	<205	0	NA
2	6" Process Line at Cut End	<18	24		<205	0	
3	6" Process Line at Cut End	<18	18		<205	0	
4	6" Process Line at Cut End	<18	6		<205	0	
5	6" Process Line at Cut End	<18	54		<205	36	
6	6" Process Line at Cut End	<18	24		<205	0	
7	6" Process Line at Cut End	<18	36		<205	24	
8	6" Process Line at Cut End	<18	18		<205	0	
9	6" Process Line at Cut End	<18	18		<205	0	
10	6" Process Line at Cut End	<18	42		<205	0	
11	6" Process Line at Cut End	<18	72		<205	54	
12	6" Process Line at Cut End	<18	78		<205	60	
13	6" Process Line at Cut End	<18	48		<205	12	
14	6" Process Line at Cut End	<18	18		<205	0	
15	6" Process Line at Cut End	<18	30		<205	0	
16	3" Distillate Return Line at Cut End	<18	12		<205	0	
17	3" Distillate Return Line at Cut End	<18	18		<205	0	
18	3" Distillate Return Line at Cut End	<18	18		<205	0	
19	3" Distillate Return Line at Cut End	<18	24		<205	0	
20	3" Distillate Return Line at Cut End	<18	42	NA	<205	18	NA

Date Reviewed: 8-29-02 RS Supervision: James W Smith / James W Smith [redacted]
Print Name Signature

450

SURVEY RESULTS

Swipe #	LOCATION	ALPHA Swipe dpm/100cm2	ALPHA Direct dpm/100cm2	ALPHA Wipe dpm/wipe	BETA Swipe dpm/100cm2	BETA Direct dpm/100cm2	BETA Wipe dpm/wipe
21	3" Distillate Return Line at Cut End	<18	36	NA	205	12	NA
22	3" Distillate Return Line at Cut End	<18	36		205	0	
23	3" Distillate Return Line at Cut End	<18	18		205	0	
24	3" Distillate Return Line at Cut End	<18	12		205	0	
25	3" Distillate Return Line at Cut End	<18	24		205	0	
26	3" Distillate Return Line at Cut End	<18	12		205	0	
27	3" Distillate Return Line at Cut End	<18	6		205	0	
28	3" Distillate Return Line at Cut End	<18	30		205	0	
29	3" Distillate Return Line at Cut End	<18	24		205	0	
30	3" Distillate Return Line at Cut End	<18	24		205	0	
NA	NA	NA	NA		NA	NA	
NA	NA	NA	NA	NA	NA	NA	NA

ROCKY FLATS ENVIRONMENTAL TECHNOLOGY SITE

INSTRUMENT DATA

Mfg.	Eberline	Mfg.	Eberline	Mfg.	NE Electra
Model	SAC-4	Model	BC-4	Model	DP-6
Serial #	959	Serial #	835	Serial #	2394
Cal Due	1/18/03	Cal Due	9/17/03	Cal Due	3/5/03
Bkg	0.2 cpmα	Bkg	34.1 cpmβ	Bkg	3 cpmα
Eff.	33 %	Eff.	25 %	Eff.	22.1 %
MDA	20 dpmα	MDA	200 dpmβ	MDA	49 dpmα
Mfg.	Eberline	Mfg.	Eberline	Mfg.	NE Electra
Model	SAC-4	Model	BC-4	Model	DP-6
Serial #	NA	Serial #	NA	Serial #	2394
Cal Due		Cal Due		Cal Due	3/5/03
Bkg	cpmα	Bkg	cpmβ	Bkg	449 cpmβ
Eff.	%	Eff.	%	Eff.	30.2 %
MDA	NA dpmα	MDA	NA dpmβ	MDA	335 dpmβ

Survey Type: Contamination
Building: 788
Location: South west corner of C solar pond
Purpose: Line removal from 207 tank.

RWP #: 02-RISS-20

Date: 10/10/02 Time: 1000

[redacted]

PRN/REN # : NA
Comments: Survey performed on the waste line coming from the 207 tank. Cuts performed inside a glove bag after the initial tap and drain.

SURVEY RESULTS

Swipe	LOCATION	ALPHA			BETA		
		Swipe	Direct	Wipe	Swipe	Direct	Wipe
#	see map	dpm/100cm2	dpm/100cm2	dpm/wipe	dpm/100cm2	dpm/100cm2	dpm/wipe
1	pipe	337	NA	NA	591	NA	NA
2	pipe	287	NA	NA	269	NA	NA
3	pipe	123	NA	NA	465	NA	NA
4	pipe	22	NA	NA	40	NA	NA
5	pipe	18	NA	NA	73	NA	NA
6	pipe	27	NA	NA	93	NA	NA
7	vent pipe	319	NA	NA	1162	NA	NA
NA	NA	NA	NA	NA	NA	NA	NA
NA	NA	NA	NA	NA	NA	NA	NA
NA	NA	NA	NA	NA	NA	NA	NA
NA	NA	NA	NA	NA	NA	NA	NA
NA	NA	NA	NA	NA	NA	NA	NA
NA	NA	NA	NA	NA	NA	NA	NA
NA	NA	NA	NA	NA	NA	NA	NA
NA	NA	NA	NA	NA	NA	NA	NA
NA	NA	NA	NA	NA	NA	NA	NA
NA	NA	NA	NA	NA	NA	NA	NA
NA	NA	NA	NA	NA	NA	NA	NA
NA	NA	NA	NA	NA	NA	NA	NA
NA	NA	NA	NA	NA	NA	NA	NA

Date Reviewed: 10-17-02 RS Supervision: S Graham / [redacted]
Print Name Signature

452

Drawing Showing Survey Points

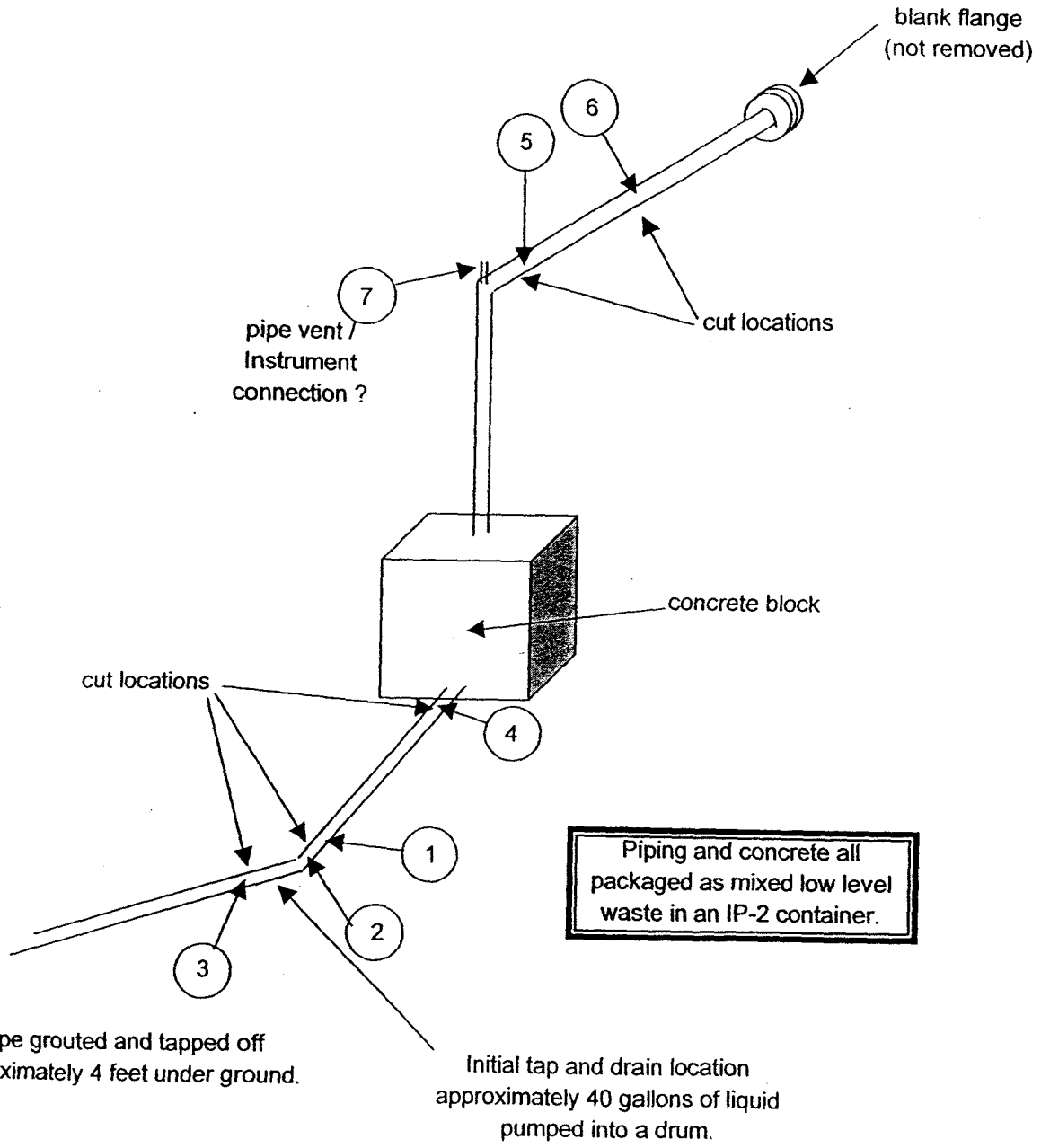

453/453