NOTICE

All drawings located at the end of the document.

TITLE II DESIGN DOCUMENT FOR THE 881 HILLSIDE REMEDIAL ACTION

VOLUME II - DRAWINGS

PREPARED FOR

ROCKWELL INTERNATIONAL
NORTH AMERICAN SPACE OPERATIONS
ROCKY FLATS PLANT

AUGUST 1988

ADMIN RECORD

PREPARED BY

ENGINEERING-SCIENCE, INC.
Denver, Colorado

IN CONJUNCTION WITH

THE RALPH M. PARSONS COMPANY
Pasadena, California

"REVIEWED FOR CLASSIFICATION
By R. B. Hoffman (U)
Date 6-9-88

"REVIEWED FOR CLASSIFICATION (U)
By [illegible]
Date 6/11/88"

A-OU01-000019

ES ENGINEERING-SCIENCE

TABLE OF CONTENTS

VOLUME I

FORWARD i

SECTION I TITLE II DESIGN SUMMARY

INTRODUCTION 1-1
1.1 Scope 1-1
1.2 Purpose of Project 1-1
1.3 Location of Work 1-2
1.4 Design Criteria 1-2
1.5 Work Included 1-3
1.6 Component Checkout and Systems Operating Test Procedures 1-4
1.7 Regulatory Compliance 1-4
BASIS FOR DESIGN 1-4
1.8 General 1-4
1.9 Removals 1-10
1.10 Process Design 1-10
1.11 Civil Design 1-10
1.12 Architectural Design 1-13
1.13 Structural Design 1-14
1.14 Mechanical Design 1-14
1.15 Piping 1-16
1.16 Electrical 1-17
1.17 Alarms and Instrumentation 1-19
1.18 Fire Protection 1-22

SECTION 2 TECHNICAL SPECIFICATIONS 2-1
SECTION 3 GOVERNMENT FURNISHED EQUIPMENT (GFE) 3-1
SECTION 4 CALCULATIONS 4-1
SECTION 5 QUALITY ACCEPTANCE CRITERIA CHECKLIST 5-1
SECTION 6 COMPONENT CHECKOUT (CC) AND SYSTEMS OPERATIONS (SO) TEST PROCEDURES 6-1
SECTION 7 COST ESTIMATE 7-1

VOLUME II

SECTION 8 REDUCED TITLE II REVIEW DRAWINGS 8-1

SECTION 8
REDUCED TITLE II REVIEW DRAWINGS

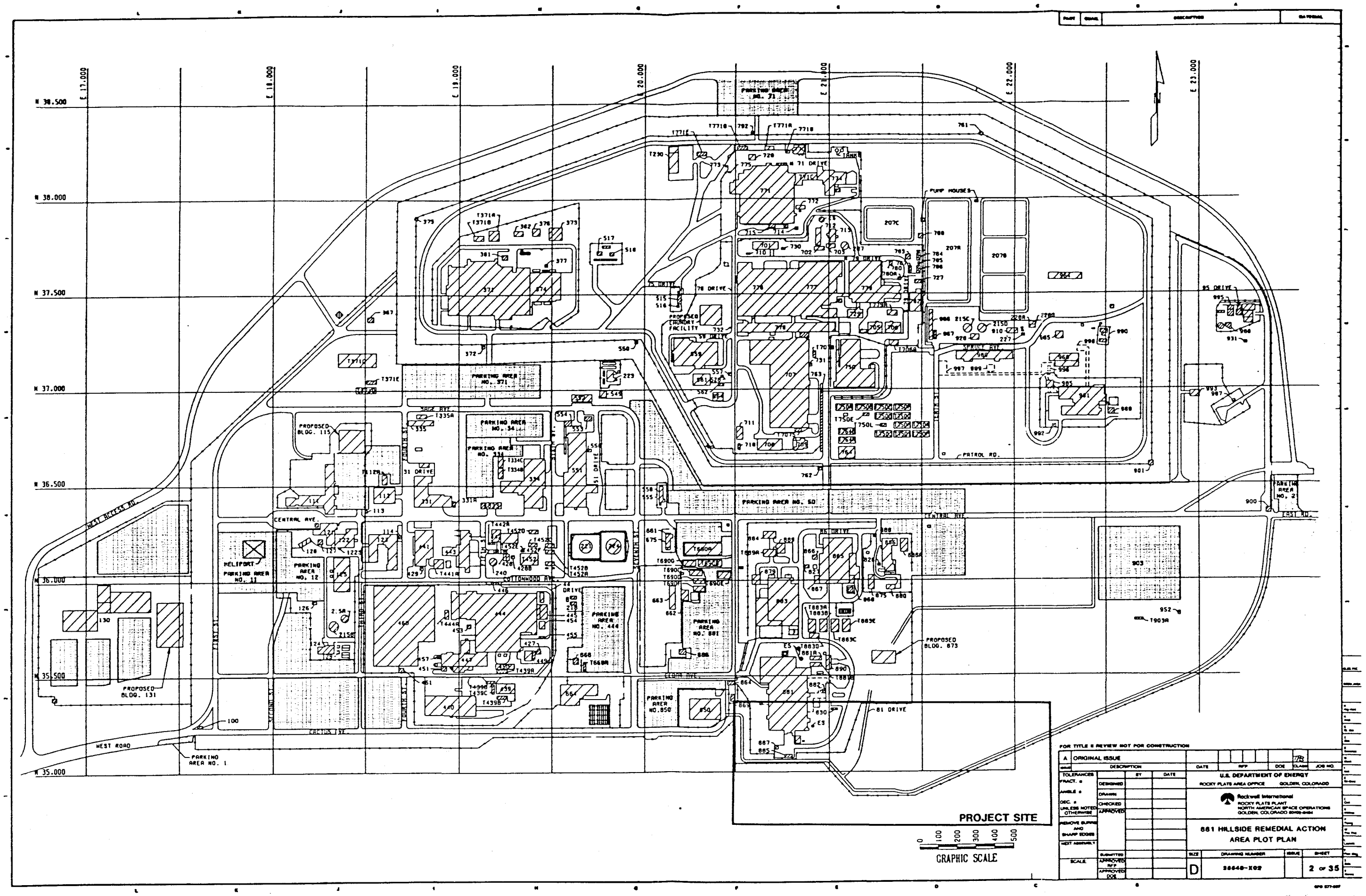

FOR TITLE II REVIEW NOT FOR CONSTRUCTION

ISSUE	DESCRIPTION	DATE	RFP	DOE	CLASS	JOB NO.
A	ORIGINAL ISSUE					

TOLERANCES		BY	DATE
FRACT. ±	DESIGNED		
ANGLE ±	DRAWN		
DEC. ±	CHECKED		
UNLESS NOTED OTHERWISE	APPROVED		
REMOVE BURRS AND SHARP EDGES			
NEXT ASSEMBLY			
SCALE	SUBMITTED		
	APPROVED RFP		
	APPROVED DOE		

U.S. DEPARTMENT OF ENERGY
ROCKY FLATS AREA OFFICE GOLDEN, COLORADO

Rockwell International
ROCKY FLATS PLANT
NORTH AMERICAN SPACE OPERATIONS
GOLDEN, COLORADO 80401-9464

881 HILLSIDE REMEDIAL ACTION AREA PLOT PLAN

SIZE	DRAWING NUMBER	ISSUE	SHEET
D	38648-X02		2 OF 35

ALUMINUM GRATING

CHECKERPLATE

CONCRETE

BEDROCK

GRAVEL

UNDISTURBED SOIL

TOP SOIL

STRUCTURAL FILL

EMBEDMENT MATERIAL

SYMBOLS

BALL VAVLE

CHECK VAVLE

GATE VAVLE

PLUG VAVLE

UNION

OHANGE IN MATERIAL

DIREOTION OF FLOW

LINE DESIGNATION

2"TE-GS

LINE MATERIAL

LINE SERVICE

LINE SIZE

LINE MATERIAL

C	COPPER
CA	ASBESTOS CEMENT
CI	CAST IRON
CISP	CAST IRON SOIL PIPE
CMP	CORRUGATED METAL PIPE
CPVC	CHLORINATED PVC
DIP	DUCTILE IRON PIPE
DWCPVC	DOUBLE WALL PVC
GS	GALVANIZED STEEL
GSCW	GS COATED AND WRAPPED
PVC	POLYVINYL CHLORIDE
PPVC	PERFORATED PVO
SSWS	STAINLESS STEEL WELL SCREEN
SS	STAINLESS STEEL

LINE SERVICE

D	DRAIN
DCW	DOMESTIC COLD WATER
EFF	EFFLUENT
FD	FRENCH DRAIN
GT	GALLERY TRANSFER
IG	INFILTRATION GALLERY
INF	INFLUENT
REC	RECIRCULATION
SS	SANITARY SEWER
TE	TREATED EFFLUENT
TI	TREATMENT UNIT INFLUENT
TOF	TANK OVERFLOW
TPS	TRANSFER PUMP SUCTION
W	WASTE
WS	WELL SCREEN

ABBREVIATIONS

ALUM	ALUMINUM	HZ	HERTZ
APPROX	APPROXIMATE	INSUL	INSULATION
@	AT	INV	INVERT
ATTCH	ATTACHMENT	KW	KILOWATTS
B	BASE	LWS	LOW WATER SURFACE
BAT	BATTEN	MFGR	MANUFACTURER
BD	BOARD	MAX	MAXIMUM
BLDG	BUILDING	MET	METAL
CLG, CEILG	CEILING	MIN	MINIMUM
⊏	CHANNEL	MCC	MOTOR CONTROL CENTER
℄	CENTERLINE	MCP	MOTOR CONTROL PANEL
CFM	CUBIC FEET PER MINUTE	MTD	MOUNTED
CLR	CLEAR	N	NORTH
CONC	CONCRETE	NO., #	NUMBER
CONT	CONTINUOUS	O.C.	ON CENTER
CJ	CONSTRUOTION JOINT	OPNG	OPENING
DIAG	DIAGRAM	O.D.	OUTSIDE DIAMETER
DR	DOOR	P.I.	POINT OF INTERSECTION
DBL	DOUBLE	PROT	PROTECTION
DWG	DRAWING	PSI	POUNDS PER SQUARE INCH
E.F.	EACH FAOE	REINF	REINFORCING
EL,ELEV	ELEVATION	RM	ROOM
E.W.	EACH WAY	SIM	SIMILAR
EXIST	EXISTING	SPECS	SPECIFICATIONS
FIN	FINISHED	STD(S)	STANDARD(S)
FLR	FLOOR	STA	STATION
FTG	FOOTING	THK	THICK
GA	GAGE	T.O.S.	TOP OF SLAB
GYP	GYPSUM	TYP	TYPICAL
HORIZ	HORIZONTAL	V	VOLT
H.R.	HANDRAIL	VERT	VERTICAL
HT	HEIGHT	W/	WITH
HWS	HIGH WATER SURFACE		

FOR TITLE II REVIEW NOT FOR CONSTRUCTION

ISSUE	DESCRIPTION	DATE	RFP	DOE	CLASS	JOB NO.
A	ORIGINAL ISSUE					986147

KEYWORDS

TOLERANCES FRACT. ± ANGLE ± DEC. ± UNLESS NOTED OTHERWISE

REMOVE BURRS AND SHARP EDGES

NEXT ASSEMBLY

MASTER

SCALE: NONE

	BY	DATE
DESIGNED		
DRAWN	GST	
CHECKED		
APPROVED		
SUBMITTED		
APPROVED RFP		
APPROVED DOE		

U.S. DEPARTMENT OF ENERGY
ROCKY FLATS AREA OFFICE GOLDEN, COLORADO

Rockwell International
ROCKY FLATS PLANT
ENERGY SYSTEMS GROUP
GOLDEN, COLORADO 80402

881 Hillside Remedial Action

NOTES AND LEGENDS

SIZE	DRAWING NUMBER	ISSUE	SHEET
D	38548-X03		3 OF 35

ENGINEERING-SCIENCE
Denver, Colorado

ES

COMPUTER GENERATED DRAWING NO MANUAL CHANGES ALLOWED

LINE SYMBOLS

- MAIN PROCESS
- SECONDARY PROCESS AND/OR UTILITY
- FLEXIBLE LINE / HOSE
- INSTRUMENT AIR SIGNAL
- INSTRUMENT ELECTRICAL SIGNAL
- INSTRUMENT CAPILLARY
- HYDRAULIC LINE
- ELECTROMAGNETIC OR SONIC SIGNAL
- COMMUNICATION LINK FOR SOFTWARE USEAGE
- MATERIAL TRANSFER (MANUAL OR MECHANICAL)
- NO CONNECTION
- CONNECTIONS
- SIGNAL CONTINUATION TO SHEET
- SIGNAL CONTINUATION FROM SHEET
- DIRECTION OF FLOW
- PROCESS LINE CONTINUATION CONTINUED ON SAME SHEET ON SHEET INDICATED
- DRAWING NO. — FLOW TO OR FROM ANOTHER DRAWING (FULL NUMBER GIVEN IF DWG. OUTSIDE OF THIS PACKAGE)
- A — B — SPEC. BREAK
- 2"-PA-123-L-I — LINE IDENTIFICATION
  - INSULATION (I=HOT) (IC=COLD) (P=PERSONAL PROTECTION)
  - LINE MATERIAL SPECIFICATION
  - LINE NUMBER
  - LINE SERVICE
  - LINE SIZE

LINE MATERIAL SPECIFICATION

CODE	RFP STD.
A	SP-101
B	SP-103
G	SP-102
H	SP-110
I	SP-112
J	SP-118
K	SP-122
KL	KYNAR LINED PIPE
PL	SOLID KYNAR PIPE
T	SP-116
U	SP-201
V	SP-203
W	SP-205
X	SP-210

EQUIPMENT SYMBOLS

- CARTRIDGE TYPE FILTER WITH SUMP
- CENTRIFUGAL PUMP
- ROTARY POSITIVE DISPLACEMENT PUMP

VALVE SYMBOLS

- BALL VALVE
- BUTTERFLY VALVE
- PINCH VALVE
- CHECK VALVE
- DIAPHRAM VALVE
- GATE VALVE
- GLOBE VALVE
- NEEDLE VALVE
- PLUG VALVE
- ANGLE VALVE
- THREE-WAY VALVE
- FOUR-WAY VALVE
- RELIEF VALVE

VALVE OPERATORS

- PISTON OPERATED VALVE
- DIAPHRAM OPERATED VALVE
- MOTOR OPERATED VALVE
- SOLENOID OPERATED VALVE
- CONTROL VALVE
- PRESSURE CONTROL VALVE INTEGRAL SENSING
- PRESSURE CONTROL VALVE EXTERNAL SENSING

INSTRUMENT IDENTIFICATION

FIRST LETTER — LAH 1234 — SUCCEEDING LETTERS

LOOP NUMBER

FIRST LETTER

A	ANALYSIS
B	BURNER/FLAME
C	CONDUCTIVITY
D	DENSITY
E	VOLTAGE
F	FLOW
G	GAGING (DIMENSIONAL)
H	HAND
I	CURRENT
J	POWER
K	TIME
L	LEVEL/PILOT LIGHT
M	MOISTURE
P	PRESSURE
Q	QUANTITY/EVENT
R	RADIOACTIVITY
S	SPEED
T	TEMPERATURE
V	VISCOSITY/VIBRATION
W	WEIGHT
X	UNCLASSIFIED
Z	POSITION

SUCCEEDING LETTERS

A	ALARM
C	CONTROL
D	DIFFERENTIAL
E	PRIMARY ELEMENT
F	RATIO
G	GLASS
H	HIGH
I	INDICATING
J	REMOTE AMPLIFIER
L	PILOT LIGHT/LOW/CLOSED
O	ORIFICE (RESTRICTION)
Q	TOTALIZER
R	RECORD
S	SWITCH
SE	SAFETY ELEMENT
SV	SAFETY VALVE
T	TRANSMITTER
V	VALVE/DAMPER/LOUVER
W	WELL
X	UNCLASSIFIED
Y	TRANSDUCER
Z	FINAL CONTROL DEVICE

MISCELLANEOUS SYMBOLS

- CONCENTRIC REDUCER
- HOSE CONNECTION
- FLANGE
- ORIFICE FLANGE
- QUICK DISCONNECT
- ROTAMETER
- ORIFICE
- STEAM TRAP
- Y-PATTERN STRAINER
- IN-LINE STRAINER (B = BASKET) (C = CONE) (P = PLATE)
- SIGHT GLASS
- SIGHT GLASS WITH PROPELLER
- CHEMICAL SEAL
- FLAME ARRESTOR
- RUPTURE DISK
- RUPTURE DISK VACUUM SUPPORTED
- SPRAY NOZZLE
- SP / XX — SPECIALTY ITEM
- POP-OFF PRESSURE RELIEF CAP
- FLOWMETER
- FLOAT

ABBREVIATIONS

AOV	AIR OPERATED VALVE
ATM	ATMOSPHERE
BF	BOTTOM FLAT
BOP	BOTTOM OR BACK OF PIPE
CAAM	CONTINUOUS AIR ALARM MONITOR
CD	CRITICALITY DRAIN
CONC	CONCENTRIC
CRT	CATHODE RAY TUBE
CSC	CAR SEAL CLOSE
CSO	CAR SEAL OPEN
EL	ELEVATION
ELL	ELBOW
EOL	ELBOLET
ET	ELECTRIC TRACE
EV	SOLENOID VALVE (AOV SERVICE)
FC	FAIL CLOSE
FF	FLAT FACE
FIN	FINISH
FL	FAIL LAST
FLG	FLANGE
FLR	FLOOR
FO	FAIL OPEN
HPFF	HIGH POINT OF FINISH FLOOR
HPP	HEALTH PHYSICS SAMPLE POINT
IA	INSTRUMENT AIR
ID	INNER DIAMETER
I/P	CURRENT OR PNEUMATIC
LB	LINE BLIND
LC	LOCKED CLOSE
LG	LEVEL GAGE
LO	LOCKED OPEN
NC	NORMALLY CLOSED
NIC	NOT IN CONTRACT
NO	NORMALLY OPEN
OD	OUTER DIAMETER
PSE	RUPTURE DISK
RED	REDUCER
RM	ROOM
SB	SPECTACLE BLIND
SC	SAMPLE CONNECTION
SCRD	SCREWED
SG	SIGHT GLASS
SO	STEAM OUT
SOL	SOCKOLET
SS	STAINLESS STEEL
ST	STEAM TRACED
SWG	SEWAGE
THR	THREADED
TOL	THREADOLET
TOS	TOP OF STEEL
TYP	TYPICAL
WC	WATER COLUMN

EQUIPMENT IDENTIFICATION

9 / 123A — EQUIPMENT IDENTIFIER; IDENTICAL UNIT; EQUIPMENT NUMBER

EQUIPMENT IDENTIFIER

D	TANK
E	EXCHANGER (ALL TYPES)
FL	FILTER
GB	GLOVE BOX
K	SPRAY HOOD
MD	MEASURING DEVICE
ME	MISCELLANEOUS EQUIPMENT
P	PUMP
T	TOWER
W	DRYER

LINE SERVICE (REF. SP-303)

ALN	ALUMINUM NITRATE
CNS	CONDENSATE, STEAM
CNSP	CONDENSATE, STEAM (PUMPED)
CWS	COOLING WATER SUPPLY
CWR	COOLING WATER RETURN
DCW	DOMEATIC COLD WATER
DHW	DOMESTIC HOT WATER
FS	FERROUS SULFAMATE
HF	HYDROFLUORIC ACID
HV	HIGH VACUUM
IA	INSTRUMENT AIR
NA	NITRIC ACID
PA	PLANT AIR
PCW	PROCESS COLD WATER
PCWS	PROCESS COOLING WATER SUPPLY
PCWR	PROCESS COOLING WATER RETURN
PL	PROCESS LIQUID
PV	PROCESS VACUUM
PW	PROCESS WASTE
PWV	PROCESS WASTE VENT
PWP	PROCESS WASTE (PUMPED)
RW	RAW WATER
SA	SULFURIC ACID
STM	STEAM
V	VENT

INSTRUMENT SYMBOLS

- LOCAL MOUNTED
- MAIN BOARD MOUNTED
- BEHIND MAIN BOARD MOUNTED
- LOCAL BOARD MOUNTED
- BEHIND LOCAL BOARD MOUNTED
- PILOT LIGHT
- TWO OR MORE MOUNTED IN THE SAME CASE
- INTERLOCK
- CRT SHARED DISPLAY, SHARED CONTROL
- PROGRAMMABLE CONTROLLER OR LOGIC SEQUENCER
- LIGHTED LOGIC SEQUENCER
- PHOTOELECTRIC PROXIMITY DETECTOR

FOR TITLE II REVIEW NOT FOR CONSTRUCTION

ISSUE	DESCRIPTION	DATE	RFP	DOE	CLASS	JOB NO.
A	ORIGINAL ISSUE					986147

KEYWORDS

TOLERANCES FRACT. ±	DESIGNED	BY	DATE
ANGLE ±	DRAWN	SST	
DEC. ± UNLESS NOTED OTHERWISE	CHECKED		
REMOVE BURRS AND SHARP EDGES	APPROVED		
NEXT ASSEMBLY			
	SUBMITTED		
MASTER	SCALE: NONE	APPROVED RFP / APPROVED DOE	

U.S. DEPARTMENT OF ENERGY
ROCKY FLATS AREA OFFICE GOLDEN, COLORADO

Rockwell International
ROCKY FLATS PLANT
ENERGY SYSTEMS GROUP
GOLDEN, COLORADO 80402

881 Hillside Remedial Action
P & ID LEGEND AND SYMBOLS

SIZE	DRAWING NUMBER	ISSUE	SHEET
D	38548-001		4 OF 35

ENGINEERING-SCIENCE
Denver, Colorado
ES

COMPUTER GENERATED DRAWING NO MANUAL CHANGES ALLOWED

ROCKWELL INTERNATIONAL

ROCKY FLATS PLANT

881 Hillside Remedial Action
Ground Water Collection,
Treatment and Reinjection System

FACILITIES ENGINEERING
Golden, Colorado 80402-0464

INDEX OF DRAWINGS

GENERAL

38548-X01	TITLE SHEET AND INDEX
38548-X02	AREA PLOT PLAN
38548-X03	NOTES AND LEGEND

P&ID

38548-001	P&ID LEGEND AND SYMBOLS
38548-002	P&ID
38548-003	P&ID
38548-004	P&ID

CIVIL

38548-100	GENERAL SITE PLAN
38548-101	FRENCH DRAIN PLAN/PROFILE
38548-102	FRENCH DRAIN PLAN/PROFILE
38548-103	INFLUENT PIPELINE PLAN
38548-104	EFFLUENT PIPELINE PLAN/PROFILE
38548-105	INFILTRATION GALLERY PLAN/PROFILE
38548-106	FRENCH DRAIN COLLECTION SUMP
38548-107	BUILDING 881 FOUNDATION DRAIN SUMP
38548-108	COLLECTION WELL
38548-109	CIVIL DETAILS AND SECTIONS

ARCHITECTURAL

38548-200	BUILDING 830 FLOOR PLAN & ELEVATIONS
38548-201	BUILDING 830 INTERIOR ELEVATIONS

STRUCUTRAL

38548-300	TANK FOUNDATION AND BERM
38548-301	BUILDING 830 PLAN, SECTIONS AND STRUCTURAL NOTES
38548-302	STRUCTURAL DETAILS

PIPING

38548-400	TRANSFER PIPING PLAN
38548-401	TRANSFER PIPING SECTIONS

MECHANICAL

38548-500	BUILDING 830 EQUIPMENT LOCATION PLAN
38548-501	BUILDING 830 EQUIPMENT LOCATION SECTIONS
38548-502	BUILDING 830 EQUIPMENT LOCATION DETAILS
38548-503	BUILDING 830 HAVC AND PLUMBING PLAN
38548-504	MECHANICAL DETAILS

ELECTRICAL

38548-700	ELECTRICAL SYMBOLS AND LIGHTING FIXTURE SCHEDULE
35848-701	ELECTRICAL SITE PLAN, DETAILS AND POWER FEEDER PLAN
35848-702	BUILDING 830 SINGLE LINE DIAGRAM AND CONTROL WIRING DIAGRAMS
35848-703	BUILDING 830 ELECTRICAL PLANS
35848-704	BUILDING 830 AND STORAGE TANKS ELECTRICAL PLANS
35848-705	CONDUIT AND WIRE SCHEDULE AND PANEL SCHEDULE

FOR TITLE II REVIEW NOT FOR CONSTRUCTION

ISSUE	DESCRIPTION	DATE	RFP	DOE CLASS	JOB NO
A	ORIGINAL ISSUE				986147

KEYWORDS

TOLERANCES: FRACT. ± ; ANGLE ± ; DEC. ± ; UNLESS NOTED OTHERWISE ; REMOVE BURRS AND SHARP EDGES ; NEXT ASSEMBLY

	BY	DATE
DESIGNED		
DRAWN	SST	
CHECKED		
APPROVED		
SUBMITTED		
APPROVED REP		
APPROVED DOE		

MASTER

SCALE: NONE

U.S. DEPARTMENT OF ENERGY
ROCKY FLATS AREA OFFICE GOLDEN, COLORADO

Rockwell International
ROCKY FLATS PLANT
ENERGY SYSTEMS GROUP
GOLDEN, COLORADO 80402

881 Hillside Remedial Action
Index and Title Sheet

SIZE	DRAWING NUMBER	ISSUE	SHEET
D	38548-X01		1 of 35

ENGINEERING-SCIENCE
Denver, Colorado

ES

COMPUTER GENERATED DRAWING NO MANUAL CHANGES ALLOWED

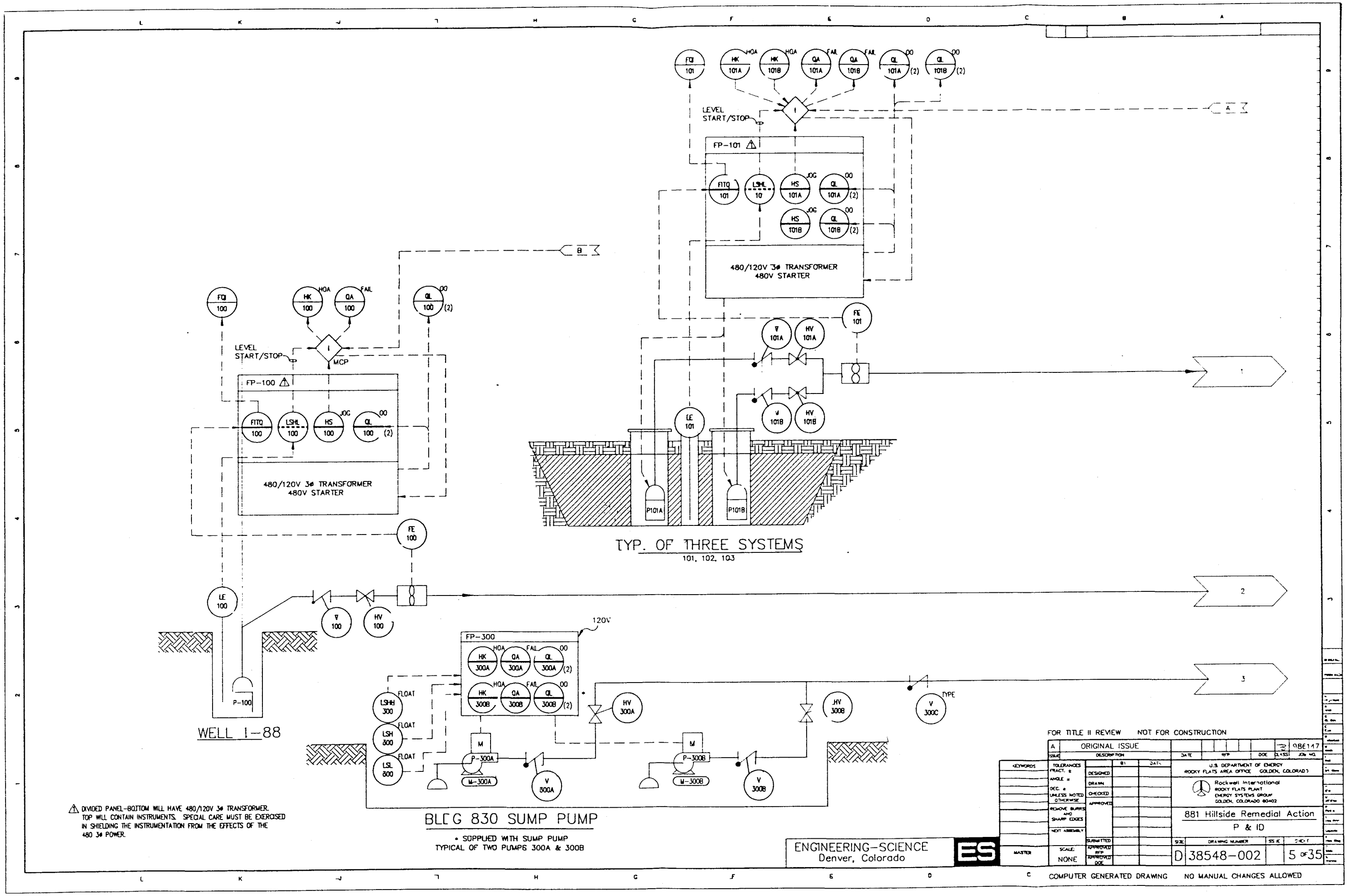

⚠ DIVIDED PANEL-BOTTOM WILL HAVE 480/120V 3ø TRANSFORMER. TOP WILL CONTAIN INSTRUMENTS. SPECIAL CARE MUST BE EXERCISED IN SHIELDING THE INSTRUMENTATION FROM THE EFFECTS OF THE 480 3ø POWER.

FOR TITLE II REVIEW NOT FOR CONSTRUCTION

ISSUE	DESCRIPTION	DATE	RFP	DOC	CLASS	JOB NO.
A	ORIGINAL ISSUE					986147

KEYWORDS

TOLERANCES FRACT. ± ANGLE ± DEC. ± UNLESS NOTED OTHERWISE

REMOVE BURRS AND SHARP EDGES

NEXT ASSEMBLY

MASTER

SCALE: NONE

DESIGNED / DRAWN / CHECKED / APPROVED / SUBMITTED / APPROVED RFP / APPROVED DOE

U.S. DEPARTMENT OF ENERGY
ROCKY FLATS AREA OFFICE GOLDEN, COLORADO

Rockwell International
ROCKY FLATS PLANT
ENERGY SYSTEMS GROUP
GOLDEN, COLORADO 80402

881 Hillside Remedial Action

P & ID

SIZE	DRAWING NUMBER	ISSUE	SHEET
D	38548-002		5 OF 35

ENGINEERING-SCIENCE
Denver, Colorado

ES

COMPUTER GENERATED DRAWING NO MANUAL CHANGES ALLOWED

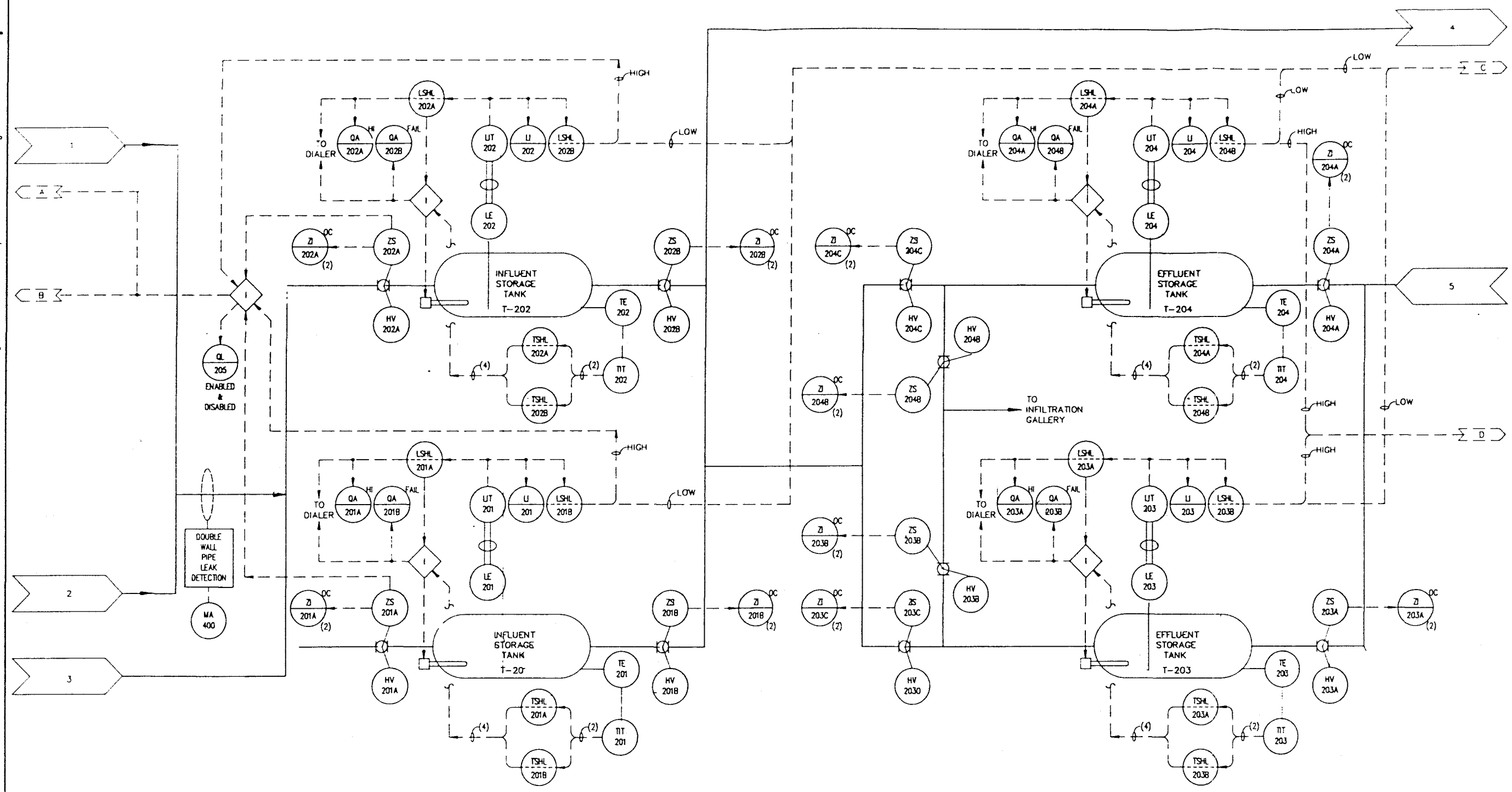

INFLUENT EQUALIZATION

FOR TITLE II REVIEW NOT FOR CONSTRUCTION

ISSUE	DESCRIPTION	DATE	REP	DOE	CLASS	JOB NO.
A	ORIGINAL ISSUE					986147

U.S. DEPARTMENT OF ENERGY
ROCKY FLATS AREA OFFICE GOLDEN, COLORADO

Rockwell International
ROCKY FLATS PLANT
ENERGY SYSTEMS GROUP
GOLDEN, COLORADO 80402

881 Hillside Remedial Action

P & ID

SIZE	DRAWING NUMBER	ISSUE	SHEET
D	38548-003		6 of 35

ENGINEERING-SCIENCE
Denver, Colorado

SCALE: NONE

COMPUTER GENERATED DRAWING NO MANUAL CHANGES ALLOWED

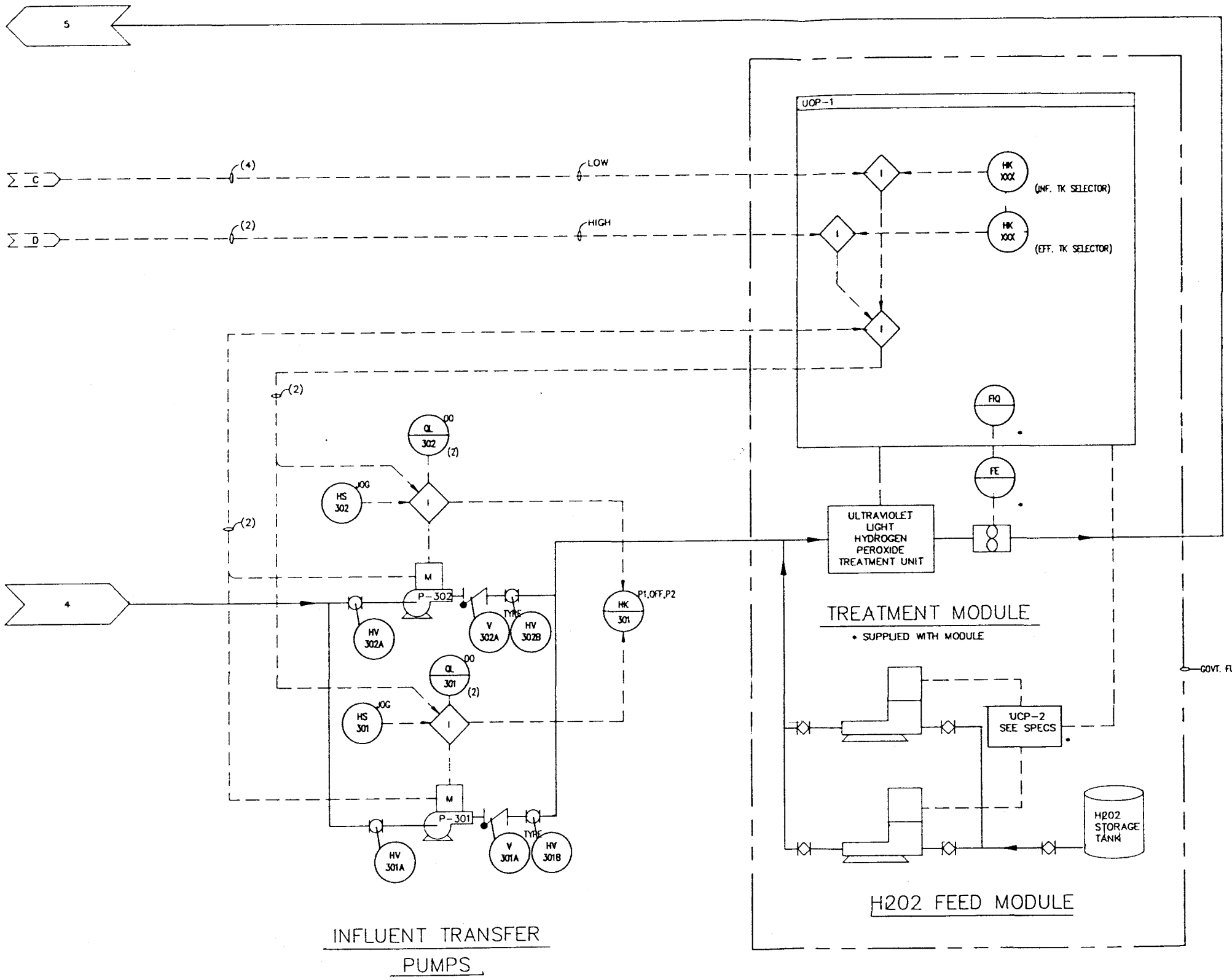

FOR TITLE II REVIEW NOT FOR CONSTRUCTION

ISSUE	DESCRIPTION	DATE	RFP	DOE CLASS	JOB NO.
A	ORIGINAL ISSUE			772	986147

KEYWORDS

TOLERANCES FRACT. ± ANGLE ± DEC. ± UNLESS NOTED OTHERWISE REMOVE BURRS AND SHARP EDGES NEXT ASSEMBLY

	BY	DATE
DESIGNED		
DRAWN		
CHECKED		
APPROVED		
SUBMITTED		
APPROVED RFP		
APPROVED DOE		

MASTER

SCALE: NONE

U.S. DEPARTMENT OF ENERGY
ROCKY FLATS AREA OFFICE GOLDEN, COLORADO

Rockwell International
ROCKY FLATS PLANT
ENERGY SYSTEMS GROUP
GOLDEN, COLORADO 80402

881 Hillside Remedial Action

P & ID

SIZE	DRAWING NUMBER	ISSUE	SHEET
D	38548-004		7 of 35

ENGINEERING-SCIENCE
Denver, Colorado

ES

MAI CAD FILE NO. 10971003.DWG

COMPUTER GENERATED DRAWING NO MANUAL CHANGES ALLOWED

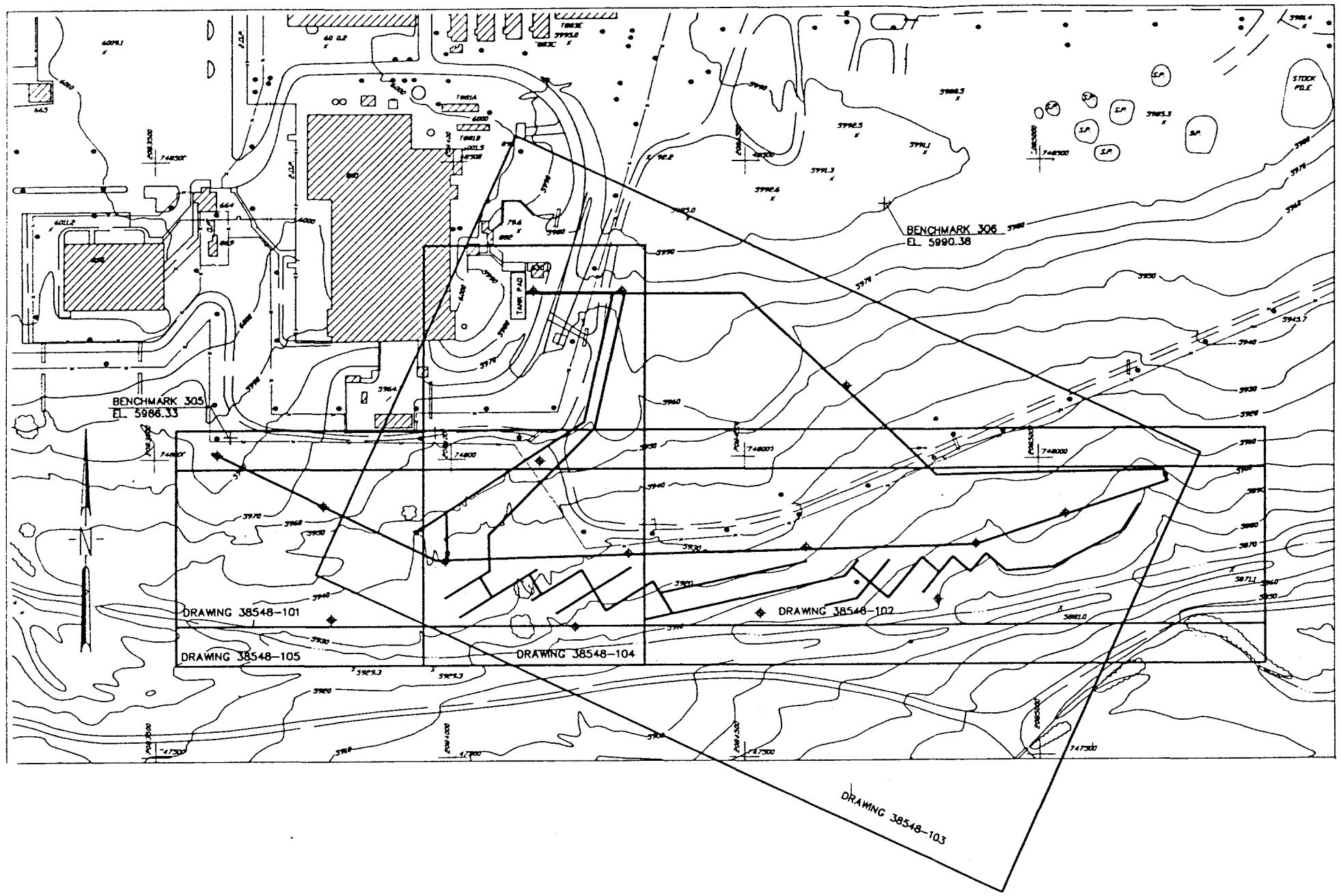

100 FEET

FOR TITLE II REVIEW NOT FOR CONSTRUCTION

ISSUE	DESCRIPTION	DATE	RFP	DOE	CLASS	JOB NO.
A	ORIGINAL ISSUE				TPD	986147

KEYWORDS

TOLERANCES FRACT. ± ANGLE ± DEC. ± UNLESS NOTED OTHERWISE

REMOVE BURRS AND SHARP EDGES

NEXT ASSEMBLY

MASTER

SCALE: 1"=100'

	BY	DATE
DESIGNED		
DRAWN	SST	
CHECKED		
APPROVED		
SUBMITTED		
APPROVED RFP		
APPROVED DOE		

U.S. DEPARTMENT OF ENERGY
ROCKY FLATS AREA OFFICE GOLDEN, COLORADO

Rockwell International
ROCKY FLATS PLANT
ENERGY SYSTEMS GROUP
GOLDEN, COLORADO 80402

881 Hillside Remedial Action

General Site Plan

SIZE	DRAWING NUMBER	ISSUE	SHEET
D	38548-100		8 OF 35

ENGINEERING-SCIENCE
Denver, Colorado

ES

COMPUTER GENERATED DRAWING NO MANUAL CHANGES ALLOWED

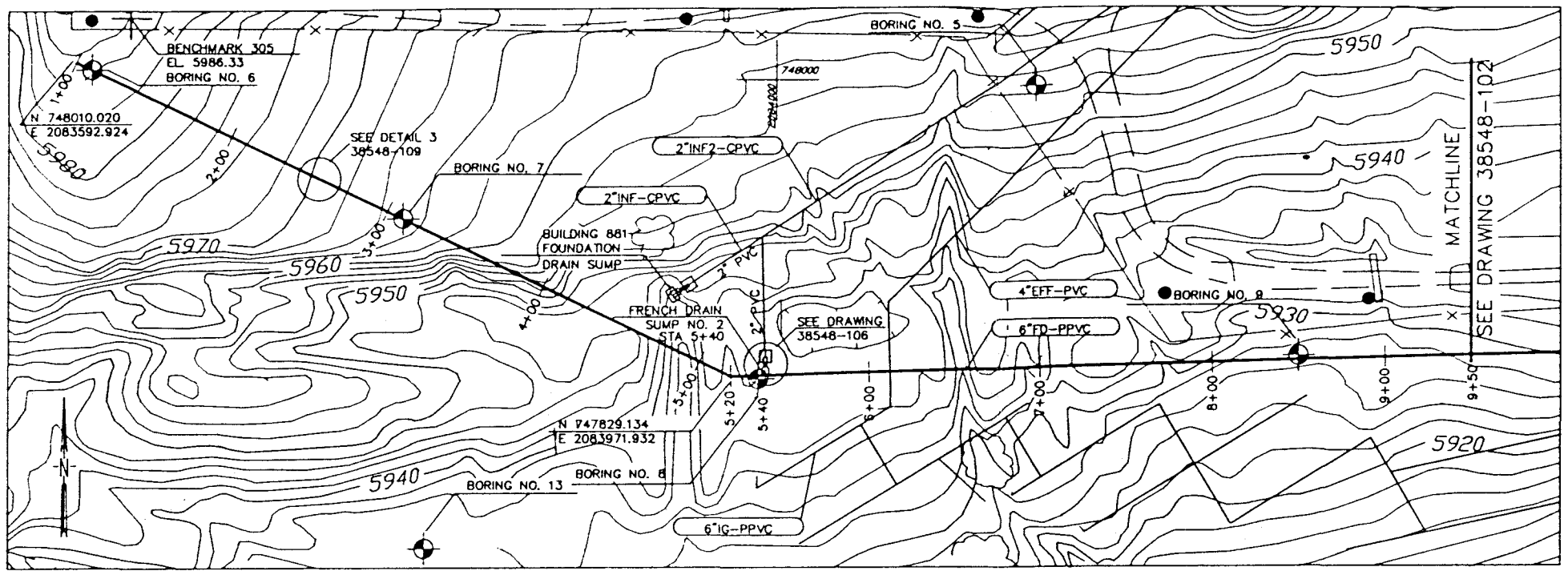

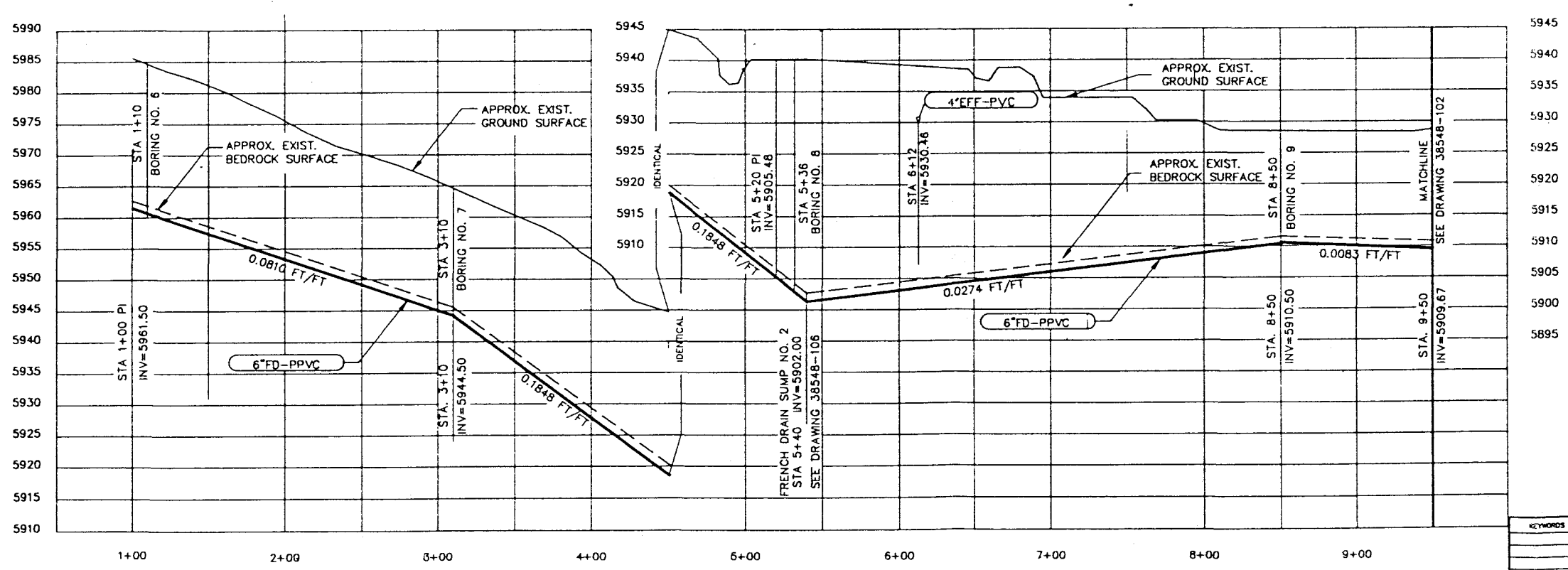

40 FEET

FOR TITLE II REVIEW NOT FOR CONSTRUCTION

ISSUE	DESCRIPTION	DATE	RFP	DOE CLASS	JOB NO.
A	ORIGINAL ISSUE			TS	986147

KEYWORDS

TOLERANCES: FRACT. ± ; ANGLE ± ; DEC. ± ; UNLESS NOTED OTHERWISE ; REMOVE BURRS AND SHARP EDGES ; NEXT ASSEMBLY

	BY	DATE
DESIGNED		
DRAWN	SST	
CHECKED		
APPROVED		
SUBMITTED		
APPROVED RFP		
APPROVED DOE		

MASTER

SCALE: Horiz. 1"=40' Vert. 1"=10'

U.S. DEPARTMENT OF ENERGY
ROCKY FLATS AREA OFFICE GOLDEN, COLORADO

Rockwell International
ROCKY FLATS PLANT
ENERGY SYSTEMS GROUP
GOLDEN, COLORADO 80402

881 Hillside Remedial Action
French Drain Plan/Profile
Station 1+00 to Station 9+50

SIZE	DRAWING NUMBER	ISSUE	SHEET
D	38548-101		9 of 35

ENGINEERING-SCIENCE
Denver, Colorado

ES

COMPUTER GENERATED DRAWING NO MANUAL CHANGES ALLOWED

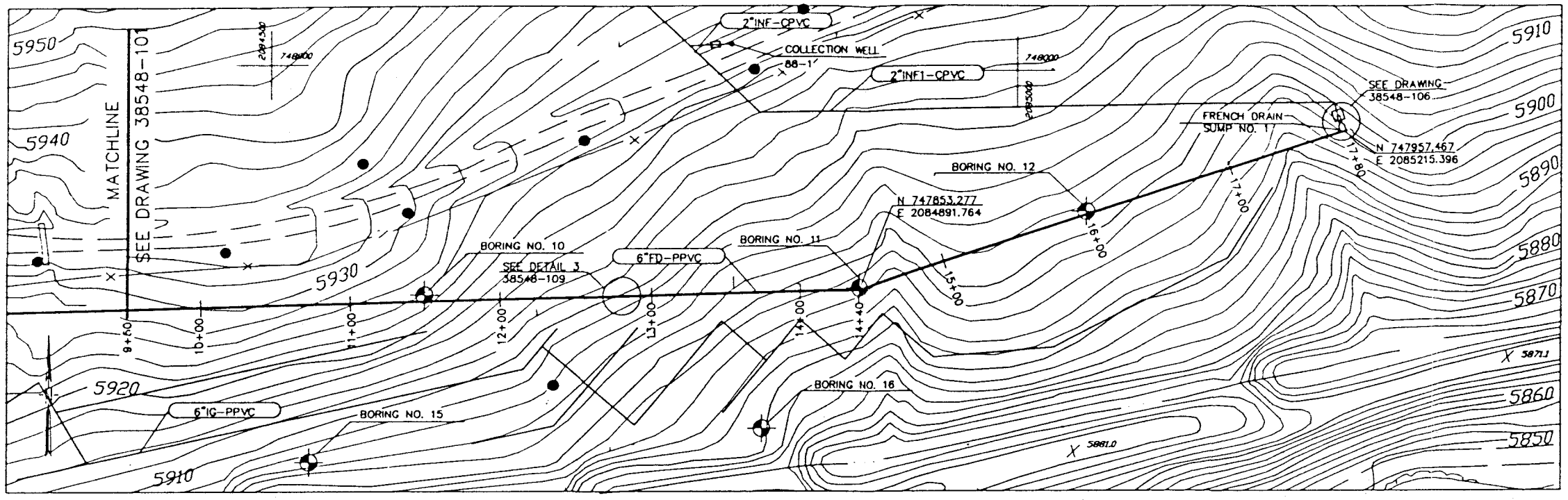

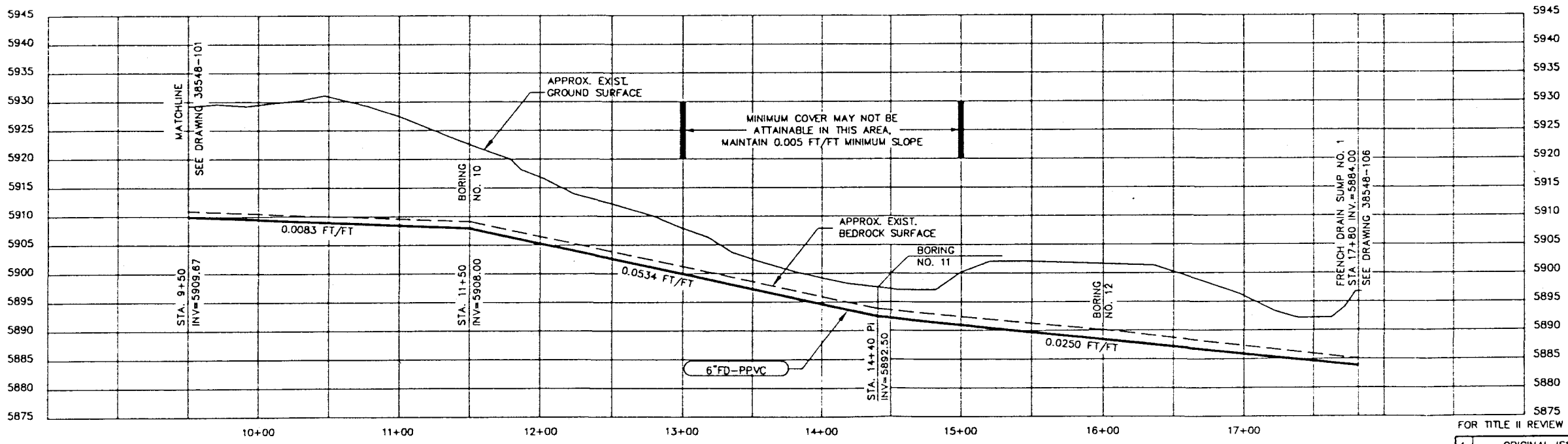

FOR TITLE II REVIEW NOT FOR CONSTRUCTION

ISSUE	DESCRIPTION	DATE	RFP	DOE CLASS	JOB NO.
A	ORIGINAL ISSUE			TPP	986147

	BY	DATE
DESIGNED		
DRAWN	SST	
CHECKED		
APPROVED		
SUBMITTED		
APPROVED RFD		
APPROVED DOE		

KEYWORDS

TOLERANCES FRACT. ± ANGLE ± DEC. ± UNLESS NOTED OTHERWISE

REMOVE BURRS AND SHARP EDGES

NEXT ASSEMBLY

SCALE: Horiz. 1"=40' Vert 1"=10'

MASTER

U.S. DEPARTMENT OF ENERGY
ROCKY FLATS AREA OFFICE GOLDEN, COLORADO

Rockwell International
ROCKY FLATS PLANT
ENERGY SYSTEMS GROUP
GOLDEN, COLORADO 80402

881 Hillside Remedial Action
French Drain Plan/Profile
Sta. 9+50 to 17+80

SIZE	DRAWING NUMBER	ISSUE	SHEET
D	38548-102		10 OF 35

ENGINEERING-SCIENCE
Denver, Colorado

COMPUTER GENERATED DRAWING NO MANUAL CHANGES ALLOWED

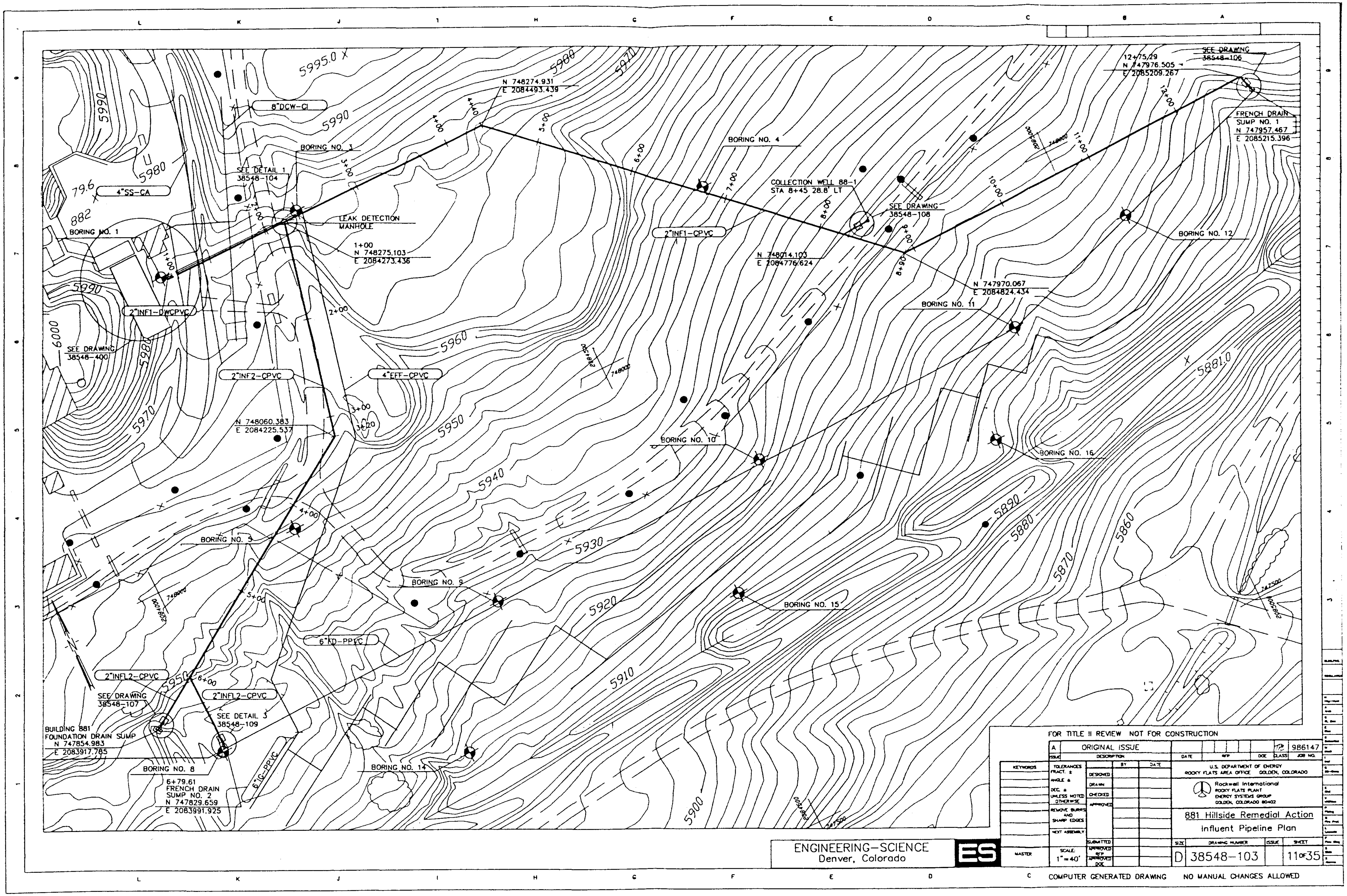
12+75.29
N 747976.505
E 2085209.267
SEE DRAWING
38548-106
FRENCH DRAIN
SUMP NO. 1
N 747957.467
E 2085215.396
BORING NO. 12
BORING NO. 4
COLLECTION WELL 88-1
STA 8+45 28.8' LT
SEE DRAWING
38548-108
N 748014.103
E 2084776.624
N 747970.067
E 2084824.434
BORING NO. 11
BORING NO. 10
BORING NO. 16
BORING NO. 9
BORING NO. 15
BORING NO. 14
BORING NO. 3
BORING NO. 8
BORING NO. 1
N 748274.931
E 2084493.439
8"DCW-CI
4"SS-CA
SEE DETAIL 1
38548-104
LEAK DETECTION
MANHOLE
1+00
N 748275.103
E 2084273.436
2"INF1-DWCPVC
SEE DRAWING
38548-400
2"INF2-CPVC
4"EFF-CPVC
N 748060.383
E 2084225.537
2"INF1-CPVC
6"FD-PPVC
2"INFL2-CPVC
SEE DRAWING
38548-107
2"INFL2-CPVC
SEE DETAIL 3
38548-109
BUILDING 881
FOUNDATION DRAIN SUMP
N 747854.983
E 2083917.785
6+79.61
FRENCH DRAIN
SUMP NO. 2
N 747829.659
E 2083991.925
6"IG-PPVC
5995.0
5990
5980
5970
5960
5950
5940
5930
5920
5910
5900
5890
5880
5870
5860
5881.0
6000
79.6
882
FOR TITLE II REVIEW NOT FOR CONSTRUCTION
A ORIGINAL ISSUE
986147
U.S. DEPARTMENT OF ENERGY
ROCKY FLATS AREA OFFICE GOLDEN, COLORADO
Rockwell International
ROCKY FLATS PLANT
ENERGY SYSTEMS GROUP
GOLDEN, COLORADO 80402
881 Hillside Remedial Action
Influent Pipeline Plan
SCALE: 1"=40'
D 38548-103
11 of 35
ENGINEERING-SCIENCE
Denver, Colorado
ES
COMPUTER GENERATED DRAWING
NO MANUAL CHANGES ALLOWED

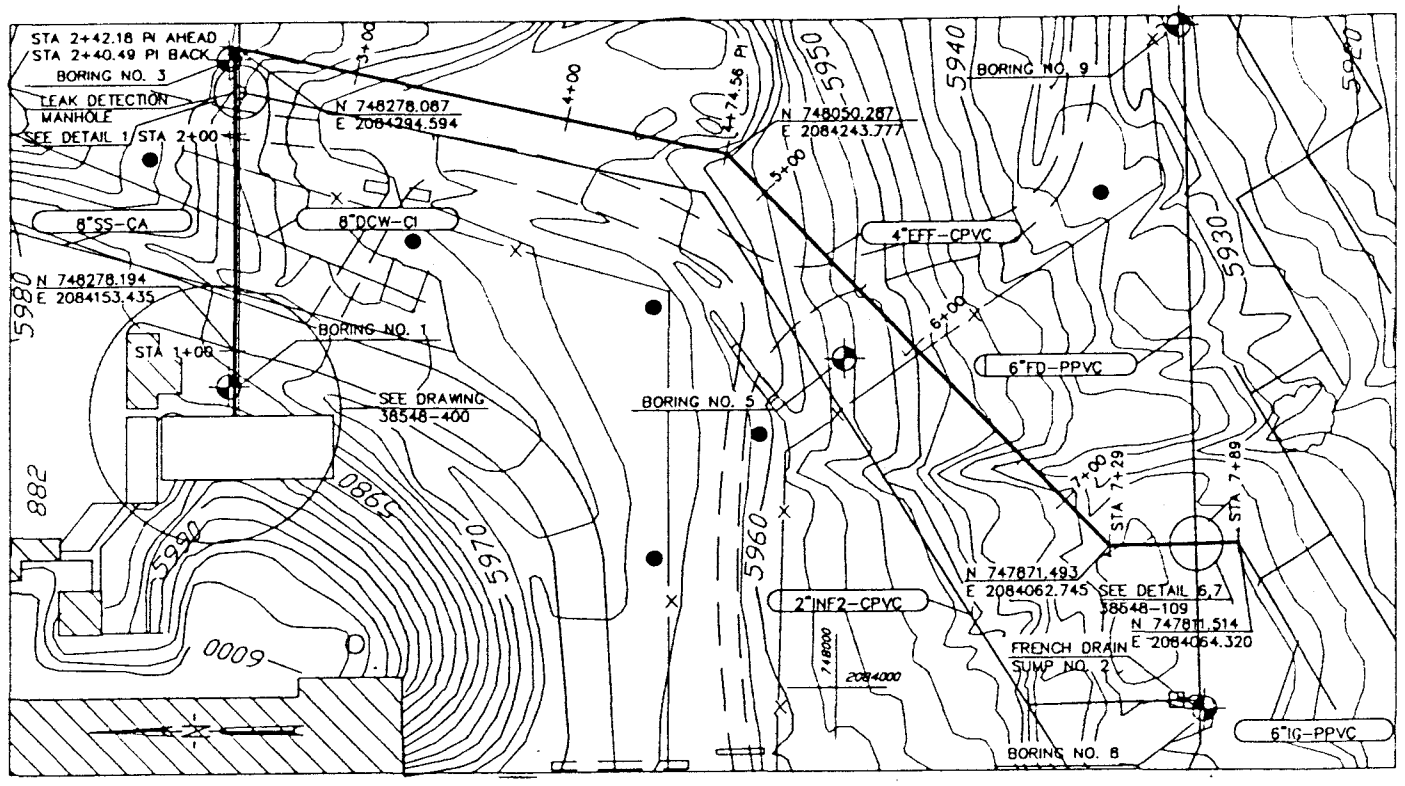

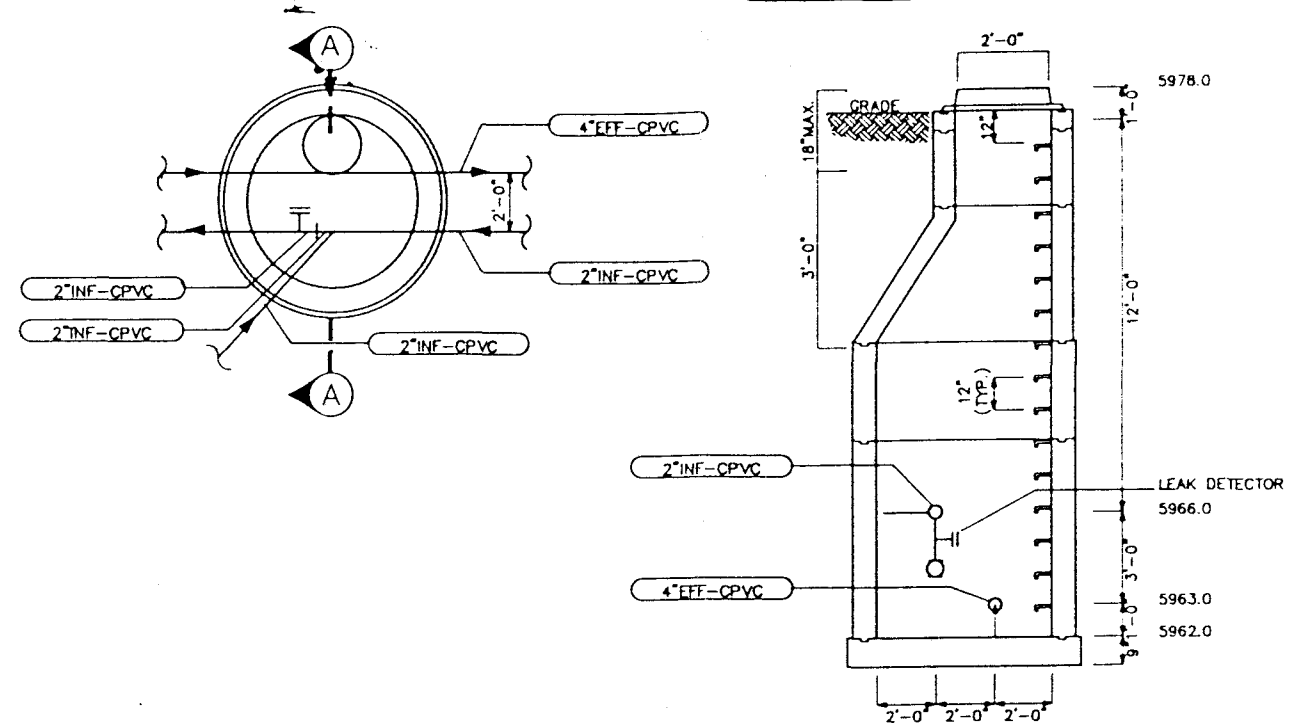

DETAIL 1

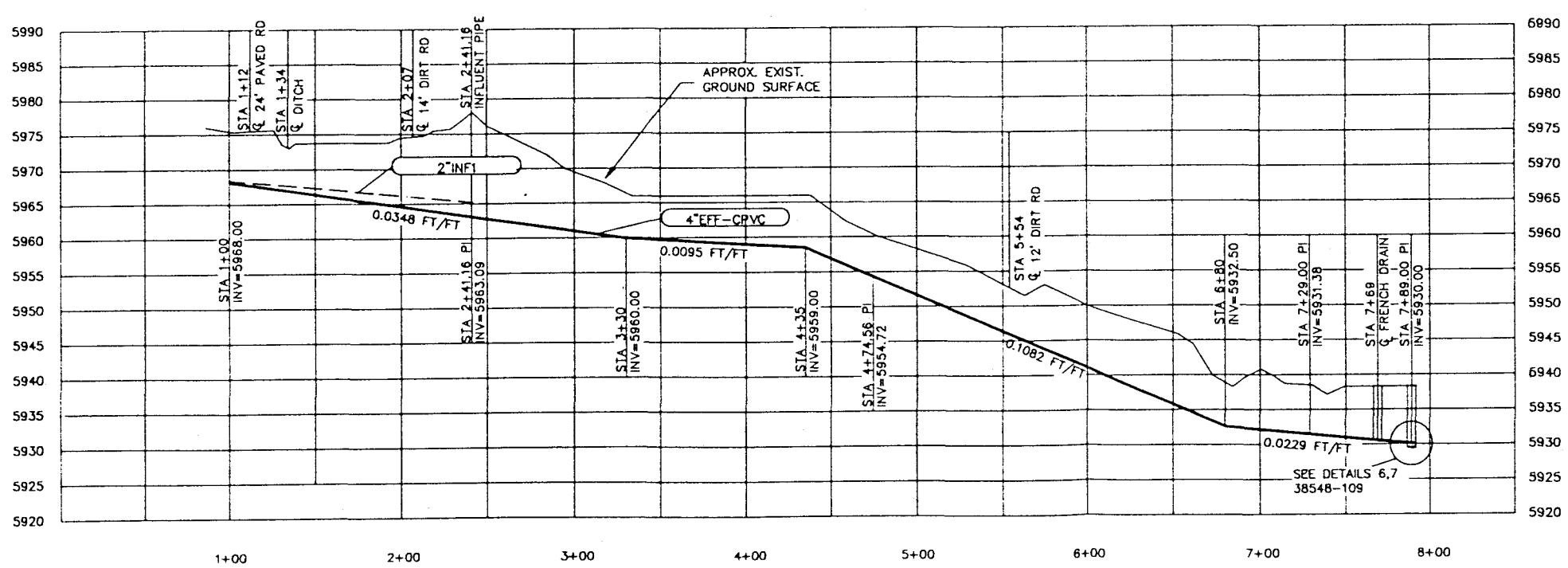

40 FEET

FOR TITLE II REVIEW NOT FOR CONSTRUCTION

ISSUE	DESCRIPTION	DATE	RFP	DOE	CLASS	JOB NO.
A	ORIGINAL ISSUE					986147

KEYWORDS

TOLERANCES FRACT. ± ANGLE ± DEC. ± UNLESS NOTED OTHERWISE

REMOVE BURRS AND SHARP EDGES

NEXT ASSEMBLY

MASTER

SCALE: Horiz. 1"=40' Vert. 1"=10'

	BY	DATE
DESIGNED		
DRAWN	SST	
CHECKED		
APPROVED		
SUBMITTED		
APPROVED RFP		
APPROVED DOE		

U.S. DEPARTMENT OF ENERGY
ROCKY FLATS AREA OFFICE GOLDEN, COLORADO

Rockwell International
ROCKY FLATS PLANT
ENERGY SYSTEMS GROUP
GOLDEN, COLORADO 80402

881 Hillside Remedial Action
Effluent Pipeline Plan/Profile

SIZE	DRAWING NUMBER	ISSUE	SHEET
D	38548-104		12 OF 35

ENGINEERING-SCIENCE
Denver, Colorado

ES

COMPUTER GENERATED DRAWING NO MANUAL CHANGES ALLOWED

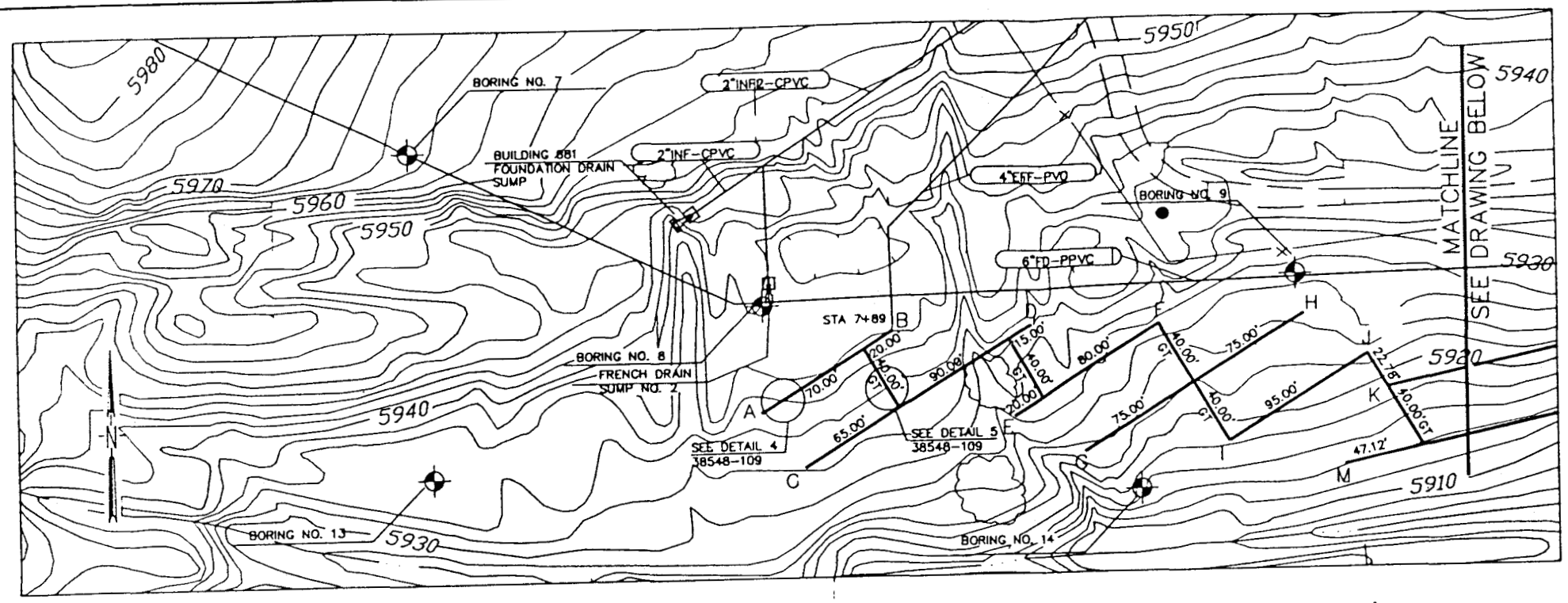

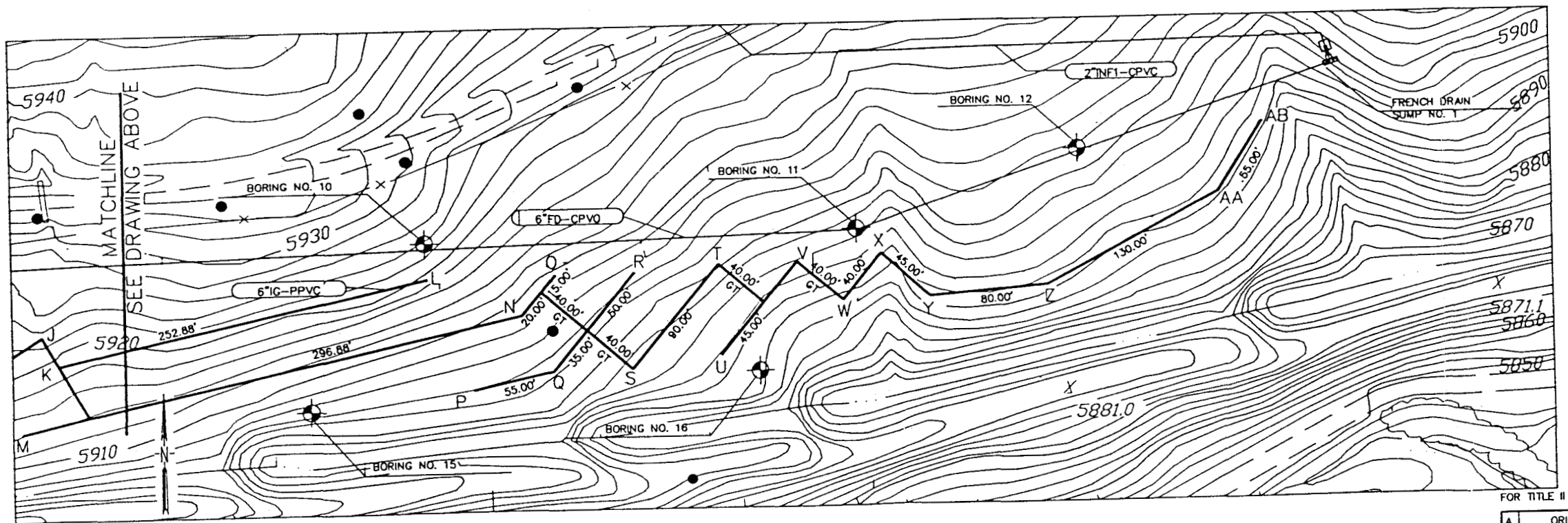

POINT NO.	COORDINATES NORTHING	EASTING	INVERT
A	747,765.161	2,083,987.714	5929.00
B	747,811.514	2,084,064.320	5929.00
C	747,733.449	2,084,012.062	5924.00
D	747,813.280	2,084,144.923	5924.00
E	747,760.967	2,084,135.523	5921.00
F	747,812.471	2,084,221.240	5921.00
G	747,739.556	2,084,177.544	5916.00
H	747,816.812	2,084,306.129	5916.00
I	747,743.897	2,084,262.443	5912.00
J	747,792.826	2,084,343.874	5912.00
K	747,773.296	2,084,355.609	5912.00
L	747,825.874	2,084,602.964	5912.00
M	747,729.213	2,084,330.121	5903.00
N	747,800.735	2,084,666.604	5903.00
O	747,827.367	2,084,680.314	5903.00
P	747,751.932	2,084,633.509	5896.00
Q	747,763.367	2,084,687.307	5896.00
R	747,828.044	2,084,742.460	5896.00
S	747,764.045	2,084,740.453	5891.00
T	747,832.526	2,084,798.851	5891.00
U	747,772.331	2,084,800.088	5886.00
V	747,833.204	2,084,851.997	5886.00
W	747,807.250	2,084,882.433	5883.00
X	747,837.686	2,084,908.388	5883.00
Y	747,808.488	2,084,942.629	5883.00
Z	747,814.826	2,085,022.377	5883.00
AA	747,873.935	2,084,138.162	5883.00
AB	747,920.085	2,085,168.081	5883.00

FOR TITLE II REVIEW NOT FOR CONSTRUCTION

ISSUE	DESCRIPTION	DATE	RFP	DOE	CLASS	JOB NO.
A	ORIGINAL ISSUE					986147

KEYWORDS

TOLERANCES: FRACT. ± ; ANGLE ± ; DEC. ± ; UNLESS NOTED OTHERWISE ; REMOVE BURRS AND SHARP EDGES ; NEXT ASSEMBLY

	BY	DATE
DESIGNED		
DRAWN	SST	
CHECKED		
APPROVED		
SUBMITTED		
APPROVED RFP		
APPROVED DOE		

SCALE: 1" = 40'

MASTER

U.S. DEPARTMENT OF ENERGY
ROCKY FLATS AREA OFFICE GOLDEN, COLORADO

Rockwell International
ROCKY FLATS PLANT
ENERGY SYSTEMS GROUP
GOLDEN, COLORADO 80402

881 Hillside Remedial Action
Infiltration Gallery Plan/Profile

SIZE	DRAWING NUMBER	ISSUE	SHEET
D	38548-105		13 OF 35

ENGINEERING-SCIENCE
Denver, Colorado

COMPUTER GENERATED DRAWING NO MANUAL CHANGES ALLOWED

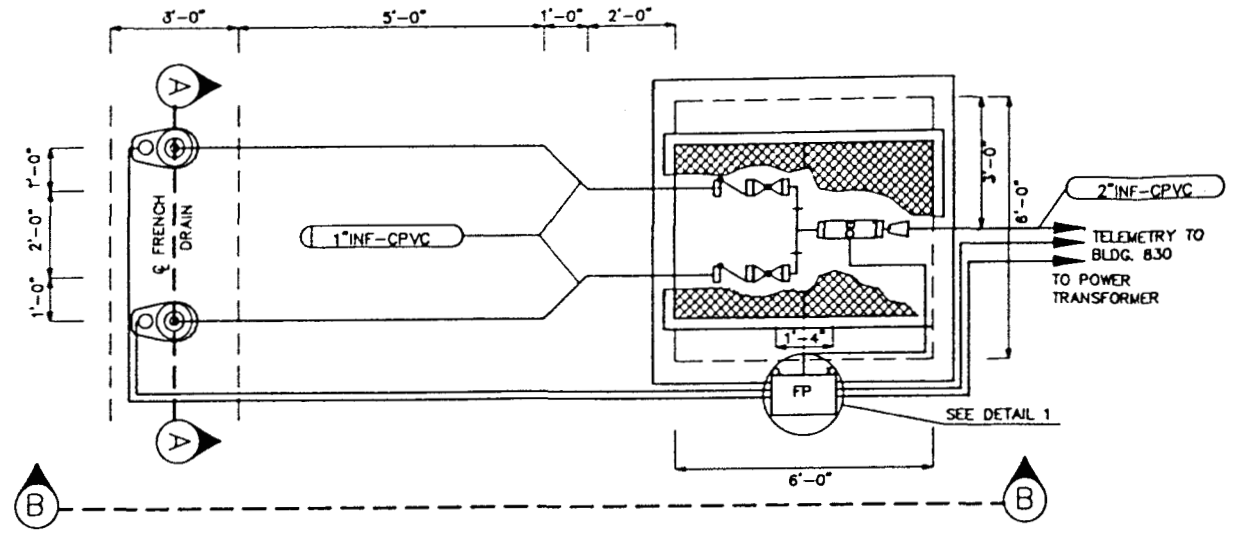

FRENCH DRAIN COLLECTION SUMP AND METER VAULT PLAN VIEW

38548-101,102 NOT TO SCALE

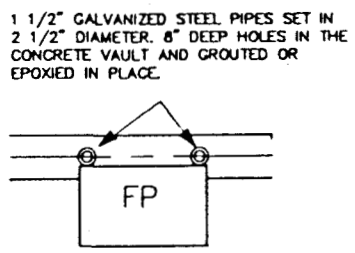

NOTE: SEE DRAWING 38548-XXX FOR ELECTRICAL CONNECTIONS

DETAIL 1

38548-107,108 NOT TO SCALE

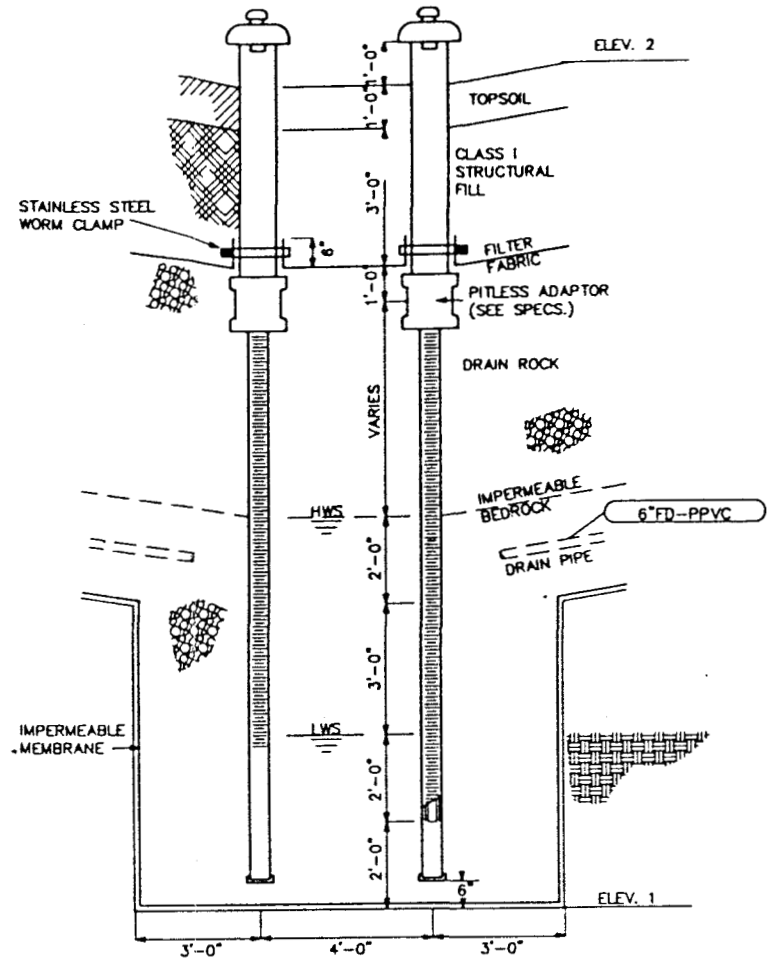

FRENCH DRAIN SUMP	APPROXIMATE ELEVATION			
	HWS (FEET)	LWS (FEET)	ELEV. 1 (FEET)	ELEV. 2 (FEET)
1	5885.00	5880.00	5876.00	5897.00
2	5904.00	5899.00	5895.00	5940.50

FRENCH DRAIN COLLECTION SUMP AND METER VAULT SECTION A-A

38548-101,102 NOT TO SCALE

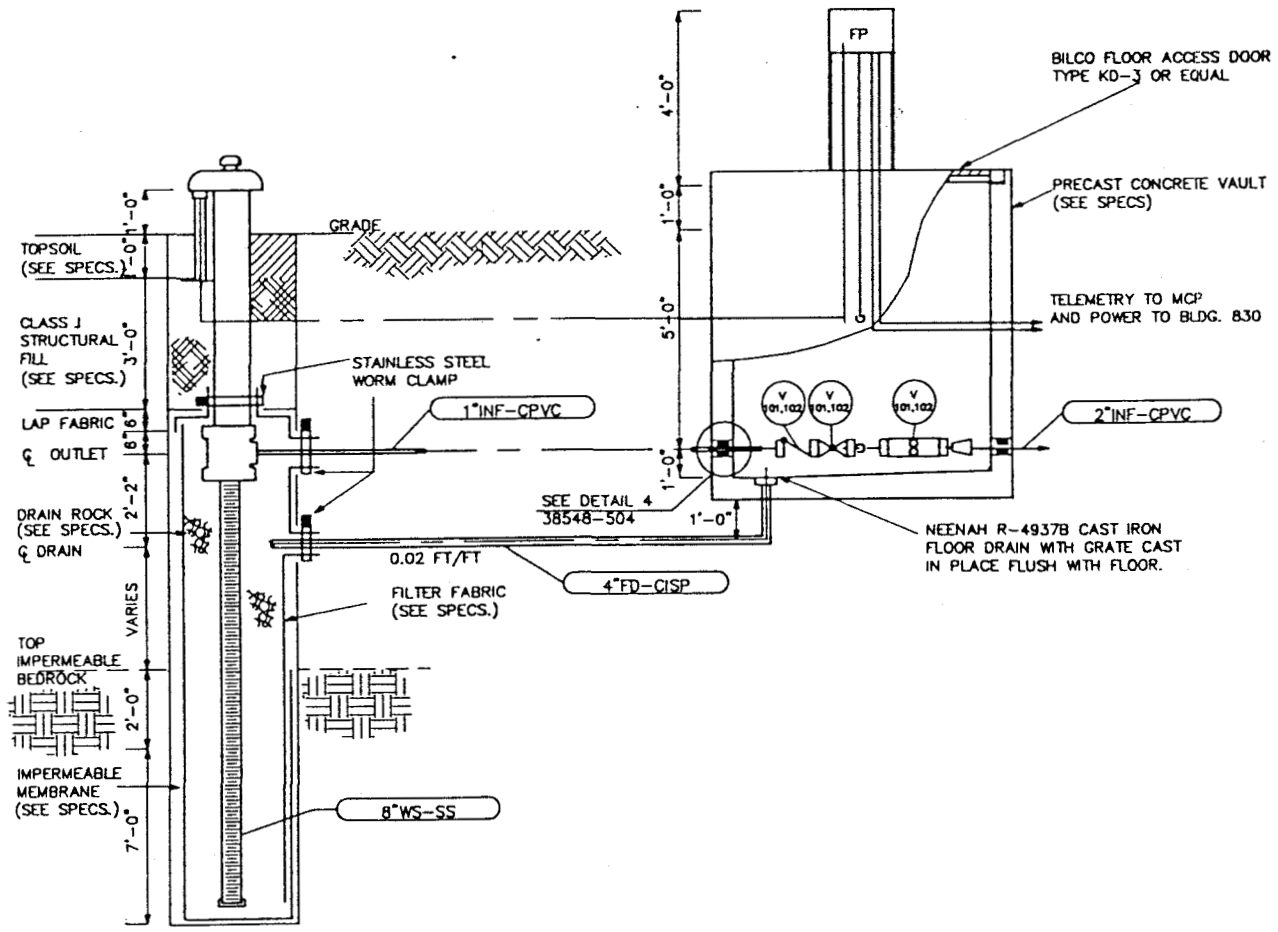

FRENCH DRAIN COLLECTION SUMP AND METER VAULT SECTION B-B

38548-101,102 NOT TO SCALE

FOR TITLE II REVIEW NOT FOR CONSTRUCTION

ISSUE	DESCRIPTION	DATE	RFP	DOE CLASS	JOB NO.
A	ORIGINAL ISSUE			7B	986147

KEYWORDS

TOLERANCES FRACT. ± ANGLE ± DEC. ± UNLESS NOTED OTHERWISE. REMOVE BURRS AND SHARP EDGES. HOT ASSEMBLY

	BY	DATE
DESIGNED		
DRAWN	SST	
CHECKED		
APPROVED		
SUBMITTED		
APPROVED RFP		
APPROVED DOE		

MASTER

SCALE: AS NOTED

U.S. DEPARTMENT OF ENERGY
ROCKY FLATS AREA OFFICE GOLDEN, COLORADO

Rockwell International
ROCKY FLATS PLANT
ENERGY SYSTEMS GROUP
GOLDEN, COLORADO 80402

881 Hillside Remedial Action
French Drain
Collection Sump Details

SIZE	DRAWING NUMBER	ISSUE	SHEET
D	38548-106		14 OF 35

ENGINEERING-SCIENCE
Denver, Colorado

ES

COMPUTER GENERATED DRAWING NO MANUAL CHANGES ALLOWED

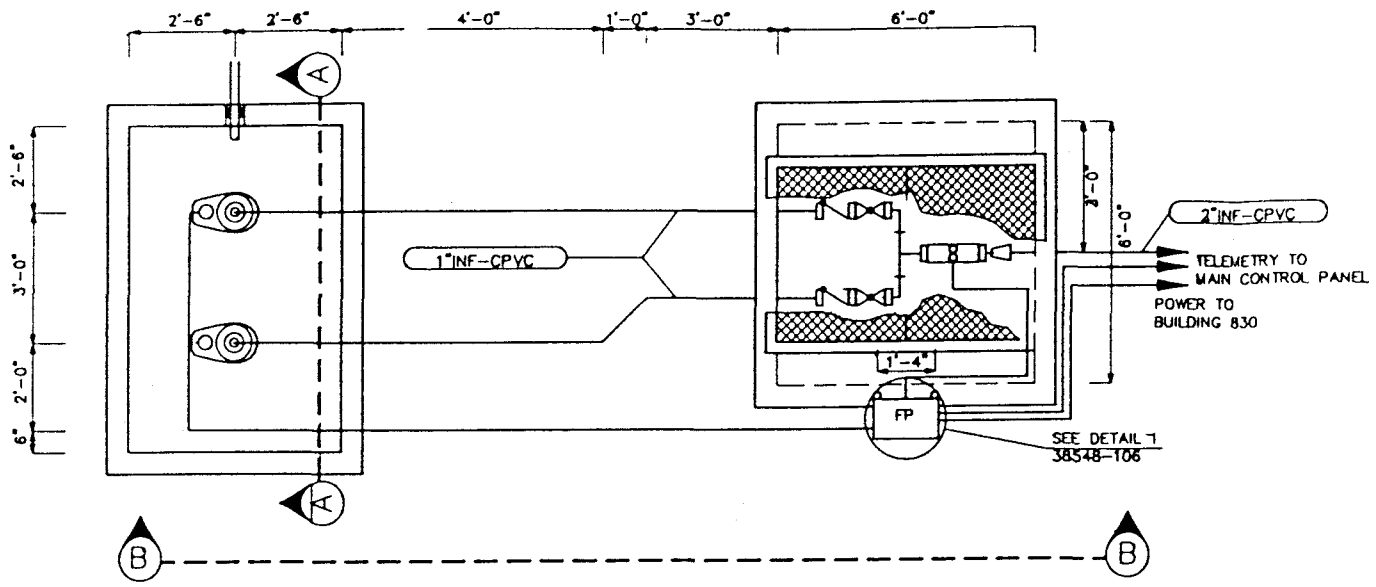

BUILDING 881 FOUNDATION DRAIN
COLLECTION SUMP PLAN VIEW

38548-104 NOT TO SCALE

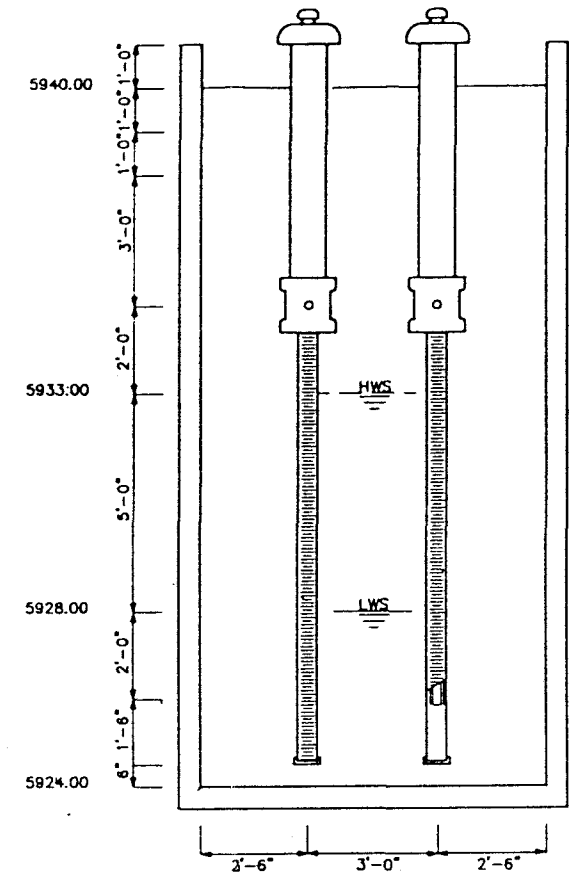

BUILDING 881 FOUNDATION DRAIN
COLLECTION SUMP SECTION A-A

38548-103 NOT TO SCALE

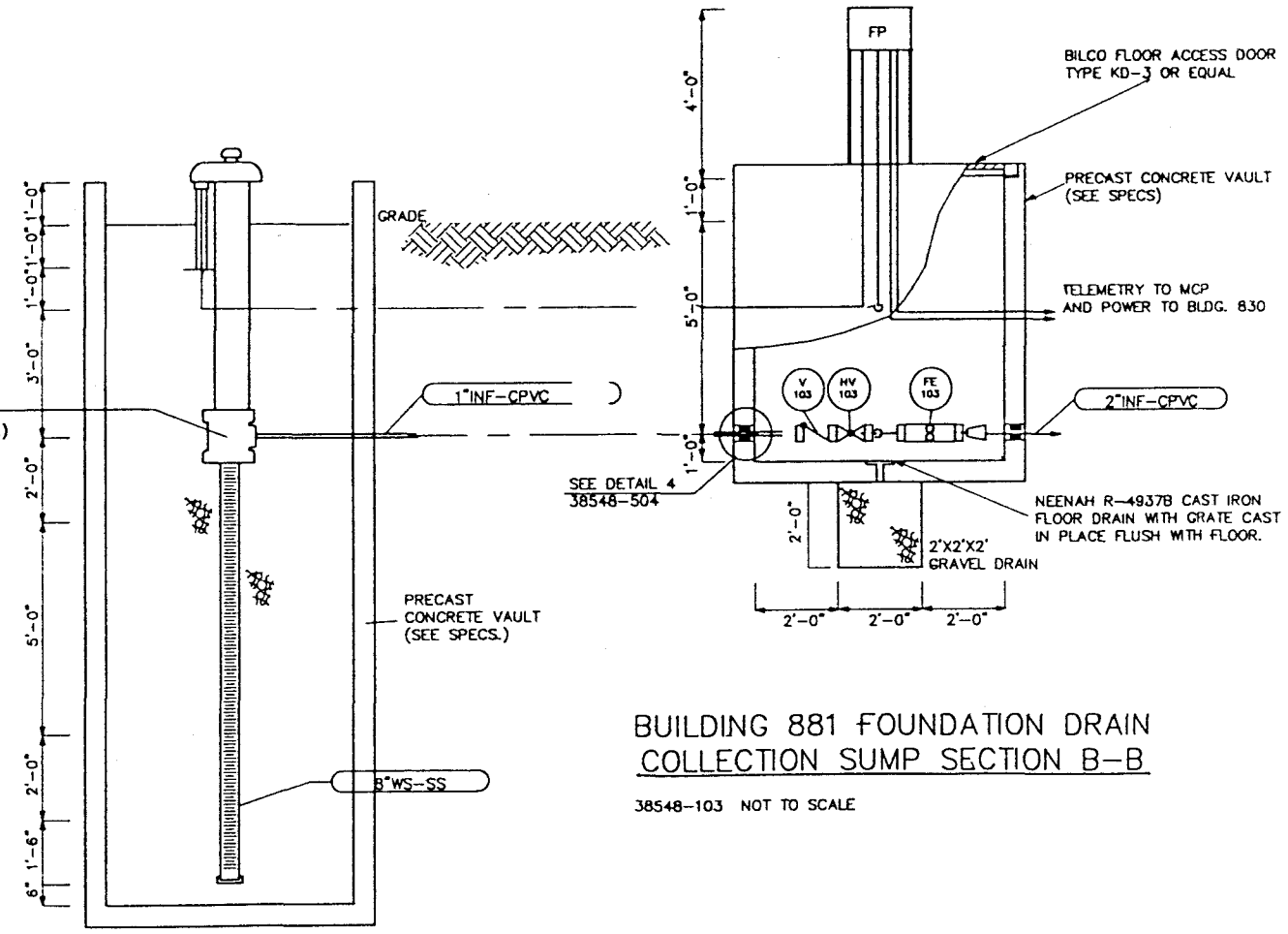

BUILDING 881 FOUNDATION DRAIN
COLLECTION SUMP SECTION B-B

38548-103 NOT TO SCALE

FOR TITLE II REVIEW NOT FOR CONSTRUCTION

ISSUE	DESCRIPTION	DATE	RFP	DOE	CLASS	JOB NO.
A	ORIGINAL ISSUE				-73	986147

	BY	DATE
DESIGNED		
DRAWN	SST	
CHECKED		
APPROVED		
SUBMITTED		
APPROVED RFP		
APPROVED DOE		

KEYWORDS

TOLERANCES FRACT. ± ANGLE ± DEC. ± UNLESS NOTED OTHERWISE

REMOVE BURRS AND SHARP EDGES

NEXT ASSEMBLY

MASTER

SCALE: AS NOTED

U.S. DEPARTMENT OF ENERGY
ROCKY FLATS AREA OFFICE GOLDEN, COLORADO

Rockwell International
ROCKY FLATS PLANT
ENERGY SYSTEMS GROUP
GOLDEN, COLORADO 80402

881 Hillside Remedial Action
Building 881 Foundation Drain
and Meter Vault Details

SIZE	DRAWING NUMBER	ISSUE	SHEET
D	38548-107		15 OF 35

ENGINEERING-SCIENCE
Denver, Colorado

ES

COMPUTER GENERATED DRAWING NO MANUAL CHANGES ALLOWED

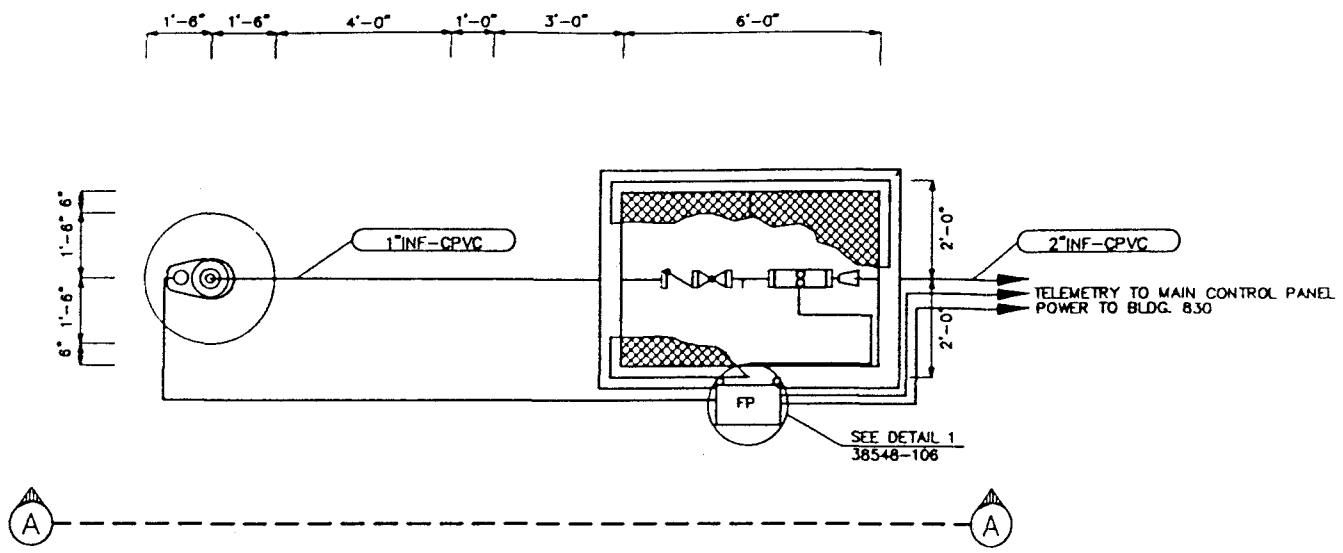

COLLECTION WELL 88-1 AND METER VAULT PLAN VIEW

38548-103 NOT TO SCALE

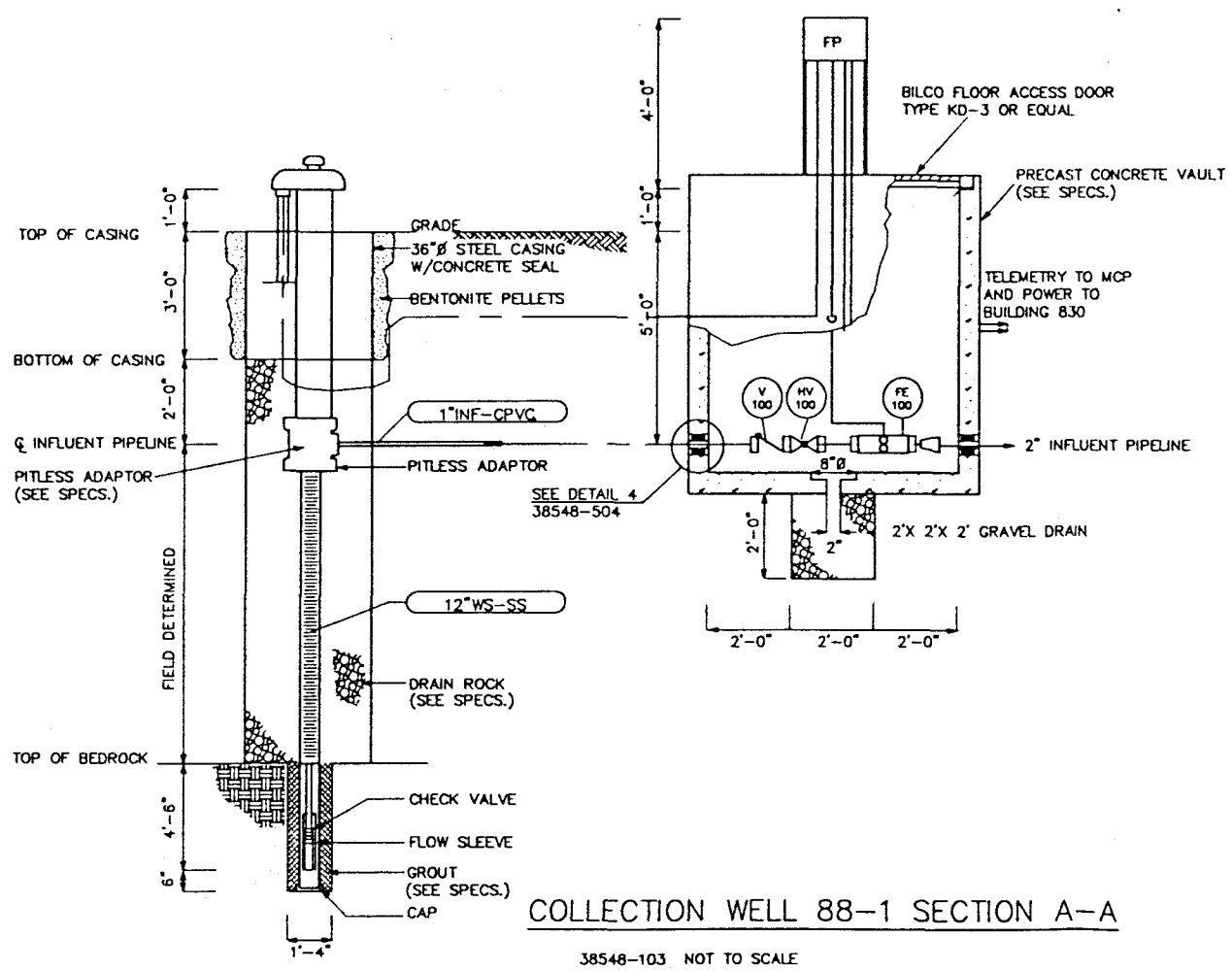

COLLECTION WELL 88-1 SECTION A-A

38548-103 NOT TO SCALE

FOR TITLE II REVIEW NOT FOR CONSTRUCTION

ISSUE	DESCRIPTION	DATE	RFP	DOE CLASS	JOB NO.
A	ORIGINAL ISSUE			7Bi	986147

KEYWORDS

TOLERANCES: FRACT. ± ; ANGLE ± ; DEC. ± UNLESS NOTED OTHERWISE ; REMOVE BURRS AND SHARP EDGES ; NEXT ASSEMBLY

	BY	DATE
DESIGNED		
DRAWN	SST	
CHECKED		
APPROVED		
SUBMITTED		
APPROVED RFP		
APPROVED DOE		

MASTER

SCALE: AS NOTED

U.S. DEPARTMENT OF ENERGY
ROCKY FLATS AREA OFFICE GOLDEN, COLORADO

Rockwell International
ROCKY FLATS PLANT
ENERGY SYSTEMS GROUP
GOLDEN, COLORADO 80402

881 Hillside Remedial Action
Collection Well 88-1
Details

SIZE	DRAWING NUMBER	ISSUE	SHEET
D	38548-108		16 OF 35

ENGINEERING-SCIENCE
Denver, Colorado

ES

COMPUTER GENERATED DRAWING NO MANUAL CHANGES ALLOWED

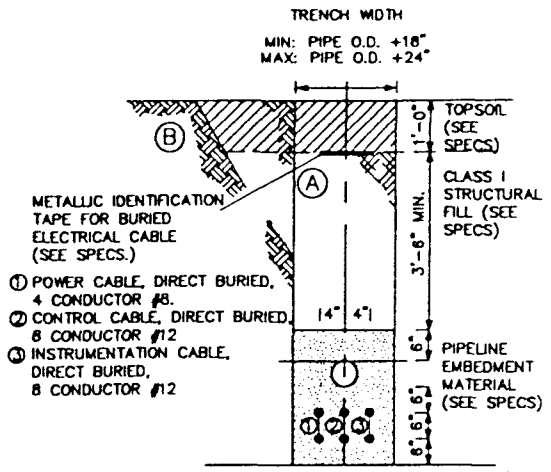

1. ALTERNATE TRENCH SECTIONS (A and B) ARE FOR USE ONLY WHERE STABLE, COMPACT SOIL CONDITIONS EXIST:
   A. Vertical Trench Sidewall Sections (A)
   For depths exceeding 5 feet, shoring or solid sheeting is required. Design calculations by a duly registered Civil Engineer in the State of Colorado and approval by Buyer of support methods are required before construction.
   B. Combination of Vertical and Sloping Sidewalls Section (B)
   For depths exceeding 5 feet, shoring or solid sheeting are required. Design calculations by a duly registered Civil Engineer in the State of Colorado and approval by Buyer of support methods are required before construction.
2. WHERE WET, UNSTABLE, OR RUNNING SOIL IS ENCOUNTERED, SOLID SHEETING IS REQUIRED FOR ALL VERTICAL SIDEWALLS.

DETAIL 1
TYPICAL SECTION

38548-103, 104 NOT TO SCALE

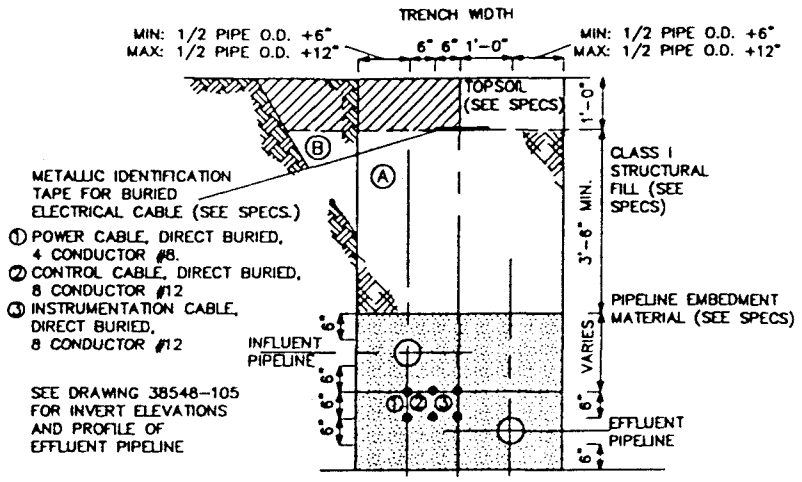

1. ALTERNATE TRENCH SECTIONS (A and B) ARE FOR USE ONLY WHERE STABLE, COMPACT SOIL CONDITIONS EXIST:
   A. Vertical Trench Sidewall Sections (A)
   For depths exceeding 5 feet, shoring or solid sheeting is required. Design calculations by a duly registered Civil Engineer in the State of Colorado and approval by Buyer of support methods are required before construction.
   B. Combination of Vertical and Sloping Sidewalls Section (B)
   For depths exceeding 5 feet, shoring or solid sheeting are required. Design calculations by a duly registered Civil Engineer in the State of Colorado and approval by Buyer of support methods are required before construction.
2. WHERE WET, UNSTABLE, OR RUNNING SOIL IS ENCOUNTERED, SOLID SHEETING IS REQUIRED FOR ALL VERTICAL SIDEWALLS.
3. CONTRACTOR MAY LOWER INFLUENT PIPELINE TO MATCH EFFLUENT PIPELINE ELEVATION. THIS OPTION WILL NOT CONSTITUTE A CHANGE IN CONTRACT PRICE.

DETAIL 2
TYPICAL COMBINATION INFLUENT AND EFFLUENT TRENCH

38548-103, 104 NOT TO SCALE

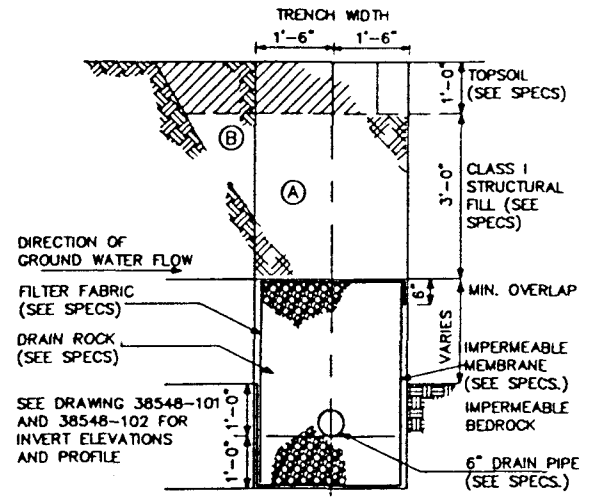

1. ALTERNATE TRENCH SECTIONS (A and B) ARE FOR USE ONLY WHERE STABLE, COMPACT SOIL CONDITIONS EXIST:
   A. Vertical Trench Sidewall Sections (A)
   For depths exceeding 5 feet, shoring or solid sheeting is required. Design calculations by a duly registered Civil Engineer in the State of Colorado and approval by Buyer of support methods are required before construction.
   B. Combination of Vertical and Sloping Sidewalls Section (B)
   For depths exceeding 5 feet, shoring or solid sheeting are required. Design calculations by a duly registered Civil Engineer in the State of Colorado and approval by Buyer of support methods are required before construction.
2. WHERE WET, UNSTABLE, OR RUNNING SOIL IS ENCOUNTERED, SOLID SHEETING IS REQUIRED FOR ALL VERTICAL SIDEWALLS.
3. DEPTH TO IMPERMEABLE BEDROCK SHALL BE ESTABLISHED IN THE FIELD BY AN EXPERIENCED GEOLOGIST OR GEOLOGICAL ENGINEER (BUYER'S REPRESENTATIVE).

DETAIL 3
TYPICAL FRENCH DRAIN TRENCH SECTION

38548-101, 102 NOT TO SCALE

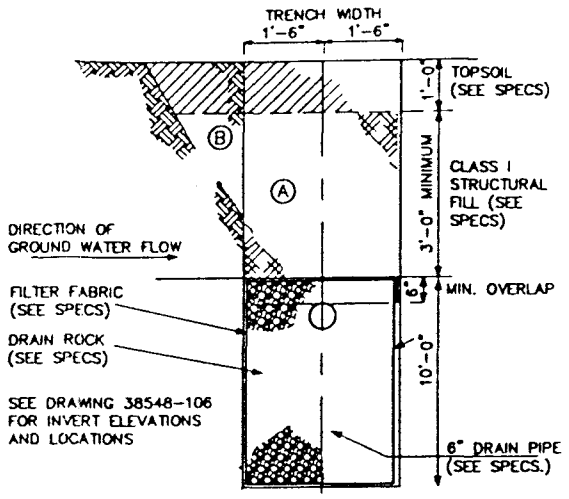

1. ALTERNATE TRENCH SECTIONS (A and B) ARE FOR USE ONLY WHERE STABLE, COMPACT SOIL CONDITIONS EXIST:
   A. Vertical Trench Sidewall Sections
   For depths exceeding 5 feet, shoring or solid sheeting is required. Design calculations by a duly registered Civil Engineer in the State of Colorado and approval by the Owner of support methods are required before construction.
   B. Combination of Vertical and Sloping Sidewalls Section
   For depths exceeding 5 feet, shoring or solid sheeting are required. Design calculations by a duly registered Civil Engineer in the State of Colorado and approval by the Owner of support methods are required before construction.
2. WHERE WET, UNSTABLE, OR RUNNING SOIL IS ENCOUNTERED, SOLID SHEETING IS REQUIRED FOR ALL VERTICAL SIDEWALLS.
3. IF BEDROCK IS ENCOUNTERED BEFORE REQUIRED DEPTH IS REACHED, THE DEPTH OF DRAIN ROCK MAY BE REDUCED WHERE APPROVED BY BUYER.

DETAIL 4
TYPICAL INFILTRATION GALLERY TRENCH SECTION

38548-105 NOT TO SCALE

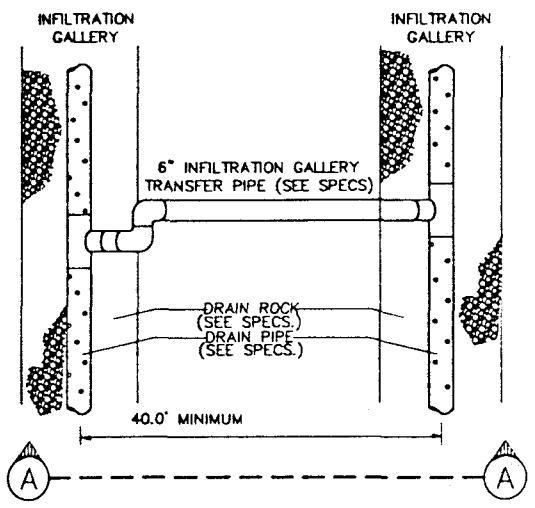

DETAIL 5
PLAN VIEW INFILTRATION GALLERY TRANSFER PIPE CONNECTION DETAIL

38548-105 NOT TO SCALE

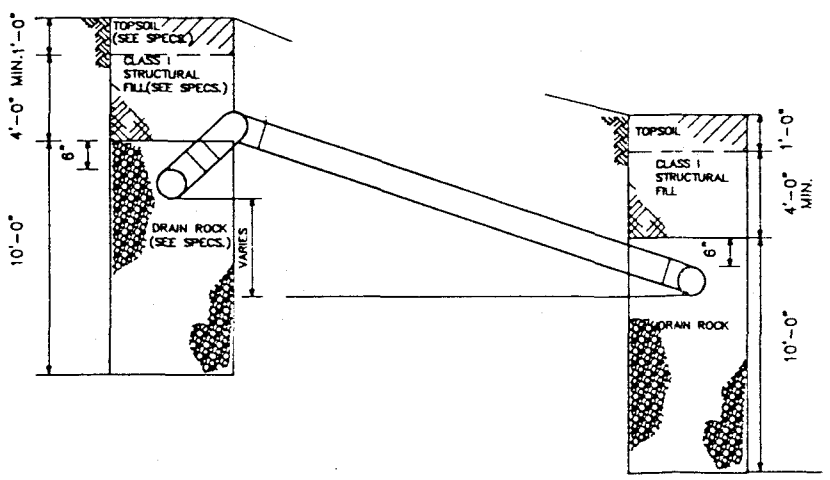

SECTION A-A
DETAIL 5
PLAN VIEW INFILTRATION GALLERY TRANSFER PIPE CONNECTION DETAIL

38548-105 NOT TO SCALE

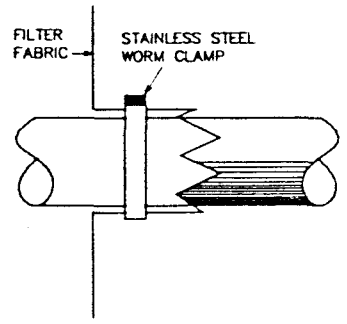

DETAIL 6
PIPE PENETRATION FILTER FABRIC

38548-106, 107, 108, 400, 401 NOT TO SCALE

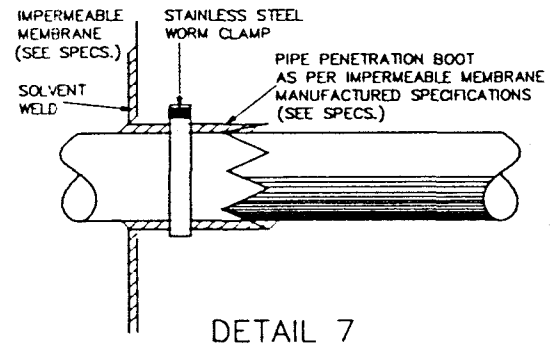

DETAIL 7
PIPE PENETRATION IMPERMEABLE MEMBRANE

38548-104 NOT TO SCALE

FOR TITLE II REVIEW NOT FOR CONSTRUCTION

ISSUE	DESCRIPTION	BY	DATE
A	ORIGINAL ISSUE		

DATE	REP	DOE CLASS	JOB NO.
		TB	986147

KEYWORDS

TOLERANCES FRACT ± ANGLE ± DEC. ± UNLESS NOTED OTHERWISE; REMOVE BURRS AND SHARP EDGES; NEXT ASSEMBLY

	BY	DATE
DESIGNED		
DRAWN	SST	
CHECKED		
APPROVED		
SUBMITTED		
APPROVED REP		
APPROVED DOE		

MASTER

SCALE: AS NOTED

U.S. DEPARTMENT OF ENERGY
ROCKY FLATS AREA OFFICE GOLDEN, COLORADO

Rockwell International
ROCKY FLATS PLANT
ENERGY SYSTEMS GROUP
GOLDEN, COLORADO 80402

881 Hillside Remedial Action
Civil Details

SIZE	DRAWING NUMBER	ISSUE	SHEET
D	38548-109		17 OF 35

ENGINEERING-SCIENCE
Denver, Colorado
ES

COMPUTER GENERATED DRAWING NO MANUAL CHANGES ALLOWED

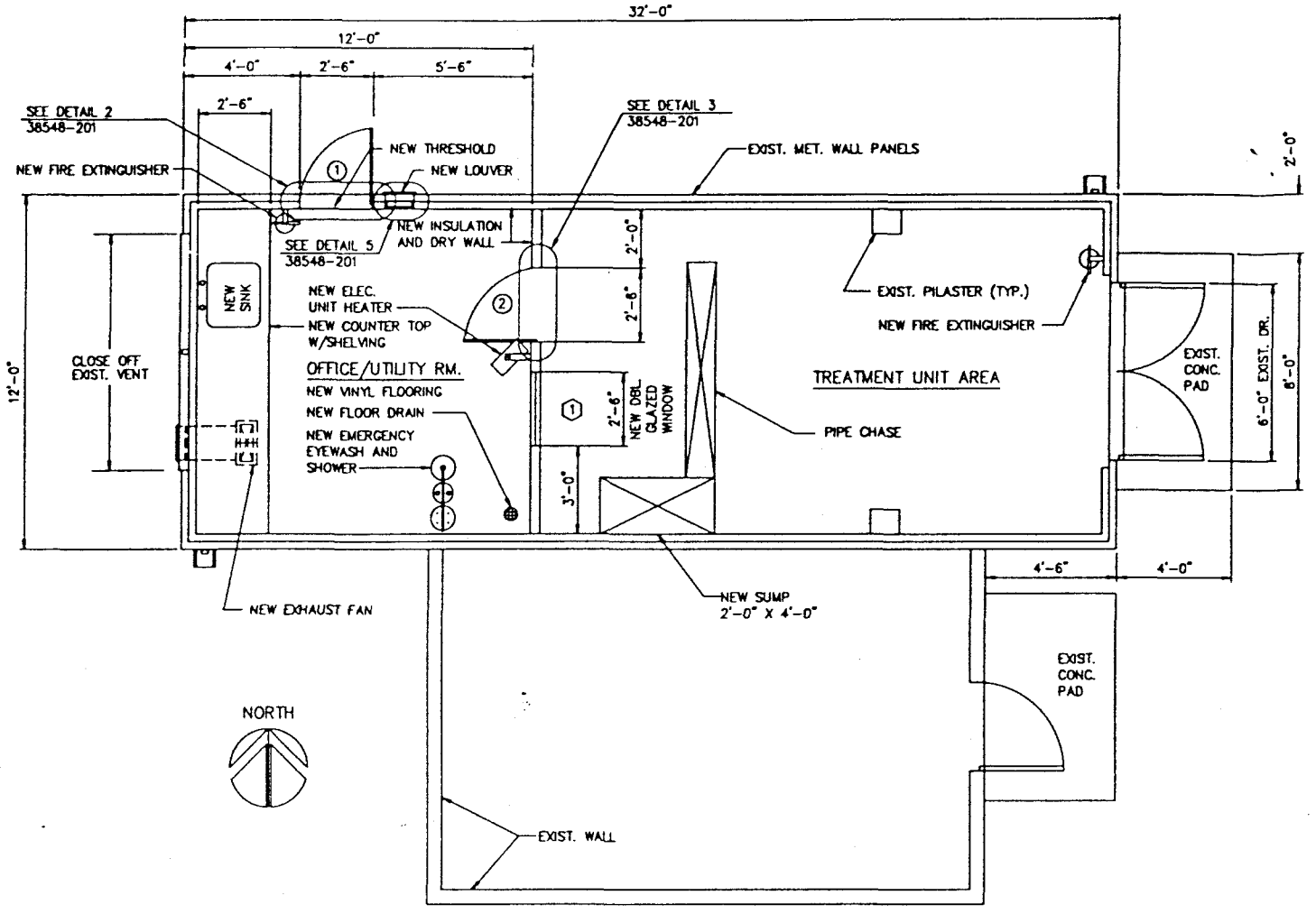

FLOOR PLAN

SCALE: 3/8"=1'-0"

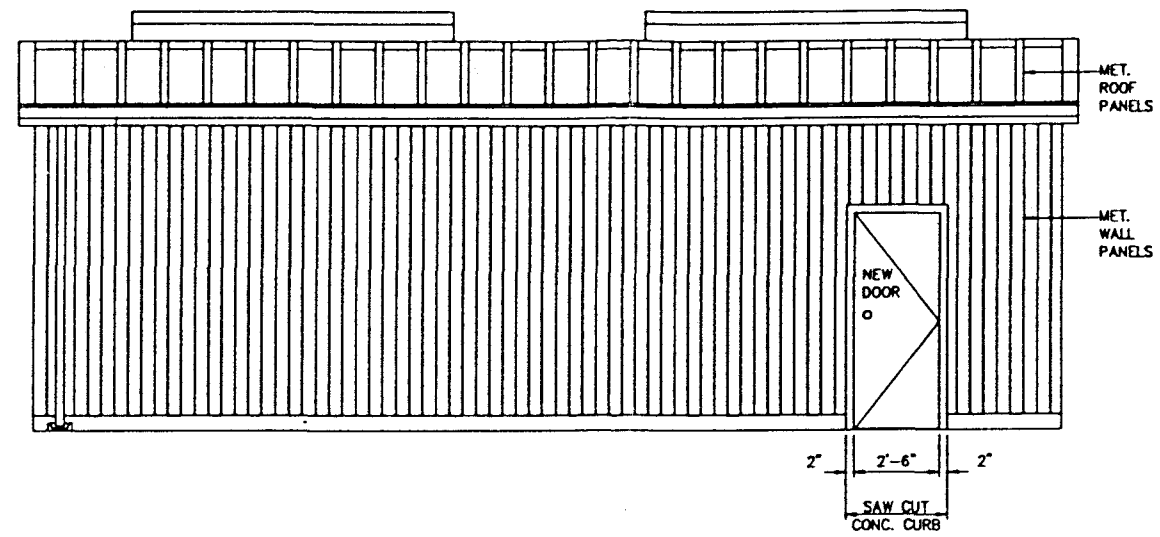

NORTH ELEVATION

SCALE: 3/8"=1'-0"

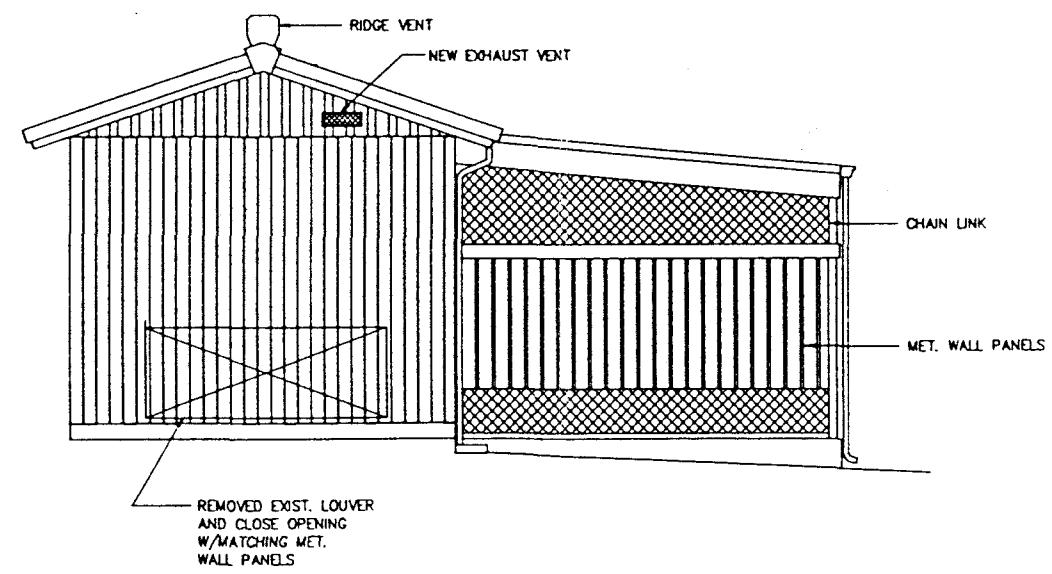

WEST ELEVATION

SCALE: 3/8"=1'-0"

NOTE:

1.) CONTRACTOR TO REMOVE AND REPLACE EXIST. CONCRETE SLAB FLOOR IN BLDG. 830 TREATMENT UNIT AREA & OFFICE UTILITY ROOM SEE-DWG. 38548-301.

FOR TITLE II REVIEW NOT FOR CONSTRUCTION

ISSUE	DESCRIPTION	DATE	RFP	DOE CLASS	JOB NO.
A	ORIGINAL ISSUE			TRU	986147

KEYWORDS

TOLERANCES: FRACT. ± ; ANGLE ± ; DEC. ± ; UNLESS NOTED OTHERWISE: REMOVE BURRS AND SHARP EDGES; RIVET ASSEMBLY

	BY	DATE
DESIGNED		
DRAWN		
CHECKED		
APPROVED		
SUBMITTED		
APPROVED RFP		
APPROVED DOE		

MASTER

SCALE: NOTED

U.S. DEPARTMENT OF ENERGY
ROCKY FLATS AREA OFFICE GOLDEN, COLORADO

Rockwell International
ROCKY FLATS PLANT
ENERGY SYSTEMS GROUP
GOLDEN, COLORADO 80402

881 Hillside Remedial Action
Building 830 Floor Plan
And Elevations

SIZE	DRAWING NUMBER	ISSUE	SHEET
D	38548-200		18 OF 35

ENGINEERING-SCIENCE
Denver, Colorado

ES

COMPUTER GENERATED DRAWING NO MANUAL CHANGES ALLOWED

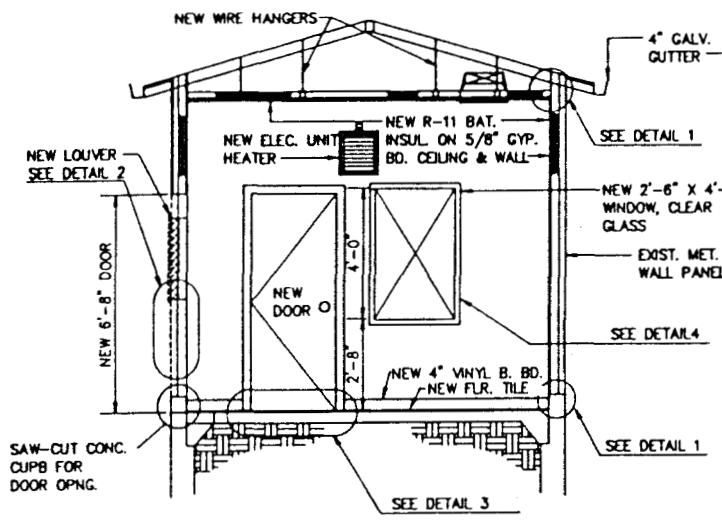

INTERIOR – EAST WALL

SCALE: 3/8"=1'-0"

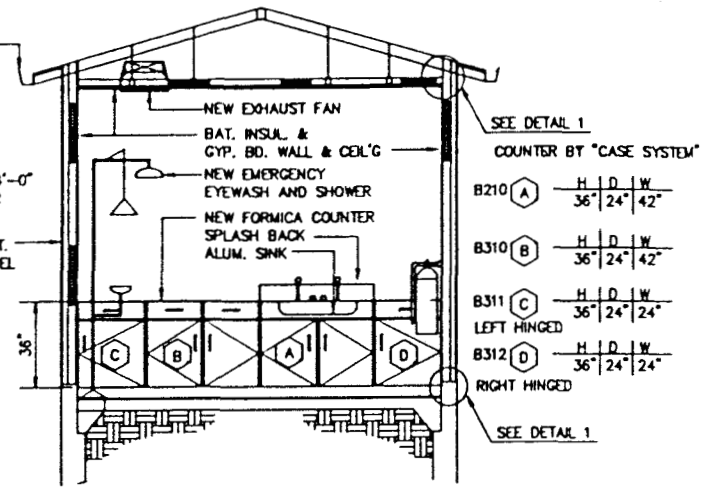

INTERIOR – WEST WALL

SCALE: 3/8"=1'-0"

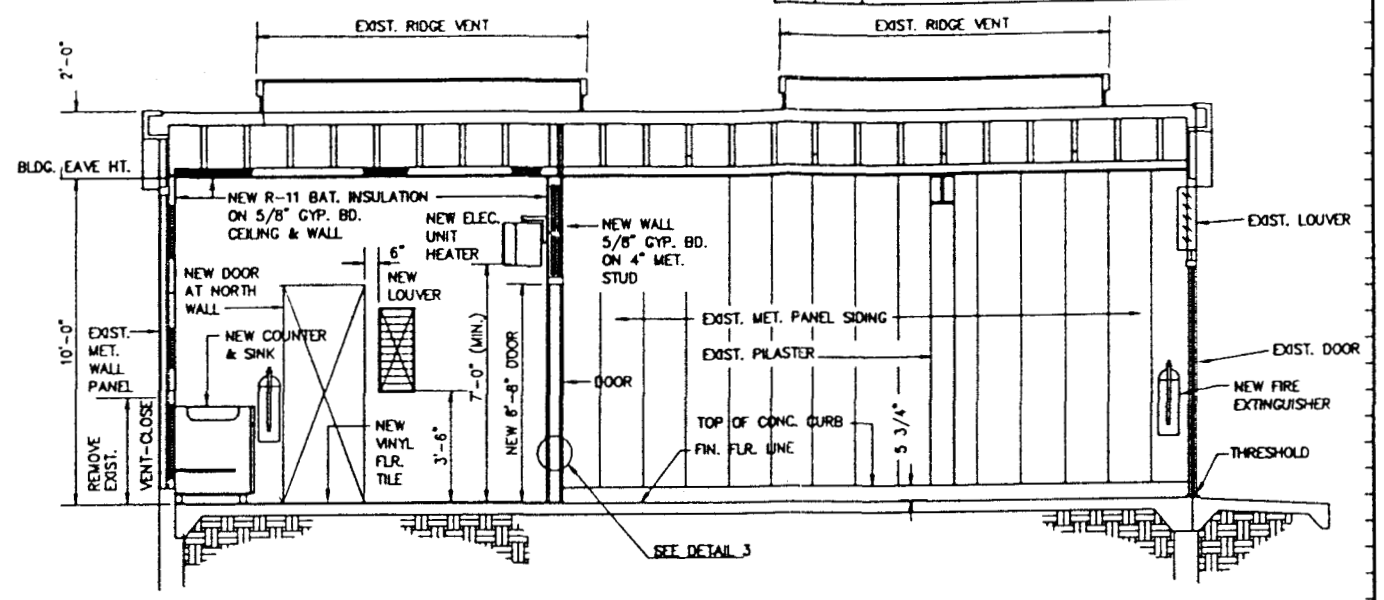

BLDG. SECTION – NORTH WALL (SOUTH SIM.)

SCALE: 3/8"=1'-0"

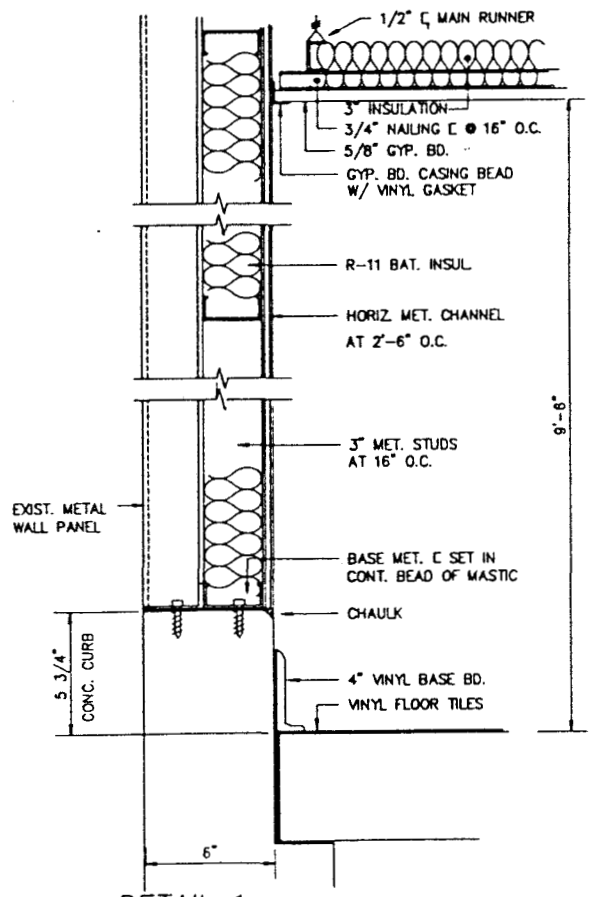

DETAIL 1
WALL & CEILING

38548-200, 38548-201 SCALE: 3" = 1'-0"

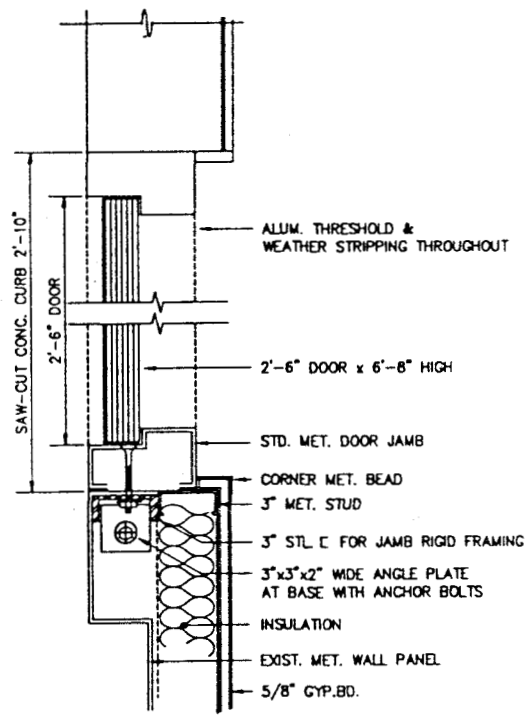

DETAIL 2
DOOR #1 JAMB

38548-200, 38548-201 SCALE: 3" = 1'-0"

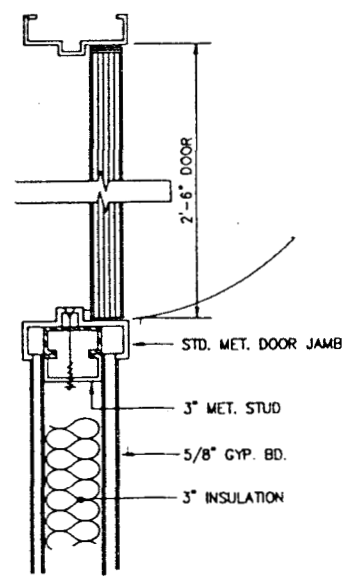

DETAIL 3
DOOR #2 JAMB

38548-200, 38548-201 SCALE: 3" = 1'-0"

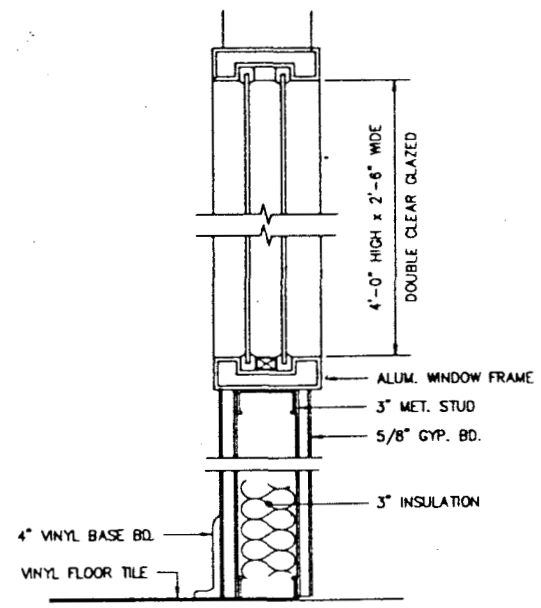

DETAIL 4
INTERIOR WINDOW

38548-200, 38548-201 SCALE: 3" = 1'-0"

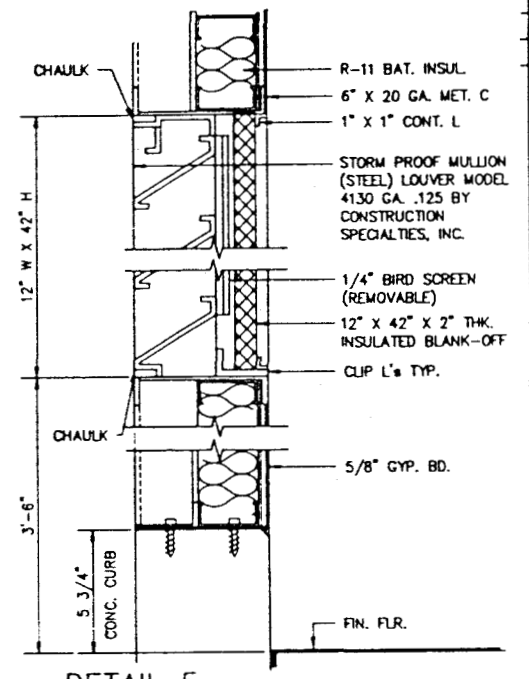

DETAIL 5
LOUVER

38548-200, 38548-201 SCALE: 3" = 1'-0"

FOR TITLE II REVIEW NOT FOR CONSTRUCTION

ISSUE	DESCRIPTION	DATE	RFP	DOE CLASS	JOB NO.
A	ORIGINAL ISSUE			TB	986147

KEYWORDS			BY	DATE
	TOLERANCES FRACT. ± ANGLE ± DEC. ± UNLESS NOTED OTHERWISE	DESIGNED		
		DRAWN		
		CHECKED		
		APPROVED		
	REMOVE BURRS AND SHARP EDGES			
	NEXT ASSEMBLY			
MASTER	SCALE: NOTED	SUBMITTED		
		APPROVED RFP		
		APPROVED DOE		

U.S. DEPARTMENT OF ENERGY
ROCKY FLATS AREA OFFICE GOLDEN, COLORADO

Rockwell International
ROCKY FLATS PLANT
ENERGY SYSTEMS GROUP
GOLDEN, COLORADO 80402

881 Hillside Remedial Action
Building 830 Interior Elevations

SIZE	DRAWING NUMBER	ISSUE	SHEET
D	38548-201		19 OF 35

ENGINEERING-SCIENCE
Denver, Colorado

ES

COMPUTER GENERATED DRAWING NO MANUAL CHANGES ALLOWED

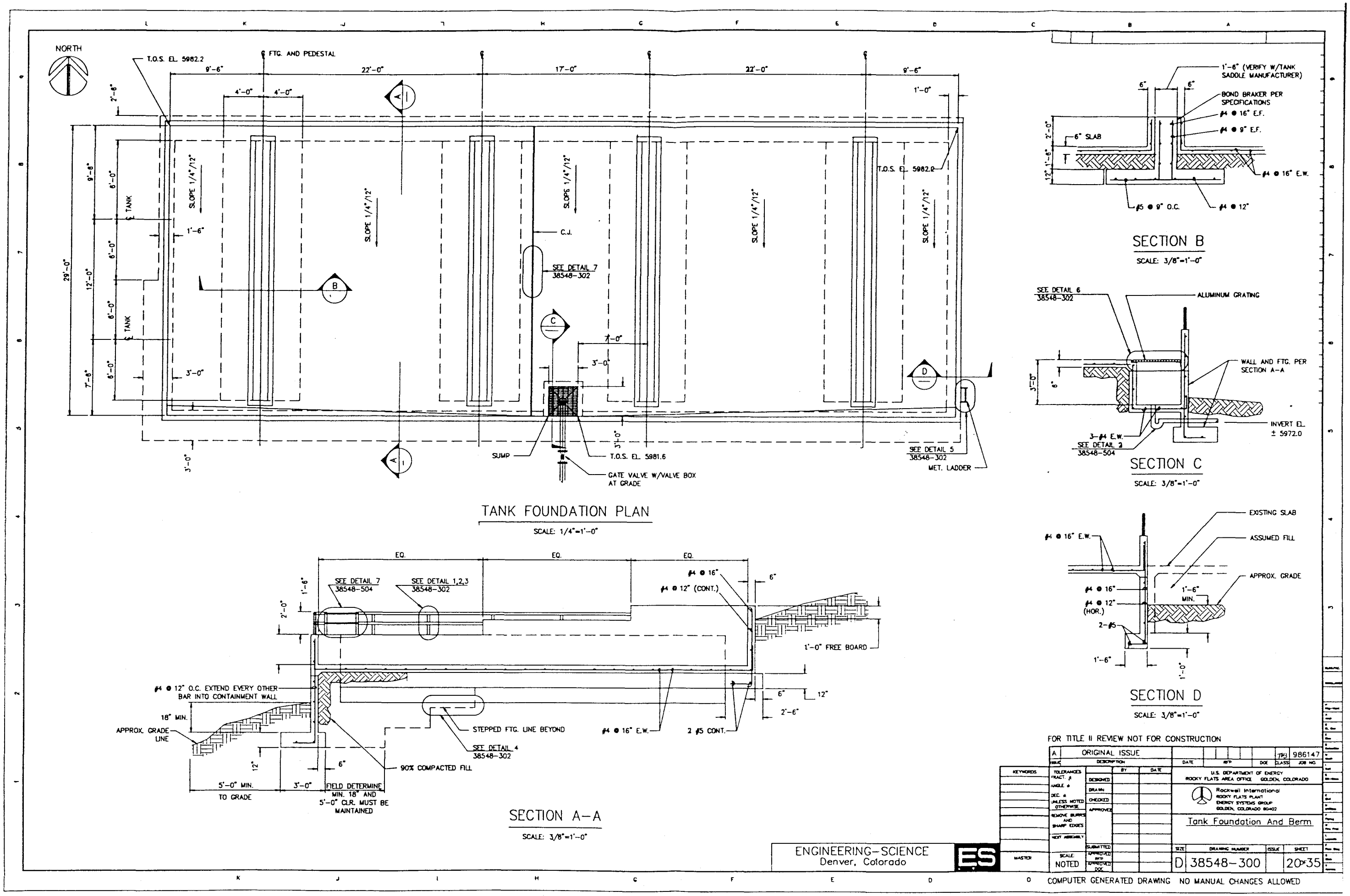

FOR TITLE II REVIEW NOT FOR CONSTRUCTION

ISSUE	DESCRIPTION	DATE	RFP	DOE	CLASS	JOB NO.
A	ORIGINAL ISSUE				TH3	986147

U.S. DEPARTMENT OF ENERGY
ROCKY FLATS AREA OFFICE GOLDEN, COLORADO

Rockwell International
ROCKY FLATS PLANT
ENERGY SYSTEMS GROUP
GOLDEN, COLORADO 80402

Tank Foundation And Berm

SIZE	DRAWING NUMBER	ISSUE	SHEET
D	38548-300		20 of 35

ENGINEERING-SCIENCE
Denver, Colorado

ES

SCALE: NOTED

COMPUTER GENERATED DRAWING NO MANUAL CHANGES ALLOWED

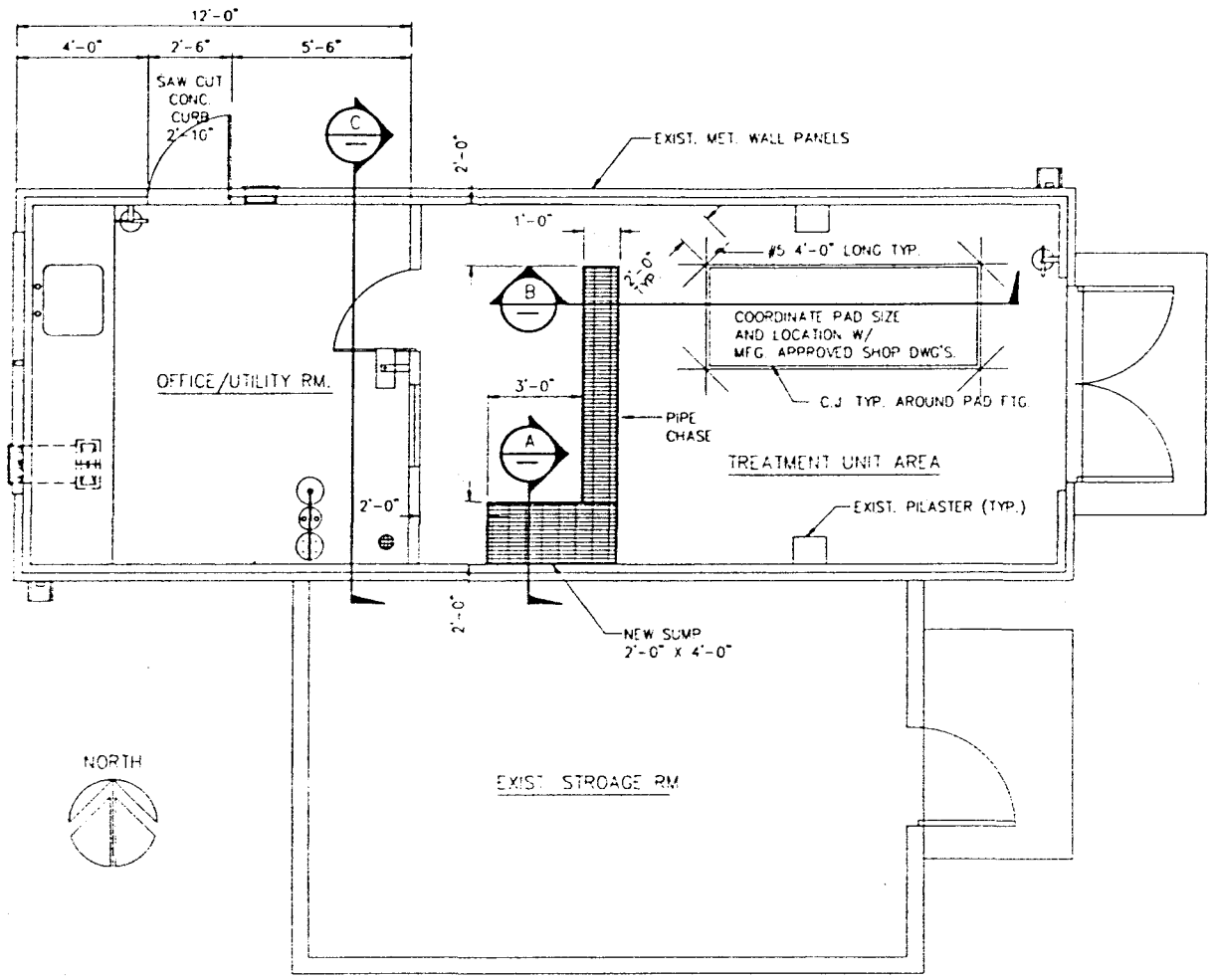

FLOOR PLAN

SCALE: 3/8"=1'-0"

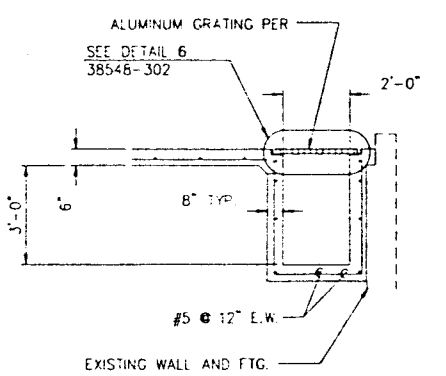

NOTE: 4" WASTE LINE FROM FLOOR DRAIN NOT SHOWN. COORDINATE LOCATION AND ELEVATION OF PIPE INTO SUMP WITH MECHANICAL DRAWINGS.

SECTION A

SCALE: 3/8"=1'-0"

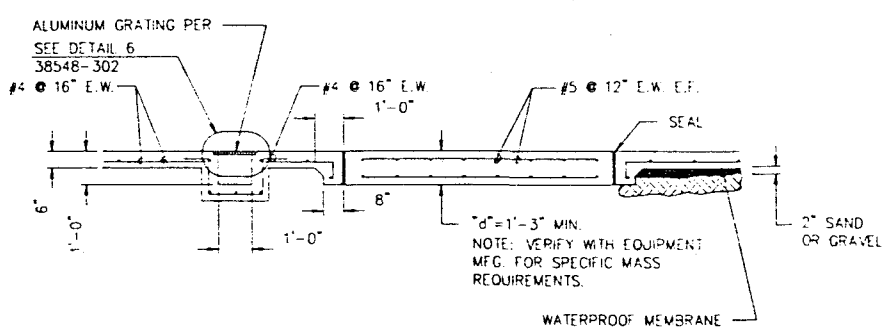

SECTION B

SCALE: 3/8"=1'-0"

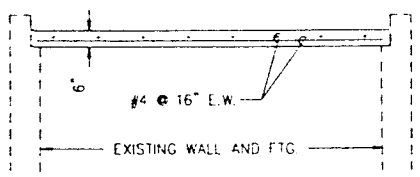

SECTION C

SCALE: 3/8"=1'-0"

GENERAL:

1. THE CONTRACTOR SHALL VERIFY ALL DIMENSIONS AND CONDITIONS AT THE SITE.
2. ALL DETAILS MARKED "TYPICAL" SHALL BE USED WHEREVER APPLICABLE, UNLESS OTHERWISE INDICATED ON PLANS.
3. ALL WORKMANSHIP AND MATERIALS SHALL CONFORM TO THE UNIFORM BUILDING CODE, CURRENT EDITION, AS A MINIMUM REQUIREMENT.
4. THE CONTRACTOR SHALL PROVIDE SAFE AND ADEQUATE BRACES, CONNECTIONS, SHORING OR OTHER DEVICES AS REQUIRED TO SUPPORT THE COMPONENT PARTS OF THE STRUCTURE UNTIL THE WORK IS SUFFICIENTLY COMPLETE SO THAT THE STRUCTURES ARE SELF-SUPPORTING AND CAPABLE OF SUPPORTING ADJACENT FOUNDATION MATERIAL.
5. CONTRACTOR SHALL PROVIDE ALL CONSTRUCTION JOINTS AS REQUIRED TO PERFORM THE WORK. THE PREFERRED LOCATIONS ARE SHOWN ON THE DRAWINGS. ADDITIONAL JOINTS OR REVISED LOCATIONS FROM THOSE SHOWN OR DELETION OF JOINTS SHOWN SHALL REQUIRE APPROVAL FROM THE ENGINEER.
6. CONTRACTOR SHALL VERIFY ALL EQUIPMENT PAD SIZES, ANCHOR BOLT SIZES AND LOCATIONS AND OTHER EMBEDDED ITEMS WITH EQUIPMENT MANUFACTURER'S APPROVED SHOP DRAWINGS PRIOR TO POURING CONCRETE.
7. SEE MECHANICAL, ELECTRICAL, AND CIVIL DRAWINGS FOR EQUIPMENT PADS NOT SHOWN ON STRUCTURAL DRAWINGS.

WATERSTOPS AND CONSTRUCTION JOINTS:

1. CONSTRUCTION JOINTS WHERE INDICATED ON THE PLANS SHALL EXTEND THROUGH HORIZONTAL AND VERTICAL CONCRETE SURFACES TO THE EXTENT OF THE CONSTRUCTION JOINT LINE SHOWN ON THE DRAWINGS.
2. WHERE WATERSTOPS ARE SHOWN IN THE STRUCTURAL SECTIONS IT IS THE INTENT THAT THE WATERSTOP BE CONTINUOUS AND FOLLOW THE LINE OF THE JOINT WHERE IT MAY BE OFFSET, DEPRESSED OR SLOPED UNTIL SUCH POINT IS REACHED THAT IT MAY BE SPLICED WITH ANOTHER WATERSTOP OR WATERSTOPS AT INTERSECTION CONSTRUCTION JOINTS SO AS TO COMPLETELY SEAL THE PORTIONS OF STRUCTURE UNDER CONSIDERATION.
3. WATERSTOP SPLICES SHALL BE IN ACCORDANCE WITH THE METHODS PRESCRIBED BY THE WATERSTOP MANUFACTURER.

CONCRETE:

1. ALL CONCRETE SHALL BE 150 LB. PER CU. FT. DENSITY, EXCEPT AS SPECIFICALLY NOTED OTHERWISE.
2. ALL CONCRETE SHALL ATTAIN THE FOLLOWING 28-DAY ULTIMATE COMPRESSIVE STRENGTHS:
   A. CLASS 2, 3000 PSI
3. CEMENT SHALL BE PORTLAND CEMENT, TYPE V CONFORMING TO ASTM C 150. CEMENT NEED NOT BE TESTED IF MILL TEST REPORTS ARE AVAILABLE.
4. ALL FINE AND COARSE AGGREGATES SHALL BE NON-REACTIVE (SEE SPECIFICATIONS) AND SHALL CONFORM TO ASTM C33.
5. MAXIMUM AGGREGATE SIZE SHALL BE 3/4" FOR SECTIONS 5" THICK AND THINNER, 1" FOR SECTIONS 5" TO 12" THICK, AND 1-1/2" FOR SECTIONS THICKER THAN 12".
6. ADMIXTURE MAY BE ADDED AT THE CONTRACTOR'S OPTION PROVIDED IT COMPLIES WITH THE SPECIFICATIONS. SUBMIT PROPOSED ADMIXTURE AND QUANTITIES TO BE USED FOR BUYER'S REVIEW.
7. ALL REINFORCING STEEL, DOWELS, ANCHOR BOLTS, AND OTHER INSERTS SHALL BE SECURELY TIED IN PLACE PRIOR TO PLACING CONCRETE.
8. ALL WATER SHALL BE REMOVED FROM FOUNDATION EXCAVATIONS AND THE EXCAVATIONS SHALL BE COMPLETELY DRY BEFORE PLACING CONCRETE.
9. PROVIDE 3/4" CHAMFER ON ALL EXPOSED EDGES, UNLESS OTHERWISE NOTED.
10. ALL CONCRETE EXPOSED TO OUTSIDE WEATHER SHALL BE AIR ENTRAINED. CONC. MIN. AIR ENTRAINMENT SHALL BE 5% +/-

REINFORCING STEEL:

1. ALL REINFORCING STEEL SHALL BE NEW BILLET STEEL DEFORMED BARS AND SHALL CONFORM TO ASTM A 615, GRADE 60. WELDED WIRE FABRIC SHALL CONFORM TO ASTM A 185.
2. ALL BARS SHALL BE FREE FROM BENDS, KINKS, AND OTHER IRREGULARITIES (EXCEPT AS DETAILED ON THE PLANS) AND SHALL BE FREE FROM ANY MATERIAL WHICH WOULD TEND TO REDUCE THE BOND.
3. ALL REINFORCING, EXCEPT FOR SLABS ON GRADE AND FOOTINGS, SHALL BE SUPPORTED OR SPACED WITH METAL CHAIRS. ALUMINUM CHAIRS WILL NOT BE ALLOWED. REINFORCING FOR SLABS ON GRADE, FOOTINGS, AND ON MEMBRANE SHALL BE SUPPORTED ON CONCRETE CUBES.
4. ALL SPLICES IN REINFORCEMENT SHALL BE AS DETAILED ON PLANS. ALTERNATE METHODS OF SPLICING WILL BE REVIEWEDE BY THE BUYER ON REQUEST
5. ALL REINFORCEMENT, INCLUDING MESH, SHALL BE SECURELY TIED IN PLACE PRIOR TO PLACING CONCRETE.
6. THE MINIMUM CLEAR COVER OVER REINFORCING SHALL BE AS FOLLOWS:
   A. CONCRETE CAST AGAINST EARTH ---------- 3"
   B. FORMED CONCRETE AGAINST EARTH OR WATER ---------- 2"
   C. CONCRETE SLABS & WALLS NOT EXPOSED TO WATER -------- 3/4"
7. WELDING OF REINFORCEMENT MUST BE APPROVED BY THE BUYER PRIOR TO WELDING AND SHALL BE DONE WITH LOW-HYDROGEN ELECTRODES.

FOR TITLE II REVIEW NOT FOR CONSTRUCTION

ISSUE	DESCRIPTION	BY	DATE
A	ORIGINAL ISSUE		

DATE | RCP | DOE CLASS | TR 986147 JOB NO

KEYWORDS

TOLERANCES FRACT. ± ANGLE ± DEC. ± UNLESS NOTED OTHERWISE
REMOVE BURRS AND SHARP EDGES
NEXT ASSEMBLY
MASTER
SCALE NOTED

DESIGNED | DRAWN | CHECKED | APPROVED | SUBMITTED | APPROVED AFC | APPROVED DOE

U.S. DEPARTMENT OF ENERGY
ROCKY FLATS AREA OFFICE GOLDEN, COLORADO

Rockwell International
ROCKY FLATS PLANT
ENERGY SYSTEMS GROUP
GOLDEN, COLORADO 80402

881 Hillside Remedial Action
Building 830 Plan, Sections And Structural Notes

SIZE D | DRAWING NUMBER 38548-301 | ISSUE | SHEET 21 of 35

ENGINEERING-SCIENCE
Denver, Colorado

ES

COMPUTER GENERATED DRAWING NO MANUAL CHANGES ALLOWED

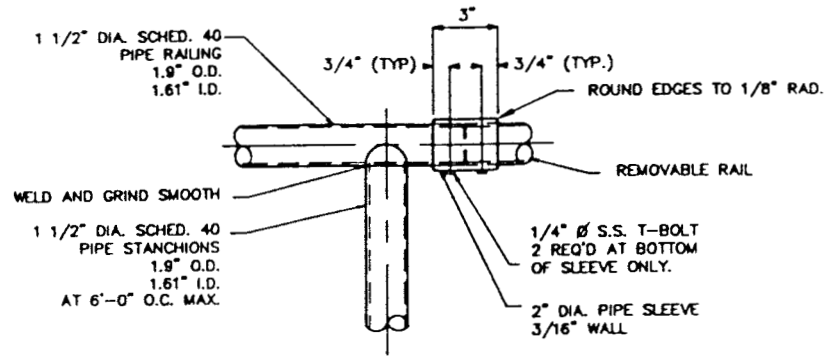

DETAIL 1
REMOVABLE HAND RAIL
38548-300 SCALE: 1/4" = 1'-0"

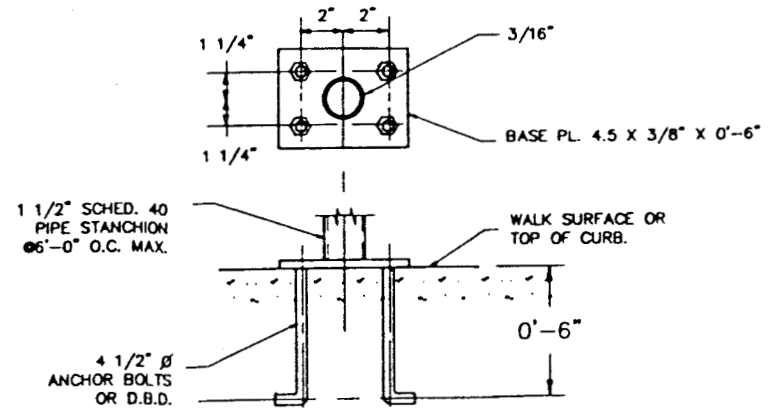

DETAIL 2
HANDRAIL POST ATTACHMENT WITHOUT TOE PLATE
38548-300 SCALE: 1/4" = 1'-0"

NOTES:
1.) WHERE DWGS. CALL FOR ALUM. HAND RAIL ALL BARS, PLATE, AND PIPE SHALL BE OF ALUM. (6061-T6) AND ALL FASTENERS SHALL BE OF STAINLESS STEEL. COAT ALUM. SURFACES IN CONTACT WITH CONCRETE PER SPECS.
2.) WHERE DWGS. CALL FOR STEEL HANDRAIL BARS, PLATE, AND PIPE SHALL BE OF STEEL (A-36) WITH PIPE (A-53 GR. B) AND FASTENERS MAY BE OF STEEL (A-307).
3.) SEE SPECIFICATIONS FOR FINISHES.
4.) D.B.D = DEFERRED BOLTING DEVICE. SEE SPECS.

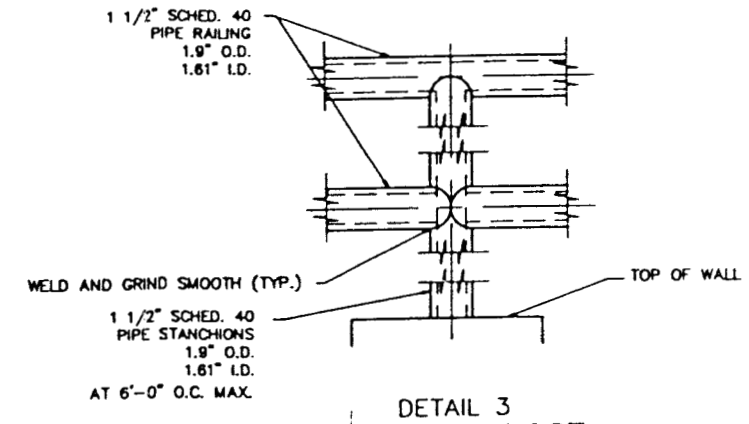

DETAIL 3
HANDRAIL POST
38548-300 SCALE: 1/4" = 1'-0"

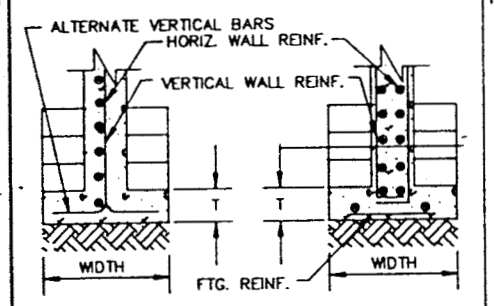

SINGLE MAT WALL REINF. SECTION — DOUBLE MAT WALL REINF. SECTION

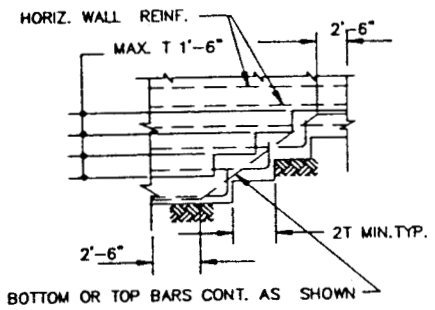

DETAIL 4
PLAN
TYP. FOOTING STEP
38548-300 NOT TO SCALE

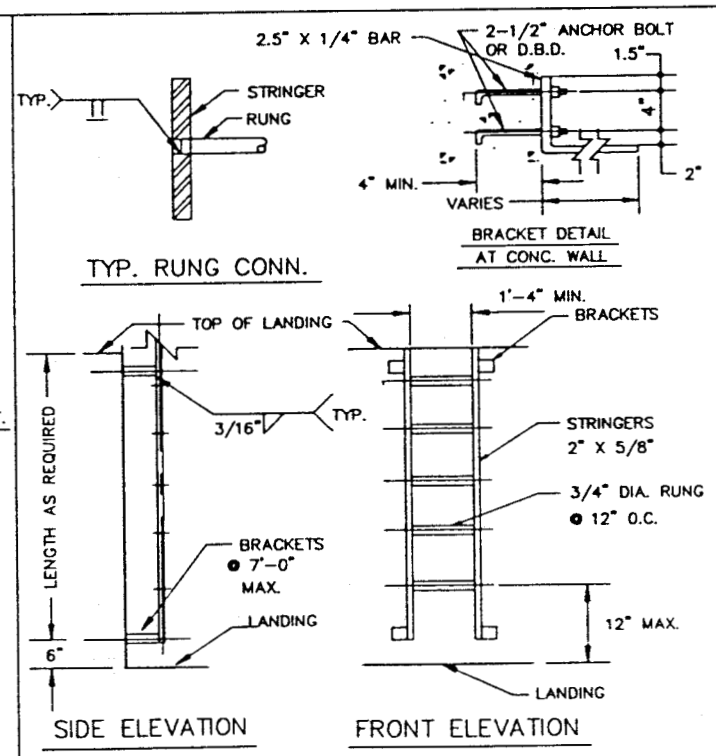

DETAIL 5
LADDER
38548-300 NOT TO SCALE

NOTES:
1.) ALUM.,6061-T6 ALLOY.
2.) D.B.D = DEFERRED BOLTING DEVICE-SEE SPECS.
3.) USE S.S. FASTENERS.

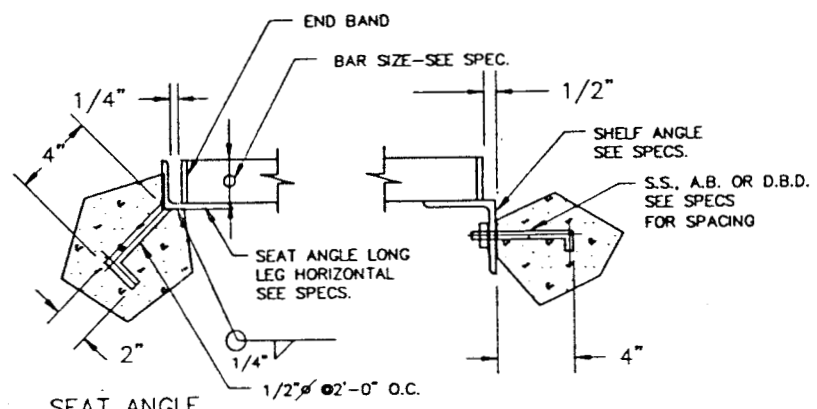

ALL ALUM. TO BE ALLOY 6061-T6

DETAIL 6
ALUM. GRATING
38548-300,301,401 NOT TO SCALE

NOTE:
1.) SEAT ANGLES AND ANCHORS SHALL BE ALUM.
2.) SHELF ANGLE SHALL BE ALUM. WITH S.S. FASTENERS.
3.) SEE SPECS FOR COATING ALUM. SURFACES IN CONTACT WITH CONCRETE.
4.) S.S. = STAINLESS STEEL - SEE SPECS.
5.) A.B. ANCHOR BOLT.
6.) D.B.D. = DEFERRED BOLTING DEVICE - SEE SPECS.
7.) SEE SPECS. FOR SIZE-SPAN LIMITS AND OTHER REQUIREMENTS.

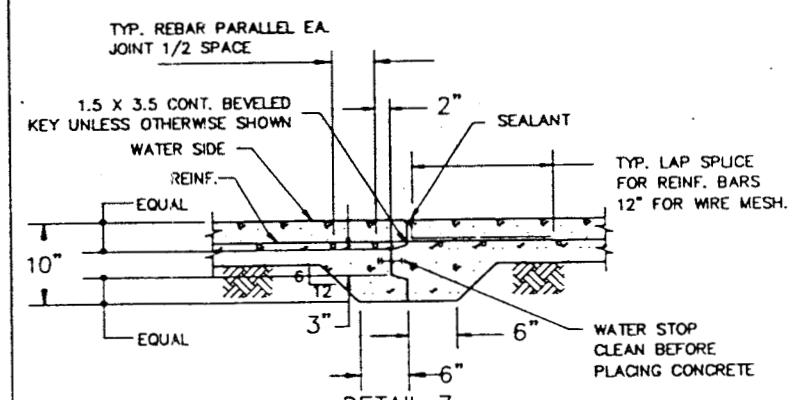

DETAIL 7
WATER BEARING SLAB
38548-300 NOT TO SCALE

NOTE:
1.) CONSTRUCTION JOINTS SHALL BE LOCATED AS SHOWN ON CONTRACT DRAWINGS.
2.) SEE SPECIFICATIONS AND STRUCTURAL NOTES.
3.) CLEAN JOINT AND REINFORCING PRIOR TO PLACING ADJOINING CONCRETE.

FOR TITLE II REVIEW NOT FOR CONSTRUCTION

ISSUE	DESCRIPTION	DATE	BY	DATE
A	ORIGINAL ISSUE			

DATE | RFP | DOE CLASS | JOB NO. 986147

KEYWORDS

TOLERANCES: FRACT. ± ; ANGLE ± ; DEC. ± ; UNLESS NOTED OTHERWISE ; REMOVE BURRS AND SHARP EDGES ; NEXT ASSEMBLY

DESIGNED | DRAWN: MS | CHECKED | APPROVED | SUBMITTED | APPROVED RFP | APPROVED DOE

MASTER

SCALE: NOTED

U.S. DEPARTMENT OF ENERGY
ROCKY FLATS AREA OFFICE GOLDEN, COLORADO

Rockwell International
ROCKY FLATS PLANT
ENERGY SYSTEMS GROUP
GOLDEN, COLORADO 80402

881 Hillside Remedial Action
Structural Details

SIZE	DRAWING NUMBER	ISSUE	SHEET
D	38548-302		22 OF 35

ENGINEERING-SCIENCE
Denver, Colorado

ES

COMPUTER GENERATED DRAWING NO MANUAL CHANGES ALLOWED

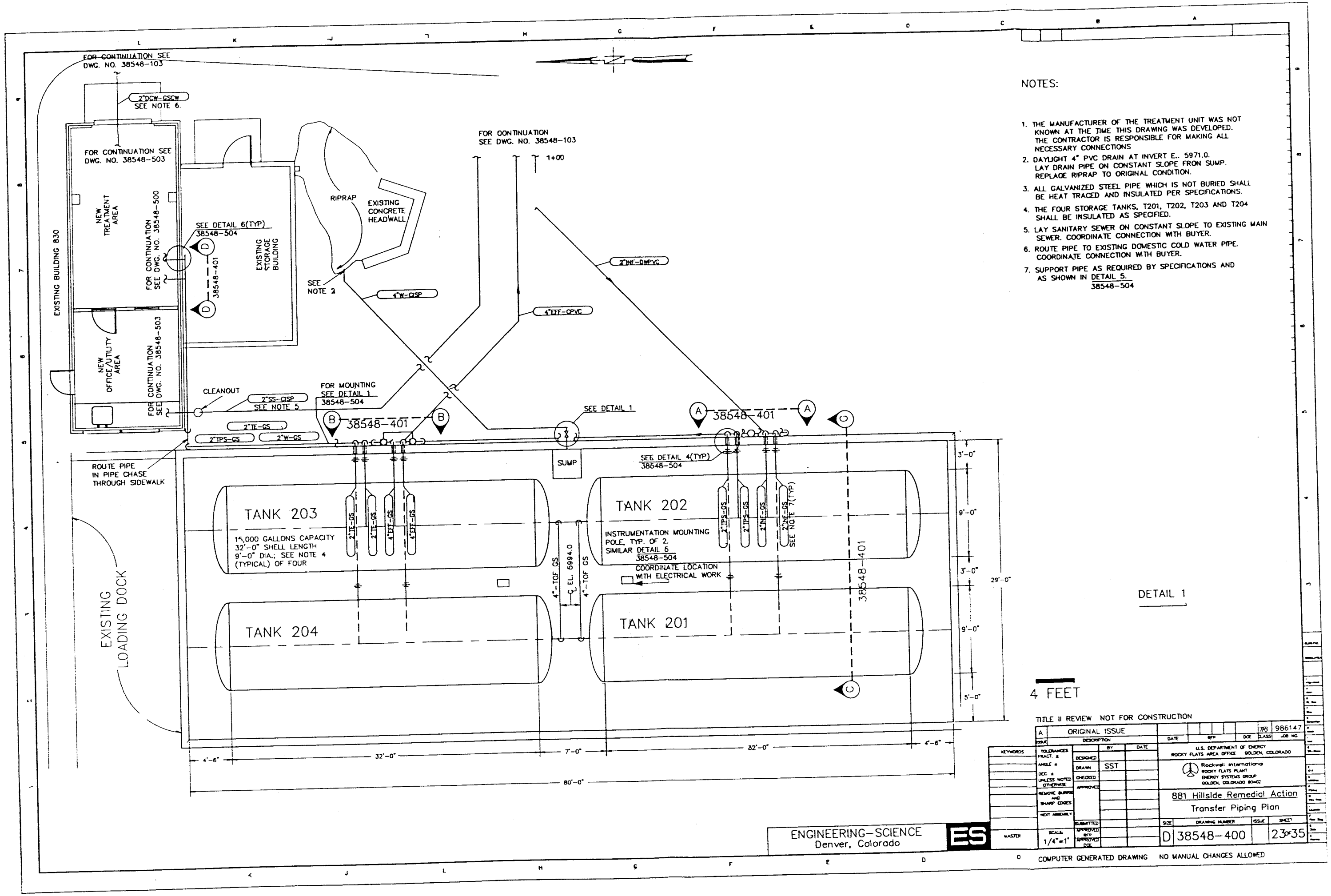

NOTES:

1. THE MANUFACTURER OF THE TREATMENT UNIT WAS NOT KNOWN AT THE TIME THIS DRAWING WAS DEVELOPED. THE CONTRACTOR IS RESPONSIBLE FOR MAKING ALL NECESSARY CONNECTIONS
2. DAYLIGHT 4" PVC DRAIN AT INVERT E.. 5971.0. LAY DRAIN PIPE ON CONSTANT SLOPE FRON SUMP. REPLACE RIPRAP TO ORIGINAL CONDITION.
3. ALL GALVANIZED STEEL PIPE WHICH IS NOT BURIED SHALL BE HEAT TRACED AND INSULATED PER SPECIFICATIONS.
4. THE FOUR STORAGE TANKS, T201, T202, T203 AND T204 SHALL BE INSULATED AS SPECIFIED.
5. LAY SANITARY SEWER ON CONSTANT SLOPE TO EXISTING MAIN SEWER. COORDINATE CONNECTION WITH BUYER.
6. ROUTE PIPE TO EXISTING DOMESTIC COLD WATER PIPE. COORDINATE CONNECTION WITH BUYER.
7. SUPPORT PIPE AS REQUIRED BY SPECIFICATIONS AND AS SHOWN IN DETAIL 5. 38548-504

TITLE II REVIEW NOT FOR CONSTRUCTION

ISSUE	DESCRIPTION	DATE	RFP	DOE CLASS	JOB NO.
A	ORIGINAL ISSUE			7/93	986147

	BY	DATE
DESIGNED		
DRAWN	SST	
CHECKED		
APPROVED		
SUBMITTED		
APPROVED BY		
APPROVED DOE		

KEYWORDS

TOLERANCES FRACT. ± ANGLE ± DEC. ± UNLESS NOTED OTHERWISE

REMOVE BURRS AND SHARP EDGES

NEXT ASSEMBLY

SCALE: 1/4"=1'

MASTER

U.S. DEPARTMENT OF ENERGY
ROCKY FLATS AREA OFFICE GOLDEN, COLORADO

Rockwell International
ROCKY FLATS PLANT
ENERGY SYSTEMS GROUP
GOLDEN, COLORADO 80402

881 Hillside Remedial Action

Transfer Piping Plan

SIZE	DRAWING NUMBER	ISSUE	SHEET
D	38548-400		23 of 35

ENGINEERING-SCIENCE
Denver, Colorado

ES

COMPUTER GENERATED DRAWING NO MANUAL CHANGES ALLOWED

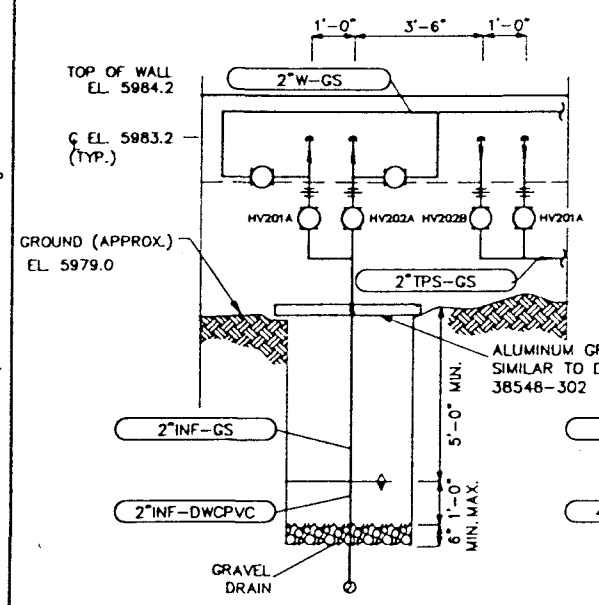

SECTION A–A

38548-400 NOT TO SCALE

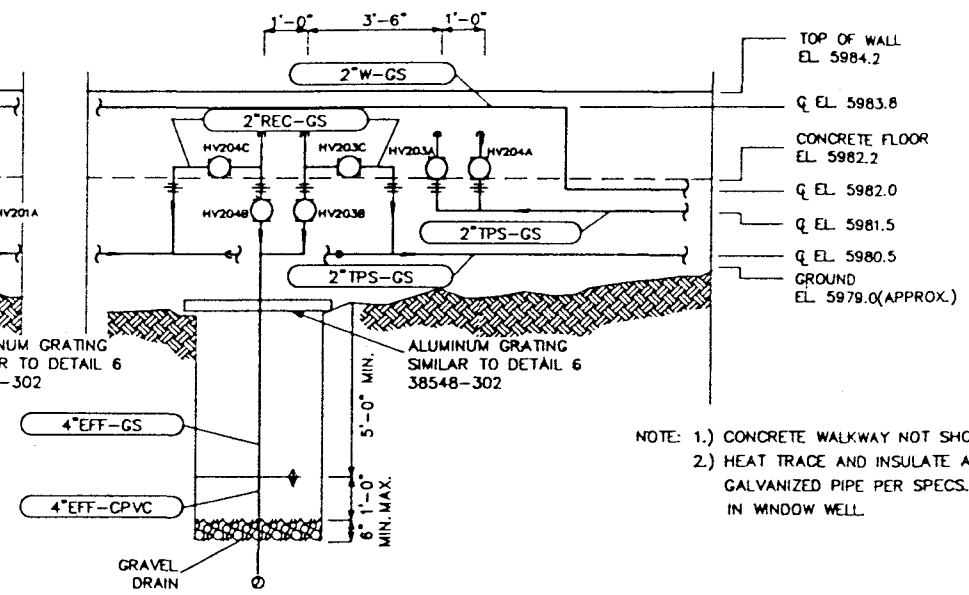

NOTE: 1.) CONCRETE WALKWAY NOT SHOWN.
2.) HEAT TRACE AND INSULATE ALL EXPOSED GALVANIZED PIPE PER SPECS.,INCLUDING PIPE IN WINDOW WELL.

SECTION B–B

38548-400 NOT TO SCALE

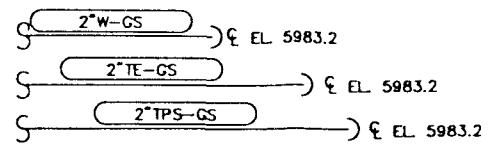

NOTE: SECTION SHOWN FOR ELEVATION OF PIPES ONLY.

SECTION D–D

38548-400 NOT TO SCALE

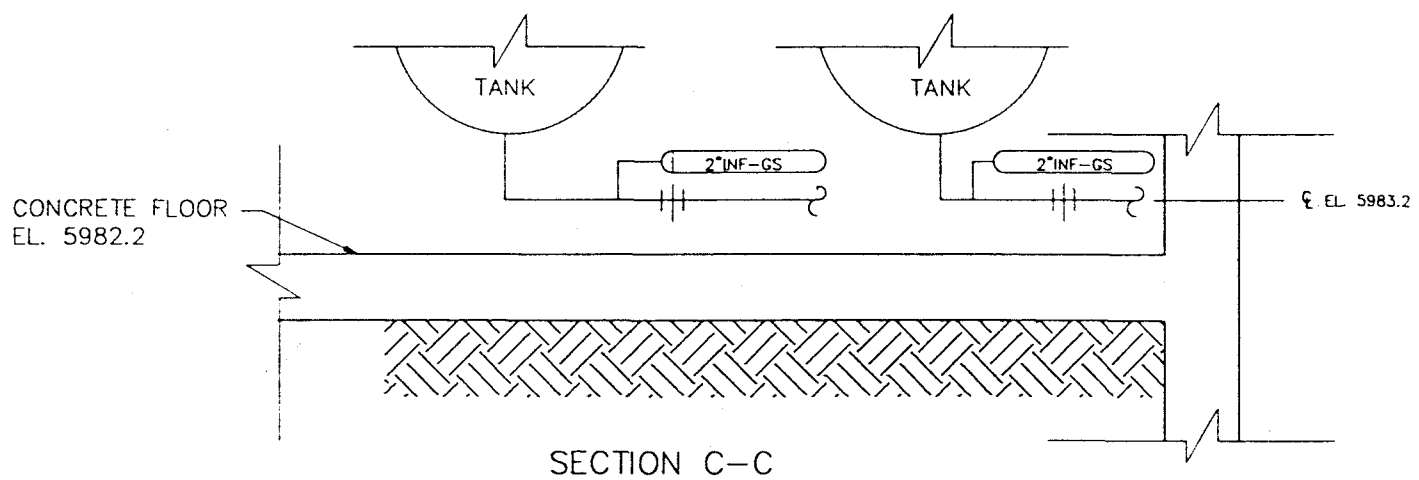

SECTION C–C

38548-400 NOT TO SCALE

NOTES:
1.) SUPPORT PIPE AS REQUIRED BY SPECIFICATION AND AS SHOWN IN DETAIL 5, 38548-504.
2.) 2" INF-GS SHOWN, OTHER PIPES SIMILAR.

FOR TITLE II REVIEW NOT FOR CONSTRUCTION

ISSUE	DESCRIPTION	DATE	RFP	DOE CLASS	JOB NO
A	ORIGINAL ISSUE			R	986147

KEYWORDS

TOLERANCES: FRACT. ± ; ANGLE ± ; DEC. ± UNLESS NOTED OTHERWISE ; REMOVE BURRS AND SHARP EDGES ; NEXT ASSEMBLY

	BY	DATE
DESIGNED		
DRAWN	SST	
CHECKED		
APPROVED		
SUBMITTED		
APPROVED RFP		
APPROVED DOE		

MASTER

SCALE: AS NOTED

U.S. DEPARTMENT OF ENERGY
ROCKY FLATS AREA OFFICE GOLDEN, COLORADO

Rockwell International
ROCKY FLATS PLANT
ENERGY SYSTEMS GROUP
GOLDEN, COLORADO 80402

881 Hillside Remedial Action
Transfer Piping Sections

SIZE	DRAWING NUMBER	ISSUE	SHEET
D	38548-401		24 OF 35

ENGINEERING-SCIENCE
Denver, Colorado
ES

COMPUTER GENERATED DRAWING NO MANUAL CHANGES ALLOWED

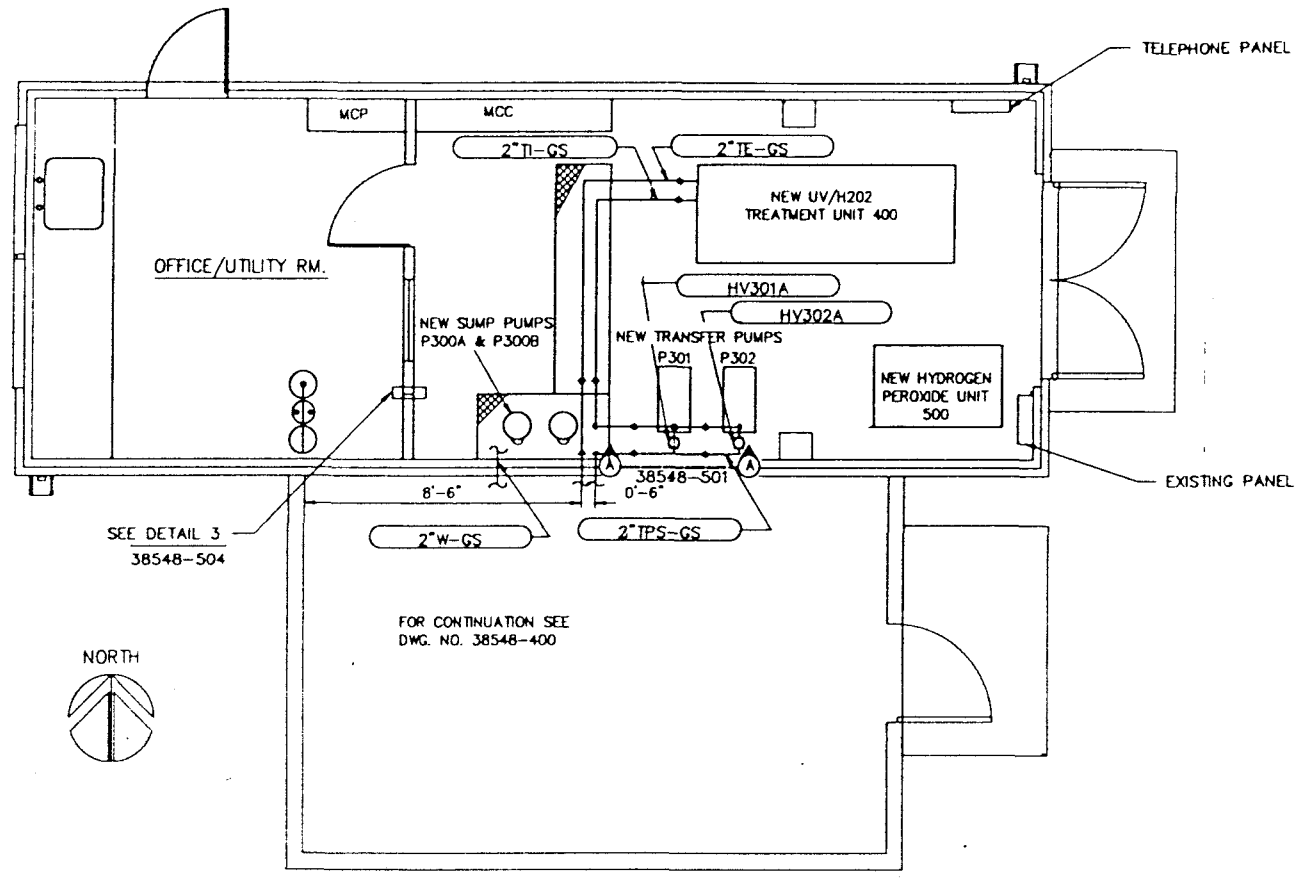

FLOOR PLAN

SCALE: 3/8" = 1'-0"

NOTES:

1.) THE MANUFACTURER OF TREATMENT EQUIPMENT WAS NOT KNOWN AT THE TIME DRAWINGS WERE DEVELOPED. EXACT LOCATION OF PIPING AND EQUIPMENT MUST BE COORDINATED WITH BYER USING APPROVED EQUIPMENT SHOP DRAWINGS.

2.) ALL GALVANIZED STEEL PIPE WHICH IS NOT BURIED SHALL BE HEAT TRACED AND INSULATED.

3.) SUPPORT PIPE AS REQUIRED BY SPECIFICATIONS AND AS SHOWN IN DETAIL 5 / 38548-504

FOR TITLE II REVIEW NOT FOR CONSTRUCTION

A	ORIGINAL ISSUE			986147
ISSUE	DESCRIPTION	DATE	RFP	DOE CLASS	JOB NO.

U.S. DEPARTMENT OF ENERGY
ROCKY FLATS AREA OFFICE GOLDEN, COLORADO

Rockwell International
ROCKY FLATS PLANT
ENERGY SYSTEMS GROUP
GOLDEN, COLORADO 80402

881 Hillside Remedial Action
Building 830
Equipment Location Plan

SIZE	DRAWING NUMBER	ISSUE	SHEET
D	38548-500		25 OF 35

KEYWORDS

TOLERANCES: FRACT ± ANGLE ± DEC ± UNLESS NOTED OTHERWISE; REMOVE BURRS AND SHARP EDGES; NEXT ASSEMBLY

DESIGNED / DRAWN / CHECKED / APPROVED / SUBMITTED / APPROVED RFP / APPROVED DOE

BY / DATE

MASTER

SCALE: NOTED

ENGINEERING-SCIENCE
Denver, Colorado

ES

COMPUTER GENERATED DRAWING NO MANUAL CHANGES ALLOWED

NOTES:

THE MANUFACTURER OF TREATMENT EQUIPMENT WAS NOT KNOWN AT THE TIME DRAWINGS WERE DEVELOPED. EXACT LOCATION OF PIPING AND EQUIPMENT MUST BE COORDINATED WITH BUYER USING APPROVED EQUIPMENT SHOP DRAWINGS.

NOTE: SUPPORT TRANSFER PUMP DISCHARGE PIPING FROM FLOOR

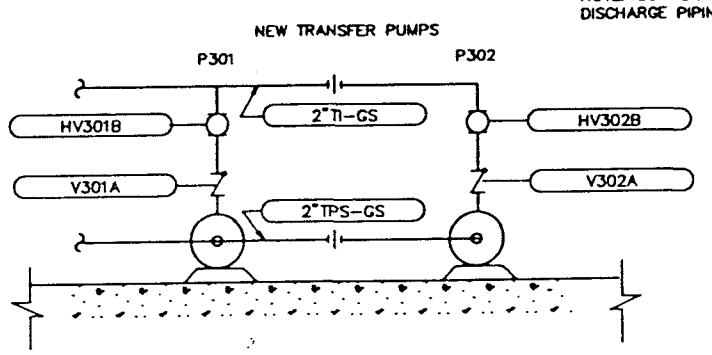

SECTION A–A

38548–500 NOT TO SCALE

FOR TITLE II REVIEW NOT FOR CONSTRUCTION

ISSUE	DESCRIPTION	DATE	RFP	DOE	CLASS	JOB NO.
A	ORIGINAL ISSUE				TRB	986147

KEYWORDS

TOLERANCES FRACT. ± ANGLE ± DEC. ± UNLESS NOTED OTHERWISE

REMOVE BURRS AND SHARP EDGES

NEXT ASSEMBLY

MASTER

SCALE:

	BY	DATE
DESIGNED		
DRAWN		
CHECKED		
APPROVED		
SUBMITTED		
APPROVED RFP		
APPROVED DOE		

U.S. DEPARTMENT OF ENERGY
ROCKY FLATS AREA OFFICE GOLDEN, COLORADO

Rockwell International
ROCKY FLATS PLANT
ENERGY SYSTEMS GROUP
GOLDEN, COLORADO 80402

881 Hillside Remedial Action
Building 830
Equipment Location Sections

SIZE	DRAWING NUMBER	ISSUE	SHEET
D	38548–501		26 OF 35

ENGINEERING–SCIENCE
Denver, Colorado

ES

COMPUTER GENERATED DRAWING NO MANUAL CHANGES ALLOWED

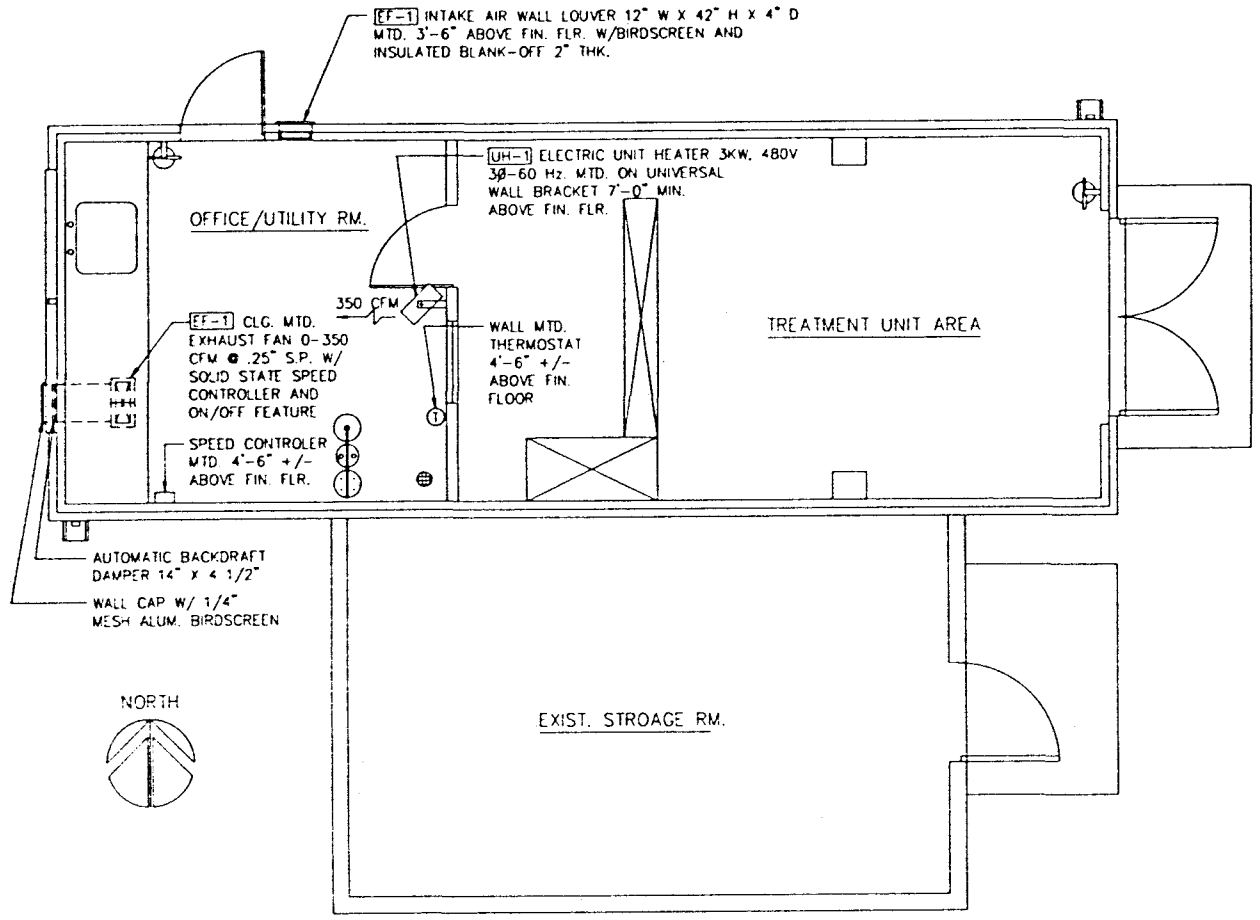

HVAC PLAN

SCALE: 3/8"=1'-0"

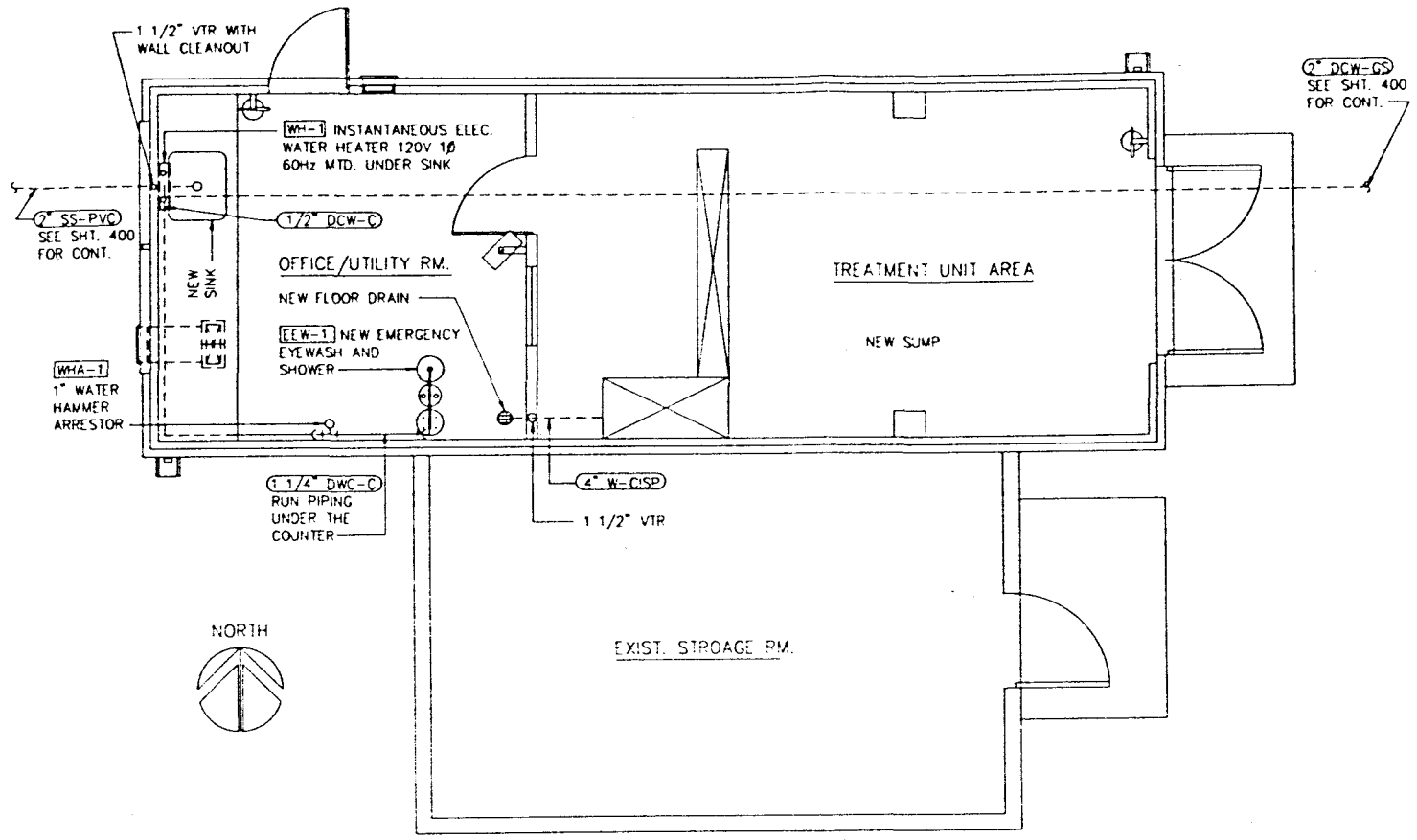

PLUMBING PLAN

SCALE: 3/8"=1'-0"

FOR TITLE II REVIEW NOT FOR CONSTRUCTION

ISSUE	DESCRIPTION	DATE	REP	DOC	CLASS	JOB NO.
A	ORIGINAL ISSUE				TPS	986147

KEYWORDS

TOLERANCES FRACT. ± ANGLE ± DEC. ± UNLESS NOTED OTHERWISE

REMOVE BURRS AND SHARP EDGES

NEXT ASSEMBLY

MASTER

SCALE NOTED

	BY	DATE
DESIGNED		
DRAWN		
CHECKED		
APPROVED		
SUBMITTED		
APPROVED PER		
APPROVED DOC		

U.S. DEPARTMENT OF ENERGY
ROCKY FLATS AREA OFFICE GOLDEN, COLORADO

Rockwell International
ROCKY FLATS PLANT
ENERGY SYSTEMS GROUP
GOLDEN, COLORADO 80402

881 Hillside Remedial Action
Building 830 HVAC And Plumbing Plan

SIZE	DRAWING NUMBER	ISSUE	SHEET
D	38548-503		28 of 35

ENGINEERING-SCIENCE
Denver, Colorado

ES

COMPUTER GENERATED DRAWING NO MANUAL CHANGES ALLOWED

NOTES:

THE MANUFACTURER OF TREATMENT EQUIPMENT WAS NOT KNOWN AT THE TIME DRAWINGS WERE DEVELOPED. EXACT LOCATION OF PIPING AND EQUIPMENT MUST BE COORDINATED WITH OWNER USING APPROVED EQUIPMENT SHOP DRAWINGS.

THIS SHEET INTENTIONALLY LEFT BLANK

FOR TITLE II REVIEW NOT FOR CONSTRUCTION

ISSUE	DESCRIPTION	DATE	RFP	DOE CLASS	JOB NO.
A	ORIGINAL ISSUE			TFF	986147

KEYWORDS

TOLERANCES FRACT. ± ANGLE ± DEC. ± UNLESS NOTED OTHERWISE

REMOVE BURRS AND SHARP EDGES

NEXT ASSEMBLY

MASTER

SCALE:

	BY	DATE
DESIGNED		
DRAWN		
CHECKED		
APPROVED		
SUBMITTED		
APPROVED RFP		
APPROVED DOE		

U.S. DEPARTMENT OF ENERGY
ROCKY FLATS AREA OFFICE GOLDEN, COLORADO

Rockwell International
ROCKY FLATS PLANT
ENERGY SYSTEMS GROUP
GOLDEN, COLORADO 80402

881 Hillside Remedial Action
Building 830
Equipment Location Details

SIZE	DRAWING NUMBER	ISSUE	SHEET
D	38548-502		27 OF 35

ENGINEERING-SCIENCE
Denver, Colorado

ES

COMPUTER GENERATED DRAWING NO MANUAL CHANGES ALLOWED

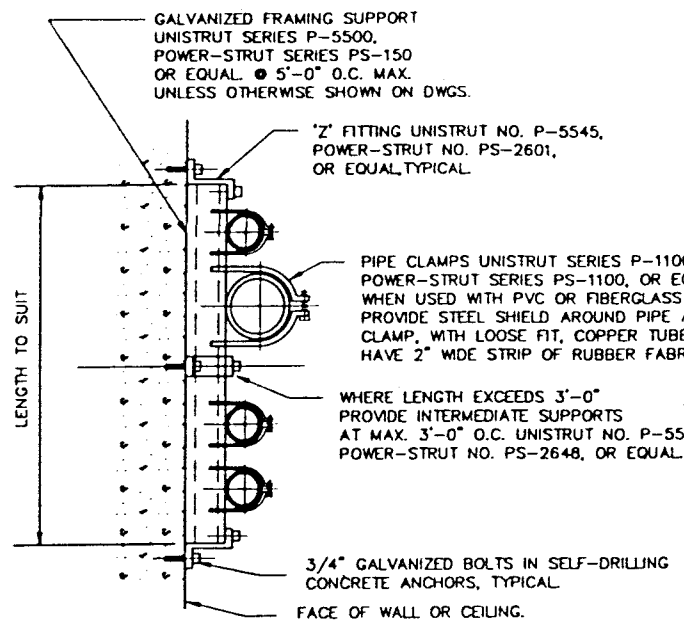

DETAIL 1
FLUSH MOUNTED PIPE SUPPORT

38548-400 NOT TO SCALE

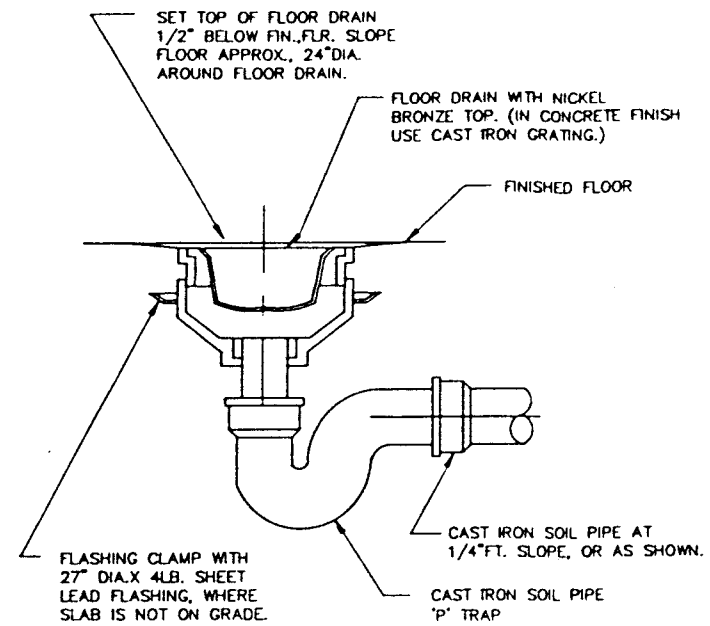

DETAIL 2
FLOOR DRAIN

388548-200,401 NOT TO SCALE

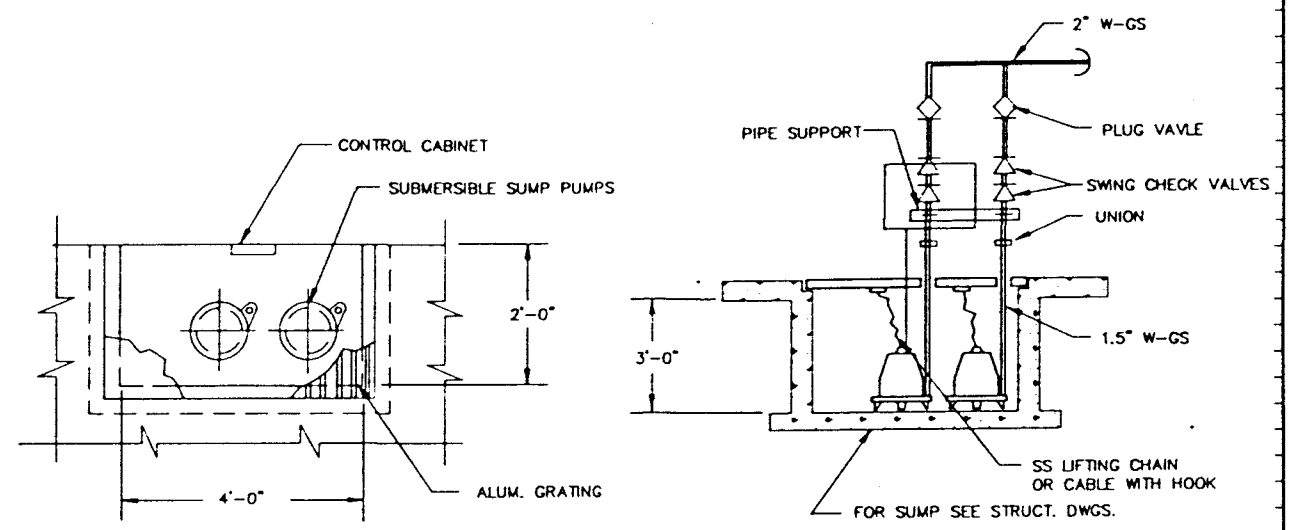

DETAIL 3
BUILDING 830 DUPLEX SUMP PUMPS

38548-500 NOT TO SCALE

NOTE:
1.) FOR ENTERING DRAINS, SEE DWGS.

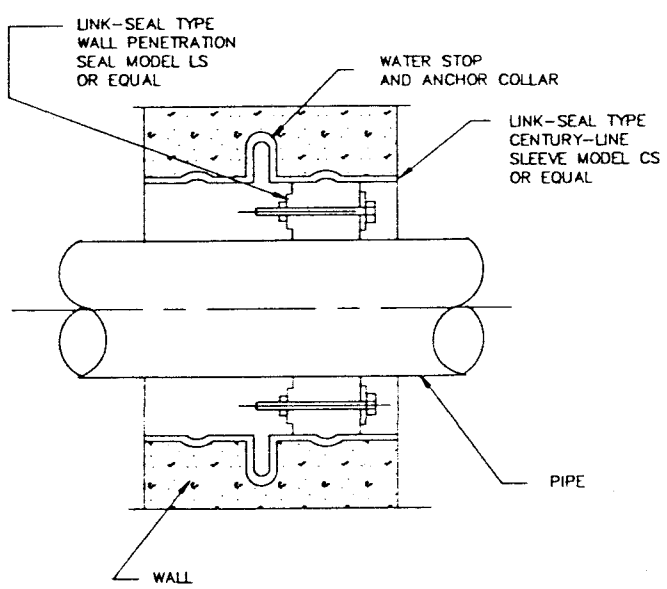

DETAIL 4
CONCRETE PIPE WALL PENETRATION

38548-400 NOT TO SCALE

NOTE:
1.)FOR CORE DRILLED OPENINGS IN EXISTING DRY WALLS DELETE PIPE SLEEVE.

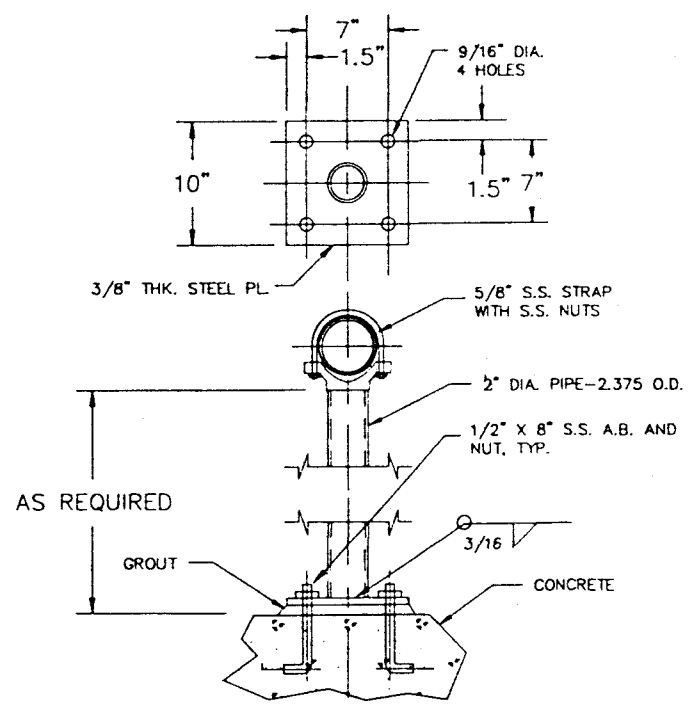

NOTE:
1.) PIPE SHALL BE SCHEDULE 40 ASTM A53 GRADE B.
2.) PROTECTIVE COATING, SEE SPECS.
3.) S.S. STRAPS AND NUTS SHALL NOT BE COATED.

DETAIL 5
FLOOR STAND

38548-400,500 NOT TO SCALE

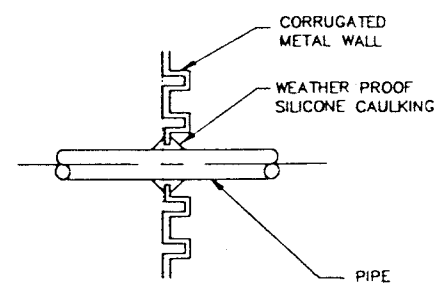

NOTE:
1.) DRILL HOLE IN CORRUGATED METAL WALL A MAXIMUM OF 1/4" GREATER THAN OUTSIDE DIAMETER OF PIPE.

APPLY CAULKING AFTER PIPE IS SUPPORTED ON BOTH SIDES OF WALL IN ITS FINAL POSITION.

DETAIL-6
CORRUGATED METAL WALL PIPE PENETRATION

38548-400 NOT TO SCALE

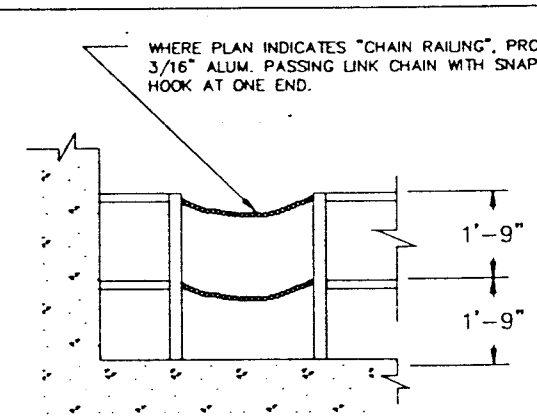

NOTE:
ALL RAILINGS SHALL BE JOB MEASURED BEFORE FABRICATION.
NO FIELD CUTTING OR WELDING WILL BE PERMITTED.
RALINGS WHICH DO NOT FIT MOUNTINGS PREVIOUSLY SET WILL BE REJECTED.

DETAIL 7
HANDRAILING

38548-300 NOT TO SCALE

FOR TITLE II REVIEW NOT FOR CONSTRUCTION

ISSUE	DESCRIPTION	DATE	RFP	DOE	CLASS	JOB NO.
A	ORIGINAL ISSUE				7%	986147

KEYWORDS

TOLERANCES: FRACT ±; ANGLE ±°; DEC. ±; UNLESS NOTED OTHERWISE; REMOVE BURRS AND SHARP EDGES; NEXT ASSEMBLY

	BY	DATE
DESIGNED		
DRAWN	MS	
CHECKED		
APPROVED		
SUBMITTED		
APPROVED RFP		
APPROVED DOE		

MASTER

SCALE: NOTED

U.S. DEPARTMENT OF ENERGY
ROCKY FLATS AREA OFFICE GOLDEN, COLORADO

Rockwell International
ROCKY FLATS PLANT
ENERGY SYSTEMS GROUP
GOLDEN, COLORADO 80402

881 Hillside Remedial Action
MECHANICAL DETAILS

SIZE	DRAWING NUMBER	ISSUE	SHEET
D	38548-504		29 OF 35

ENGINEERING-SCIENCE
Denver, Colorado

ES

COMPUTER GENERATED DRAWING NO MANUAL CHANGES ALLOWED

LIGHTING FIXTURE SCHEDULE

TYPE	DESCRIPTION	MANUFACTURER AND CATALOG NO.	ALTERNATE MANUFACTURERS		LAMPS	REMARKS
A	POLE MOUNTED HIGH PRESSURE SODIUM FLOODLIGHT W/SLIPFITTER	GENERAL ELECTRIC V1FF15S1M7X6GRK	CROUSE-HINDS MVD SERIES	KEENE CWH SERIES	1-150 WATT HPS	120 VOLTS, SEE NOTE 1
B	4' SURFACE MOUNTED FLUORESCENT WITH WRAPAROUND ACRYLIC DIFFUSER	LITHONIA VC440A120ES	GLOBE	PRUDENTIAL	4-F40CW	
C	WALL MOUNTED EXIT LIGHT WITH SELF CONTAINED EMERG. PWR. UNIT	DUAL LITE EWRWW-SG	EXIDE	LITHONIA		SEE NOTE 2
D						
E						
F						

NOTES: (LIGHTING FIXTURE SCHEDULE)

1. POLES SHALL BE 20 FOOT ALUMINUM WITH POLE TOP TENON AND BRACKETS, GENERAL ELECTRIC NO. C690H62X FOR POLES WITH ONE FIXTURE AND GENERAL ELECTRIC NO. C690H63X FOR POLES WITH TWO FIXTURES.
2. PROVIDE UNIT COMPLETE WITH LAMPS, RED LETTERS AND WHITE STENCIL BACKGROUND. MOUNT ON WALL 6" ABOVE DOOR TO BOTTOM OF FIXTURE.

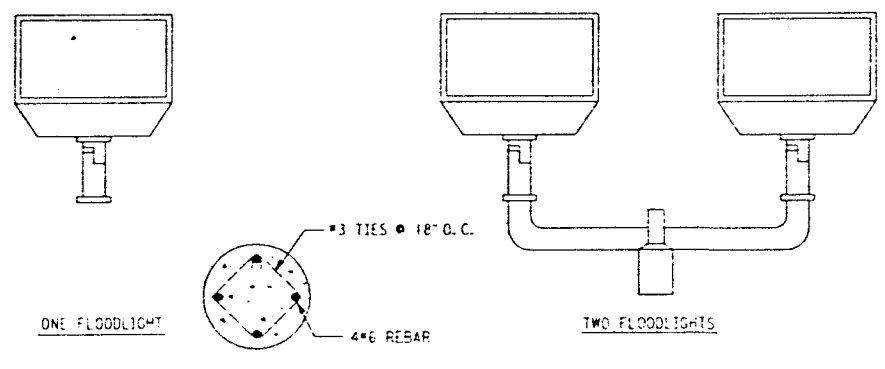

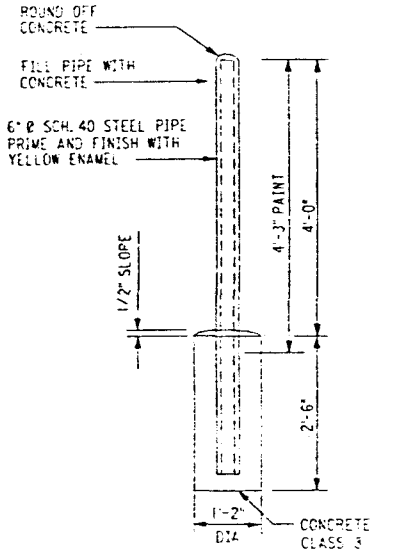

STATIONARY GUARD POST

NOT TO SCALE

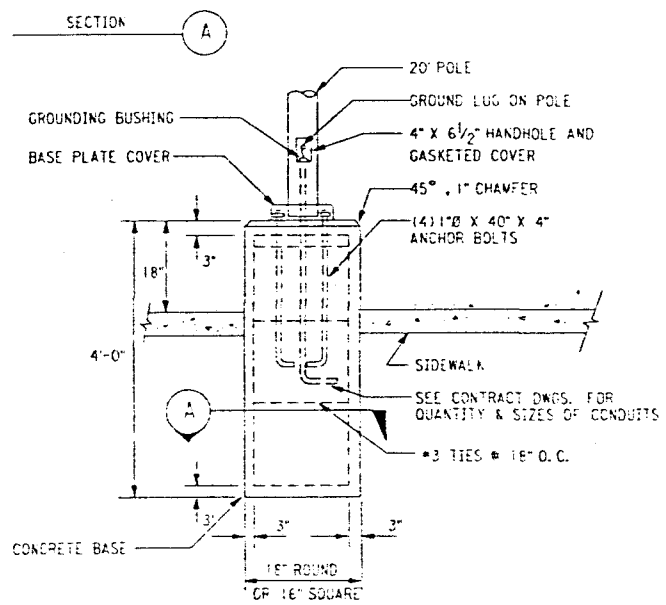

LIGHTING STANDARD BASE DETAIL

NOT TO SCALE

ELECTRICAL SYMBOLS

SINGLE LINE DIAGRAMS

- AMMETER
- VOLTMETER
- METER
- KILOWATT HOUR METER
- AMMETER SWITCH
- VOLTMETER SWITCH
- GROUND FAULT INTERRUPTER
- CURRENT TRANSFORMER
- POTENTIAL TRANSFORMER
- POWER TRANSFORMER (1)
- CONTROL TRANSFORMER (2)
- DRAW OUT TYPE EQUIPMENT
- DRAW OUT TYPE HIGH VOLTAGE MOTOR STARTER
- PLUG-IN TYPE EQUIPMENT
- CIRCUIT BREAKER, 3 POLE UNLESS OTHERWISE INDICATED
- DISCONNECT SWITCH, 3 POLE UNLESS OTHERWISE INDICATED
- OIL FUSE CUTOUTS
- FUSE
- TRANSFER SWITCH, AUTOMATIC
- MAGNETIC MOTOR STARTER, "1" INDICATES SIZE 1, R INDICATES REDUCED VOLTAGE, 2S INDICATES 2 SPEED, R INDICATES REVERSING.
- MAGNETIC CONTACTOR
- CONTROL STATION, PUSHBUTTON STATION OR SELECTOR SWITCH. SEE CONTROL WIRING DIAGRAMS FOR REQUIREMENTS.
- DISCONNECT SWITCH, 600 VOLT, 3 POLE, NON-FUSED UNLESS OTHERWISE INDICATED.
- MOTOR, 10 HORSEPOWER
- CONDUIT NUMBER. SEE CONDUIT AND WIRING SCHEDULE FOR SIZES AND QUANTITIES OF CONDUIT AND WIRES.
- GROUND
- KIRK KEY INTERLOCKING OF EQUIPMENT
- EQUIPMENT FURNISHED, INSTALLED AND CONNECTED UNDER ANOTHER SECTION OF THE CONTRACT.

NOTES: (ELECTRICAL SYMBOLS)

1. POWER TRANSFORMERS SHALL BE DRY TYPE 480-208Y/120 VOLTS, 3 PHASE 4 WIRE UNLESS OTHERWISE INDICATED.
2. CONTROL TRANSFORMER SHALL BE DRY TYPE 480-120 VOLTS, 1 PHASE UNLESS OTHERWISE INDICATED. SEE CONTROL WIRING DIAGRAMS FOR USE OF 120 VOLT CONTROL CIRCUITS. CONTROL TRANSFORMERS SHALL BE SIZED TO HANDLE THE LOADS OF ALL RELAYS, PILOT LIGHTS, ETC. CONNECTED THERETO PLUS 50 VA EXTRA CAPACITY.
3. LOCATED IN OR ON MOTOR CONTROL CENTER UNLESS OTHERWISE INDICATED.

NOT USED ON THIS PROJECT

CONTROL WIRING DIAGRAMS

NORMALLY OPEN	NORMALLY CLOSED	DEVICE
		CONTACT
		LIMIT SWITCH
		LIMIT SWITCH HELD CLOSED
		LIMIT SWITCH HELD OPEN
		PRESSURE AND VACUUM SWITCHES
		LIQUID LEVEL SWITCH
		TEMPERATURE ACTUATED SWITCH
		FLOW SWITCH (AIR, WATER, ETC.)
		PUSH BUTTON SINGLE CIRCUIT MOMENTARY CONTACT. (3)
		PUSH BUTTON SINGLE CIRCUIT LOCK-OUT (LOCATED AT MOTOR UNLESS OTHERWISE NOTED)
		TIMED CONTACT - CONTACT ACTION RETARDED ON ENERGIZATION.
		TIMED CONTACT - CONTACT ACTION RETARDED ON DE-ENERGIZATION.
		PILOT LIGHT. Y=YELLOW, R=RED, A=AMBER, B=BROWN, W=WHITE, G=GREEN. (3)
		GROUND
		FUSE (3)
		HAND-OFF AUTO SWITCH
		TWO POSITION SELECTOR SWITCH (3)
		THREE POSITION SELECTOR SWITCH (3)
		RELAY (1)
		STARTER COIL (3)
		TIME DELAY RELAY. (10-30 SECONDS UNLESS OTHERWISE NOTED) (3)
		MOTOR STARTER OVERLOAD HEATERS
		CONTROL POWER TRANSFORMER. (2)(3)
		MANUAL MOTOR STARTER
		ON-OFF SWITCH. (3)
		SOLENOID OPERATED CONTROL VALVE
		120 VOLT, 1 PHASE, MOTOR
	RTM	RUNNING TIME METER. (3) (ELAPSED TIME METER)
		SPACE HEATERS. (LOCATED AT MOTOR UNLESS OTHERWISE NOTED).
		TERMINALS IN MOTOR CONTROL CENTER
		CONTACT OR DEVICE REMOTE FROM MOTOR CONTROL CENTER
O/L		MOTOR STARTER OVERLOAD AUXILIARY (ALARM) NORMALLY OPEN CONTACT

NOT USED ON THIS PROJECT

PLANS

- CONDUIT RUN CONCEALED UNDER SLAB OR BELOW GRADE. (CONCEALED IN SLAB WHERE SO NOTED OR WHERE ALLOWED PER SPECIFICATIONS).
- CONDUIT RUN EXPOSED UNLESS OTHERWISE NOTED
- HASH MARKS INDICATE QUANTITY OF #12 WIRES IN CONDUIT. EXCEPT NO HASH MARKS=3/4", 2#12 UNLESS OTHERWISE NOTED.
  - 3/4", 3#12
  - 3/4", 4#12
  - 3/4", 5#12
  - 1", 6#12
  - 1", 7#12
  - 1", 8#12
- (-1, 3) HOMERUN TO PANEL L, CIRCUITS 1 AND 3
- GROUND WIRE
- CONDUIT UP (OUT TOP OF EQUIPMENT)
- CONDUIT DOWN (OUT BOTTOM OF EQUIPMENT)
- CONDUIT STUBBED OUT AND CAPPED
- LIGHTING FIXTURE MOUNTED ON POLE OR POST OR ABOVE PLATFORM
- BRACKET MOUNTED LIGHTING FIXTURE
- FLOODLIGHT
- FLUORESCENT LIGHTING FIXTURE
- EXIT LIGHT
- A / 100 — LIGHTING FIXTURE TYPE A, 100 WATTS. SEE LIGHTING FIXTURE SCHEDULE
- S — SINGLE POLE, SINGLE THROW TOGGLE SWITCH
- S_3 — THREE-WAY TOGGLE SWITCH
- S_M — MANUAL MOTOR STARTER

  (AT +48" OR AS NOTED)
- S_a — OUTLETS SHOWN WITH SUBSCRIPT "a" ADJACENT TO THEM SHALL BE CONTROLLED BY S_a
- DUPLEX CONVENIENCE RECEPTACLE AT +12" OR AS NOTED
- JUNCTION BOX, SIZE AS REQUIRED BY CODE
- THERMOSTAT OUTLET AT +54"
- TELEPHONE OUTLET AT +12" OR AS NOTED
- HORN
- CD — CONTROL DEVICE
  - P =PRESSURE SWITCH
  - L =LIMIT SWITCH
  - F =FLOAT SWITCH
  - FL=FLOW SWITCH
  - V =CONTROL VALVE
- CONTROL STATION. PUSHBUTTON STATION OR SELECTOR SWITCH. SEE CONTROL WIRING DIAGRAMS FOR REQUIREMENTS.
- MOTOR
- GROUND WELL
- DISCONNECT SWITCH. SEE SINGLE LINE DIAGRAM FOR SIZE.
- LIGHTING PANEL, SURFACE MOUNTED.
- SWITCHBOARD, DISTRIBUTION PANEL OR MOTOR CONTROL CENTER
- (12) — CONDUIT NUMBER 12. SEE CONDUIT AND WIRING SCHEDULE FOR SIZES AND QUANTITIES OF CONDUIT AND WIRES.
- +12" — INDICATES HEIGHT FROM FINISHED FLOOR OR GRADE TO CENTERLINE OF DEVICE.
- (1) — INDICATES TO REFER TO NOTE (1) ON DRAWING
- W.P. — WEATHERPROOF. PROVIDE GASKETS AS REQUIRED
- C.O. — CONDUIT ONLY
- FE-184 — INSTRUMENTATION DEVICE. SEE PROCESS AND INSTRUMENTATION DRAWINGS FOR DESCRIPTIONS.
- GROUND ROD
- GUARD POST

NOT USED ON THIS PROJECT

PART	QUAN.	DESCRIPTION	MATERIAL

A	ORIGINAL ISSUE		

DESCRIPTION		BY	DATE
TOLERANCES FRACT.± ANGLES± DECS. UNLESS NOTED OTHERWISE	DESIGNED		
	DRAWN		
	CHECKED		
	APPROVED		
REMOVE BURRS AND SHARP EDGES			
NEXT ASSEMBLY			
	SUBMITTED		
SCALE NONE	APPROVED		
	APPROVED		

DATE | BY | DOE KLASS JOB NO.

U.S. DEPARTMENT OF ENERGY
ROCKY FLATS AREA OFFICE GOLDEN, COLORADO

Rockwell International
ROCKY FLATS PLANT
GOLDEN, COLORADO 80401

881 Hillside Remedial Action

ELECTRICAL SYMBOLS AND LIGHTING FIXTURE SCHEDULE

SIZE: D | DRAWING NUMBER 38548-700 | ISSUE | SHEET 30 OF 35

ENGINEERING-SCIENCE
Denver, Colorado

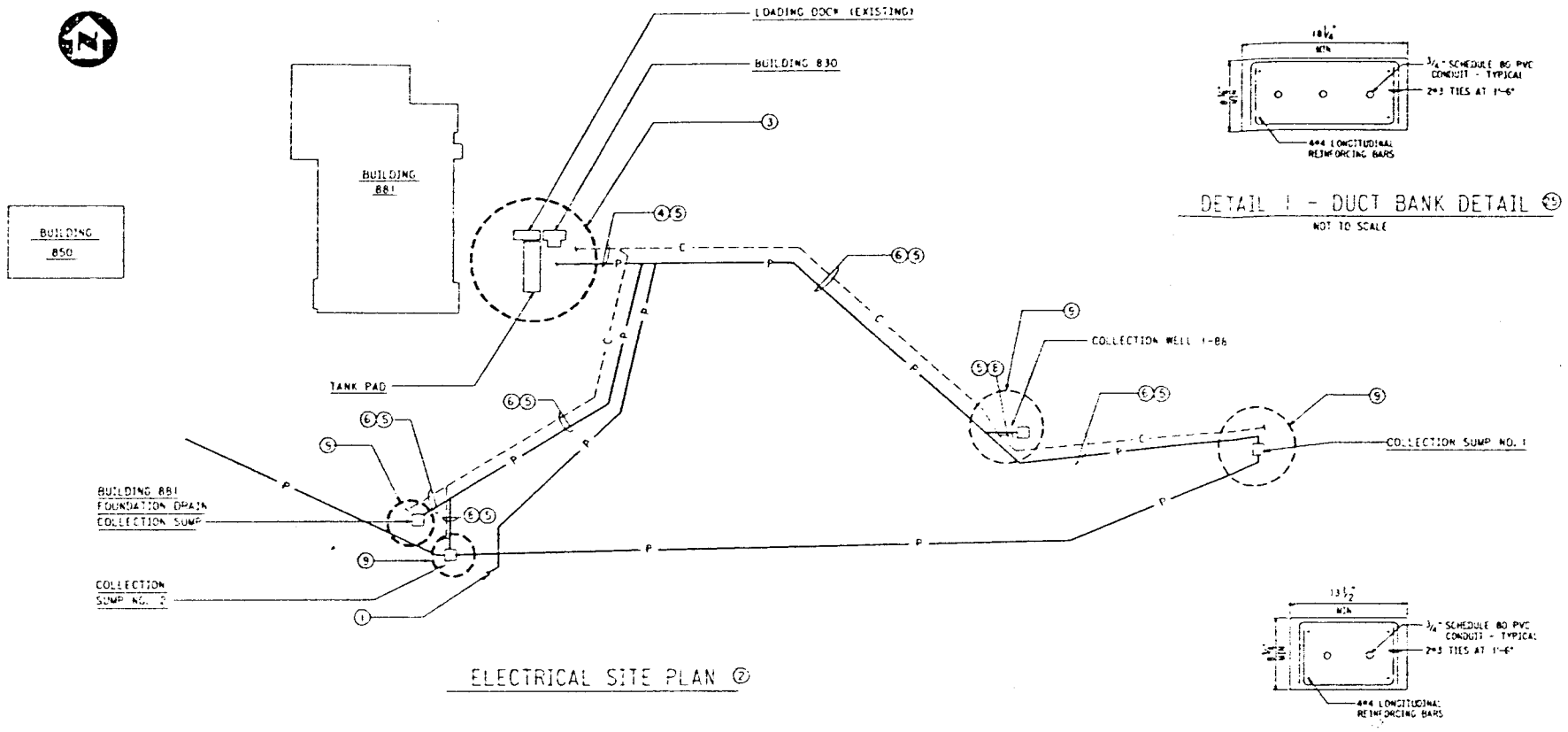

ELECTRICAL SITE PLAN ⑦

GRAPHIC SCALE: 0 25 50 100 200 500

SYMBOLS FOR THIS PLAN ONLY

— — C — — — DIRECT BURIED CABLE

—— P —— BURIED PIPE(S)

DETAIL 1 - DUCT BANK DETAIL ㉕

NOT TO SCALE

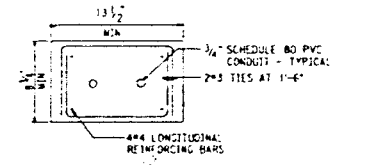

DETAIL 2 - DUCT BANK DETAIL ㉖

NOT TO SCALE

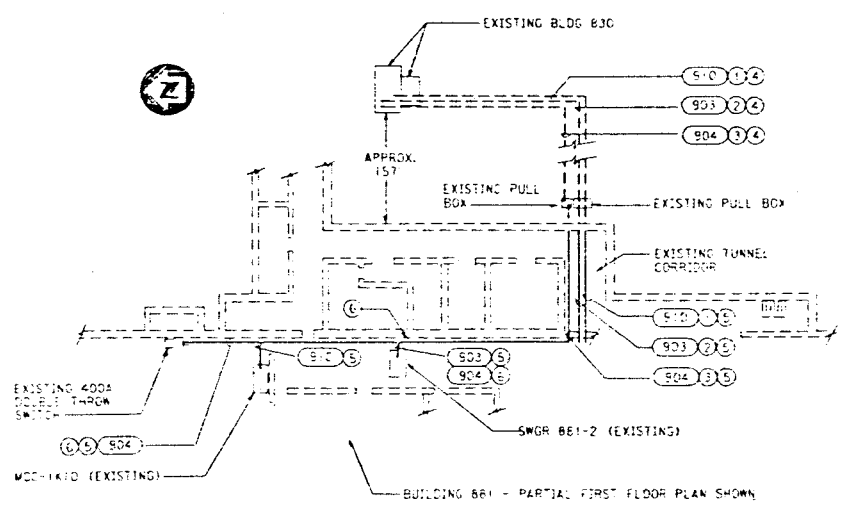

POWER FEEDER PLAN

SCALE: 1/8" = 1'-0"

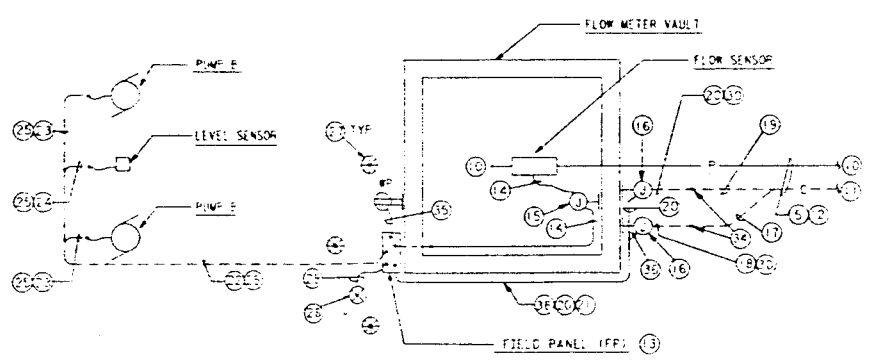

COLLECTION SUMP (OR COLLECTION WELL ㉖) AND METER VAULT TYPICAL ELECTRICAL PLAN

SCALE: 1/2" = 1'-0"

PART	QUAN.	DESCRIPTION	MATERIAL

NOTES: (CONTINUED)

21. RUN CONDUITS ALONG VAULT WALL ABOVE GRADE.

22. a. FOR COLLECTION SUMPS NO. 1 AND NO. 2 AND FOR BLDG. 881 COLLECTION SUMPS
 - DUCT BANK WITH TWO CONDUITS PER NOTE 23 AND ONE CONDUIT PER NOTE 24. ㉔
 - DUCT BANK SHALL BE PER DETAIL 1 ON THIS DRAWING.
 b. FOR COLLECTION WELL 1-88:
 - DUCT BANK WITH ONE CONDUIT PER NOTES 23 AND ONE CONDUIT PER NOTE 24. ㉔
 - DUCT BANK SHALL BE PER DETAIL 2 ON THIS DRAWING

23. 3/4", 3*12 AND 1*12 GROUND. ㉕

24. 3/4", 2*14, OR CABLE PROVIDED WITH LEVEL SENSOR, OR AS REQUIRED BY DEVICE. ㉔

25. a. ENCASE 3/4" SCHEDULE 80 PVC CONDUIT IN 4 INCHES OF CONCRETE ON ALL SIDES.
 b. INSTALL AT 24" BELOW GRADE TO TOP OF CONCRETE.
 c. STUB-UP WITH SCHEDULE 80 PVC CONDUIT. CONNECT TO FLEXIBLE CONDUIT AT MINIMUM 1 FOOT ABOVE GRADE AT MOTORS AND LEVEL SENSORS.

26. COLLECTION WELL 1-88 WILL BE PROVIDED WITH ONLY ONE PUMP INSTEAD OF TWO. ALL CONNECTIONS AS SHOWN IN THIS PLAN SHALL BE INSTALLED EXCEPT CABLE AND CONDUIT FOR SECOND PUMP.

27. GUARD POSTS.

28. BURIED GROUND ROD, COPPER - CLAD, 3/4 INCH DIAMETER, 10 FEET LONG.

29. NO. 10 BARE GROUND WIRE.

30. a. CONDUIT SHALL BE RUN BELOW GRADE TO LEVEL AT WHICH DIRECT BURIED CABLE IS ROUTED ABOVE PIPE (APPROX. 5 BELOW GRADE)
 b. CONDUIT SHALL BE ATTACHED TO VAULT WALL WITH CORROSION RESISTANT FITTINGS.
 c. CONDUIT SHALL MAKE A 90° ANGLE AT POINT WHERE BURIED CABLE IS TO EXTER. EXTEND CONDUIT FOR 1 FOOT PARALLEL TO PIPE.
 d. PROVIDE CONDUIT SEALING BUSHING AT END OF CONDUIT. SEAL CABLE AND ALL AROUND BUSHING EDGES WITH RTV SILICONE SEALANT.
 e. COAT CONDUIT COMPLETELY WITH CORROSION RESISTANT PROTECTIVE COATINGS.

31. DIRECT BURIED CONTROL CABLE, 12 CONDUCTOR #10.

32. DIRECT BURIED INSTRUMENTATION CABLE, 4 TWISTED PAIRS #16 INDIVIDUALLY SHIELDED, WITH OVERALL CABLE SHIELD.

34. TRANSITION FROM DIRECT BURIED CABLE TO CONDUIT PER NOTE 30.

35. 3/4", 2*12 AND 1*12 GROUND.

36. 1 1/4" RIGID GALVANIZED STEEL CONDUIT WITH CABLE PER NOTE 7 ROUTED IN IT.

NOTES - POWER FEEDER PLAN

1. EXISTING 2", 4*6.
2. EXISTING 3", 4*4/0, 12*14.
3. EXISTING 3", 4*4/0.
4. REMOVE BELOW GRADE CONDUITS AND CONDUCTORS BETWEEN EXISTING BUILDING 830 AND EXISTING PULL BOX.
5. REMOVE CONDUCTORS FROM CONDUIT.
6. INTERCEPT EXISTING CONDUIT 904 AND EXTEND IT TO SWITCHGEAR 881-2 (POSITION TO BE THE SAME AS CONDUIT 903). REMOVE CONDUIT FROM POINT OF INTERCEPTION TO 400 A DOUBLE THROW SWITCH.

NOTES - ELECTRICAL SITE PLAN AND COLLECTION SUMP PLAN

1. FOR CONTINUATION OF EFFLUENT PIPELINE, SEE DRAWING 38548-100, SHEET 6.

2. DIRECT BURIED POWER, CONTROL AND INSTRUMENTATION CABLES SHALL BE RUN WITH THE BURIED EFFLUENT AND INFLUENT PIPELINES. ALL BUILDING LOCATIONS, TANK LOCATIONS, PIPE ROUTINGS AND LENGTHS OF PIPING AS SHOWN ON THIS DRAWING ARE APPROXIMATE. VERIFY ALL LOCATIONS AND PIPE ROUTINGS WITH APPROPRIATE PROJECT DRAWINGS.

3. SEE DRAWING 38548-704 FOR ELECTRICAL PLAN OF THIS AREA.

4. EFFLUENT PIPELINE, INFLUENT PIPELINE AND DIRECT BURIED CABLES SHALL BE ROUTED IN SAME TRENCH AS SHOWN IN DETAIL R, SHEET 17. CABLES BURIED IN TRENCH SHALL BE:
 a. TWO (2) POWER CABLES PER NOTE 7.
 b. TWO (2) CONTROL CABLES PER NOTE 31.
 c. TWO (2) INSTRUMENTATION CABLES PER NOTE 32.

5. a. ALL DIRECT BURIED CABLES SHALL BE INSTALLED ON A MINIMUM 6 INCH BED OF SAND.
 b. A MINIMUM OF 6 INCHES OF SAND SHALL BE INSTALLED BETWEEN ANY CABLE AND THE TRENCH WALL AND BETWEEN ANY CABLE AND TRENCH BACKFILL.
 c. A MINIMUM OF 4 INCHES OF SAND SHALL BE INSTALLED BETWEEN ANY TWO BURIED CABLES.
 d. ALL CABLES SHALL BE SNAKED SUFFICIENTLY TO ALLOW SLACK WHEN THE EARTH SETTLES.
 e. A MINIMUM OF 4 FEET OF BACKFILL OR TOP SOIL IS REQUIRED ABOVE SAND ON TOP OF DIRECT BURIED CABLE.

6. INFLUENT PIPELINE AND DIRECT BURIED CABLES SHALL BE ROUTED IN SAME TRENCH AS SHOWN IN DETAIL R, SHEET 17. CABLES BURIED IN TRENCH SHALL BE:
 a. ONE (1) POWER CABLE PER NOTE 7.
 b. ONE (1) CONTROL CABLE PER NOTE 31.
 c. ONE (1) INSTRUMENTATION CABLE PER NOTE 32.

7. POWER CABLE, DIRECT BURIED TYPE, 4 CONDUCTOR NO. 1/0.

8. SAME AS NOTE 6 EXCEPT THAT TWO CABLES OF EACH TYPE SHALL BE ROUTED IN TRENCH.

9. SEE "COLLECTION SUMP FOR COLLECTION WELL" AND METER VAULT - TYPICAL ELECTRICAL PLAN" FOR PLAN OF THIS AREA.

10. SEE ELECTRICAL SITE PLAN AND OTHER DRAWINGS FOR THIS PROJECT WHICH SHOW CONTINUATION AND ROUTING OF BURIED INFLUENT PIPELINES.

11. DIRECT BURIED CABLES RUN WITH PIPELINE. SEE ELECTRICAL SITE PLAN ON THIS DRAWING FOR CONTINUATION.

12. a. NOTE 6 APPLIES FOR COLLECTION SUMP NO. 1 AND BUILDING 881 FOUNDATION DRAIN COLLECTION SUMP.
 b. NOTE 6 APPLIES FOR COLLECTION SUMP NO. 2 AND COLLECTION WELL 1-88.

13. FP-100 (FIELD PANEL) FOR COLLECTION WELL 1-88
 FP-101 (FIELD PANEL) FOR COLLECTION SUMP NO. 1
 FP-102 (FIELD PANEL) FOR COLLECTION SUMP NO. 2
 FP-103 (FIELD PANEL) FOR BLDG. 881 COLLECTION SUMP

14. IT, CABLE PROVIDED WITH FLOW SENSOR OR 1 TWISTED PAIR #16 SHIELDED AND 2*12 WITH 1*12 GROUND, OR AS REQUIRED BY DEVICE.

15. NEMA 4X JUNCTION BOX, MOUNT AT APPROX. 4 FEET ABOVE FLOOR.

16. JUNCTION BOX, NEMA TYPE 4X, MOUNT ON VAULT WALL AS FOR AS POSSIBLE ABOVE GRADE.

17. a. FOR COLLECTION SUMP NO. 1 AND FOR BLDG. 881 COLLECTION SUMP: ONE (1) BURIED POWER CABLE PER NOTE 7.
 b. FOR COLLECTION WELL 1-88 AND FOR COLLECTION SUMP NO. 2: TWO (2) BURIED POWER CABLES PER NOTE 7.

18. a. FOR COLLECTION SUMP NO. 1 AND FOR BLDG. 881 COLLECTION SUMP: 1 1/4" RIGID GALVANIZED STEEL CONDUIT WITH CABLE PER NOTE 7 ROUTED IN IT.
 b. FOR COLLECTION WELL 1-88 AND FOR COLLECTION SUMP NO. 2: 1" RIGID GALVANIZED STEEL CONDUIT WITH TWO (2) CABLES PER NOTE 7 ROUTED IN IT.

19. a. FOR COLLECTION SUMP NO. 1 AND BLDG. 881 COLLECTION SUMP:
 - ONE (1) BURIED CONTROL CABLE PER NOTE 31.
 - ONE (1) BURIED INSTRUMENTATION CABLE PER NOTE 32.
 b. FOR COLLECTION WELL 1-88 AND FOR COLLECTION SUMP NO. 2:
 - TWO (2) BURIED CONTROL CABLES PER NOTE 31.
 - TWO (2) BURIED INSTRUMENTATION CABLES PER NOTE 32.

20. a. FOR COLLECTION SUMP NO. 1 AND FOR BLDG. 881 COLLECTION SUMP: 2 1/2" RIGID GALVANIZED STEEL CONDUIT WITH CABLES PER NOTE 19(a) ROUTED IN IT. SEE NOTE 30.
 b. FOR COLLECTION WELL 1-88 AND FOR COLLECTION SUMP NO. 2: 3 1/2" RIGID GALVANIZED STEEL CONDUIT WITH CABLES PER NOTE 19(b) ROUTED IN IT. SEE NOTE 30.

ENGINEERING-SCIENCE
Denver, Colorado

REV	DESCRIPTION	BY	DATE
A	ORIGINAL ISSUE		1/18

TOLERANCES: FRACT: ± ANGLES: ± DEC: ± UNLESS NOTED OTHERWISE. REMOVE BURRS AND SHARP EDGES. NEXT ASSEMBLY

DESIGNED / DRAWN / CHECKED / APPROVED / SUBMITTED / APPROVED BY / APPROVED DOE

DATE | REV | DOE | CLASS | JOB NO.

U.S. DEPARTMENT OF ENERGY
ROCKY FLATS AREA OFFICE GOLDEN, COLORADO

Rockwell International
ROCKY FLATS PLANT
GOLDEN, COLORADO 80401

881 Hillside Remedial Action
ELECTRICAL SITE PLAN, DETAILS AND POWER FEEDER PLAN

SCALE: AS NOTED | SIZE: D | DRAWING NUMBER: 38548-701 | ISSUE: 1 | SHEET: 31 OF 35

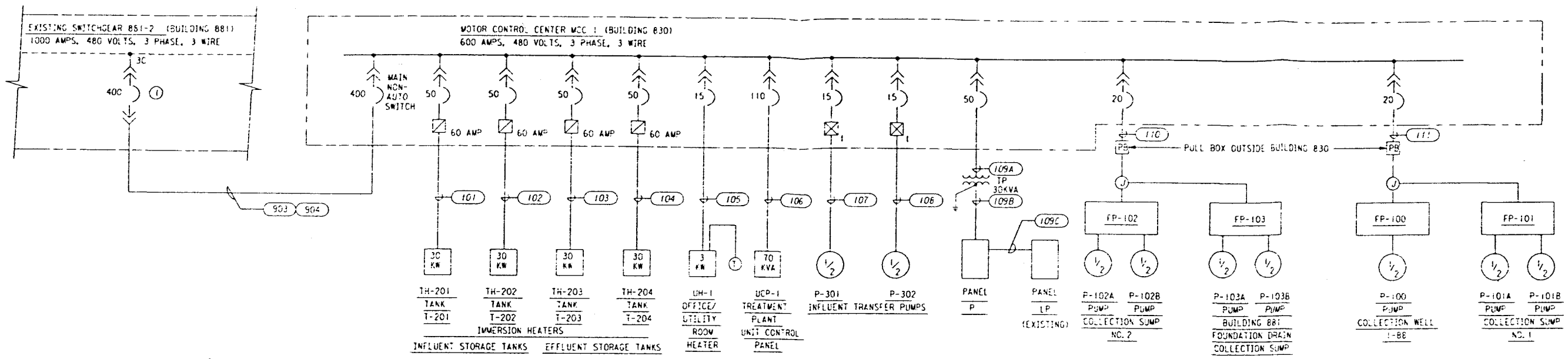

BUILDING 830 SINGLE LINE DIAGRAM

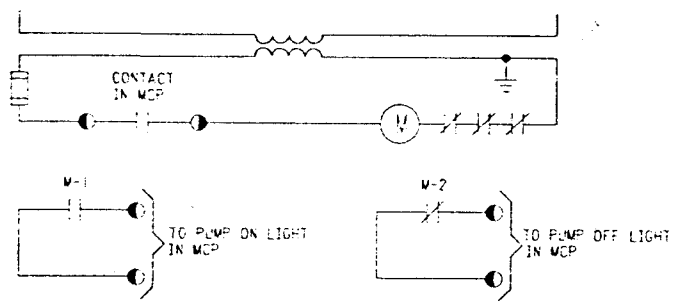

TYPE 1 DIAGRAM

TYPICAL FOR INFLUENT TRANSFER PUMPS P-301, P-302

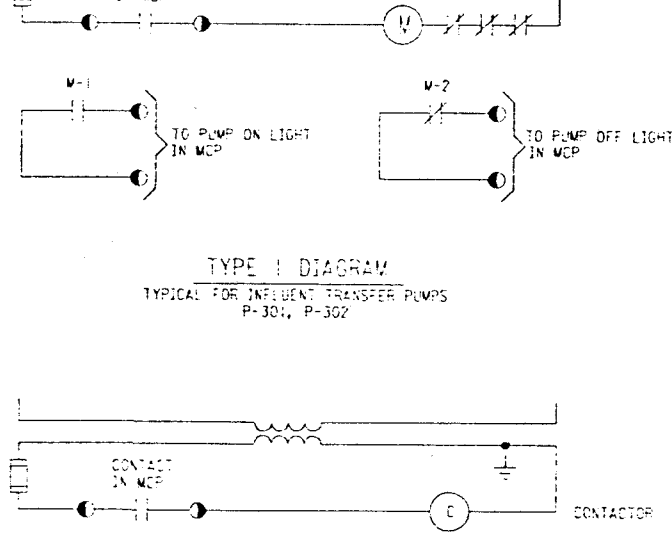

TYPE 2 DIAGRAM

TYPICAL FOR IMMERSION HEATERS TH-201, TH-202, TH-203, TH-204

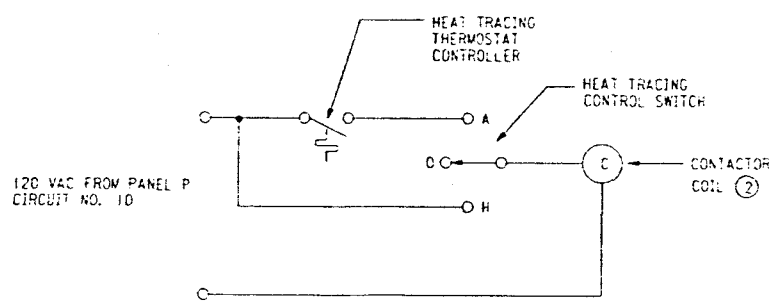

TYPE 3 DIAGRAM

CONTROL WIRING DIAGRAMS

NOTES:

1. INSTALL SOLID STATE TRIP DEVICE AND APPROPRIATE FAULT SENSORS TO PROVIDE A PROPERLY FUNCTIONING CIRCUIT BREAKER WITH ALL NECESSARY PROTECTIVE FUNCTIONS INCLUDING LONG TIME, SHORT TIME, AND GROUND FAULT. SOLID STATE TRIP DEVICE AND FAULT SENSORS SHALL BE SUITABLE AND APPROPRIATE FOR THE INSTALLED BREAKER AND SUBJECT TO THE APPROVAL OF THE ENGINEERS. CONTRACTOR SHALL PROVIDE COORDINATION STUDY WHICH SHOWS SETTINGS AND TIME-CURRENT CURVES OF THIS BREAKER, AND TIME-CURRENT CURVES OF DOWNSTREAM DEVICES. THE COORDINATION STUDY SHALL SHOW THAT ALL PROTECTIVE DEVICES ARE PROPERLY COORDINATED SUCH THAT PROTECTIVE DEVICES DOWNSTREAM OF MAIN BREAKER SHALL NORMALLY OPEN FIRST FOR ABNORMAL CURRENT CONDITIONS.
2. LOCATED AT PANEL P.

PART	QUAN.	DESCRIPTION	MATERIAL

A ORIGINAL ISSUE

U.S. DEPARTMENT OF ENERGY
ROCKY FLATS AREA OFFICE GOLDEN, COLORADO

Rockwell International
ROCKY FLATS PLANT
GOLDEN, COLORADO 80401

881 Hillside Remedial Action
BUILDING 830 SINGLE LINE DIAGRAM AND CONTROL WIRING DIAGRAMS

ENGINEERING-SCIENCE
Denver, Colorado

SCALE: NONE

D 38548-702 32 OF 35

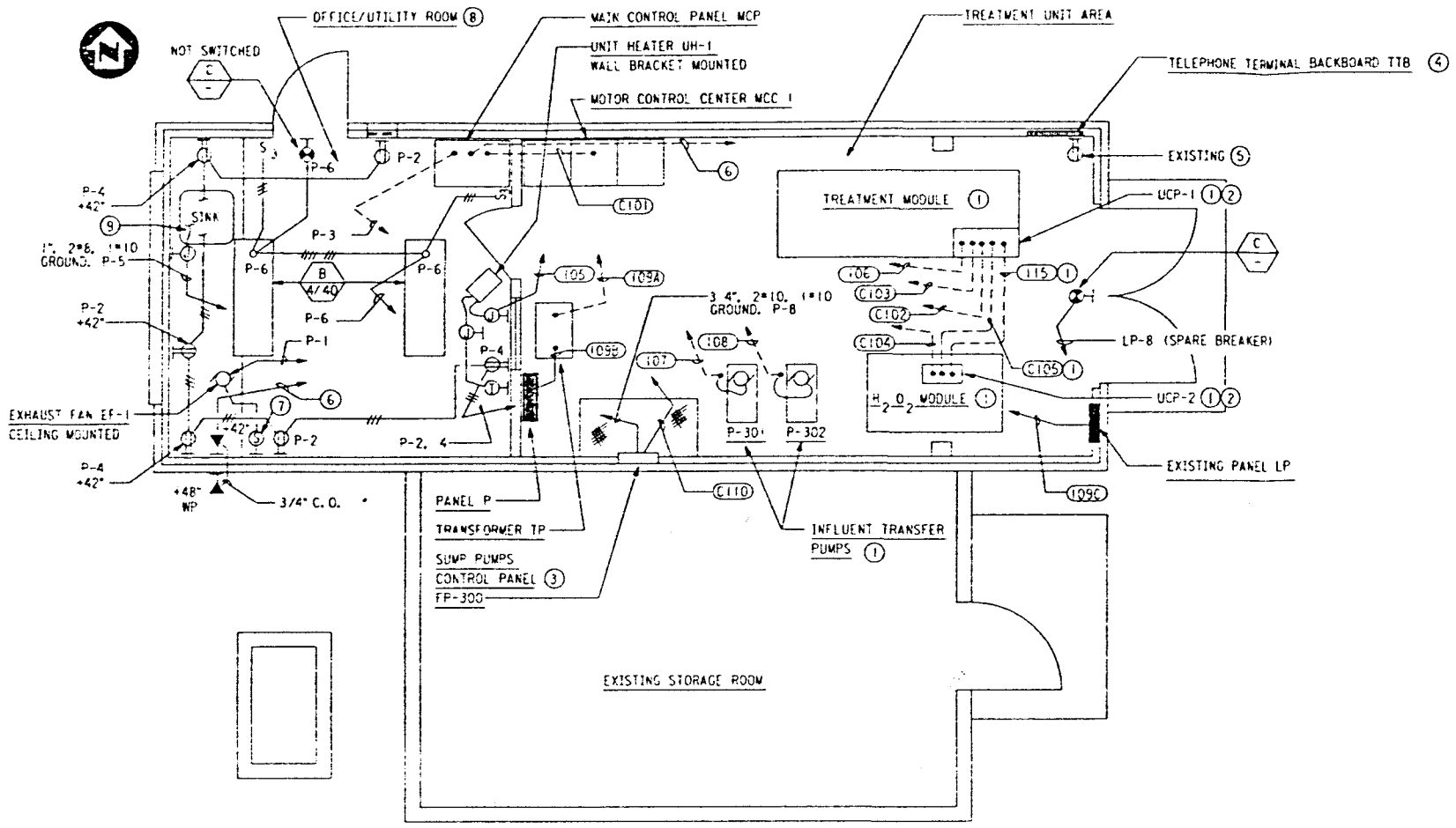

BUILDING 830 ELECTRICAL PLAN

SCALE: 3/8" = 1'-0"

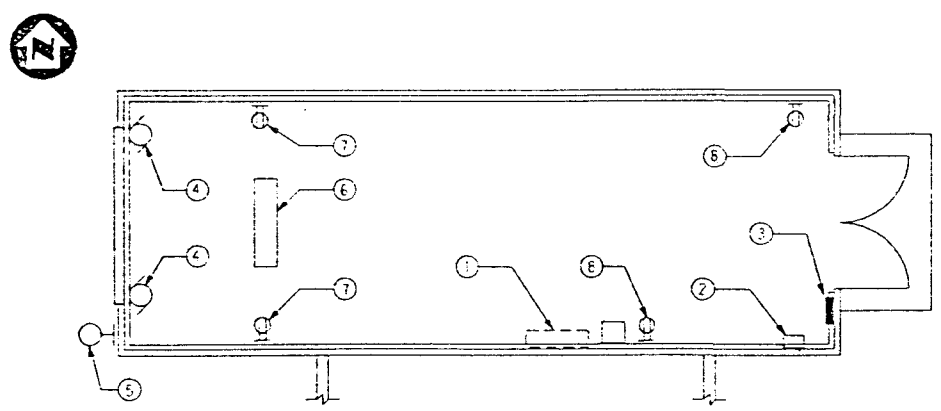

BUILDING 830 ELECTRICAL DEMOLITION PLAN

SCALE: 1/4" = 1'-0"

VERIFY LOCATION OF ALL EXISTING EQUIPMENT

PART	QUAN.	DESCRIPTION	MATERIAL

NOTES - ELECTRICAL PLAN

1. LOCATIONS OF INFLUENT TRANSFER PUMPS, TREATMENT MODULE, H_2O_2 MODULE, UCP-1 AND UCP-2 ARE BASED ON A SYSTEM OF A MANUFACTURER THAT MAY OR NOT SUPPLY THE SYSTEM. VERIFY WHICH SYSTEM WILL BE PROVIDED AND LOCATIONS OF COMPONENTS AND PROVIDE CIRCUITING TO COMPONENTS OF THE SYSTEM (MOTORS, CONTROLS, VALVES, CONTROL PANELS, ETC.) PER CODE AND SYSTEM SUPPLIERS RECOMMENDATIONS AS SHOWN ON THEIR APPROVED SHOP DRAWINGS.
2. EQUIPMENT SHALL BE LOCATED TO PROVIDE NATIONAL ELECTRICAL CODE, ARTICLE 110-16(a) CLEARANCES IN FRONT OF AND BETWEEN: UNIT CONTROL PANELS AND OTHER COMPONENTS.
3. SUMP PUMPS AND LEVEL SWITCHES WILL BE PREWIRED TO FP-300 AS PART OF THE SUMP PUMP SUPPLIERS PACKAGE.
4. 24" X 24" X 3/4" PLYWOOD BACKBOARD. MOUNT AT 2'-6" ABOVE FLOOR TO BOTTOM OF BACKBOARD.
5. VERIFY LOCATION OF EXISTING RECEPTACLE. IF IT IS NOT WITHIN 2'-0" HORIZONTALLY OF TTB EXTEND 3/4", 2#12 FROM EXISTING RECEPTACLE TO A NEW RECEPTACLE AT TTB.
6. 1" C.O. TO TTB.
7. EXHAUST FAN SOLID STATE SPEED CONTROLLER FURNISHED WITH FAN. INSTALL CONTROLLER AND PROVIDE "EXHAUST FAN" NAMEPLATE.
8. ALL CONDUITS IN OFFICE/UTILITY ROOM SHALL BE RUN CONCEALED ABOVE CEILING, IN WALLS OR BELOW SLAB.
9. CONNECT WATER HEATER BELOW SINK.

NOTES - ELECTRICAL DEMOLITION PLAN

1. REMOVE MAIN DISCONNECT, COMBINATION STARTER, TRANSFORMER FEEDER CIRCUIT BREAKER AND WIREWAY.
2. REMOVE TRANSFORMER, FEEDER TO TRANSFORMER FROM WIREWAY OF NOTE 1 AND FEEDER TO PANEL LP FROM TRANSFORMER.
3. PANEL LP TO REMAIN.
4. REMOVE MOTORIZED LOUVER DAMPER MOTORS AND CIRCUITING FROM MOTORS TO WIREWAY OF NOTE 1.
5. REMOVE ALARM DEVICE AND CIRCUITING FROM DEVICE TO TO WIREWAY OF NOTE 1.
6. REMOVE LIGHTING FIXTURE AND CIRCUITING TO LIGHTING FIXTURE.
7. REMOVE RECEPTACLE AND CIRCUITING TO RECEPTACLE.
8. EXISTING RECEPTACLE TO REMAIN.

A	ORIGINAL ISSUE		
MARK	DESCRIPTION	BY	DATE
TOLERANCES FRACT.: ANGLES: DEC.: UNLESS NOTED OTHERWISE	DESIGNED		
	DRAWN		
	CHECKED		
	APPROVED		
REMOVE BURRS AND SHARP EDGES			
NEXT ASSEMBLY			
	SUBMITTED		
SCALE: AS NOTED	APPROVED (CP)		
	APPROVED (DOE)		

DATE | BY | DOE KLASS | JOB NO.

U.S. DEPARTMENT OF ENERGY
ROCKY FLATS AREA OFFICE GOLDEN, COLORADO

Rockwell International
ROCKY FLATS PLANT
GOLDEN, COLORADO 80401

881 Hillside Remedial Action
BUILDING 830 ELECTRICAL PLANS

SIZE	DRAWING NUMBER	ISSUE	SHEET
D	38548-703		33 of 35

ENGINEERING-SCIENCE
Denver, Colorado

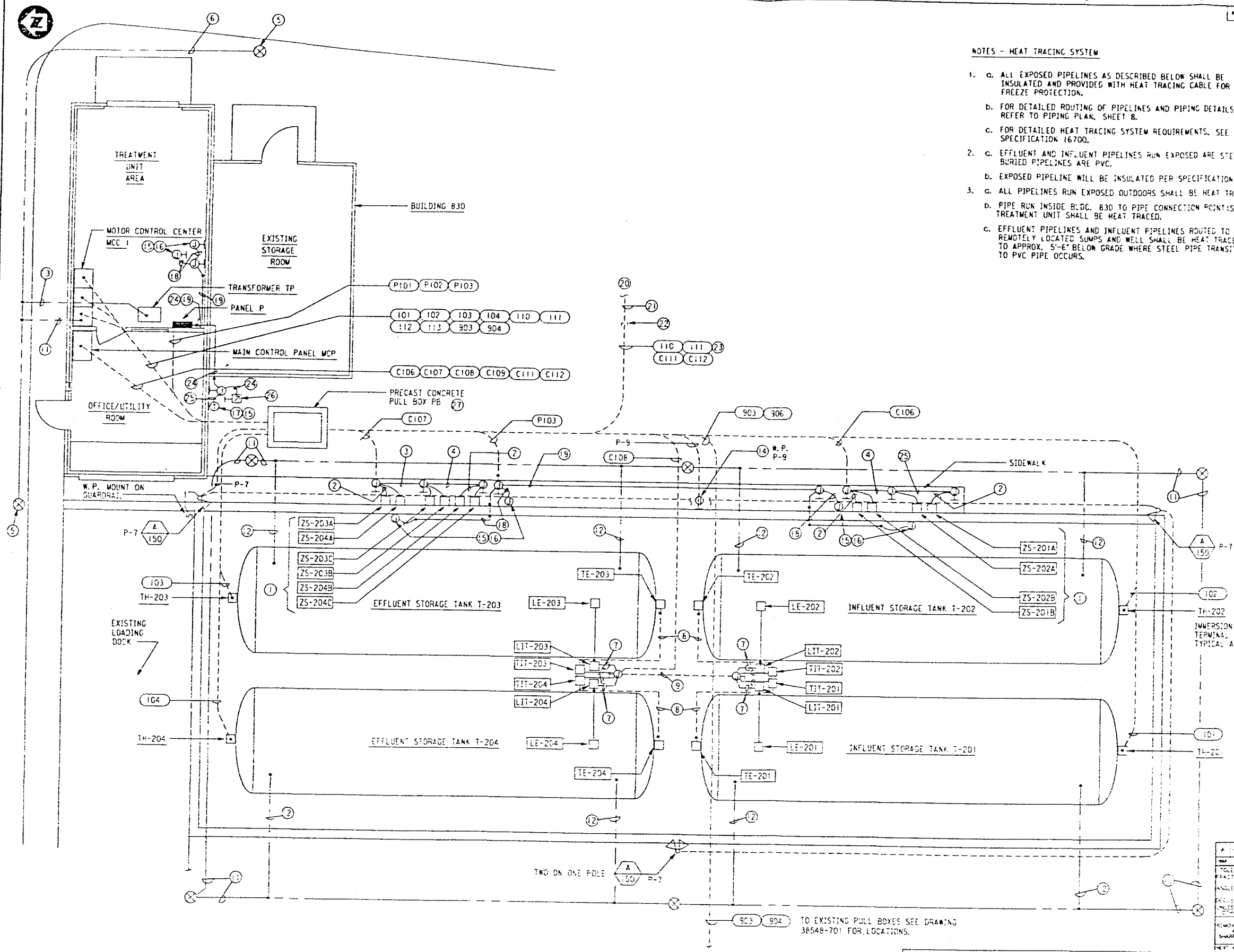

NOTES - HEAT TRACING SYSTEM

1. a. ALL EXPOSED PIPELINES AS DESCRIBED BELOW SHALL BE INSULATED AND PROVIDED WITH HEAT TRACING CABLE FOR FREEZE PROTECTION.
   b. FOR DETAILED ROUTING OF PIPELINES AND PIPING DETAILS REFER TO PIPING PLAN, SHEET 8.
   c. FOR DETAILED HEAT TRACING SYSTEM REQUIREMENTS, SEE SPECIFICATION 16700.
2. a. EFFLUENT AND INFLUENT PIPELINES RUN EXPOSED ARE STEEL. BURIED PIPELINES ARE PVC.
   b. EXPOSED PIPELINE WILL BE INSULATED PER SPECIFICATION 15180.
3. a. ALL PIPELINES RUN EXPOSED OUTDOORS SHALL BE HEAT TRACED.
   b. PIPE RUN INSIDE BLDG. 830 TO PIPE CONNECTION POINT(S) OF TREATMENT UNIT SHALL BE HEAT TRACED.
   c. EFFLUENT PIPELINES AND INFLUENT PIPELINES ROUTED TO REMOTELY LOCATED SUMPS AND WELL SHALL BE HEAT TRACED TO APPROX. 5'-6" BELOW GRADE WHERE STEEL PIPE TRANSITION TO PVC PIPE OCCURS.

NOTES:

1. COORDINATE LOCATIONS OF JUNCTION BOXES AND CONDUITS WITH PIPING AND VALVES.
2. 3/4", 4#14 TO VALVE LIMIT SWITCHES ZS-XXX (TYPICAL)
3. 1 1/2", 16#14.
4. 1", 8#14.
5. EXISTING GROUND ROD VERIFY LOCATION AT JOB SITE.
6. PROVIDE #2/0 BARE COPPER GROUND CONDUCTOR 24" BELOW GRADE.
7. 3/4", 1 TWISTED PAIR #16 SHIELDED.
8. 1", 2 TWISTED PAIR #16 SHIELDED.
9. 1", 4 TWISTED PAIR #16 SHIELDED.
10.
11. 1# 2/0 BARE COPPER GROUND CONDUCTOR.
12. 1#2 BARE COPPER GROUND CONDUCTOR. RISE UP TO TANK AT TANK SUPPORT SADDLE. TYPICAL AT TANKS.
13. 1#6 BARE COPPER GROUND CONDUCTOR.
14. MOUNT ON TANK CONTAINMENT WALL 2" FROM TOP OF WALL TO TOP OF RECEPTACLE.
15. THE EQUIPMENT COVERED BY THIS NOTE IS PART OF THE HEAT TRACING SYSTEM. SEE HEAT TRACING SYSTEM NOTES ON THIS DRAWING FOR CLARIFICATION.
16. a. JUNCTION BOX, NEMA 4X, MOUNTED AT POWER CONNECTION TRANSITION TO HEAT TRACING CABLE. CONNECT POWER CABLE TO HEAT TRACING CABLE CIRCUITS AS SHOWN ON CONTRACTOR FURNISHED PIPING ISOMETRIC DWGS AND DETAIL DWGS. (5)
    b. ALL LOCATIONS FOR JUNCTION BOXES (JB'S) SHOWN ARE APPROXIMATE. CONTRACTOR TO LOCATE JB'S AS REQUIRED PER ISOMETRIC DRAWINGS OF HEAT TRACED PIPING.
    c. PANEL P 120 VAC CIRCUITS FOR HEAT TRACING CIRCUITS SHALL BE SELECTED BY CONTRACTOR.
17. THERMOSTAT CONTROLLER FOR CONTROL OF HEAT TRACING CIRCUITS. CHEMELEX TYPE AMC-1A(BD)
18. 3/4", 2#10 AND 1#12 GROUND.
19. 1", 4#10 AND 1#12 GROUND.
20. FOR CONTINUATION OF DIRECT BURIED CABLE SEE ELECTRICAL SITE PLAN, DRAWING 38548-701.
21. EFFLUENT PIPELINE, INFLUENT PIPELINE AND DIRECT BURIED CABLES SHALL BE ROUTED IN THE SAME TRENCH AS SHOWN IN DETAIL X, SHEET 17. CABLES BURIED IN TRENCH SHALL BE:
    a. TWO POWER CABLES
    b. TWO CONTROL CABLES
    c. TWO INSTRUMENTATION CABLES
    SEE NOTES 4 AND 5 FOR "ELECTRICAL SITE PLAN..." ON SHEET 31 FOR DETAILS OF DIRECT BURIAL CABLE INSTALLATION
22. TRANSITION FROM CONDUIT TO DIRECT BURIED CABLE PER NOTE 23.
23. a. CONDUITS SHALL SLOPE GRADUALLY FROM LEVEL OF DUCT BANK TO CORRECT DEPTH FOR RUNNING DIRECT BURIED ABOVE PIPE.
    b. PROVIDE CONDUIT SEALING BUSHING AT END OF EACH CONDUIT. SEAL CABLE AND ALL AROUND BUSHING EDGES WITH RTV SILICONE SEALANT.
24. 3/4", 3#14.
25. 3/4", 2#14.
26. HEAT TRACING CONTROL SWITCH, NEMA 4X, SQUARE-D TYPE SK OR EQUAL.
27. 2'-6" WIDE X 4'-0" LONG X 5'-6" DEEP PULL BOX.

PART	QUAN.	DESCRIPTION	MATERIAL

A ORIGINAL ISSUE

ENGINEERING-SCIENCE
Denver, Colorado

U.S. DEPARTMENT OF ENERGY
ROCKY FLATS AREA OFFICE
GOLDEN, COLORADO

Rockwell International
ROCKY FLATS PLANT
GOLDEN, COLORADO 80401

881 Hillside Remedial Action
BUILDING 830 AND STORAGE TANKS
ELECTRICAL PLANS

SIZE D | DRAWING NUMBER 38548-704 | ISSUE A | SHEET 34 of 35

CONDUIT AND WIRE SCHEDULE

CONDUIT NO.	CONDUIT SIZE	WIRE POWER	WIRE GROUND	WIRE CONTROL	WIRE INSTR	WIRE	SPARES	FROM	TO	REMARKS
101	1 1/4"	3#6	1#10					MOTOR CONTROL CENTER MCC 1	TANK T-201 IMMERSION HEATER	
102	1 1/4"	3#6	1#10					MOTOR CONTROL CENTER MCC 1	TANK T-202 IMMERSION HEATER	
103	1 1/4"	3#6	1#10					MOTOR CONTROL CENTER MCC 1	TANK T-203 IMMERSION HEATER	
104	1 1/4"	3#6	1#10					MOTOR CONTROL CENTER MCC 1	TANK T-204 IMMERSION HEATER	
105	3/4"	3#12	1#12					MOTOR CONTROL CENTER MCC 1	UH-1 OFFICE/UTILITY RM. HEATER	
106	2"	3#1	1#6					MOTOR CONTROL CENTER MCC 1	UCP-1 TREATMENT PLANT UCP	
107	3/4"	3#12	1#12					MOTOR CONTROL CENTER MCC 1	P-301 INFLUENT TRANSFER PUMP	
108	3/4"	3#12	1#12					MOTOR CONTROL CENTER MCC 1	P-302 INFLUENT TRANSFER PUMP	
109A	1 1/2"	3#6	1#10					MOTOR CONTROL CENTER MCC 1	TRANSFORMER TP	
109B	2"	4#1	1#6					TRANSFORMER TP	PANEL P	
109C	1 1/2"	4#6	1#10					PANEL P	PANEL LP	
110	1 1/2"	(8)						MOTOR CONTROL CENTER MCC 1	SUMP NO. 1 AND WELL 1-88	
111	1 1/2"	(8)						MOTOR CONTROL CENTER MCC 1	SUMP NO. 2 AND BLDG. 881 SUMP	
112	1 1/2" C.O.							MOTOR CONTROL CENTER MCC 1	PULL BOX OUTSIDE BUILDING	
113	1 1/2" C.O.							MOTOR CONTROL CENTER MCC 1	PULL BOX OUTSIDE BUILDING	
114										
115	3/4"	3#12	1#12					UCP-1 TREATMENT MODULE UCP	UCP-2 H_2O_2 MODULE UCP	UCP-2 POWER FEED (3)
C101	2"			12#14	8#14		10#14	MAIN CONTROL PANEL MCP	MOTOR CONTROL CENTER MCC 1	
C102	1 1/2"			16#14			8#14	MAIN CONTROL PANEL MCP	UCP-1 TREATMENT MODULE UCP	(3)
C103	1" C.O.							MOTOR CONTROL CENTER MCC 1	UCP-1 TREATMENT MODULE UCP	(3)
C104	1" C.O.							MAIN CONTROL PANEL MCP	UCP-2 H_2O_2 MODULE UCP	(3)
C105	1" C.O.							UCP-1 TREATMENT MODULE UCP	UCP-2 H_2O_2 MODULE UCP	(3)
C106	1 1/2"				16#14			MAIN CONTROL PANEL MCP	TANK T-201, T-202	VALVE LIMIT SWITCHES
C107	1 1/2"				24#14			MAIN CONTROL PANEL MCP	TANK T-203, T-204	VALVE LIMIT SWITCHES
C108	1 1/2"				(4)			MAIN CONTROL PANEL MCP	STORAGE TANKS	
C109	1" C.O.							MAIN CONTROL PANEL MCP	PULL BOX OUTSIDE BUILDING	
C110	3/4"			2#14				MAIN CONTROL PANEL MCP	FP-300 SUMP PUMPS CONTROL PNL	
C111	2 1/2"				(9)			MAIN CONTROL PANEL MCP	SUMP NO. 1 AND WELL 1-88	
C112	2 1/2"				(9)			MAIN CONTROL PANEL MCP	SUMP NO. 2 AND BLDG. 881 SUMP	
P101	3/4"	3#12	1#12					PANEL P CKTS 7, 9	PULL BOX OUTSIDE BUILDING	STORAGE TANKS - LTS & RECEP (7)
P102	1" C.O.							PANEL P	PULL BOX OUTSIDE BUILDING	
P103	1 1/2"	8#10	1#10					PANEL P CKTS 29, 31, 33, 32, 34, 36	HEAT TRACING CKTS JUNCT. BOX	
903	3"	3#4/0	1#2					SWITCHGEAR 881-2	MOTOR CONTROL CENTER MCC 1	BLDG. 830 MCC (5)(6)
904	3"	3#4/0	1#2					SWITCHGEAR 881-2	MOTOR CONTROL CENTER MCC 1	BLDG. 830 MCC (5)(6)

FEEDER (C98) — PANEL P — VOLTS 120/208 VOLTS, 3 PHASE, 4 WIRE
MAIN - 100 AMP, 3 POLE CIRCUIT BREAKER — LOCATION - BUILDING 830 — MTG. - SURFACE — BUS. -225 AMPS.

LOCATION	WATTS A	WATTS B	WATTS C	LTG	REC	MES	CIR	BKR	BKR	CIR	MES	REC	LTG	WATTS A	WATTS B	WATTS C	LOCATION
OFFICE EXHAUST FAN	155						1	15-1	20-1	2		3		540			OFFICE RECEPTS
MAIN CONTROL PANEL		500					3	20-1	20-1	4		3			540		OFFICE RECEPTS
OFFICE WATER HEATER			3000				5	40-1	20-1	6	1		2			500	OFFICE LTS & EXIT
TANK AREA LIGHTS	800				4		7	20-1	30-1	8	1			2200			TREATMENT AREA SUMP
TANK AREA RECEPT		1500				1	9	20-1	15-1	10	1				100		HEAT TRACING CONTROL CKT
SPARE							11	20-1	20-1	12							SPARE
—	2500					1	13	50	20-1	14							SPARE
PANEL LP		7500					15		20-1	16							SPARE
—			2500				17	3	20-1	18							SPARE
SPACE							19			20							SPACE
SPACE							21			22							SPACE
SPACE							23			24							SPACE
SPACE							25			26							SPACE
SPACE							27			28							SPACE
SPACE							29			30							SPACE
(2) * HEAT TRACING CKT NO. 1	600					1	31	20-1	20-1	32	1			600			HEAT TRACING CKT NO. 4 * (1)
(1) * HEAT TRACING CKT NO. 2		600				1	33	20-1 (2)	20-1	34	1				600		HEAT TRACING CKT NO. 5 * (1)
(1) * HEAT TRACING CKT NO. 3			600			1	35	20-1	20-1	36	1					600	HEAT TRACING CKT NO. 6 * (1)
SPACE							37			38							SPACE
SPACE							39			40							SPACE
SPACE							41			42							SPACE
SUB-TOTAL	4055	5100	6100											3340	1240	1100	
TOTAL	= 20,935 WATTS																
* (2) (1.25 X 8055)	= 2,014 WATTS																
SPARE	= 5,000 WATTS																
FEEDER LOAD	=27,944 WATTS =77.9 AMPS AT 208 VOLTS, 3 PHASE																

PART	QUAN.	DESCRIPTION	MATERIAL

NOTES:

1. PROVIDE MOLDED CASE BREAKERS ACCEPTABLE AND CORRECT FOR PROTECTING HEAT TRACING CABLE PER CHEMELEX REQUIREMENTS.
2. a. SPLIT PANEL P BUS. CONNECT BUS TO LINE SIDE OF 60 AMP CONTACTOR. CONNECT LOAD SIDE OF CONTACTOR TO BUS TO FEED CIRCUITS 31 TO 42. CONTACTOR SHALL BE MOUNTED INSIDE PANEL P.
   b. SEE DRAWING 38548-702 FOR CONTACTOR CONTROL CIRCUIT (CONTROL WIRING DIAGRAM TYPE 3)
3. SEE NOTE 1 DRAWING 38548-703.
4. 8 TWISTED PAIR #16 SHIELDED.
5. CONDUCTORS SHALL BE PARALLELED.
6. PORTIONS OF CONDUIT RUN(S) ARE EXISTING. SEE POWER FEEDER PLAN ON DRAWING 38548-701.
7. SEE DRAWING 38548-704 FOR CONTINUATION OF CIRCUITS P-7 AND P-9 FROM PULL BOX.
8. ONE (1) DIRECT BURIAL TYPE POWER CABLE. 4 CONDUCTOR NO. 10.
9. ONE (1) DIRECT BURIAL TYPE CONTROL CABLE. 12 CONDUCTOR NO. 10; AND ONE (1) DIRECT BURIAL TYPE TYPE INSTRUMENTATION CABLE. 4 PAIRS NO. 16.

REV	DESCRIPTION	BY	DATE
A	ORIGINAL ISSUE		1/78

DATE | REF | DOC | CLASS | JOB NO.

TOLERANCES: FRACTIONS, ANGLES, DECIMALS UNLESS NOTED OTHERWISE; REMOVE BURRS AND SHARP EDGES; NEXT ASSEMBLY

DESIGNED | DRAWN | CHECKED | APPROVED | SUBMITTED | APPROVED BY | APPROVED FOR

SCALE: NONE

U.S. DEPARTMENT OF ENERGY
ROCKY FLATS AREA OFFICE GOLDEN, COLORADO

Rockwell International
ROCKY FLATS PLANT
GOLDEN, COLORADO 80401

881 Hillside Remedial Action
CONDUIT AND WIRE SCHEDULE AND PANEL SCHEDULE

SIZE | DRAWING NUMBER | ISSUE | SHEET
D | 38548-705 | | 35 of 35

ENGINEERING-SCIENCE
Denver, Colorado