Current Conditions Document Review Cycle

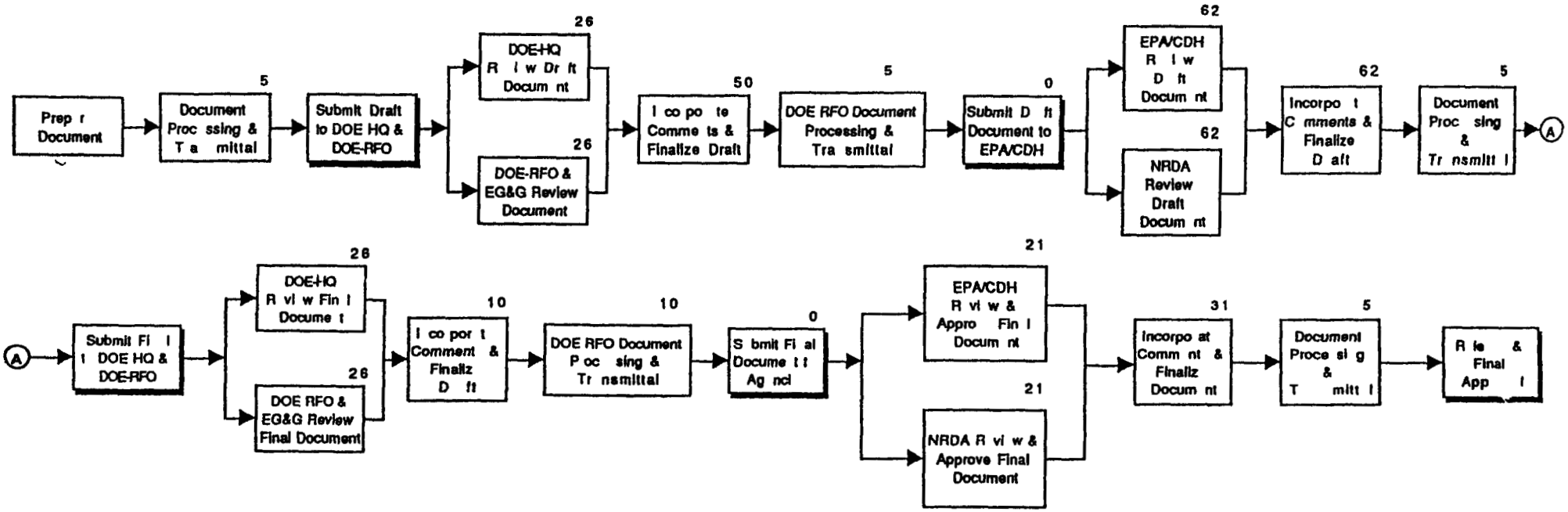

Generic Logic .53 PM

A-OU01-0005.7