ROCKY FLATS SITE
REGULATORY CONTACT RECORD

Purpose: Phase II and III Upgrades to Solar Ponds Plume Treatment System

---

Contact Record Approval Date: February 17, 2009

Site Contact(s) / Affiliation(s): Scott Surovchak / DOE; Linda Kaiser / Stoller; Rick DiSalvo / Stoller; John Boylan / Stoller

Regulatory Contact(s) / Affiliation(s): Carl Spreng / CDPHE

Discussion: As approved in Rocky Flats Legacy Management Agreement (RFLMA) Contact Record 2008-07, installation of a collection sump, solar powered pumping system and effluent piping upgrade to the Solar Ponds Plume Treatment System (SPPTS) was completed in October 2008. That upgrade is referred to as the SPPTS Phase I upgrade. Data collected subsequent to Phase I are intended to inform further SPPTS upgrades, and this Contact Record documents the plans for the Phase II and Phase III upgrades. The data collection associated with these phases is intended to inform evaluation of alternatives for final system upgrades, referred to as Phase IV.

The Phase I upgrade has been successful in capturing additional contaminated groundwater for treatment. The system influent flow increased by about a factor of 2 (in late October through December, 2008), to approximately 0.8 gallons per minute. Analytical data from samples collected after completion of the Phase I upgrade show that the SPPTS Discharge Gallery (DG) and the SPPTS treated effluent now have very similar concentrations, indicating that the new effluent discharge line installed as part of the Phase I upgrades is successfully limiting the commingling of contaminated groundwater with SPPTS treated effluent. These data also show a reduction in nitrate and uranium concentrations at the DG since the completion of Phase I. Analytical results to date for nitrate contamination at various SPPTS sampling points are shown in Figures 1 and 2. These figures incorporate analytical data reported by contract laboratories, as well as by in-house analyses. The in-house analyses cost less and give quicker results than analyses performed by contract laboratories, but are not suitable for compliance reporting. As indicated, following completion of the Phase I upgrades, the concentration of nitrate in untreated influent increased by about a factor of 2 to 3, to approximately 650 milligrams per liter (mg/L) nitrate (as nitrogen [N]). These figures show that the effluent concentrations of nitrate have increased as well. (To a lesser extent, this is also true for uranium: influent concentrations of uranium increased by about one-half, to about 55 micrograms per liter [ug/L], while effluent concentrations have increased to about 15 ug/L.) (Note that the new RFLMA SPPTS effluent monitoring point, SPOUT, is located in the equipment vault near the collection sump installed during the Phase I upgrade, and replaces former effluent monitoring location SPPMM01 as approved in Contact Record 2008-08. Location ITSS represents water collected in the Phase I collection sump; other locations are defined in the RFLMA.)

The current nitrate standard for North Walnut Creek is 100 mg/L as N, based on the surface water standard temporary modification (TM) for this portion of Segment 5 of Big Dry Creek. The TM is set to expire on December 31, 2009, after which the underlying water supply standard of 10 mg/L nitrate as N will apply. (See RFLMA Attachment 2, Table 1.) RFLMA Attachment 2, Figure 11,

"Groundwater Treatment Systems", provides the criteria for evaluating routine analytical results for the treatment system sampling locations specified in RFLMA Attachment 2, Table 2. For the SPPTS, nitrite/nitrate (as N) and uranium are monitored under RFLMA. The evaluation is applicable to the influent (SPIN), effluent (SPOUT), and performance (GS13) locations. If routine RFLMA compliance sampling produces results that cause the 85th percentile of data to exceed the corresponding value specified in RFLMA Attachment 2, Table 1, then the RFLMA consultative process is initiated to determine if actions should be implemented. While the data currently being collected from post-Phase I monitoring are more extensive than the RFLMA required routine monitoring, and although the data include in-house analyses that are not used for determining compliance with the RFLMA, it is clear from Figures 1 and 2 that contaminant concentrations at the influent, effluent, and surface water performance location have increased. If these conditions were to continue, the 85th percentile concentrations of nitrate and uranium in the effluent and at the surface water performance location would eventually exceed the corresponding Table 1 values. The goal of the proposed Phases II, III, and IV is to optimize treatment so that the underlying water supply standard of 10 mg/L can be met.

Construction of Phase II and III is scheduled to begin in the spring of 2009. The RFLMA consultative process has been initiated to describe the corresponding plans and to determine whether and to what extent actions should be implemented. The U.S. Department of Energy (DOE) and the Colorado Department of Public Health and Environment (CDPHE) consulted on January 15, 2009 to review DOE's conceptual plans for Phases II and III of the SPPTS upgrades.

The Phase II objective is to install a new uranium treatment cell upstream of the two existing treatment cells. Currently, the second of the two existing treatment cells (Cell 2; downstream of Cell 1) is designed to remove uranium (predominantly through precipitation reactions occurring within the zero valent iron [ZVI] media), though some ZVI is also mixed in the nitrate-treating media of Cell 1. Routing untreated water through the ZVI for uranium removal prior to the nitrate treatment media is anticipated to allow future disposal of the nitrate media as non-radioactive waste. The new ZVI cell location and design will also allow for easier periodic replacement of the ZVI media without impacting the nitrate treatment media. The actual uranium treatment method using ZVI will remain unchanged.

The Phase III objective is to install pilot-scale nitrate treatment cells to evaluate improved nitrate bio-treatment technologies. In this case, Phase III will evaluate an inert substrate with the metered addition of nutrients, and a mixture of organic material combined with vegetable oil; both media types should provide enhanced biological denitrification. Again, the actual treatment method using biological denitrification will remain unchanged.

Pursuant to RFLMA paragraph 34, DOE may implement field modifications that are consistent with the intent of the approved response action, after receiving oral approval from CDPHE, and documented in a Contact Record. Upon approval, DOE may implement the SPPTS modifications as documented in this Contact Record. In addition, pursuant to RFLMA paragraph 66, DOE and CDPHE do not consider addition of the Phase II uranium treatment cell, the Phase III pilot-scale nitrate treatment cells, or a subsequent Phase IV upgrade based on the proposed Phase III pilot-scale tests, separately or collectively, to constitute a significant change from RFLMA's existing requirements. This is because the actual treatment methods used are not changed via the installation of Phases II or III (or, by extension, Phase IV). This Contact Record shall be used to provide public notice of these modifications to the SPPTS.

DOE has prepared an evaluation of the proposed nitrate treatment approach, *SPPTS Phase III: Pilot-Scale Optimization of Nitrate Treatment,* which is included as Attachment 1 to this Contact Record.

CDPHE has reviewed the DOE evaluation and has determined that it provides sufficient information to justify the installation of the Phase III pilot scale cells. Also, CDPHE agrees with DOE that the Phase II ZVI cell installation upgrade is likely to make future uranium treatment media replacement easier while improving performance and simplifying disposal of the nitrate media.

Over the longer term, the proposed SPPTS Phases II, III, and IV will address the effluent contaminant concentrations currently observed, but for the short term rejuvenation of the existing media may warrant consideration. While replacement and/or rejuvenation of the current SPPTS media would be expected to reduce the effluent nitrate concentrations, current information suggests such actions would not reliably reduce concentrations to target levels, given the higher contaminant loads resulting from the Phase 1 upgrades. Furthermore, current information suggests the SPPTS effluent nitrate concentrations may continue to negatively impact water quality in portions of North Walnut Creek downstream of the SPPTS (as reflected at performance monitoring point GS13) despite replacement/rejuvenation of the existing media. Even if the existing 10-year old nitrate media was fresh, the volume of media is insufficient to provide adequate treatment given current contaminant loads. Therefore, media replacement is not seen as a reasonable response, over either the short term or long term, to these conditions. Instead, the system upgrades are most appropriate for the long term, but media rejuvenation remains worthy of consideration for the short term.

CDPHE also agrees that prior to deciding whether and when the existing SPPTS media should be rejuvenated, DOE may perform tracer tests to determine if media "short-circuiting" or water channeling is contributing to apparent reduced nitrate removal. The tracer to be used, currently anticipated to be sodium bromide, and the field procedure for conducting the tracer test will be submitted to CDPHE prior to conducting the test. The tracer test shall be conducted to comply with the remedy Applicable or Relevant and Appropriate Requirements (ARARs) for groundwater and surface water for the tracer chemical (note that there is no Colorado surface water or groundwater standards promulgated for sodium bromide). The test will be designed to limit the amount of tracer substance used, to achieve ARARs for surface water and groundwater. An appropriate sampling frequency and analyte suite for comparison to ARARs will be described in the tracer test plan.

If the tracer test indicates satisfactory flow (i.e., minimal channeling), rejuvenation of the existing nitrate media, which is predominantly sawdust with a small amount of ZVI mixed in, will be proposed. The rejuvenation method currently envisioned involves injecting emulsified vegetable oil into the media, thereby adding a readily-available carbon source to the relatively depleted carbon of the sawdust, providing additional nutrients to the bacteria currently present and stimulating bacterial denitrification. If channeling is indicated, media rejuvenation would have limited or negligible effect and rejuvenation will likely not be attempted.

The Phase II upgrade includes the addition of a commonly used water softener chemical, currently expected to be sodium citrate, to reduce iron scale buildup in the downstream system components, including the pilot-scale nitrate treatment cells. The Phase III upgrade includes the addition of a food-grade nutrient carbon source to the influent water. The treatment will be designed to control the amount of additive used. The use of these additives will be conducted to meet the remedy ARARs for groundwater and surface water.

While the proposed Phase II and III upgrades do not involve any construction within habitat of the threatened Prebles Meadow Jumping Mouse, DOE will also inform the US Fish and Wildlife Service (USFWS) regarding the proposed use of the tracer chemical and treatment additives. Small concentrations of these substances may be expected in the SPPTS effluent and in the downstream

surface water that is within mouse habitat. This notification will facilitate an evaluation, if needed, of any potential impacts to the mouse or its habitat for these compounds to determine whether a biological assessment (BA) is needed for the project. The USFWS must approve the BA.

The conceptual design for Phases II and III is included in Figure 3. The construction involves excavation prohibited by the institutional controls (ICs) incorporated in RFLMA. The excavation work will exceed the 3-foot-depth limit specified by ICs (RFLMA, Attachment 2, Table 4, Control 2 [IC 2]) and thus requires pre-approved procedures. Specifically, this work will entail excavation to maximum excavation depths of approximately 10 feet below ground surface (10 ft. bgs) for most of the construction, with new pipe connections made at the influent to existing Cell 1 at a depth of approximately 15 ft. bgs.

The objective of IC 2 regarding excavations with a depth that exceeds 3 feet is to maintain the current depth to subsurface contamination or contaminated structures. This IC also results in achieving compliance with the CDPHE risk management policy of ensuring that residual risks to the site user are at or below 1×10^{-6}. As discussed below, the proposed work achieves the risk management policy goal.

Excavation will be reduced to the extent feasible. This will reduce both the size of the disturbed area and the volume of materials and supplies consumed for the project. The best management practices in the *Erosion Control Plan for Rocky Flats Property Central Operable Unit, DOE-LM/1497-2007,* July 2007 will also be implemented to provide erosion controls for the excavated materials so that run-on and runoff will be minimized.

CDPHE has requested that the following information be included in contact records that include soil excavation:

1 - Provide information about any remaining subsurface structures in the vicinity so that the minimum cover assumption won't be violated (or state that there are none if that is the case)-

There are no remaining subsurface structures in the vicinity, so cover assumptions will not be violated.

2 - Provide information about any former Individual hazardous Substance Sites/Potential Areas of Concern (IHSSs/PACs) or other known soil or groundwater contamination in the vicinity (or state that there is no known contamination)-

This construction area was not an IHSS. The *RI/FS Nature and Extent of Soil Contamination* figures do not indicate soil contamination in this area. Groundwater in the vicinity is impacted by the Solar Ponds Plume. Any groundwater that is encountered will be collected from the excavation, if necessary, to conduct the construction work. If excessive amounts of groundwater are intercepted in the excavation, the water will either be pumped from the excavation to the surface generally southwest (upgradient) of the SPPTS to allow this water to seep back into the ground, as approved in Contact Record 2008-06, or will be containerized and transported to the SPPTS for treatment, at the discretion of the field crew.

3 - Resurvey any new surface established in subsurface soil, unless sufficient existing data is available to characterize the surface (or state that the excavated soil will be replaced and the original contours restored)

Portions of the Phase II ZVI cell, the Phase III pilot scale cells, and equipment vaults will be above the ground surface. A solar power system for powering pumps, instrumentation, and controls will also be above ground. Otherwise, the final ground contours will approximate the pre-excavation contours. Excess soils generated from the excavation will be used generally for revegetation in the construction area and on-site as available. An as-built survey will be performed after construction is completed.

Closeout of Contact Record: This contact record will be closed when the as-built survey is completed and when post-construction revegetation and erosion controls are in place.

Resolution: The installation of the SPPTS Phase II and Phase III upgrades will be conducted as described in this Contact Record. The tracer test plan will also be provided to CDPHE.

Contact Record Prepared by: John Boylan and Rick DiSalvo

Distribution:
Carl Spreng, CDPHE
Scott Surovchak, DOE
Linda Kaiser, Stoller
Rocky Flats Contact Record
File

RFLMA CR 2009-01 Figure 1

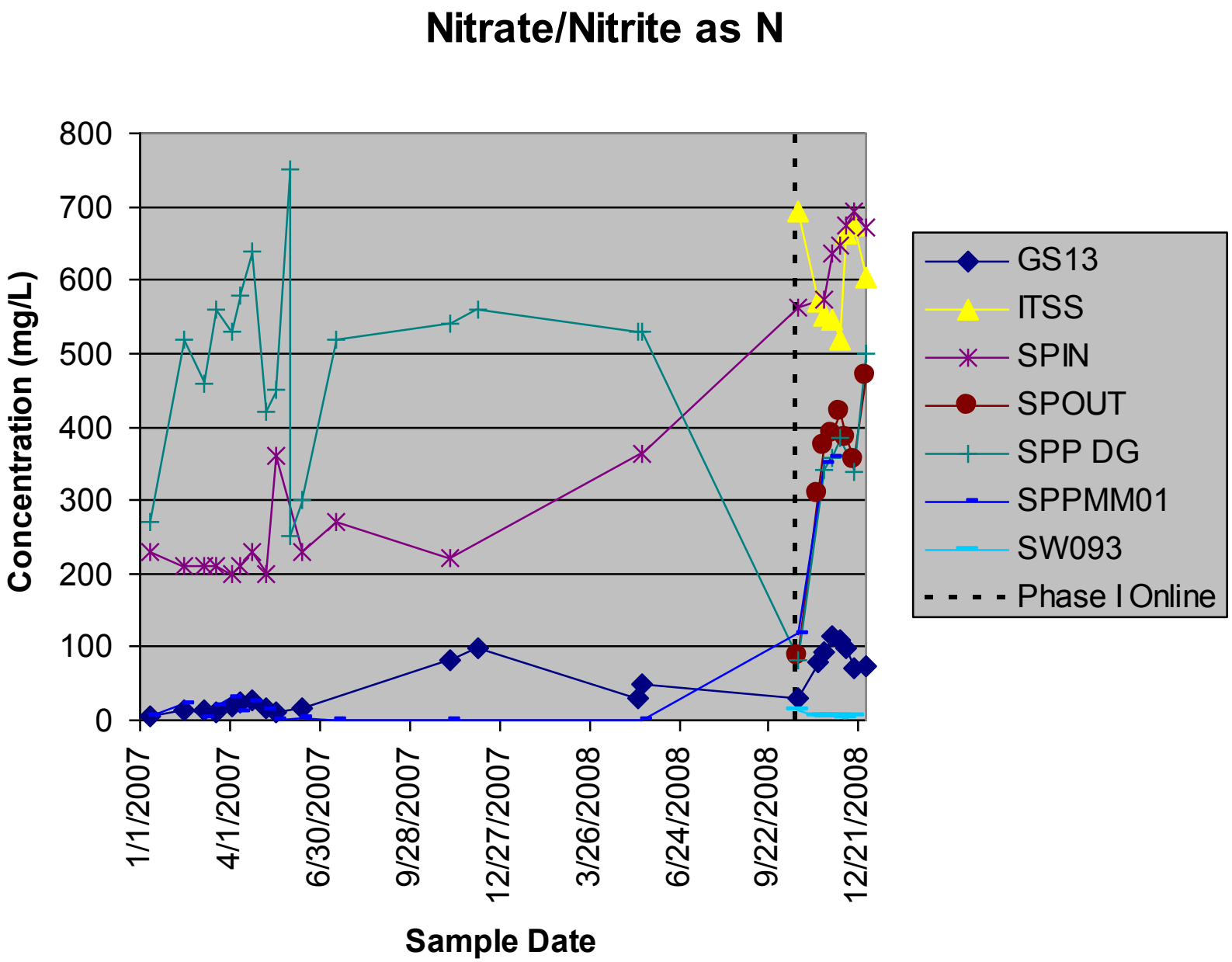

RFLMA CR 2009-01 Figure 2

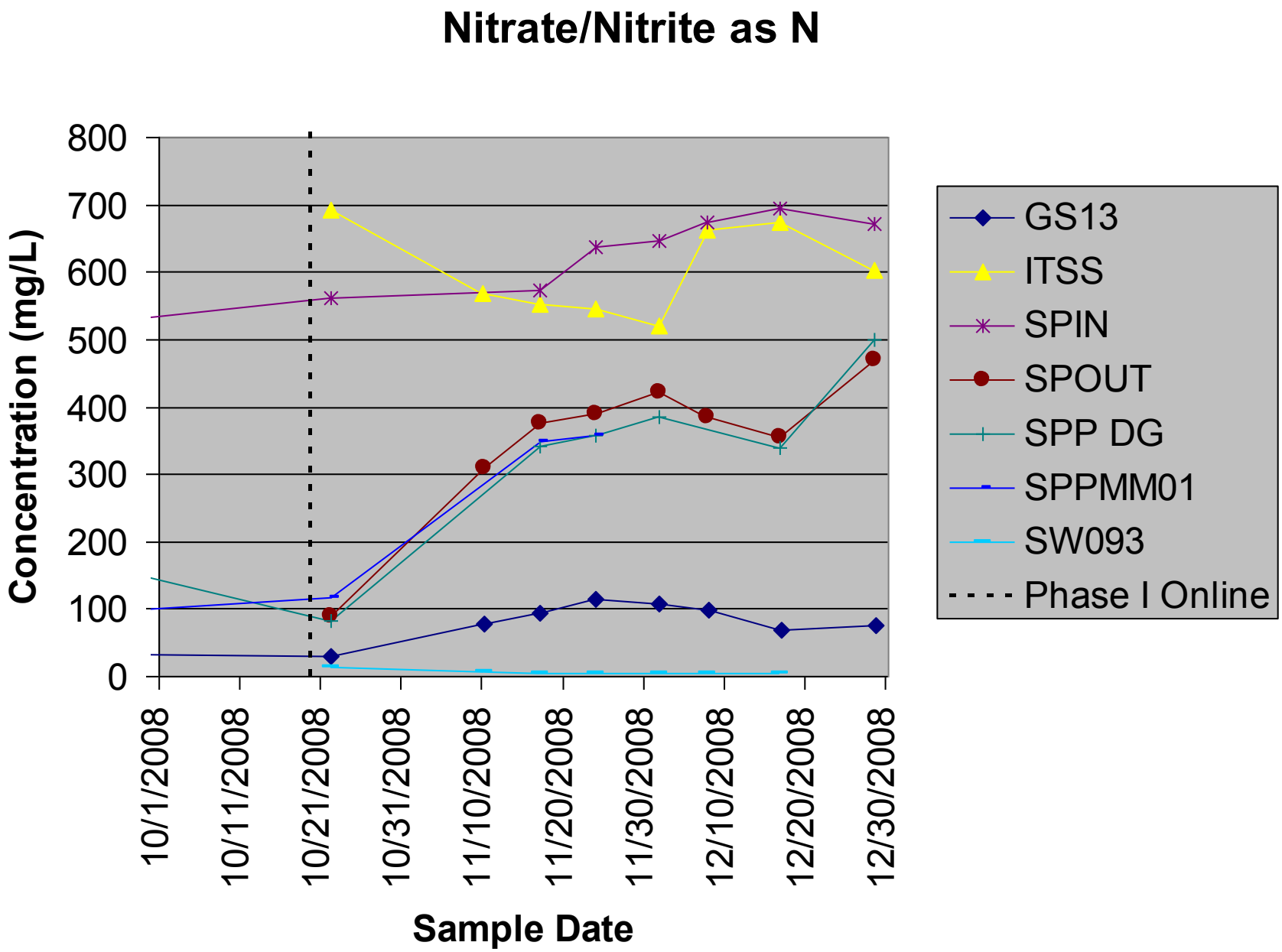

RFLMA CR 2009-01 Figure 3: Section of plan-view schematic drawing (at 30% design) showing proposed components of Phases II and III to left of existing treatment cells.

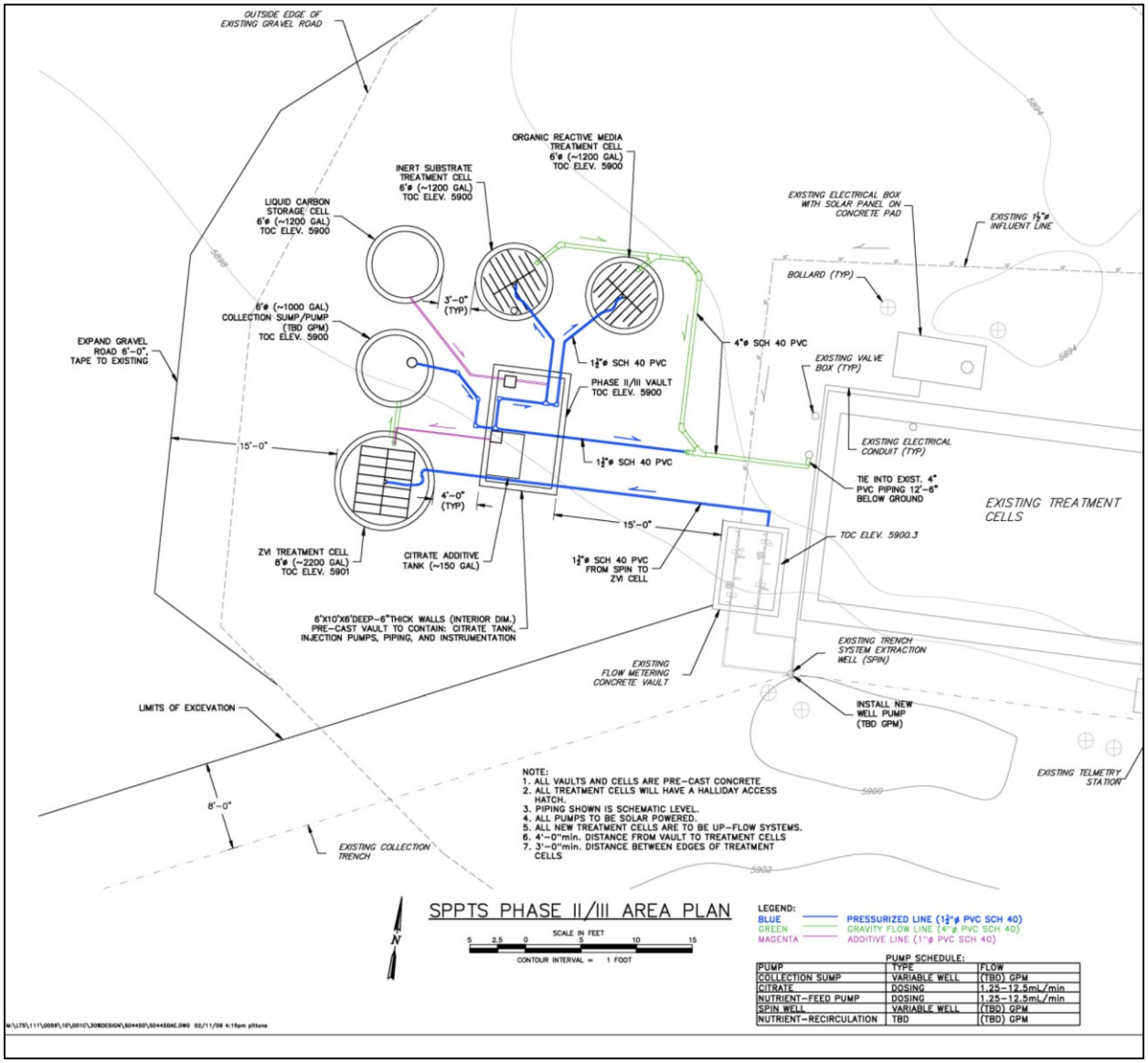

SPPTS Phase III: Pilot-Scale Optimization of Nitrate Treatment

Executive Summary

The SPPTS treats groundwater contaminated with nitrate and uranium. Improvements made to the system in late 2008 (Phase I system upgrades) have increased the flow and contaminant concentrations. This has reduced the residence time within the media, compromising its ability to remove the contaminants, and as a result the system has not met effluent target concentrations.

Although the flow rates observed at the SPPTS since the Phase I upgrades were completed are relatively low, averaging just under 1 gpm, the nitrate concentrations are quite high, averaging approximately 600 mg/L nitrate as N. Concentrations such as these are not typically treated using a passive system, but instead rely on active, powered systems employing technologies such as fluidized beds or ion-exchange resins. Such a configuration is not feasible at the Rocky Flats Site.

Three media types are considered for pilot-scale testing (Phase III), which will inform a full-scale system upgrade (Phase IV):

- Inert media with added carbon
- Reactive media
- Enhanced reactive media

Various specific media materials and carbon sources are considered, with the final recommendation being to test:

- Inert plastic media with brewery waste as a carbon source
- Walnut shells enhanced with vegetable oil

Testing is proposed to be conducted using two 1000-gallon tanks operated in parallel so that the performance of the two media types can be compared. This facility would then be available for the Phase IV system, if desired.

In addition, tracer testing in the current SPPTS treatment cells is recommended to determine if preferential pathways have developed within the media. If not, it is recommended that the existing sawdust/ZVI media be tested to determine whether it can be successfully rejuvenated, e.g., via injection of emulsified vegetable oil, in order to improve short-term performance of the system. Rejuvenation of the uranium treatment cell is not recommended, as this cell will be replaced in the near future (Phase II).

1. Introduction

The Solar Ponds Plume Treatment System (SPPTS) at the Rocky Flats Site was installed in 1999 to treat elevated concentrations of nitrate and uranium in groundwater. The treatment system includes one cell containing sawdust and zero-valent iron (ZVI) designed to treat nitrate, and a second cell containing gravel and ZVI designed to treat uranium. (See the Solar Ponds Plume Decision Document [DOE 1999] for additional information.)

2. Background on SPPTS Phased Upgrades

As stated, nitrate treatment at the SPPTS is currently performed by media that is a mixture of sawdust and ZVI. This media is housed in a cell that is 17 feet (ft) wide by 31.5 ft long. The media layer is 9 ft thick. The configuration of the uranium treatment media, ZVI in gravel, is similar except that the cell is 10.5 ft long instead of 31.5 ft long. In both cells, the top surface of the media layer is buried under approximately 15 ft of wood chips and soil. Activities involving maintenance, inspection, or replacement of both types of the media entail significant cost and effort that could be avoided if the media was more easily accessed.

The Solar Ponds Plume Decision Document (p.48) states that "it is expected that the organic treatment media will provide a carbon source in excess of what would be needed for nitrate reduction and therefore would not require replacement." However, effluent water quality data during periods of higher flow (such as following the blizzards of winter 2006–2007) have indicated media replacement or rejuvenation might be necessary.

In October 2008, a sump to collect more contaminated groundwater for treatment was installed as part of the SPPTS Phase I upgrades. Following the installation of this sump and the subsequent increase in flow (roughly doubling, to approximately 0.8 gallons per minute [gpm]) and contaminant concentrations (roughly doubling or tripling, to approximately 650 milligrams per liter [mg/L] nitrate as nitrogen [N]) to the media, effluent concentrations of nitrate and uranium have also increased, indicating that media replacement and/or rejuvenation may be necessary to reduce effluent concentrations. (Note: Hereafter, this report will refer to concentrations of nitrate using the term "nitrate" rather than the full description, "nitrate as N.") Concentrations such as these are much higher than those typically treated via passive methods, being more representative of waste streams treated by active systems with supplied electrical power, staff, and resin-based media. However, Site limitations eliminate these options.

The cost and difficulty required to maintain the SPPTS treatment cells has led to the development of the Phase II, III, and IV upgrades to the system. Phase II entails installing a separate uranium treatment cell to remove uranium before the water is routed through the second cell for nitrate treatment, thereby allowing the nitrate treatment media to be considered non-radiological. Phase III, the focus of this report, involves evaluating, at a pilot scale, alternative nitrate treatment media in order to improve treatment effectiveness and address the high cost and level of difficulty presented by the current design, with its hard-to-access media composed of a relatively poor-quality carbon source. Performance data from the Phase III effort will be collected over the full range of seasons and what are expected to be a fairly broad range of flow regimes to confirm the suitability and performance of this media and, combined with the

additional flow data collected since Phase I was completed, to determine design specifications for a full-scale version of the nitrate treatment cell. Constructing the full-scale nitrate treatment system will be the objective of Phase IV.

3. Purpose of Phase III Pilot-Scale Testing

As noted previously, the existing sawdust/ZVI media is costly and difficult to maintain. In addition, since the Phase I upgrades went online, the media is not performing adequately. Influent flows have doubled and nitrate concentrations have simultaneously doubled to tripled, apparently compromising the ability of the existing media to provide the necessary level of treatment and causing effluent concentrations of nitrate to exceed the target. A suitable (i.e., effective, less costly, and more easily managed) media needs to be identified and tested during Phase III before implementation in a full-scale system (Phase IV). Bench-scale testing has proven useful, but difficulties in scaling (including flow short-circuiting that is common in smaller test vessels) dictate that larger-scale testing be performed.

While the focus of this document is to define the appropriate media for the Phase III pilot-scale testing for nitrate removal, a shorter-term action should be undertaken in the near future to address the higher nitrate concentrations currently being observed in SPPTS effluent. The most cost-efficient and effective method to reduce effluent nitrate concentrations over the short term may be to "rejuvenate" the existing media through the addition of a biologically accessible carbon source. This approach is described in Attachment A.

The basic types of media that may be used to treat nitrate, the various specific media materials that were considered for this application, and the logic used to eventually select the recommended media material are outlined in the following sections. Final recommendations—both long-term and short-term—are provided at the end of the document, and attachments are included that present additional data and information supporting the recommendations.

4. Current Conditions

In October 2008, Phase I of the planned upgrades to the SPPTS was completed. Groundwater now collects in the Interceptor Trench System (ITS) collection sump (referred to as the ITSS) and is pumped to the SPPTS for treatment. This additional ITSS water results in higher flows, as well as higher concentrations of nitrate (and uranium, the secondary contaminant), being directed through the treatment cells. As a result, the hydraulic retention time (HRT) has decreased while the nitrogen (and uranium) loading has increased. Table 1 shows how variation in flow rate and nitrate concentration can affect both nitrate loading and calculated HRT. The concentrations in this example are representative of observed SPPTS influent concentration ranges. Although post-Phase I flow rates have roughly doubled to approximately 1 gpm, data do not yet exist for anticipated seasonal wet periods. However, for the purpose of discussion, the elevated flow rate shown (3 gpm) may be more representative of what may be observed during the spring or as an annual average. Consequently, this flow is assumed as a conservative upper limit in subsequent conceptual design scenarios for Phase IV.

Table 1
Relationship Between Hypothetical Flow/Concentrations and HRTs in the SPPTS

Average Flow Rate (gpm)	Nitrate/Nitrite as Nitrogen (mg/L)	Nitrogen Loading (kg-N/d)	HRT (days)
0.5	300	0.8	22
3.0	600	9.8	3.6

gpm = gallons per minute
mg/L = milligrams per liter
kg-N/d = kilograms of nitrogen per day

Recently (e.g., winter 2006–2007), concentrations of nitrate and uranium in SPPTS effluent were observed to increase during periods of higher flows. Thus it was expected that with the addition of groundwater collected at the ITSS, performance of the SPPTS might decline. Preliminary data indicate that this is the case, as target concentrations of nitrate and uranium in system effluent are being exceeded (refer to Table A-1, Attachment A, for recent results). Whether this is primarily due to the treatment media being exhausted (i.e., Cell 1 containing an inadequate supply of bioavailable carbon, or the ZVI in Cell 2 no longer being accessible due to the formation of mineral precipitates) or bypassed via short-circuiting and preferential pathways is not known.

The following sections provide a summary of the media alternatives that were evaluated.

5. Media Considerations

For the short term, efforts should be considered to rejuvenate the existing sawdust/ZVI media in Cell 1 (i.e., the nitrate treatment cell) of the SPPTS to meet effluent concentration targets. However, it is unlikely that this approach will provide adequate, long-term treatment under the changed conditions (i.e., higher flows and higher nitrate concentrations) without some form of improvement.

For the longer term, rather than simply replace the existing 10-year-old media with fresh sawdust and ZVI, other media should be evaluated for treating nitrate in groundwater that has been pretreated for the removal of uranium (via the Phase II upgrade). There are two basic types of nitrate treatment media that are commercially available:

- An ***inert*** media that provides a large surface area upon which denitrifying biofilms form in the presence of water-soluble electron donors (liquid carbon sources such as various forms of sugar, vegetable oil emulsions, or alcohol).

- A ***reactive*** media that provides both the solid matrix for biofilm growth and a long-term source of denitrifying carbon, which a bacterial suite degrades over time. The current sawdust-based media is a type of reactive media.

An ideal reactive media should be relatively permeable, inexpensive, and readily available (preferably locally), and it should have a cellulosic rigid structure that can maintain its long-term physical strength while degrading. The primary consideration for an inert media is that it should have a large specific surface area and high porosity (i.e., void volume) to maximize biofilm formation and resist clogging.

While inert and reactive media appropriate for nitrate removal have been commercially available for many years, the SPPTS project may benefit from advances in the technology and understanding since the current system was designed. Additionally, given the higher contaminant concentrations and higher flows that have existed since the Phase I upgrades were completed, the existing system would probably not meet treatment objectives even if filled with fresh media.

With respect to clogging and biofilm development, it is important to note that the influent to the Phase III and, ultimately, Phase IV nitrate treatment cells will be the effluent from the Phase II uranium treatment cell. Because this latter cell will contain ZVI, relatively high concentrations of dissolved iron will be present in the Phase III/IV influent. This has the potential to contribute to clogging through the development of iron precipitates. A means by which this dissolved iron can be sequestered should therefore also be considered through the Phase III tests.

5.1 *Advantages and Disadvantages*

Each media type has unique advantages and disadvantages. Solid-substrate, reactive media is generally considered advantageous for water treatment under conditions where passive or semipassive treatment is preferable. These systems, however, are generally most appropriate under low-flow and low-loading conditions because longer HRTs and periodic media replacement are required. Denitrification systems treating high nitrate loads (high flows and/or high nitrate concentrations), such as most industrial systems, utilize inert support media supplemented with a very reactive liquid carbon source (most commonly methanol) and are process-engineered treatment systems that require more routine operational attention.

The concept of an inert substrate with a liquid carbon source added to support bacterial denitrification was explored via treatability studies performed at the Site by Colorado State University (CSU) in 2006 and 2007. Although those tests demonstrated that the concept was viable, the studies suffered from design flaws. For example, following the completion of the studies, it was found that the inoculum was not adequately distributed through the substrate for the short-duration tests that were performed, and significant preferential flow was present; in addition, the carbon sources used (ethanol in one set of tests, methanol in the second set) would have presented significant logistical challenges in any subsequent full-scale application at the Site. However, these experimental design flaws are not sufficient grounds for removing from further consideration all forms of nitrate treatment that incorporate an inert substrate and liquid carbon source. Instead, these lessons must be incorporated into any future system designs that employ this type of media.

5.2 *Practical Considerations*

A reactive media will generally contain a significant fraction of a polymeric organic compound (a cellulosic material) that provides the necessary physical structure to support microbial biofilm

development and resist media compaction and reactor plugging. Biologic utilization of the media is a two-step process as described by Reactions 1 and 2 in Table 2. Because Reaction 1 is rate-limiting, the HRT for systems using a solid reactive media needs to be significantly greater than for systems employing an inert media with a readily degradable liquid carbon source, which rely only on Reaction 2. Consequently, the volume of reactive media required to treat a given volume of nitrate-containing water will generally be much greater than the volume of inert media to treat the same volume at the same nitrate concentration. In addition, the reactivity of a reactive media (i.e., the amount of carbon that is bioavailable) will decrease with time, as will its structural integrity, and thus all reactive media will need to be replaced periodically.

Table 2
Chemical Reactions Applying to Nitrate Treatment and Media Selection

Reaction	Relative Rate	No.
Heterotrophic Denitrification		
Organic polymer (e.g., cellulose) $\rightarrow$ Organic monomers (e.g., glucose)	Very slow	1
$5CH_2O + 4NO_3^- \rightarrow 2N_{2(g)} + 5HCO_3^- + H^+ + 2H_2O$	Fast	2
Nitrate Reduction with ZVI		
$NO_3^- + 4Fe^0 + 10H^+ \rightarrow NH_4^+ + 4Fe^{2+} + 3H_2O$	Medium	3
$2NO_3^- + 5Fe^0 + 12\ H^+ \rightarrow N_{2(g)} + 5Fe^{2+} + 6H_2O$	Medium	4
ZVI-Supported Autotrophic Denitrification		
$Fe^0 + 2H_2O \rightarrow Fe^{2+} + H_2 + 2OH^-$	Fast	5
$2NO_3^- + 5H_2 + 2H^+ \rightarrow N_{2(g)} + 6H_2O$	Fast	6
Iron Oxidation - Denitrification		
$NO_3^- + 5Fe^{2+} + 6H^+ \rightarrow ½N_{2(g)} + 5Fe^{3+} + 3H_2O$	No data	7
Anaerobic Ammonium Oxidation (a.k.a. Anammox)		
$3NO_3^- + 5NH_4^+ \rightarrow 4N_2 + 9H_2O + 2H^+$	Fast	8

While these media replacement activities may be infrequent and depend on the media selected, they may require significant construction effort; drying, management, and storage or disposal of the spent media; and potentially temporary treatment or storage of influent groundwater during the replacement activity. The reactive media used must be available in quantity and over the long term so that equivalent media can be obtained when replacement is necessary. If the same media is not available in the future and an alternative media must be used, it would need to be bench- and/or pilot-tested (at additional time and expense) to verify that it would provide adequate treatment characteristics.

In contrast, an inert media can theoretically last indefinitely (because it is not being consumed) and generally will require less volume, depending on its specific surface area and the source of carbon provided. Consequently, while the initial cost for inert media may be greater, over the longer term it can become cost-effective. However, there are ongoing costs associated with this approach given that the liquid carbon source is continuously fed into the system.

The current media in the SPPTS is a combination of a reactive solid organic media (sawdust) and a reactive inorganic material (ZVI). This combination has the potential to support numerous reactions that enhance its reactivity as shown in Reactions 1 through 8 in Table 2. Column studies performed by the University of Waterloo (1999) to support the design of the SPPTS showed that sawdust alone was not very effective at removing nitrate, but treatment was improved through the addition of ZVI. The added ZVI, with the numerous reactions that it can support, is apparently responsible for a significant portion of the nitrate removal that has been observed in the SPPTS over the past years.

5.3 *Media Selection Criteria*

Many different alternative treatment media are available. The following selection criteria were developed to support the comparison of these alternatives for ultimate application at the SPPTS:

- Unit weight (the lighter, the better).
- Specific surface area (square feet [ft^2] per cubic foot [ft^3]).
- Compressibility (behavior with a bed depth of up to 20 ft).
- Reactiveness.
- Local availability in required quantity (e.g., if the existing structure is suitable and selected for the future nitrate treatment cell, as much as approximately 580 cubic yards [yd^3] will be required to fill the vault, which is 17 ft wide by 43 ft long by 20 ft deep), with the amount required depending on the microbiological efficiency—the amount of bioavailable carbon per unit volume—of the media.
- Permeability of the packed media.
- Cost.
- Longevity (under uniform flow/concentration conditions that are assumed for convenience, although it is recognized that these conditions will fluctuate seasonally and over the longer term).
- Effects of varying flow conditions on the media (e.g., the media should perform acceptably under the current pulsing flow operating condition [solar pumping], and should also not be adversely affected by periods of no flow, which was routine prior to the Phase I upgrades).
- Routine maintenance requirements (with a goal of minimal routine operator involvement).

- Disposal considerations (composting versus disposal as waste, and any associated requirements).
- Cost and ease of replacement (i.e., when removed and exchanged with fresh media, if applicable).

6. Media Evaluated

This section presents various media considered for the Phase III pilot-scale testing. Included are inert media, liquid carbon sources, and reactive media. Example suppliers and estimated costs are also provided.

6.1 *Media Selection Criteria*

Inert media provides a large surface area upon which denitrifying biofilms form in the presence of water-soluble electron donors (liquid carbon sources such as various forms of sugar, vegetable oil emulsions, and alcohol).

Table 3 lists the inert media evaluated for potential use in the Phase III pilot-scale testing.

Table 3
Inert Media Options[a]

Material	Potential Source	Specific Areas and Cost
Plastic random-packing media Tri-Pack®	Jaeger Environmental	85 ft^2/ft^3 ($0.26/$ft^2$)
Pea gravel[b]	Santa Fe Sand & Gravel	~100 ft^2/ft^3 ($0.01/$ft^2$) ($41/yd^3)
Scoria (lava rock)		ND[c]
Honeywell polyurethane foam blocks and plastic cylinders	Honeywell	220 ft^2/ft^3 ($0.09/$ft^2$) ($20/ft^3)
Styrofoam peanuts	Varies	ND
Shredded recycled plastic bottles	Waste Management Inc. recycling center	ND
Crushed glass	Waste Management Inc. recycling center	ND
Granular activated carbon	TIGG Corp. (PA) NORIT Americas, Inc. (TX)	~301 ft^2/ft^3 ($0.15/$ft^2$)
Hollow-fiber membranes	Applied Process Technology	ND

[a] Inert media that were retained for more detailed analysis are shaded.
[b] Surface area estimated assuming a sphere with a diameter of ⅜ inch.
[c] ND (not determined)—Specific costs were not determined because these were rejected; see below.

Several of the inert media alternatives were eliminated from further consideration as follows:

- Crushed glass was eliminated because it may be difficult to find in quantity and with a consistent grain size. It is also physically hazardous to work with.
- Scoria (lava rock) was rejected due to the limited local availability and lack of significant advantage over locally available lightweight aggregate.
- Styrofoam peanuts were eliminated based on cost compared to pea gravel, which provides approximately the same specific surface area and permeability.
- Shredded recycled plastic was rejected due to potential variability of product with uncertain wetability characteristics.
- Granular activated carbon was eliminated because while the cost per surface area is relatively low, the porosity of the media is also low and raises concerns about biofouling and long-term operation and maintenance requirements.
- Hollow-fiber membranes were rejected because they are typically used in concert with hydrogen gas, which diffuses through the membranes to support biofilm growth. As noted below, hydrogen was rejected due the gas's explosive potential; therefore, the membranes were also eliminated.

After the initial round of screening, the inert media that remained for further evaluation included the plastic random-packing media, pea gravel, and Honeywell polyurethane foam blocks and plastic cylinders.

6.2 *Carbon Sources*

A treatment system using inert support media will require the addition of an exogenous organic carbon to fuel the denitrification reactions. Various materials from process sugars to industrial waste products could provide the required carbon. An initial list of potential organic carbon sources that were considered and screened is provided in Table 4.

Table 4
Carbon Source Options[a]

Material	Potential Source	Relative Cost[b]
Liquid brewery wastes (waste beer, 2% to 3% ethanol)	MillerCoors Brewing Co.	Very low ($0.08/gal; cost per 1,000 gal unknown)[c]
Liquid brewery wastes (brewer condensed soluble [BCS], a sugary solution)	MillerCoors Brewing Co.	Very low ($0.05 to $.06/gal; cost per 1,000 gal unknown)[c]
Liquid brewery wastes (trub, a high-protein byproduct)	MillerCoors Brewing Co.	Very low ($0.05 to $.06/gal; cost per 1,000 gal unknown)[c]
Liquid brewery wastes (15% ethanol byproduct)	MillerCoors Brewing Co. (through Merrick & Co.)	Very low ($0.30/gal; $2.97/1,000 gal)
Corn syrup	CARGILL	Low ($1.54/gal; $4.42/1,000 gal)
Molasses	Westway Supply Cattleman's Choice	Low ($1.39/gal; $5.87/1,000 gal)
Molasses:methanol mixture (70:30)	Westway Supply Cattleman's Choice	Low (~$2.54/gal; $7.95/1,000 gal)
Waste milk/whey		ND[d]
Ethylene glycol (food-grade)		ND
Methanol[e]	UNIVAR	Medium ($5.25/gal; $9.47/1,000 gal)
Ethanol		ND
Food-grade emulsified vegetable oil	Hepure Technologies	High ($29.00/gal; $29.16/1,000 gal)
MicroC™/MicroCG™ premium carbon sources	Environmental Operating Solutions	Low ($1.80-$2.00/gal; $6.16/1,000 gal)
Sodium citrate dihydrate[f]	To be determined	Low ($1/lb)
Hydrogen (technically not a "carbon" source, but grouped herein for convenience)	Generated on site/Praxair	ND

[a] Carbon sources that were retained for more detailed analysis are shaded.
[b] Cost provided per 1,000 gallons refers to the estimated cost of the liquid carbon source per 1,000 gallons of treated water, assuming a nitrate concentration of 600 mg/L.
[c] Effectiveness is being determined in ongoing batch tests and laboratory analysis of biological oxygen demand/chemical oxygen demand.
[d] ND (not determined)—Specific costs were not determined because these were rejected; see below.
[e] Rejected early but costs were developed for comparison because this is the industry standard for denitrification systems.
[f] Sodium citrate is not considered a primary carbon source but may provide a supplement to denitrification when used as an iron chelator, as discussed below.

Several carbon sources were eliminated from consideration as follows:

- Raw alcohols (methanol, ethanol, etc.) were eliminated because of the requirements associated with transport and storage. In addition, they are hazardous to work with and may be an attractive nuisance.

- Pure molasses was eliminated because of its viscosity when cold, and the molasses/methanol mixture was eliminated because availability may be inconsistent.

- Waste milk/whey was eliminated because the organic matter it contains is primarily composed of saturated fats and proteins, which are not as biologically available for denitrification as other sources.

- Ethylene glycol was eliminated due to its expense, its hazardous nature, and environmental concerns.

- Corn syrup was eliminated because of a need to maintain it at a warm temperature to keep it from separating.

- Hydrogen was eliminated because it is a highly combustible gas.

Liquid carbon sources retained for further consideration include the brewery waste products, vegetable oil, and MicroC™/ MicroCG™ products. Citrate was also retained, partly for use as a carbon source but mainly to chelate iron in effluent from the ZVI treatment cell, as discussed in Section 5. Emulsified vegetable oil was retained as a possible organic to be used to enhance the reactive media and/or to rejuvenate the present sawdust/ZVI media only. The reaction kinetics of the oil is likely to be too slow for it to be used as the sole carbon source in an inert media bioreactor.

6.3 *Reactive Media*

Reactive media provide both the solid matrix that supports the microbial biofilm and the organic carbon required to support bacterial denitrification. To address both needs, they often employ a combination of media that can provide structural integrity to minimize loss of permeability, and enough reactivity (i.e., labile carbon and nutrients) to fuel denitrification reactions. Solid reactive media initially considered are listed in Table 5.

Table 5
Reactive Media Options[a]

Material	Potential Source	Relative Cost
Walnut shells	Eco-Shell, Inc.	Medium (~ $162/yd^3)
Wood chips from pine-beetle kill	Contracted or purchased from stockpile in Breckenridge, CO	Low/ND
Sawdust	A1 Organics, Eaton, CO	Low/ND
Yard waste/wood chips	A-1 Composting, Hwy 93 Golden, CO	Low/ND[b]
Stockpiled, ground-up Christmas trees	City & County of Denver (early January of each year)	Low/ND
Sawdust/ZVI	A1 Organics, Eaton, CO; and Peerless Metal Powders & Abrasives	Sawdust/woodchips + ZVI - $1,000/ton or ~$2,442/yd^3
Hay/alfalfa	Local livestock supplier	Low/ND
Chitin	JRW	ND
Straw	Local livestock supplier	Low/ND

[a] Reactive media that were retained for more detailed analysis are shaded.
[b] ND (not determined)—Specific costs were not determined because these were rejected as discussed below.

Several reactive media alternatives were eliminated from consideration as follows:

- Wood chips from pine-beetle kill were eliminated because of the excessive haul distance from the western slope of Colorado. Furthermore, special handling may be required to avoid spreading the infestation to Front Range communities, and its long-term availability (over multiple decades) is uncertain.

- Sawdust as a standalone media was eliminated because of the expected decreased permeability over time and limited denitrification potential, as shown in earlier studies by the University of Waterloo. However, it was retained as a potential media mixture component to be commingled with other, higher-permeability materials.

- Yard waste/wood chips were eliminated because of uncertain product consistency. The composting facility accepts yard waste from a variety of sources in the Denver metropolitan area, and the product may include cellulosic materials of uncertain behavior in a treatment cell. Requiring a product of specific characteristics would increase costs.

- Stockpiled, ground-up Christmas trees were eliminated because of residual tinsel and other potential contaminants that might cause unforeseen problems.

- Hay/alfalfa was eliminated as a standalone reactive media because it lacks the structural integrity to resist compaction.

- Chitin was eliminated because it has been a source of undesirable ammonia in other water treatment applications.

- Straw was eliminated as a standalone reactive media because it lacks the structural integrity to resist compaction.

Mixtures of reactive media that survive the initial selection/screening process introduce a level of complexity that is a function of the number of components and the potentially complex chemical and physical reactions and interactions. Further complicating this comparison is the question of whether the multiple components should be installed in layers or commingled. In many cases, these alternatives are not represented by robust data in the literature, requiring assumptions to be made.

6.3.1 Enhanced Reactive Media

The sawdust/ZVI mixture currently used in the SPPTS is considered an "enhanced" reactive media in which the sawdust provides the carbon source used in Reactions 1 and 2 (Table 2) while the ZVI provides chemical-reducing power to fuel Reactions 3 through 8. An alternative to using a chemical reductant (e.g., ZVI) would be to enhance the reactivity of a solid reactive media by infusing the cellulosic material with a high-energy liquid organic amendment such as food-grade vegetable oil. In principle, a hydrophobic oil-based substrate is expected to partition to the solid organic phase provided by, for example, sawdust or walnut shell material and provide a high-energy, moderately reactive organic phase. A potential advantage of the organic amendment over ZVI to enhance the reactivity of the solid-phase organic is that the chemical oxidation of a reduced organic compound (e.g., vegetable oil) is well characterized, whereas reactions associated with ZVI are not.

As discussed in greater detail below, based on professional judgment gained from field and laboratory experience and a review of the current literature, none of the solid reactive media are expected to be able to support the required level of denitrification at the estimated loading rate and under the Site-specific conditions and constraints. Thus, only an enhanced reactive media was carried forward for further consideration.

7. Media Retained for Detailed Analysis

Several potential media and liquid carbon sources passed the initial screening and were evaluated in greater detail to select those to be tested in the Phase III pilot-scale testing program. The short list of options carried forward, along with likely advantages and disadvantages of each, is provided in Table 6.

Table 6
Analysis of Retained Media

Media Type	Media	Advantages	Disadvantages
Inert	Plastic random-packing media Tri-Pack®	Relatively high specific surface area (85 ft^2/ft^3) Lightweight (27 to 30 pounds/ft^3) High void volume (up to 90%) Industry standard Long expected lifespan	Higher initial cost Similar material failed to provide efficient treatment in previous pilot studies (see discussion in text)
	Pea gravel	Relatively high surface area (~101 ft^2/ft^3) Inexpensive Locally available Long expected lifespan	Lower void volume(~35% to 45%) with potential clogging (partial biofouling was observed in CSU studies after a short operational period) Failed to provide efficient treatment in previous testing (see discussion in text)
	Honeywell polyurethane foam blocks and plastic cylinders	High specific surface area Used in similar applications Long expected lifespan	Higher initial cost Lower void volume; foam may be prone to clogging, though this has not been a problem in other applications
Reactive (enhanced)	Walnut shells combined with food-grade vegetable oil	Available in numerous grades and sizes High carbon composition (60% to 80%) High hardness (Vickers No. 25–30)	Loses reactivity with time Untested for this application Higher initial cost Walnut shells considered appropriate only if enhanced with a more labile organic phase (e.g., vegetable oil)
	Sawdust/ZVI	Proven to be effective, when fresh, for low flow rates	Loses reactivity with time Not expected to be able to effectively treat higher flows and nitrate concentrations within present system volume Very expensive to replace
Carbon source	Liquid brewery wastes (waste beer, 2% to 3% ethanol)	Inexpensive Locally available	Relatively dilute; will require large storage tank and/or frequent deliveries
	Liquid brewery wastes (trub)	Inexpensive Locally available	Relatively dilute; will require large storage tank and/or frequent deliveries May continue to ferment; storage will need to be vented
	Liquid brewery wastes (BCS)	Inexpensive Sugary solution Locally available	Relatively dilute; will require large storage tank and/or frequent deliveries May continue to ferment; storage will need to be vented
	Liquid brewery wastes (15% ethanol byproduct)	Higher concentration of alcohol Relatively innocuous Inexpensive Locally available	May compete with other consumers of ethanol/energy-related products over longer term

Media Type	Media	Advantages	Disadvantages
	Food-grade emulsified vegetable oil[1]	NA	NA
	MicroC™/MicroCG™ premium carbon sources	Well characterized organic carbon source used extensively for denitrification Nonflammable substitute for methanol	Potentially high transportation costs Should perform similarly to other, locally-available materials (e.g., 15% ethanol brewery waste), though more efficiently than those materials
	Sodium citrate dihydrate[2]	NA	NA

[1] Not considered as a sole source of carbon, but as a possible organic amendment to rejuvenate current sawdust/ZVI media and/or to enhance walnut shell media. See text for additional discussion.
[2] Would not be used as a sole carbon source. May be added as an iron chelator, and would be available to bacteria as a minor contributing source of carbon.

Some of the media carried forward (e.g., brewery wastes) are not conventional media/carbon sources used for denitrification and therefore are not represented by a body of literature that can be used to predict actual performance. Consequently, in an effort to evaluate those media retained for detailed consideration but lacking data on composition or performance, bench-scale testing was conducted to provide reactivity data to support a final Phase III design. Attachment B provides details on the bench-scale testing. These tests were laboratory batch tests in which multiple samples of Rocky Flats water (from SPIN, the SPPTS influent location) were mixed with varying carbon sources and reactive media in various combinations and permutations. Several of the tests failed due to container breakage, as the carbon sources being tested developed gases that ruptured the containers. These tests are being repeated to complete the testing program and support final design of the Phase III pilot-scale tests.

More detailed contact and pricing information for these materials is provided in Attachment C.

8. Preferred Media

As noted above, the primary requirements for a reactive media is that it should be relatively permeable, inexpensive, and readily available (preferably locally), and have a sufficiently rigid cellulosic structure with a good supply of bioavailable carbon. The primary consideration for an inert media is that it should have a large specific surface area and high porosity (i.e., void volume) to maximize biofilm formation and resist clogging. These criteria, combined with professional judgment in the fields of microbiology and engineering, indicate that the preferred media for the Phase III pilot-scale testing at the SPPTS are:

- An enhanced reactive media consisting of walnut shells combined with food-grade vegetable oil; and

- An inert plastic random-packing media supplemented with a liquid brewery waste as the carbon source from the MillerCoors Brewing Co.

These media and carbon sources were retained for Phase III because they can support pilot-scale testing of two alternative treatment approaches that represent passive and semipassive systems (walnut shells and oil, and plastic random-packing media and liquid carbon, respectively). Reactive media that is not enhanced is not retained, for reasons that are described in the next section.

Walnut shells have been used in mining applications to treat acid rock drainage and have been shown to provide the following (Doshi 2006):

- A long-term carbon supply.
- Structural support that resists compaction.
- High total organic carbon.
- High specific surface area to maximize media contact with the water to be treated.

Emulsified vegetable oil has been used for *in situ* remediation of recalcitrant organic compounds, such as chlorinated solvents. Its advantage over organic compounds such as molasses is that it partitions to the organic phase in soils and can provide reducing power for several years. The combination of walnut shells and vegetable oil has the potential to provide the most effective and efficient passive treatment approach for the high-nitrate groundwater associated with the SPPTS. Additional testing will be performed to compare emulsified vs. non-emulsified vegetable oil for this application, since the former material represents a significantly higher cost than the latter, more readily-available variety.

Denitrification using an inert plastic support media for biofilm growth and an alcohol carbon source is the industry standard. Because of the high surface area of the media and high reactivity of the alcohol, such systems can provide efficient denitrification with a limited footprint. While this approach was previously evaluated in Site treatability studies and provided uncertain results (treatment was accomplished, but inefficiently, as discussed above), it is prudent to reevaluate the approach while considering the knowledge gained in the prior studies, given that this technology has proven successful elsewhere and is the standard treatment approach in many industrial applications.

The carbon source to be used in the Phase III inert media testing is selected based on a series of bench tests (see Appendix B); while those tests concluded, container breakage due to internal pressure buildup (the brewery wastes apparently continued to ferment) have necessitated several be repeated. Initial results suggest the BCS alternative to be preferred, but several other factors (e.g., the BCS is a sugary syrup that apparently continues to ferment, which poses storage and metering concerns as well as questions related to its “shelf life”) suggest the 15% ethanol brewery waste may be a better choice. This determination will be refined through the conclusion of bench testing, but both materials may be used in the Phase III evaluation. For the purpose of discussion, calculations and performance predictions are based on the 15% ethanol solution.

9. Factors Bearing on the Phase IV Full-Scale Nitrate Treatment Design

Design of the Phase III pilot-scale testing must consider the conceptual feasibility of implementation in the full-scale Phase IV treatment system. Obviously, it would not be

productive to pilot-test a treatment concept that could produce acceptable water quality at a reasonable cost but would not be feasible or acceptable from a constructability or operational perspective.

Three conceptual Phase IV designs were developed to facilitate making an informed decision on which is the most practical treatment method. The three conceptual treatment methods considered incorporate:

- Reactive media;
- Enhanced reactive media; and
- Inert media fed with a liquid carbon source.

Descriptions and discussions of the respective conceptual systems are provided below. Depending on the results of Phase III pilot-scale testing and how they might be implemented in a full-scale design, consideration will be made as to whether it would be beneficial to incorporate the facilities used for the Phase III effort into the final Phase IV system design.

9.1 *Reactive Media Conceptual Design*

Loading calculations suggest that a full-scale Phase IV system using a solid cellulosic reactive media would require approximately 3,700 yd^3 of media to provide adequate treatment of groundwater containing 600 mg/L of nitrate at an average flow of 3 gpm. This calculation is based on the assumption that the reactive media is composed of an organic material with the chemical formula of $C_{106}H_{263}O_{110}P$, and further assumes 10% available organic carbon and a target 10-year lifespan. For comparison, the current SPPTS structure has an available volume of approximately 319 yd^3 in Cell 1. If the entire current structure (both cells) was filled with a reactive media to a depth of 20 ft, that would provide approximately 756 yd^3 of treatment media. Consequently, calculations indicate that a simple reactive-media system approximately 5 times larger than the current SPPTS structure would be required to treat the expected flows.

A conceptual design accommodating this volume of media, consisting of a single treatment cell with dimensions of 50 ft wide by 175 ft long by 8 ft deep, would cover an area of approximately 0.2 acre. This cell would need to be newly constructed, as nothing of this size currently exists at the Site.

The media would need to be exhumed and replaced approximately every 10 years, assuming a constant rate of organic degradation with no flow short-circuiting. At that time, any cover topsoil and insulating material would be removed for reuse, and the spent media would be excavated and disposed of off site in a sanitary landfill, or composted and used on site if appropriate.

Given the large volume of media that would be required and the resulting dimensions of the treatment cell (i.e., 0.2 acre), combined with the potential need to replace the media approximately every 10 years, the reactive media alternative is not recommended for Phase III pilot-scale testing or for Phase IV full-scale implementation.

9.2 *Enhanced Reactive Media Conceptual Design*

The existing SPPTS Cell 1 sawdust/ZVI media is essentially an enhanced reactive media, with the ZVI providing inorganic reducing power for denitrification. As discussed earlier, studies to support the engineering design of the current SPPTS bioreactor were conducted by the University of Waterloo. Those studies used a solution that contained varying concentrations of nitrate averaging approximately 30 mg/L nitrate, and provided for an HRT of 3 days. Using the sawdust/ZVI mixture, the Waterloo researchers were able to remove approximately 60% of the nitrate. At the flow rate used herein as a hypothetical annual average (3 gpm), the current SPPTS system would provide an HRT of approximately 3.6 days (assuming plug flow), which is similar to the HRT used in the Waterloo studies. However, the nitrate concentration in the influent is approximately 20 times greater than that used in the Waterloo studies, and reducing the nitrate concentration from 600 mg/L nitrate to less than 10 mg/L requires a removal efficiency of greater than 98%. While the sawdust/ZVI mixture was effective under low-flow conditions, with the higher flows and loading that have resulted from Phase I implementation, continued use of the sawdust/ZVI media would require that the SPPTS Cell 1 volume be expanded significantly. Based on the effectiveness reported in Waterloo studies, the volume of Cell 1 would probably need to be increased by a factor of at least 5 to provide adequate treatment if a sawdust/ZVI media was used.

An alternative enhanced reactive media approach entails impregnating a cellulosic media (e.g., walnut shells) with a biologically available organic phase, such as an emulsified food-grade vegetable oil. With this approach, the cellulosic material would provide the required permeability, porosity, and structural support for the bacteria, while the emulsified oil would provide a higher-quality, energetic, and more readily-available carbon source to circumvent the rate-limiting cellulose degradation reaction. The cellulosic material would also function as a reserve of carbon, providing limited treatment even after the available higher-quality carbon has been consumed, and might be appropriate for rejuvenation through the injection of additional emulsified oil.

The most significant difference between a reactive-media enhancement that is *organic* (e.g., vegetable oil as proposed for Phase III testing) versus *inorganic* (e.g., ZVI, which is currently in use at the SPPTS) is that reactions involving biological oxidation of an oil substrate coupled to denitrification are very well understood, whereas the possible reaction pathways for denitrification provided by ZVI (shown in Table 2) are hypothetical and not well understood.

While walnut shells and emulsified vegetable oil have been used and tested separately in various remedial programs, a treatment approach in which they have been combined, to the authors' knowledge, has not been previously evaluated. Therefore, the volume requirements for this application are not known, though potentially the volume of the existing SPPTS structure would be sufficient. Tests need to be conducted to evaluate specific reaction kinetics and media volume requirements of this media mixture. Because this combination of a solid reactive media and a high-energy liquid carbon source offers the potential to provide the most passive treatment approach, inclusion in the Phase III pilot-scale testing is recommended.

9.3 *Inert Media Conceptual Design*

As discussed above, the concept of an inert substrate with a liquid carbon source added to support bacterial denitrification was explored via treatability studies performed by CSU. Those studies suffered from design flaws. By increasing the scale of the study vessels, as will be done for Phase III, it is expected that some of the design challenges (inoculum distribution and flow distribution) will be resolved. Using a carbon source that is not considered hazardous will address most of the logistical issues, with delivery of the material remaining as the most important item to resolve.

For a full-scale, Phase IV nitrate treatment cell, a hypothetical 3 gpm flow at 600 mg/L of nitrate results in a nitrogen load to the system of 9.8 kilograms of nitrogen per day (22 pounds per day). Treating this load would require approximately 43 gallons per day (about 2 gallons per hour, and 16,000 gallons per year) of the 15% ethanol brewery waste as the carbon source. Based on current literature and experience, it is anticipated that the volume requirements of such a system would be met by the existing SPPTS concrete structure, but this will be further refined during the Phase III pilot-scale testing.

This system would require construction of a storage facility for the liquid carbon source; for discussion purposes, a 10,000-gallon buried tank is envisioned. (Many different configurations of 10,000-gallon tanks are available. Cylindrical fiberglass tanks of this volume are available, and measure approximately 8.5 ft in diameter and 27.5 ft long; plastic ones are about 12 ft in diameter and 13 ft long.) The liquid carbon source would be automatically trickle-fed, using a solar-powered pump, to the nitrate cell influent (i.e., the uranium cell effluent) at a rate that would be proportional to the flow rate. The pump would be connected to existing telemetry to support monitoring and notification of any malfunction. The tank could also be fitted with a low-level alarm.

Full-scale implementation would require that this tank be refilled as necessary; the preceding calculations (again, based on 3 gpm/600 mg/L nitrate) indicate this would be required approximately every 6 to 8 months. The cost of the MillerCoors brewery 15% ethanol byproduct is approximately $0.30 per gallon, or about $5,000 annually. There are multiple breweries or other potential suppliers in the Colorado Front Range area that could provide this product, or a similar liquid could be custom-blended by a raw ethanol supplier. It is unlikely that the inert media would require replacement, because its very high porosity (70% to 90% void volume) should be able to support more than enough biofilm development without causing flow restrictions. Periodic system backflushing to remove sludge, and subsequent sludge disposal, may be required. Pilot tests will help predict this potential maintenance requirement.

10. Phase III Pilot-Scale Testing Design

Based on available literature and the limitations imposed by the Rocky Flats Site, there are two treatment approaches that warrant pilot-scale testing as a potential long-term treatment option:

- Using enhanced reactive media; and
- Using inert media.

As discussed above, due to the large estimated volume required for a reactive media system (i.e., without media enhancement) and the difficulty in predicting long-term reactivity of these systems, this approach does not appear to be the most appropriate for this application. It is believed, based on literature reviews and experience, that a system employing a simple solid reactive media cannot be successful given the current and expected nitrate loading, unless the size (volume) of the current treatment system is expanded significantly.

In contrast, an enhanced reactive media has the potential to meet the goals of the treatment system with a more passive approach and could potentially be housed within the current structure, though that must be confirmed via the Phase III tests. Although somewhat less passive, denitrification using inert media and a liquid carbon source is the industry standard for nitrate removal, and also has the potential to meet treatment goals. The Phase III pilot-scale testing program will therefore test these two treatment concepts.

A discussion of the preliminary design for the Phase III pilot-scale system is provided below. It should be reiterated that the infrastructure used for the pilot-scale tests may be used in the future to augment the full-scale treatment system or support modular treatment designs.

10.1 *Uranium Removal Cell*

Any water entering the full-scale (Phase IV) nitrate treatment system will have been pretreated via the Phase II uranium treatment cell to remove uranium. Thus, to properly test the efficiency of the Phase III pilot-scale process, water fed through the Phase III pilot-scale system will be similarly preconditioned. The Phase II treatment cell will contain ZVI as its treatment media. Corrosion of the ZVI causes dissolution of up to 100 mg/L of iron (and concomitant uranium removal as a solid precipitate); dissolved iron will therefore be present in the Phase II cell effluent. A portion of this effluent water will be conveyed to the Phase III nitrate-removal system. The dissolved iron in this water readily forms iron oxides and, left unabated, is likely to produce significant scale in the conveyance piping and plugging at the inlet of the Phase III media cells.

Laboratory testing indicates that the addition of food-grade citrate will prevent scale and plugging by chelating the dissolved iron, maintaining it in solution. Also, citrate is a carbon source that will augment the sources of carbon tested in Phase III.

Design of the Phase III system incorporates the addition of citrate to address dissolved iron in the influent water, with the chelated iron then deposited (e.g., as precipitates) throughout the nitrate treatment cell rather than being concentrated at the point of entry, or exiting the system within the effluent. The potential for citrate to be present in system effluent should be discussed with the regulators to confirm it will be acceptable. Although omission of the citrate additive will not have a strong adverse impact on testing nitrate removal, including this additive should reduce system maintenance and extend the life of the media, and therefore it should not be eliminated from the Phase III design unless regulatory approval cannot be gained.

10.2 *Nitrate Removal Cells*

It is recommended that two parallel tests be conducted to validate the selected treatment approaches and provide the required information on kinetics and HRT to be used for full-scale design in Phase IV. Bench-scale testing of possible liquid carbon sources has been conducted, but as previously noted, several tests were not completed due to vessel breakage; these tests were redesigned and are being completed. The pilot-scale testing program described below may therefore be revised somewhat to incorporate these final bench-scale tests.

Pilot testing of the preferred treatment approaches will be conducted in two approximately 1,000-gallon subsurface concrete treatment cells installed downgradient from the (Phase II) uranium treatment cell scheduled to be installed in March 2009. One cell will contain an enhanced reactive media consisting of walnut shells combined with food-grade vegetable oil. The second cell will contain an inert media consisting of the Honeywell polyurethane foam blocks and plastic cylinders, and supplemented with a 15% ethanol solution from the MillerCoors brewery (or other suitable organic carbon source pending final results of bench-scale testing and analysis).

Both treatment systems will be configured and plumbed to operate in an upflow mode while receiving effluent from the uranium treatment cell via a gravity flow. However, depending on the final location and design, one or more small, solar-powered pumps may be required to overcome head loss. Influent rates will vary as biofilms evolve in each system; once steady-state conditions have been established, flow will be continually increased until breakthrough is observed and a minimal HRT can be determined.

The enhanced reactive media cell will be operated as a passive system and will only require that inflow be delivered from the uranium treatment cell. The inert media cell will require additional pumps: one to deliver the 15% ethanol solution, and a second pump to provide for recirculation of water within the reactor, perhaps only during startup. All pumps are envisioned as being solar-powered.

The effluent from these units will be returned to the existing SPPTS via a buried 4-inch-diameter common drain pipe. Note that this may improve current treatment within the SPPTS, given that any excess carbon (i.e., unconsumed liquid carbon and/or entrained vegetable oil) will be routed through the existing sawdust/ZVI media in Cell 1, potentially stimulating resident bacteria and increasing denitrification. It should also be noted that use of a liquid carbon source should be evaluated for regulatory approval needs.

10.3 *Phase III Pilot-Scale Design Summary*

The Phase III pilot-scale testing facility will incorporate two buried 1,000-gallon tanks (measuring approximately 5 ft by 6 ft by 8 ft), one buried storage tank for the liquid carbon source and one for citrate, dosing apparatus for citrate (influent to both tanks) and the liquid carbon source (inert media only), appropriate solar power to supply dosing and pumping needs, and the necessary plumbing to support operation and monitoring. A conceptual sketch of the Phase III pilot-scale system layout is provided below.

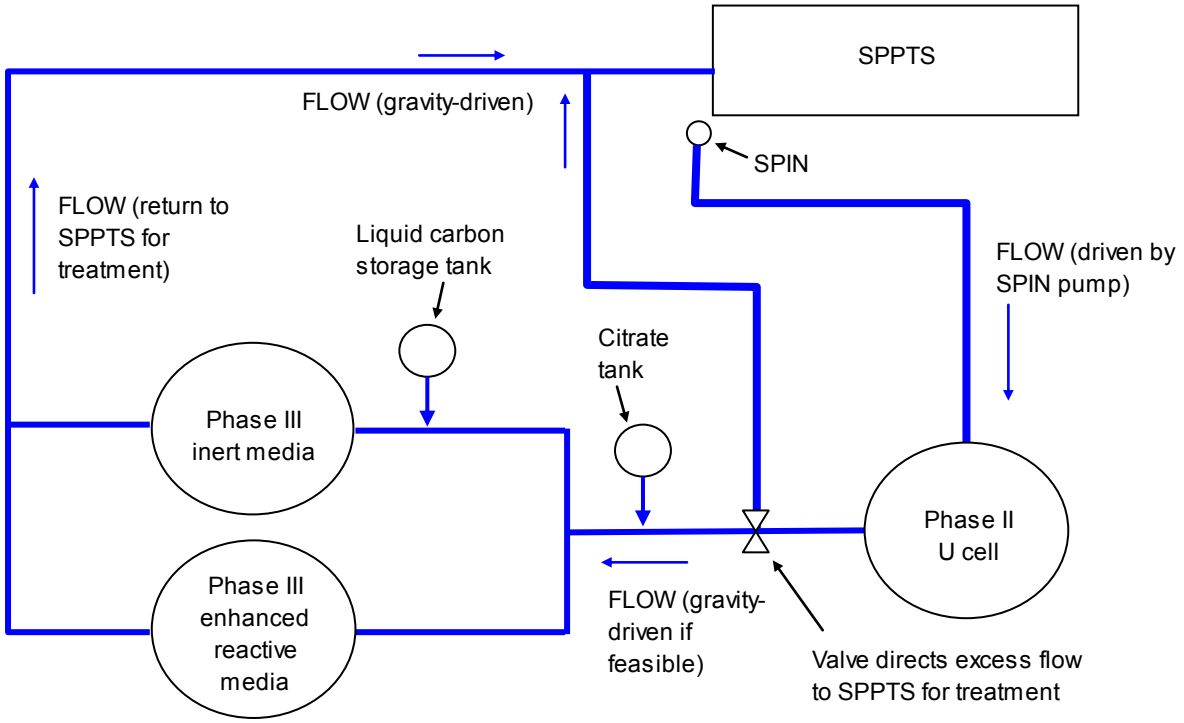

Conceptual Drawing -- Not to Scale

11 Recommendations

Based on the information provided above, it is recommended that Phase III pilot-scale tests be conducted to validate the selected treatment approaches and provide the information on kinetics and HRT required for full-scale design. It is recommended that pilot testing of the preferred treatment approaches be conducted in two treatment cells: one filled with an enhanced reactive media consisting of walnut shells combined with food-grade vegetable oil, and the other filled with an inert media and supplemented with a brewery waste (e.g., 15% ethanol solution) from the MillerCoors brewery.

Performance data from the Phase III effort should be collected over the full range of seasons and across a fairly broad range of flow regimes to confirm the suitability and performance of these media and treatment approaches while also determining design specifications for a full-scale nitrate treatment system. Construction of the full-scale system will be the objective of Phase IV.

In addition to the concepts being evaluated through the Phase III pilot-scale tests, several issues should be evaluated in greater detail from an environmental compliance perspective and

discussed with the regulators to ensure their acceptance. Sodium citrate will be added as a chelating agent for the dissolved iron exiting the Phase II uranium treatment cell, and may remain at very low concentrations in the effluent from the SPPTS. A liquid carbon source will be added to one Phase III pilot cell, and may be present at very low concentrations in SPPTS effluent. The vegetable oil used to enhance the walnut shell media in the other Phase III pilot cell may also be present at very low concentrations in the SPPTS effluent. These substances are not currently used at the SPPTS.

In addition to the Phase III recommendations, the following additional tasks are recommended to determine short-term improvements to the current SPPTS system in order to meet discharge objectives under the current higher nitrate-loading conditions:

- Conduct tracer tests on the SPPTS to determine if short circuiting or loss of media reactivity is the primary cause for poor system performance;

- Conduct laboratory testing to evaluate the potential to amend the existing sawdust/ZVI media with a liquid organic compound, over the short term, to improve nitrate removal until a new full-scale system can be designed and installed in Phase IV.

Each of these two activities will also require more detailed evaluation from an environmental compliance perspective; as noted in Attachment A, tracer tests performed in the state of Utah required permitting.

12. References

DOE (U.S. Department of Energy), 1999. *Solar Ponds Plume Decision Document*.

DOE (U.S. Department of Energy), 2008. *Dispersivity Testing of Zero-Valent Iron Treatment Cells: Monticello, Utah, November 2005 Through February 2008*.

Doshi, S.M., 2006. *Bioremediation of Acid Mine Drainage Using Sulfate-Reducing Bacteria*. U.S. Environmental Protection Agency, Washington, D.C.

University of Waterloo, 1999. *Removal of Dissolved Uranium and Nitrate from Groundwater Using Reactive Materials: Laboratory Column Treatability Tests*. University of Waterloo Department of Earth Sciences, Waterloo Ontario, N2L 3G1.

Attachment A
Effectiveness of Current System and Rejuvenation of Existing Media

The focus of this document is to define the appropriate nitrate treatment media for Phase III pilot-scale testing, with the goal of eventual full-scale implementation via Phase IV. However, as shown in Table A-1, current system effluent water quality conditions suggest a short-term action is warranted to improve treatment efficiency until the construction of Phase IV is complete.

Table A-1
Example Results for Nitrate and Uranium in SPPTS Influent and Effluent Before (Validated Data) and After (Unvalidated Data) the Phase I Upgrades (Completed in October 2008)

Date	Nitrate/Nitrite as Nitrogen (mg/L)		Uranium (ug/L)		Approximate Average Flow Rate (gpm)
	Influent	Effluent[a]	Influent	Effluent[a]	
11/7/07	220	0.14	53	0.49	0.5
5/19/08	363	0.12 (J)	44.6	0.69	0.4
10/22/08	561.4	116.7	56.3	14.7	1.4
11/17/08	572.2	348.3	48.2	16.2	1.1
11/24/08	637.2	357.1	58.4	14.8	0.8
12/2/08	646.3	421	50.3	13.9	0.8

[a]Approval to formally change the system effluent monitoring point from the metering manhole (SPPMM01) to the new discharge line (SPOUT) was received on 11/20/08. Results shown for dates prior to 11/20/08 represent SPPMM01, and results for later dates represent SPOUT (concentrations at the two locations are very similar).
(J) Result was J-qualified, indicating it is estimated.
gpm = gallons per minute
mg/L = milligrams per liter
ug/L = micrograms per liter

Results at surface water performance location GS13 also show increasing concentrations, with nitrate concentrations (nitrate/nitrite as nitrogen) exceeding the Temporary Modification of 100 mg/L nitrate on two recent sampling dates.

There are at least two possible reasons why the system is not performing at the required level to acceptably remove nitrate and uranium:

1) Short-circuiting may be occurring and thereby reducing the effective hydraulic retention time (HRT); and/or

2) The sawdust/zero-valent iron (ZVI) media may have lost much of its reactivity and is not supplying enough reducing equivalents to effectively treat the additional nitrate loading.

If the loss of media reactivity is the most significant factor affecting the removal of nitrate, it may be possible to enhance the performance by amending (or "rejuvenating") the current media with a reactive liquid organic compound, such as emulsified food-grade vegetable oil or carbohydrate to enhance system performance over the short term until the Phase IV system retrofit/replacement is completed. Rejuvenating the existing media through the addition of biologically-accessible carbon may be the most cost-efficient and effective method to improve treatment efficiency over the short term. The existing sawdust, while still comprised of carbon, contains significantly less *bioavailable* carbon to support denitrifying bacteria than it did when fresh, and it is this carbon that supports denitrifying bacteria.

(Note: If it is determined that the primary reason for the increasing concentrations of nitrate in system effluent is short circuiting in Cell 1, rejuvenating the sawdust/ZVI media may have little or no effect on effluent concentrations. Consideration of how best to respond to short circuiting conditions will then be appropriate. Short circuiting in the uranium treatment cell is not of great importance, since that cell's function will be replaced in the spring of 2009 when Phase II is constructed.)

Conceptually, rejuvenating the existing media would entail installing temporary injection wells into the treatment cell using a direct-push drill rig. The wells would have slotted screens at the deepest 10-foot section. A suitable liquid organic compound would then be injected through the wells to enhance the reactivity of the media. This approach relies on the effective partitioning of the injected organic to the solid organic phase so that it is not immediately flushed through the media. Bench-scale testing should be conducted prior to implementing such an approach, and the need for regulatory approval should be evaluated and acted upon as necessary.

Step 1: Proposed Tracer Test for Existing SPPTS

Introduction

The existing sawdust/ZVI media has been in place for many years and during this time biotic (e.g., formation of biofilm and/or consumption of cellulose) and abiotic (e.g., gas generation and iron oxide precipitation from ZVI corrosion) reactions may have produced areas within the media that are not being contacted by groundwater flow. Alteration of the media in this way causes preferential flow (short circuiting) and reduces the capability of the media to treat water. Tracer tests are routinely used to determine flow and dispersion characteristics of flow-through media.

Monitoring results indicate that efficiency of the SPPTS has been decreasing and consequently effluent nitrate concentrations currently exceed project goals. For the rejuvenation effort to be effective, the contaminated water must make adequate contact with the sawdust-based biomedia. If preferential flow paths have developed within or around the media, efficiency could be significantly reduced. Piston-type flow, where the water passes through the media without significant preferential flow and minimal dispersivity, is ideal for maximizing biotreatment.

To help determine the ability of the media to maintain quasi-piston-type flow, a tracer test is proposed. With ideal piston flow, an injected tracer should exit the treatment system after the passing of one pore volume in the same concentration as the injectate. Ideal conditions are seldom, if ever, achieved. When effluent tracer concentrations are observed well before the passing of one pore volume, preferential flow or high dispersion is indicated. A temporal plot of effluent tracer concentration can be used to indicate preferential flow and measure dispersion within the media. These data can then be used to make informed decisions about media rejuvenation versus the need for media replacement or system reengineering.

Tracer Test Plan

Important criteria in selecting a tracer include:

- Easy to analyze accurately;
- Detectable at low concentrations;
- Environmentally acceptable and can be permitted easily;
- Inexpensive;
- Few safety, handling, and management issues;
- Non-reactive (does not adsorb or degrade) with the media or constituents in the water; and
- Will not affect flow dynamics (e.g., does not produce high-density solution).

A valid tracer test includes several important steps:

- Inject a sufficient mass of tracer to enable observation of breakthrough;

- Inject the tracer over a sufficient length of time; and

- Inject a sufficient concentration of tracer for accurate detection, while still low enough to not influence flow dynamics.

Dissolved bromide meets most of the above requirements for a suitable tracer and has a proven track record. Bromide has been shown not to react with ZVI and, being inorganic and hydrophyllic, is not likely to react significantly with the biomedia. Many tracer tests have been conducted using bromide and DOE-LM has substantial in-house experience with its use. Therefore, bromide is proposed for the tracer test. Although bromide can be measured in the field using an ion-selective electrode, interferences and temperature variation make this method unsuitable. Ion chromatography (IC) is a more accurate method and is less prone to interference. Experience with bromide tracer tests at the DOE-LM Monticello, Utah, treatment cells indicates that a dissolved bromide concentration of 200 mg/L is sufficient to measure breakthrough and does not cause density effects.

The SPPTS is currently operating at an average daily flow rate of approximately 0.8 gpm. At this flow rate, the calculated HRT in the sawdust/ZVI cell is approximately 14 days and that in the gravel/ZVI cell (used to treat uranium) is approximately 5 days, for a total calculated HRT of 19 days. Ideally, one full pore volume of tracer would be injected. Pore volumes of the

sawdust/ZVI and gravel/ZVI cells are approximately 18,000 and 6,000 gallons, respectively. Since the tracer test is mainly focused on the properties of the sawdust/ZVI media, one pore volume of this cell (18,000 gallons) will be injected. This is not to say that a tanker-truck of bromide solution will be used. Instead, a solution of 100 grams per liter (g/L) bromide will serve as the "parent" solution, and will be injected into the SPIN water stream at a rate that will produce influent water containing 200 mg/L bromide. A steady 0.8 gpm (3 liters per minute) flow rate requires injection of 6 mL per minute of the parent solution to produce the target 200 mg/L bromide concentration. A total of 15 kilograms (33 pounds) of sodium bromide (available in 50-pound bags, costing approximately $100) is needed, and will be mixed with approximately 39 gallons of distilled or deionized water to create the 150 liters of parent solution required for this study. (Note that flow into the SPPTS is actually pulsed, not uniform at 0.8 gpm; the injection of tracer solution will be automatic and flow-dependent, with the same parent and target influent concentrations as described above.)

The parent will be injected directly into the influent (SPIN line) in the adjacent valve vault. The amount of parent solution injected will be metered regularly by observing the level in a metered vessel to ensure proper operation of the injection pump. Generally, a piston pump is preferred for the injection so that the injectate can be pumped accurately against the pressure of the influent line. However, the very low pressure of the influent line at the SPPTS should permit use of most other types of pumps, including peristaltic. If none of the pumps currently available at the Site prove to be satisfactory, a solar-powered pump will need to be procured for this application. The amount of parent solution injected will be metered regularly by observing the level in a metered vessel to ensure proper operation of the injection pump. After 14 days of injection, the injection pumping will be discontinued, but sampling will continue.

Samples will be collected at two locations: (1) from the riser on the effluent line of the sawdust/ZVI cell, and (2) from the riser on the effluent line of the gravel/ZVI cell. Samples will be automatically collected twice daily (including weekends). Samples will also be collected occasionally from the system influent riser to ensure that the influent bromide concentration is near 200 mg/L, and from SPOUT to determine if there is any unexpected bypass of the entire system. Samples will be placed in 50-milliliter sampling tubes and analyzed for bromide by IC.

Tracer tests at the Monticello site indicated that approximately 3 pore volumes were sufficient to produce well-defined breakthrough curves. Therefore, sampling and analysis will continue for approximately 6 weeks to include the tails of the breakthrough curve; however, if sudden breakthrough occurs sampling may be terminated early.

Bromide breakthrough curves will be plotted and compared to modeled curves using varied dispersivity values. This method was effective in determining dispersion characteristics of the treatment media in the Monticello cells (DOE 2008). These interpretive methods ensure reasonable determination of the condition of the existing SPPTS treatment media for future use, either as-is or in some rejuvenated form (e.g., via addition of a carbon source).

Consultation under the Rocky Flats Legacy Management Agreement regarding any regulatory approval needed for injection of the tracer and subsequent discharge from the SPPTS will be

conducted. Regulatory approval, if any is required, is assumed to take at least several weeks to obtain.

Step 2: Media Rejuvenation

If results of the tracer test are positive and indicate groundwater flow makes good contact with the media (i.e., closer to ideal piston flow than preferential flow), media rejuvenation would be appropriate and is recommended. A discussion of media rejuvenation is presented above.

References

DOE (U.S. Department of Energy), 2008. *Dispersivity Testing of Zero-Valent Iron Treatment Cells: Monticello, Utah, November 2005 Through February 2008*.

Attachment B
Denitrification Bench-Scale Testing Protocol

Bench-scale tests to evaluate the effectiveness of various media at denitrification were conducted in 40-milliliter (mL) glass volatile organic analysis (VOA) vials. Three separate vials containing the same constituents were used for each test. The mass of the carbon source was determined by weighing the vial with and without its contents and the volume of carbon was determined by pipetting. Based on estimates of carbon usage and an assumed 3 gpm system flow rate, approximately 60 uL of ethanol was needed for each 40-mL test. As discussed in the Media Evaluation section above, brewery wastes were determined to be the best candidates for use in the Phase III pilot testing. MillerCoors Brewing Co., a local source for these products, provided samples of four different extracts that were used in the bench-scale testing (in these tests, referred to as Beer 1, 2, 3, and 4). Assuming these are approximately 25% as effective as pure ethanol, approximately 240 uL of beer extract was required for each test. Pure ethanol and an emulsified vegetable oil were also tested. Citrate (50 grams per liter [g/L] sodium citrate dihydrate) is being considered as a chelating agent for dissolved iron coming from the zero-valent iron (ZVI) reactor. Since citrate can also be utilized by microorganisms, it was included in these bench tests. Recent tests conducted to support the SPPTS Phase II effort indicated that approximately 100 uL of the citrate solution in 40 mL of Rocky Flats water is sufficient to chelate all the dissolved iron coming from a ZVI column.

The following tests were conducted initially:

Beer1	Beer2	Beer3	Beer4	Ethanol	Veg. Oil	Citrate
100 uL	100 uL	100 uL	100 uL	50 uL	100 uL	100 uL
200 uL	200 uL	200 uL	200 uL	100 uL	200 uL	200 uL
500 uL	500 uL	500 uL	500 uL	200 uL	500 uL	500 uL
				500 uL		

The mass of the carbon source was determined by weighing the vial with and without the carbon source and volume was determined by pipetting. Carbon sources containing suspended solids were allowed to settle and the test sample (100 to 500 microliters [uL]) was collected from the liquid portion (to avoid significant solids given that the solids would be difficult to pump in a field setting). An accurately weighed quantity (approximately 2 grams) of inoculum (soil collected from the SPP Discharge Gallery) were added to each vial. The vial was then filled to volume (no head space) with SPIN water and weighed again to determine the amount of SPIN water. Samples were then incubated at a temperature slightly above room temperature (30 degrees Celsius) and gently agitated by hand approximately daily. The higher temperature should accelerate reactions so that effects can be seen sooner.

Each test was sampled three times and each vial was sacrificial. In other words, three separate vials containing the same constituents were used for each test. This method eliminated any effects of atmospheric exposure and provided sufficient sample for analysis. Samples were collected from one set of vials after 1 week. Additional vials were sampled at later times depending on the results of the first set (at approximately 2 and 3 weeks). Each vial was

sampled separately with a pipet after being centrifuged or settled to remove solids. Proper dilutions were prepared and remaining nitrate concentrations were analyzed by ion chromatography (IC). Uranium was also analyzed on another split by laser-induced kinetic phosphorescence analysis (KPA). Oxidation reduction potential (ORP) and pH were measured in the opened vials using electrodes.

Controls were run using no inoculum or carbon source, using inoculum without the carbon source, and using the carbon source (500 uL for each carbon source) without inoculum. Duplicates were run on several samples for quality assurance.

Attachment C
Source and Price Information for Media Considered

Media Description	Contacted Company	Contact Person	Phone No./E-Mail	Unit Price
Plastic random-packing	Jaeger Products	Scott Gagliardi	(800) 678-0345 jmcevoy@jaeger.com	$22.50/ft^3 ($607.50/yd^3)
Pea gravel	Santa Fe Sand & Gravel	NA	720-903-8096	$40.63/yd^3
Honeywell polyurethane foam blocks and plastic cylinders	Honeywell	Bill Sheridan, John Irvin	847-736-9573 william.sheridan@honeywell.com; 303-987-6159, john.irvin@ honeywell.com	$20/yd^3
Walnut shells	ECO-Shell, Inc.	Rebecca Crowder	530-824-8794 rebecca@ecoshell.com	$200/ton (~$108/yd^3)
Sawdust/ZVI	A1 Organics, Eaton, CO Peerless Metal Powders & Abrasives	NA	970-454-3492 313-841-5400	$12.07/ yd^3 $1,000/ton (~$2,430/yd^3)
Liquid brewery waste – Three potential byproducts from brewery, one from outside source	MillerCoors Brewing Co., Golden, CO	Rick Paine, Spent Matls/Co-Products Mgr.	303-618-4122 rick.paine@coors.com	Waste beer $0.08/gal BCS $0.06/gal trub $0.06/gal
15% ethanol brewery waste	Merrick & Co.	Steve Wagner	303-353-3592 steve.wagner@ merrick.com	$0.30/gal
H60 Emulsified vegetable oil substrate (EVOS™)	Hepure Technologies Inc.	John Poulson	(732) 296-6652; john.poulson@hepure.com	$29.00/gal
MicroC/Micro CG™	Environmental Operating Solutions	Samuel Ledwell	508-743-8440 sledwell@ eosenvironmental.com	$1.80-$2.00/gal